S6161-LR-FSE-010

0910-LP-527-3200

OPERATION AND SERVICE MANUAL

FOR

SHIPBOARD ELECTRIC GRIDDLES

MODEL NUMBERS: LG24M, LG36M, LG48, LG72, MDI-36, MDI-48, AND MDI-72

LANG MANUFACTURING COMPANY

6500 MERRILL CREEK PARKWAY

EVERETT, WA 98203

DISTRIBUTION STATEMENT

THIS PUBLICATION IS REQUIRED FOR OFFICIAL USE OR FOR ADMINISTRATIVE OR OPERATIONAL PURPOSES. DISTRIBUTION IS LIMITED TO U.S. GOVERNMENT AGENCIES ONLY. OTHER REQUESTS FOR THIS DOCUMENT MUST BE REFERRED TO COMMANDER, NAVAL SEA SYSTEMS COMMAND, SEA 09, WASHINGTON, DC 20362

SUPERCEDURE NOTICE

CANCELS AND SUPERCEDES S6161-LR-FSE-010
DATED FEBRUARY 1989
AND ALL CHANGES THERETO

MANUAL SUPPLEMENT FOR MARINE EQUIPMENT

THIS EQUIPMENT IS APPROVED FOR INSTALLATION ONLY ON VESSELS GREATER THAN 65 FEET IN LENGTH IN ACCORDANCE WITH USCG REGULATIONS IN TITLE 46 CFR 110-113.

ANY WIRING USED IN THE INSTALLATION OF THIS APPLIANCE MUST BE STRANDED COPPER.

IDENTIFYING TECHNICAL PUBLICATION SHEET

1. IDENTIFICATION DATA:
2. PURPOSE: THIS TECHNICAL PUBLICATION IS ISSUED FOR THE PURPOSE OF IDENTIFYING AN AUTHORIZED TECHNICAL MANUAL FOR NAVY USE AND FOR PROVIDING SUPPLEMENTAL TECHNICAL INFORMATION.
   A. MANUFACTURER: LANG MFG. CO.
   B. CONTRACT NUMBER: _____
   C. EQUIPMENT: GRIDDLE, SELF HEATING, ELECTRIC
   D. REQUISITION NUMBER: NOT REFERENCED
   E. NATIONAL STOCK NUMBER (NSN): _____
   F. TITLE: MAINTENANCE MANUAL FOR GRIDDLE, SELF HEATING, ELECTRIC
   G. DATE OF PUBLICATION: MARCH 2002
   H. PREPARING ACTIVITY: DEFENSE GENERAL SUPPLY CENTER
   I. APPLICABLE TMCR NUMBER: 860172
   J. EXTENT OF PROPOSED SUPPLEMENTAL DATA (10% MAXIMUM): 1%
   K. LIST OF TECHNICAL MANUAL FOR THIS EQUIPMENT PROCURED UNDER ANOTHER CONTACT:
3. ADDITIONAL COPIES: ADDITIONAL COPIES ARE AVAILABLE FROM:

NAVAL PUBLICATION AND FORMS CENTER
5801 TABOR AVENUE
PHILADELPHIA, PA 19120-5099

4. COVER: THE TECHNICAL MANUAL OUTSIDE COVER SHALL CONTAIN THE FOLLOWING STATEMENTS:

PUBLISHED BY DIRECTION OF COMMANDER, NAVAL SEA SYSTEMS COMMAND

S6161-LR-FSE-010
0910-LP-527-3200

APPROVAL AND PROCUREMENT RECORD

APPROVAL DATA FOR: GRIDDLE, SELF-HEATING, ELECTRIC

TITLE OF MANUAL: MAINTENANCE MANUAL FOR: GRIDDLE, SELF-HEATING, ELECTRIC

APPROVAL AUTHORITY: NAVAL SHIP SYSTEMS ENGINEERING STATION

CONTRACT NUMBER	NSN	# OF UNITS	APL/CID
DLA441-92-M-2844	7310-01-359-2844	6	LG72MDI
DLA441-92-M-Y175	7310-01-359-2845	13	LG36MDI
DLA400-86-D-0090	7310-01-104-1214	14	LG48M

REMARKS:

DATE: MARCH 2002

CERTIFICATION:

IT IS HEREBY CERTIFIED THAT THE TECHNICAL MANUAL PROVIDED UNDER CONTRACT NUMBER DLA441-92-M-2844, DLA441-92-M-Y175, DLA400-86-D-0090 FOR LANG LG72MDI, LG36MDI, AND LG48M HAS BEEN APPROVED BY THE APPROVAL DATA SHOWN ABOVE:

DIRECTOR, GOV'T CONTRACTS

LANG MANUFACTURING COMPANY

FSCM / CAGE #: 34931

CHANGE RECORD

Change no.	Date	Title and/or Brief Description	Signature of Validating Officer

TABLE OF CONTENTS

CHAPTER **PAGE**

1. TABLE OF CONTENTS 6
2. LIST OF ILLUSTRATIONS 7
3. READ FIRST 8
4. SPECIFICATIONS 11
5. EQUIPMENT DESCRIPTION 14
6. INSTALLATION 16
7. OPERATION 18
8. MAINTENANCE & TROUBLESHOOTING PROCEDURES 19
9. PARTS LIST 24
10. WIRING DIAGRAMS 26
11. WARRANTY 28

LIST OF ILLUSTRATIONS

FIGURE #	TITLE OF ILLUSTRATION	PAGE #
1	Specification Sheets	11 to 20
2	MDI-36 Cut Out	21
3	MDI-48 Cut Out	22
4	MDI-72 Cut Out	23
5	Leg Pad Layout	27
6	Sensor Location (Calibration)	31
7	Wiring Diagram 208/240V	34
8	Wiring Diagram 480V	35

IMPORTANT READ FIRST IMPORTANT

CAUTION: THE GRIDDLE IS EXTREMELY HEAVY. FOR SAFE HANDLING, INSTALLER SHOULD OBTAIN HELP AS NEEDED, OR EMPLOY APPROPRIATE MATERIALS HANDLING EQUIPMENT (SUCH AS A FORKLIFT, DOLLY, OR PALLET JACK) TO REMOVE THE UNIT FROM THE SKID AND MOVE IT TO THE PLACE OF INSTALLATION.

CAUTION: ANY STAND, COUNTER OR OTHER DEVICE ON WHICH GRIDDLE WILL BE LOCATED MUST BE DESIGNED TO SUPPORT THE WEIGHT OF THE GRIDDLE(S).

CAUTION: SHIPPING STRAPS ARE UNDER TENSION AND CAN SNAP BACK WHEN CUT.

DANGER: THIS APPLIANCE MUST BE GROUNDED AT THE TERMINAL PROVIDED. FAILURE TO GROUND THE APPLIANCE COULD RESULT IN ELECTROCUTION AND DEATH.

WARNING: INSTALLATION OF THE UNIT MUST BE DONE BY PERSONNEL QUALIFIED TO WORK WITH ELECTRICITY. IMPROPER INSTALLATION CAN CAUSE INJURY TO PERSONNEL AND/OR DAMAGE TO EQUIPMENT. UNIT MUST BE INSTALLED IN ACCORDANCE WITH ALL APPLICABLE CODES.

NOTICE: The data plate is located next to the grease drawer, behind access panel. The griddle voltage, wattage, serial number, wire size, and clearance specifications are on the data plate. This information should be carefully read and understood before proceeding with the installation.

NOTICE: The installation of any components such as a vent hood, grease extractors, fire extinguisher systems, must conform to their applicable National, State and locally recognized installation standards.

NOTICE: During the first few hours of operation you may notice a small amount of smoke coming off the griddle surface, and a faint odor from the smoke. This is normal for a new griddle and will disappear after the first few hours of use.

CAUTION: ALWAYS KEEP THE AREA NEAR THE APPLIANCE FREE FROM COMBUSTIBLE MATERIALS.

CAUTION: KEEP FLOOR IN FRONT OF EQUIPMENT CLEAN AND DRY. IF SPILLS OCCUR, CLEAN IMMEDIATELY, TO AVOID THE DANGER OF SLIPS OR FALLS.

IMPORTANT READ FIRST IMPORTANT

WARNING: **KEEP WATER AND SOLUTIONS OUT OF CONTROLS. NEVER SPRAY OR HOSE CONTROL CONSOLE, ELECTRICAL CONNECTIONS, ETC.**

CAUTION: **MOST CLEANERS ARE HARMFUL TO THE SKIN, EYES, MUCOUS MEMBRANES AND CLOTHING. PRECAUTIONS SHOULD BE TAKEN TO WEAR RUBBER GLOVES, GOGGLES OR FACE SHIELD AND PROTECTIVE CLOTHING. CAREFULLY READ THE WARNING AND FOLLOW THE DIRECTIONS ON THE LABEL OF THE CLEANER TO BE USED.**

NOTICE: **Service on this, or any other, LANG appliance must be performed by qualified personnel only. Consult your authorized service station directory or call the factory at 1-800-224-LANG (5264), or WWW.LANGWORLD.COM For the service station nearest you.**

WARNING: **BOTH HIGH AND LOW VOLTAGES ARE PRESENT INSIDE THIS APPLIANCE WHEN THE UNIT IS PLUGGED/WIRED INTO A LIVE RECEPTACLE. BEFORE REPLACING ANY PARTS, DISCONNECT THE UNIT FROM THE ELECTRIC POWER SUPPLY.**

CAUTION: **USE OF ANY REPLACEMENT PARTS OTHER THAN THOSE SUPPLIED BY LANG OR THEIR AUTHORIZED DISTRIBUTORS CAN CAUSE BODILY INJURY TO THE OPERATOR AND DAMAGE TO THE EQUIPMENT AND WILL VOID ALL WARRANTIES.**

LANG MANUFACTURING COMPANY

MANUAL FOR MODEL ECO

ELECTRIC CONVECTION OVENS

ISSUE DATE FEBRUARY 1999

LANG MANUFACTURING COMPANY

6500 MERRILL CREEK PARKWAY

EVERETT, WA 98203

ELECTRIC GRIDDLES PER: MIL-G-2338L

MIL SPEC	LANG MODEL NUMBER
TYPE I, SIZE 2*	LG-36M
TYPE I, SIZE 3*	LG-72M
TYPE I, SIZE 5*	LG-24M
TYPE I, SIZE 6*	LG-48M

TYPE II- Use the same model number as above Then add for:

STYLE 1- with Stand
STYLE 2- with Castered Stand
STYLE 3- with Bolt Down Stand

TYPE III, SIZE 2*	LGMDI36
TYPE III, SIZE 3*	LGMDI72
TYPE III, SIZE 6*	LGMDI48

* N.S.A. for “Naval Shipboard Application”. All components will fit through a 26” X 66” watertight door.

ITEM NO.
MODEL NO.
61201-14 6/93 Printed in U.S.A.

MARINE
Two Foot COUNTER GRILL

MODEL LG-24BM

Special Grooved Griddle Cleaning Brush is supplied with each grooved model.

- Griddle plate is constructed of either 1/2" or 1" thick steel plate, precision machined and highly polished. When grooved, griddle plate is 1" thick. The 1" thick plate eliminates hot or cold spots, recovery problems, and provides even heat to the edges of the griddle.
- A pilot light by each thermostat indicates when heating elements are energized. The light shuts off when the dialed temperature is reached.
- A grease splasher and front grease trough are welded continuously on the underside to prevent leakage.
- Banking strips are available between griddles and Quartz Combo Broil 'n Grills. (See accessories)
- Each twelve inches of griddle surface has 6.0 K.W. (D.C. voltage 5.0 K.W.) for high efficiency, quick recovery and outstanding performance.
- Standard finish on all models shall be of high quality stainless steel. Each unit is supplied with four 4" stainless steel adjustable legs and stainless steel front grab bar. Stands for griddles are available.
- The griddle is controlled by two sensitive thermostats which accurately keep the cooking surface at the planned heat setting. They are mounted in a fully enclosed air-cooled control compartment which provides protection from heat and grease. (See diagram on reverse side)
- The heavy-duty incoloy sheathed heating elements are pressure-clamped to the bottom of the griddle plate with Lang's exclusive corrugated clamps, assuring even heat and long element life.
- Grease from the front gutter is funneled to a large eight-quart grease bucket located in a fully enclosed sleeve. Both sleeve and grease bucket are easily removable for cleaning. (See diagram on reverse side)
- Lang Marine griddles meet the requirements of the United States Coast Guard and of the National Sanitation Foundation Testing Laboratory.
- Standard warranty shall cover parts and labor for one full year.

GRIDDLES ARE AVAILABLE

- **1" Thick**
- **1/2" Thick**
- **All Smooth**
- **All Grooved**
- **Combination Smooth & Grooved**
- **Drop-In Models**

STAINLESS STEEL FRONT GRAB BAR STANDARD EQUIPMENT

Stainless Steel Exterior

MODEL LG-24M

LANG MANUFACTURING COMPANY

Specifications subject to change without notice.

SPECIFICATIONS FOR TWO FOOT MARINE GRIDDLES
Series LG-24M Smooth or Grooved - 1" or ½" thick

SMOOTH OR GROOVED COMBINATIONS

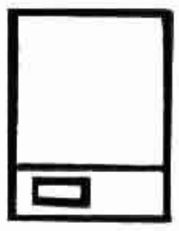

MODEL LG-24M

MODEL LG-24AM

MODEL LG-24BM

MODEL LG-24CM

Grooving Scale: All grooves in increments of 12"

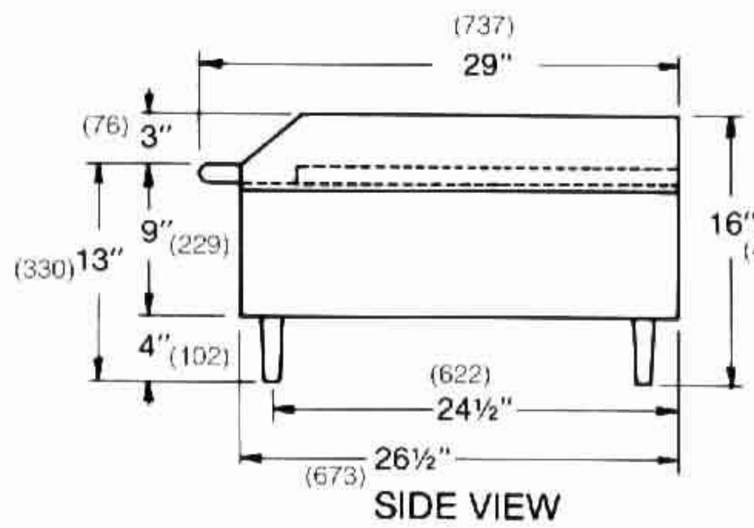

SIDE VIEW

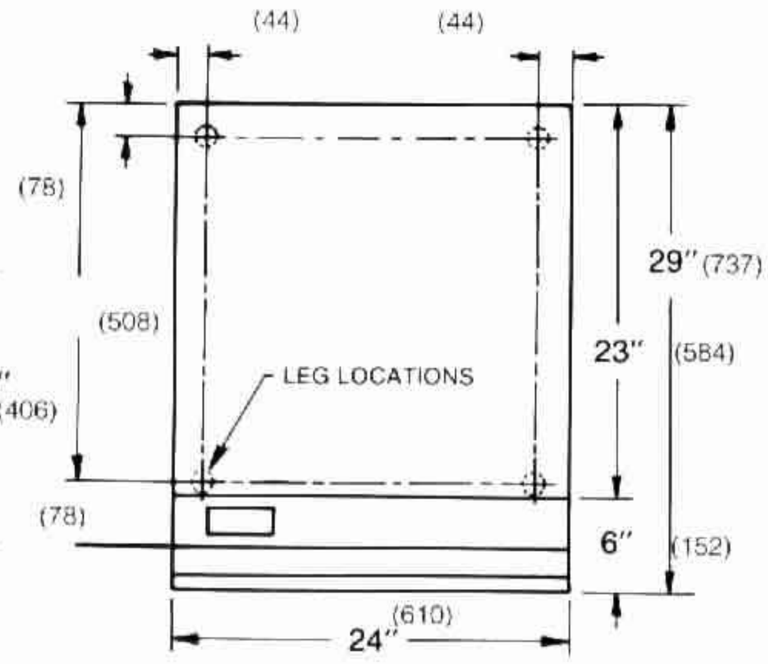

PLAN VIEW

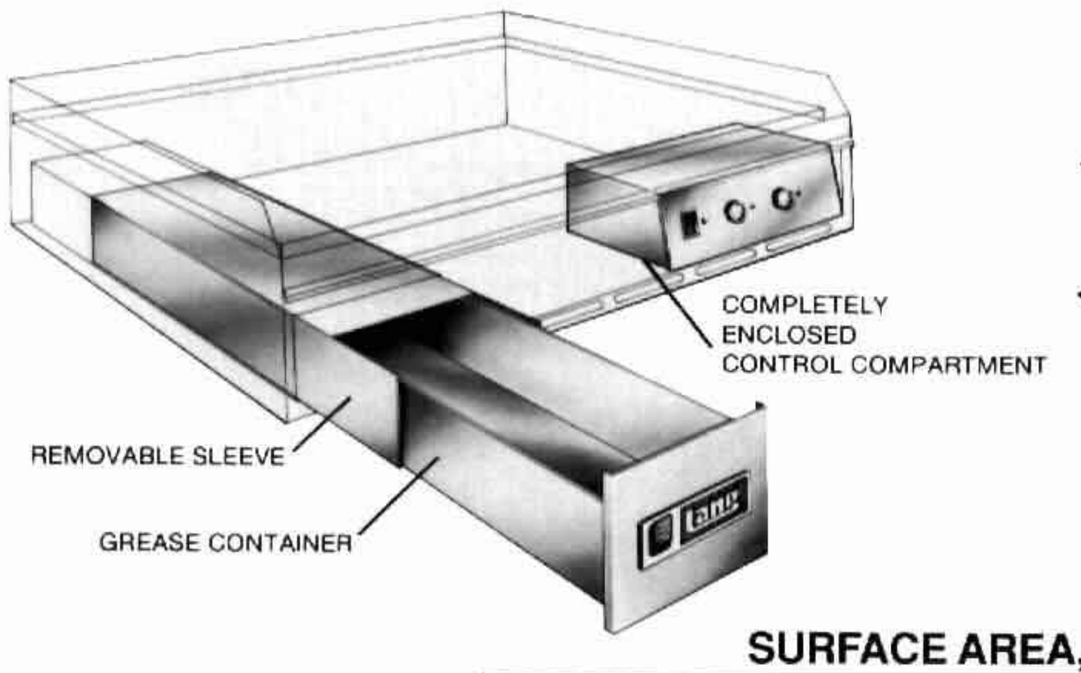

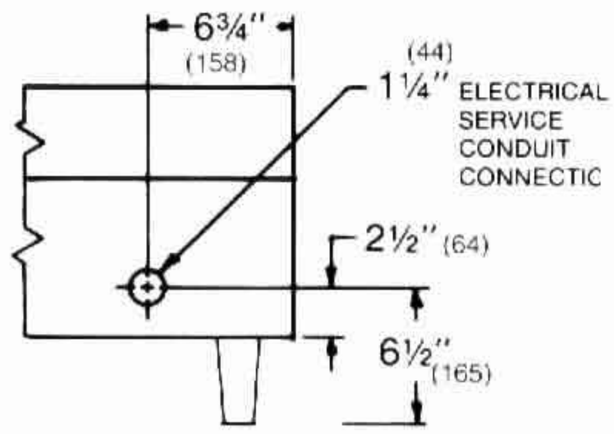

REAR VIEW

All griddles are supplied with 4" adjustable legs.

SURFACE AREA, WIDTH & WEIGHT

MODEL	SQ. INCHES OF GRILL SURFACE	OVERALL WIDTH	WEIGHT LBS.
LG-24M	552	24"	150
LG-24M-1	552	24"	210

NOTE: All units are shipped from the factory wired for three phase power connection. For simple conversion to single phase power connection, see wiring diagram attached to the unit. This conversion is extremely easy and neither terminates the Lang warranty nor is chargeable to Lang as warranty service.

All dimensions are in both inches and millimeters. (approx. millimeters in parentheses)

GRIDDLE SERIES LG-24M SMOOTH OR GROOVED																		
MODEL	THREE PHASE LOADING			TOTAL K.W.	NOMINAL AMPS PER LINE													
					THREE PHASE									SINGLE PHASE		D.C. AMPS	
	K.W. PER PHASE				208 VOLT			240 VOLT			480 VOLT			208 V	240 V	115VDC	230VDC
	L1-L2	L2-L3	L3-L1		L1	L2	L3	L1	L2	L3	L1	L2	L3				
LG-24M	6.0	0.0	6.0	12.0	50.0	28.8	28.8	43.3	25.0	25.0	21.7	12.5	12.5	57.7	50.0		
LG-24M				10.0	K.W. AND AMPERAGE RATING FOR 115V and 230V D.C.											87.0	43.5

WHEN ORDERING SPECIFY VOLTAGE AND PHASE

Specifications subject to change without notice.

LANG MANUFACTURING COMPANY

PRINTED IN U.S.A.
201.14.6/93

ITEM NO.
MODEL NO.
61201-15 8/97 Printed in U.S.A.

MARINE
Three Foot Counter Griddle
1" Thick Griddle Plate

Model: LG-36M-1

GRIDDLES ARE AVAILABLE
- 1" Thick
- All Smooth
- All Grooved
- Combination Smooth & Grooved

Model: LG-36BM

- Grill plate is constructed with a 1" thick steel plate, precision machined and highly polished. When grooved, grill plate is 1" thick. The 1" thick plate eliminates hot or cold spots, recovery problems, and provides even heat to the edges of the grill.
- A pilot light by each thermostat indicates when heating elements are energized. The light shuts off when the dialed temperature is reached.
- A grease splasher and front grease through are welded continuously on the underside to prevent leakage.
- Each griddle carries a one-year warranty on parts.
- Each twelve inches of griddle surface has 6.0 K.W. (D.C. voltage 5.0 K.W.) for high efficiency, quick recovery and outstanding performance.
- Standard finish on all models is of high quality stainless steel. Each unit is supplied with four 4" stainless steel adjustable legs and stainless steel front grab bar. Stands for griddles are available.
- The griddle is controlled by three sensitive thermostats which accurately keep the cooking surface at the planned heat setting. They are mounted in a fully enclosed air-cooled control compartment which provides protection from heat and grease. (See diagram reverse side)
- The heavy-duty incology-sheathed heating elements are pressure-clamped to the bottom of the griddle plate with Lang's exclusive corrugated clamps, assuring even heat and long element life.
- Grease from the front gutter is funneled to a large eight quart grease bucket located in a fully enclosed sleeve. Both sleeve and grease bucket are easily removable for cleaning. (See diagram on reverse side)
- Lang Marine griddles meet the requirements of the United States Coast Guard and of the National Sanitation Foundation Testing Laboratory. This griddle is U.L. listed.

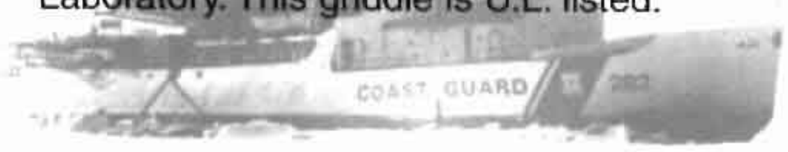

MIL-G-2338L
Size 2
Type I
Style 1
NSN#: 7310-01-121-2082

VOLTAGE AVAILABLE
Single or Three Phase
208 Volt A.C. – 240 Volt A.C. – 480 Volt A.C.
115 Volt D.C. – 230 Volt D.C.

LANG MANUFACTURING COMPANY

6500 Merrill Creek Parkway
Everett, WA 98203
TOLL FREE (800) 882-6368
PHONE (425) 349-2400
SERVICE (800) 224-5264
FAX (425) 349-2733

SPECIFICATIONS FOR THREE FOOT MARINE GRIDDLES
Series LG-36M Smooth or Grooved - 1" thick

SMOOTH OR GROOVED COMBINATIONS

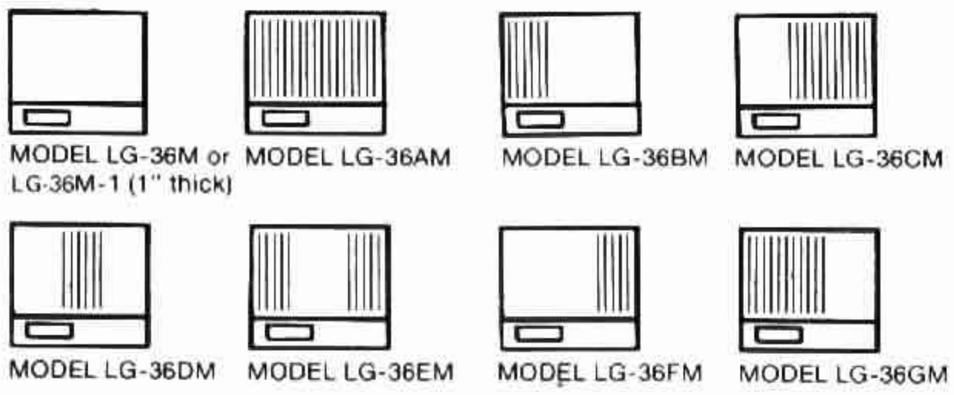

Grooving Scale: All grooves in increments of 12".

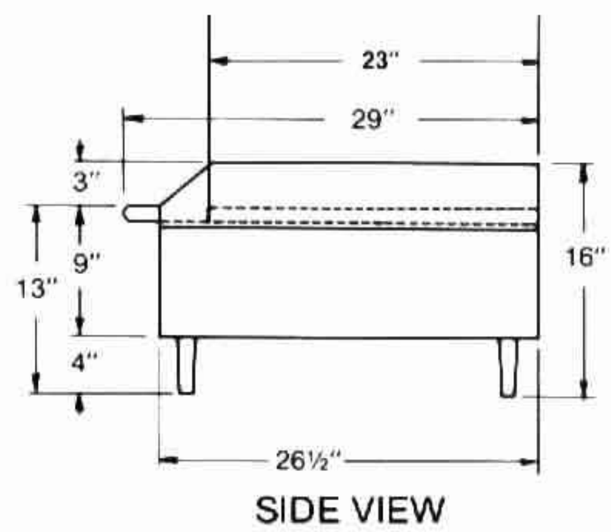

SIDE VIEW

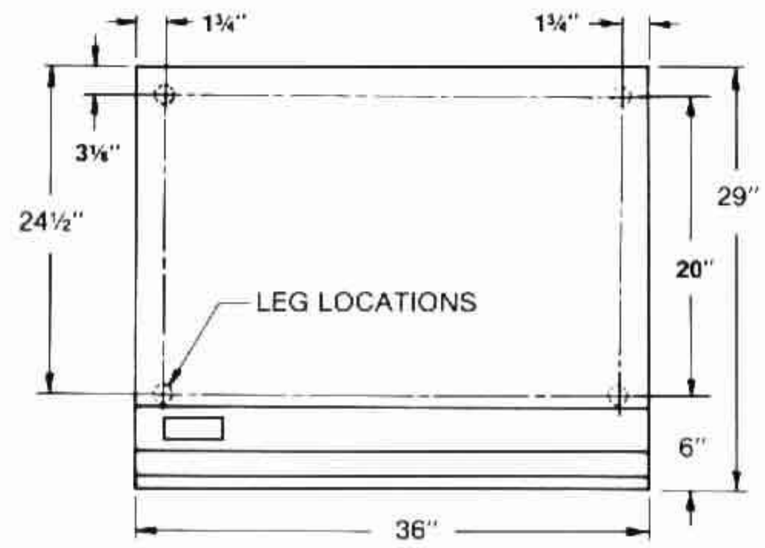

PLAN VIEW

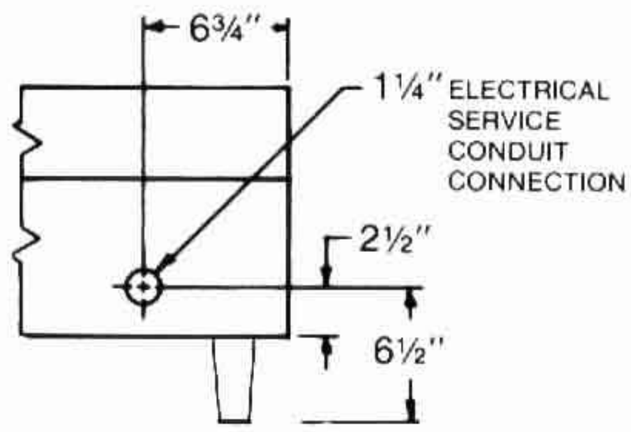

REAR VIEW

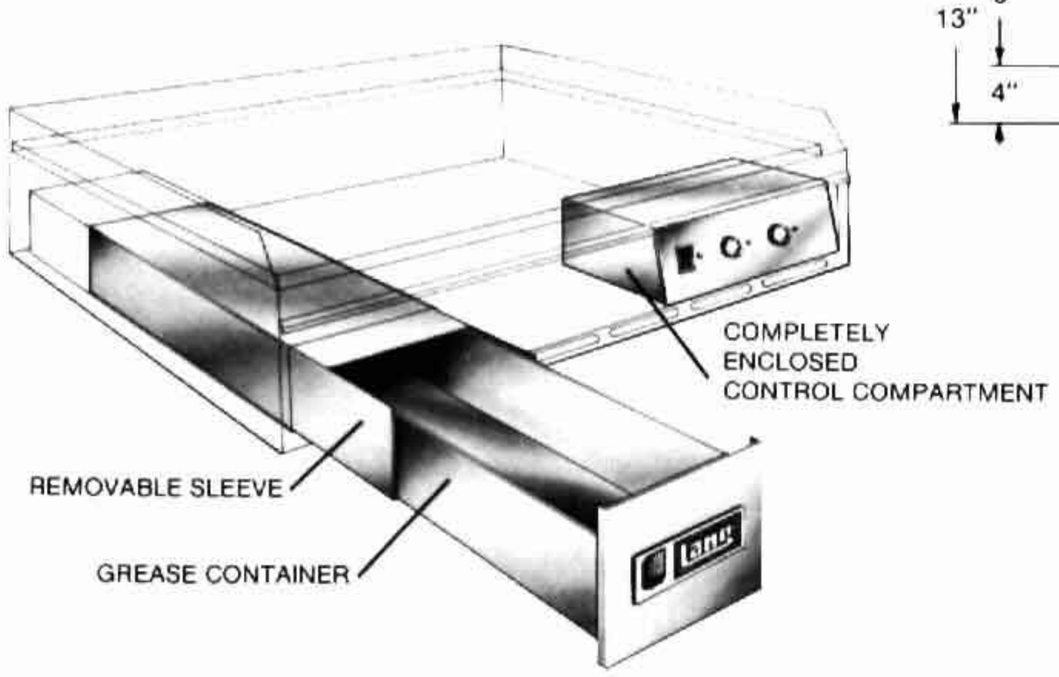

All grills are supplied with 4" adjustable legs.

NOTE: All units are shipped from the factory wired for three phase power connection. For simple conversion to single phase power connection, see wiring diagram attached to the unit. This conversion is extremely easy and neither terminates the Lang warranty nor is chargeable to Lang as warranty service.

ELECTRICAL DATA
GRIDDLE SERIES LG-36M SMOOTH OR GROOVED

MODEL	THREE PHASE LOADING K.W. PER PHASE			TOTAL K.W.	NOMINAL AMPS PER LINE												
					THREE PHASE									SINGLE PHASE		D.C. AMPS	
					208 VOLTS			240 VOLTS			480 VOLTS			208V	240V	115VDC	230VDC
	L1-L2	L2-L3	L3-L1		L1	L2	L3	L1	L2	L3	L1	L2	L3				
LG 36M	6.0	6.0	6.0	18.0	50.0	50.0	50.0	43.3	43.3	43.3	21.7	21.7	21.7	86.5	75.0		
LG 36M				15.0	K.W. AND AMPERAGE RATING FOR 115V AND 230V D.C.											*	65.0

*Contact factory for amperage information.

WHEN ORDERING SPECIFY VOLTAGE AND PHASE

Specifications subject to change without notice.

LANG MANUFACTURING COMPANY

6500 Merrill Creek Parkway, Everett, WA 98203 U.S.A.

PRINTED IN U.S.A.
61201-15 9/97

TOLL FREE 800/882-6368
PHONE 425/349-2400
FAX 425/349-2733

lang

- Griddle plate is constructed of a 1" thick steel plate, precision machined and highly polished. The 1" thick plate eliminates hot or cold spots, recovery problems, and provides even heat to the edges of the grill.
- A pilot light by each thermostat indicates when heating elements are energized. The light shuts off when the dialed temperature is reached.
- A grease splasher and front grease trough are welded continuously on the underside to prevent leakage.
- Each griddle carries a one-year warranty on parts.
- Each twelve inches of griddle surface has 6.0 K.W. (D.C. voltage 5.0 K.W.) for high efficiency, quick recovery and outstanding performance.
- Standard finish on all models is of high quality stainless steel. Each unit is supplied with four 4" stainless steel adjustable legs and stainless steel front grab bar. Stands for griddles are available.
- The griddle is controlled by four sensitive thermostats which accurately keep the cooking surface at the planned heat setting. They are mounted in a fully enclosed air-cooled control compartment which provides protection from heat and grease. (See diagram on reverse side)
- The heavy-duty incology-sheathed heating elements are pressure-clamped to the bottom of the griddle plate with Lang's exclusive corrugated clamps, assuring even heat and long element life.
- Grease from the front gutter is funneled to a large eight quart grease bucket located in a fully enclosed sleeve. Both sleeve and grease bucket are easily removable for cleaning. (See diagram on reverse side)
- Lang Marine griddles meet the requirements of the United States Coast Guard of the National Sanitation Foundation Testing Laboratory. This griddle is U.L. listed.

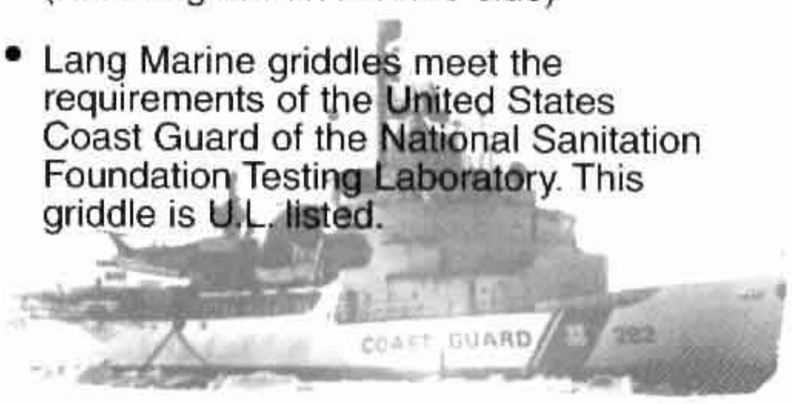

LANG MANUFACTURING COMPANY

6500 Merrill Creek Parkway
Everett, WA 98203
TOLL FREE (800) 882-6368
PHONE (425) 349-2400
SERVICE (800) 224-5264
FAX (425) 349-2733

ITEM NO.	
MODEL NO.	

61201-16 8/97
Printed in U.S.A.

MARINE
Four Foot Counter Griddle
1" Thick Griddle Plate

GRIDDLES ARE AVAILABLE
- **All Smooth**
- **Combination Smooth & Grooved**

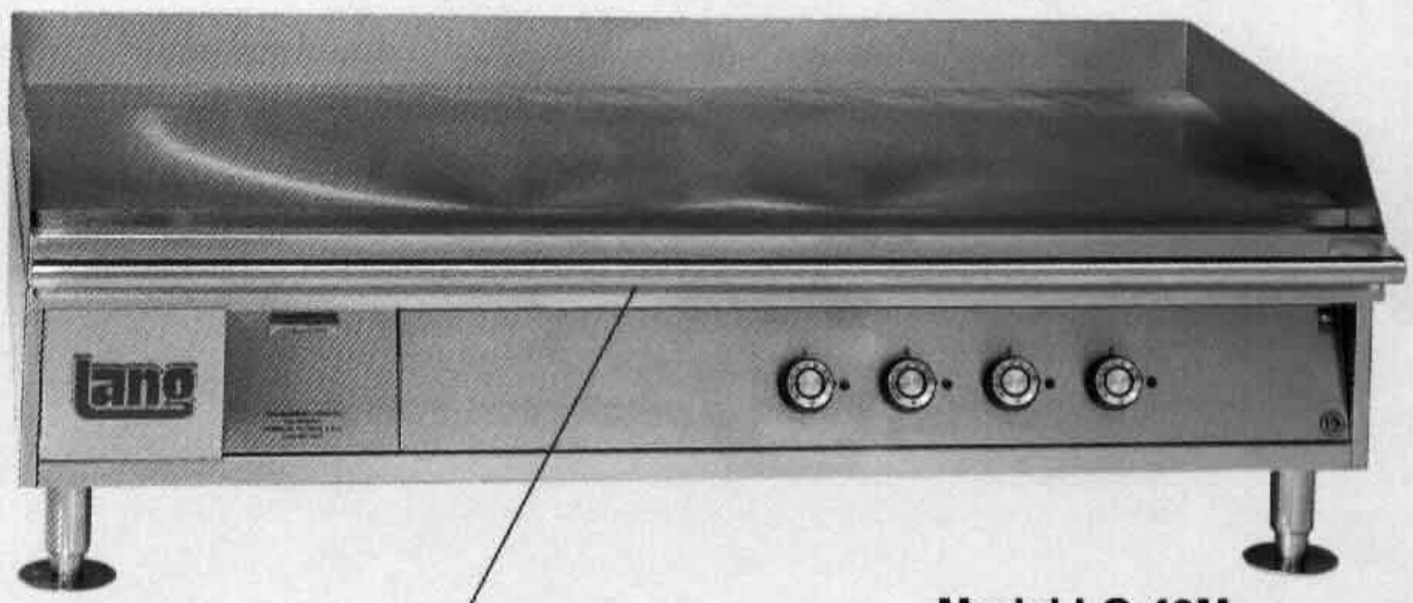

Model LG-48M

Stainless steel front grab bar standard.

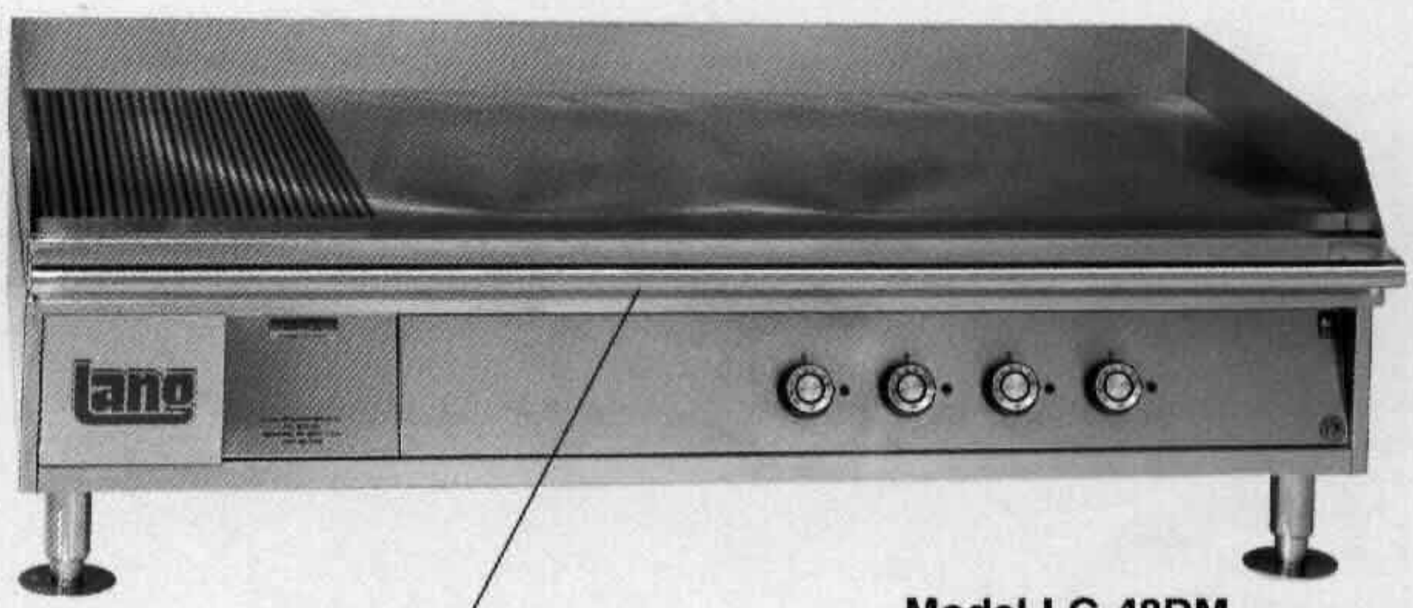

Model LG-48DM

Stainless steel front grab bar standard.

NSN# 7310-01-104-1214

VOLTAGE AVAILABLE
Single or Three Phase
208 Volt A.C. – 240 Volt A.C. – 480 Volt A.C.
115 Volt D.C. – 230 Volt D.C.

MARINE UL LISTED COOKING APPLIANCE 253J

NSF®

SPECIFICATIONS FOR FOUR FOOT MARINE GRIDDLES
Series LG-48M Smooth or Grooved - 1" thick

SMOOTH OR GROOVED COMBINATIONS

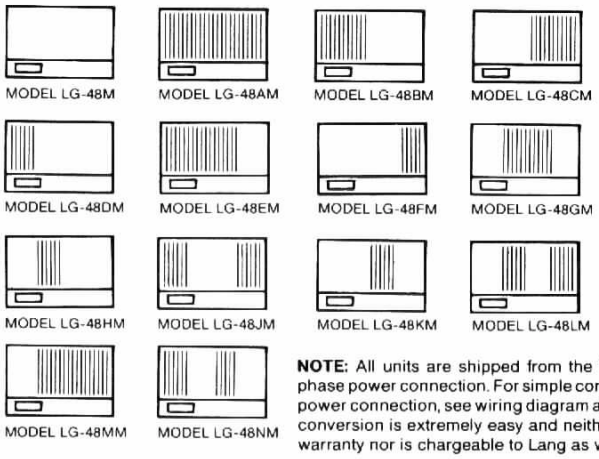

NOTE: All units are shipped from the factory wired for three phase power connection. For simple conversion to single phase power connection, see wiring diagram attached to the unit. This conversion is extremely easy and neither terminates the Lang warranty nor is chargeable to Lang as warranty service.

Grooving Scale: All grooves in increments of 12"

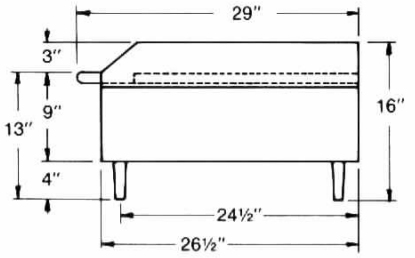

SIDE VIEW

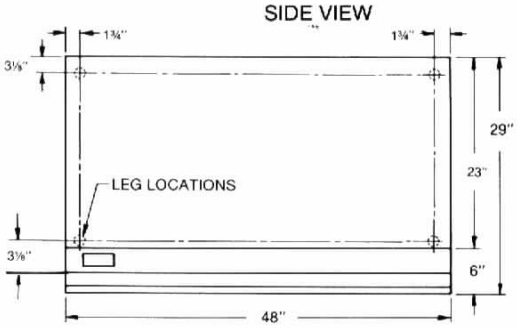

PLAN VIEW

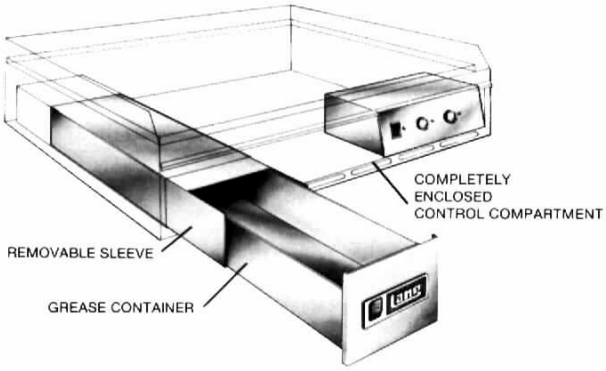

All grills are supplied with 4" adjustable legs.

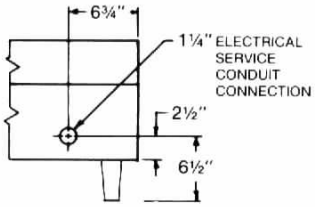

REAR VIEW

SURFACE AREA, WIDTH & WEIGHT

MODEL	SQ. INCHES OF GRILL SURFACE	OVERALL WIDTH	WEIGHT LBS.
LG-48M	1104	48"	515

ELECTRICAL DATA
GRIDDLE SERIES LG-48M SMOOTH OR GROOVED

MODEL	THREE PHASE LOADING K.W. PER PHASE			TOTAL K.W.	NOMINAL AMPS PER LINE												
					THREE PHASE									SINGLE PHASE		D.C. AMPS	
					208 VOLTS			240 VOLTS			480 VOLTS			208V	240V	115VDC	230VDC
	L1-L2	L2-L3	L3-L1		L1	L2	L3	L1	L2	L3	L1	L2	L3				
LG 48M	12.0	6.0	6.0	24.0	75.0	75.0	50.0	65.0	65.0	43.3	32.5	32.5	21.7	115.4	100.0		
LG 48M				20.0	K.W. AND AMPERAGE RATING FOR 115V AND 230V D.C.											*	87.0

*Contact factory for amperage information.

WHEN ORDERING SPECIFY VOLTAGE AND PHASE

Specifications subject to change without notice.

LANG MANUFACTURING COMPANY

6500 Merrill Creek Parkway, Everett, WA 98203 U.S.A.

PRINTED IN U.S.A.
61201-16 9/97

TOLL FREE 800/882-6368
PHONE 425/349-2400
FAX 425/349-2733

ITEM NO.
MODEL NO.
61201-18 12/94 Printed in U.S.A.

Heavy Duty Marine
Six Foot Counter Griddle
Standard 1" Thick Grill Plate

Lang Griddles offer many outstanding features!

- Grill plate is constructed of a 1" thick steel plate, precision machined and highly polished. The 1" thick plate eliminates hot or cold spots, recovery problems, and provides even heat to the edges of the grill.
- A pilot light by each thermostat indicates when heating elements are energized. The light shuts off when the dialed temperature is reached.
- A grease splasher and front grease trough are welded continuously on the underside to prevent leakage.
- Banking strips are available between griddles and Quartz Combo. (See accessories)
- Each twelve inches of griddle surface has 6.0 K.W. (D.C. voltage 5.0 K.W.) for high efficiency, quick recovery and outstanding performance.
- Standard finish on all models shall be of high quality stainless steel. Each unit is supplied with four 4" stainless steel adjustable legs with bolt down flange and stainless steel front grab bar. Stands for griddles are available.
- The griddle is controlled by six sensitive thermostats which accurately keep the cooking surface at the planned heat setting. They are mounted in a fully enclosed air-cooled control compartment which provides protection from heat and grease. (See diagram on reverse side)
- The heavy-duty Incoloy sheathed heating elements are pressure-clamped to the bottom of the grill plate with Lang's exclusive corrugated clamps, assuring even heat and long element life.
- Grease from the front gutter is funneled to a large 8 quart grease bucket located in a fully enclosed sleeve. Both sleeve and grease bucket are easily removable for cleaning. (See diagram on reverse side)
- Tested and Listed by Underwriters Laboratories as meeting UL 197 to include the Marine Supplement per U.S. Coast Guard Regulation CFR 46 111.77-3.
- Standard warranty covers parts and labor for one full year.

Lang Manufacturing Company
6500 Merrill Creek Parkway
Everett, WA 98203
Toll-Free: 1-800-882-6368
Phone: (425)349-2400
Fax: (425)349-2733

GRIDDLES ARE AVAILABLE
- **All Smooth**
- **Combination Smooth & Grooved**

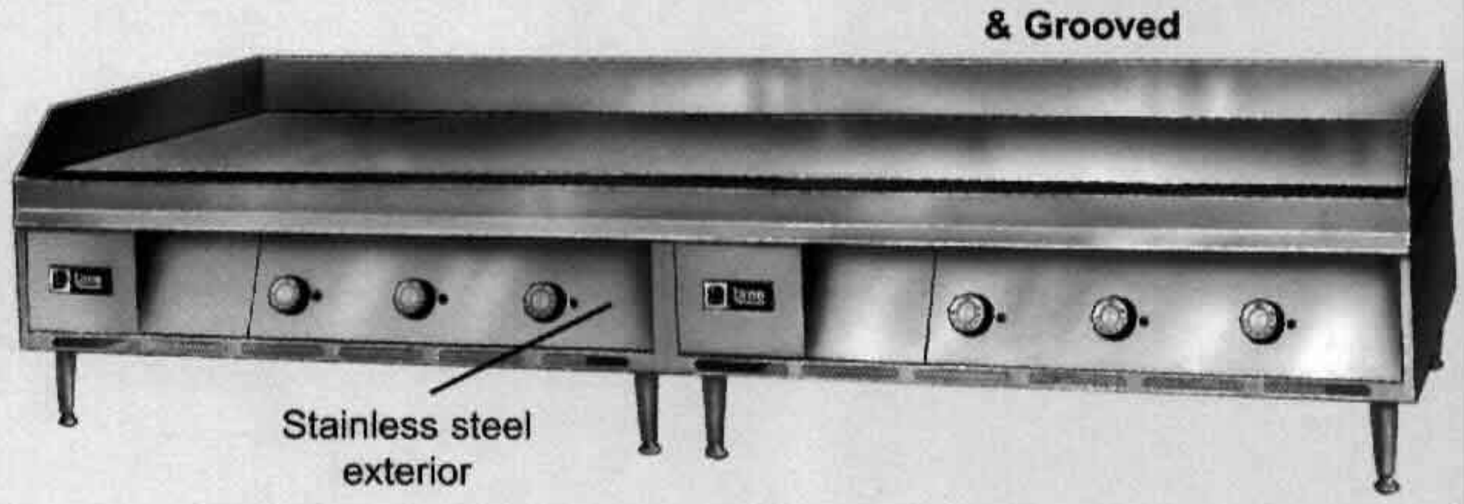

MODEL LG-72M

VOLTAGES AVAILABLE
208 Volt A.C. – 240 Volt A.C. – 480 Volt A.C.
Single or Three Phase
Contact Factory for D.C. Voltages

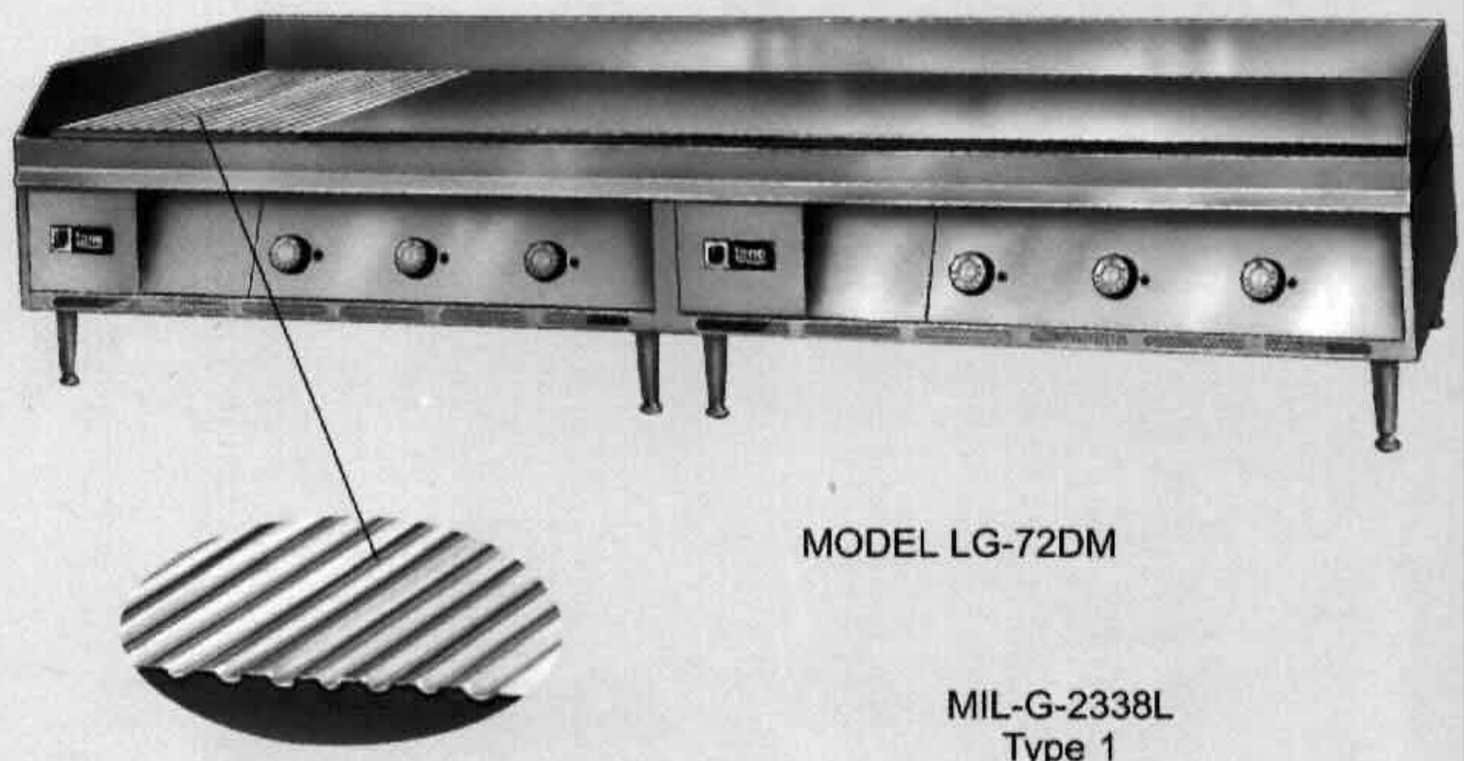

MODEL LG-72DM

MIL-G-2338L
Type 1
Size 3

APL# 430280094

Special grooved griddle cleaning brush is supplied with each grooved model.

SPECIFICATIONS FOR SIX FOOT MARINE GRIDDLES
Series LG-72M Smooth or Grooved Grill Combinations - 1" thick

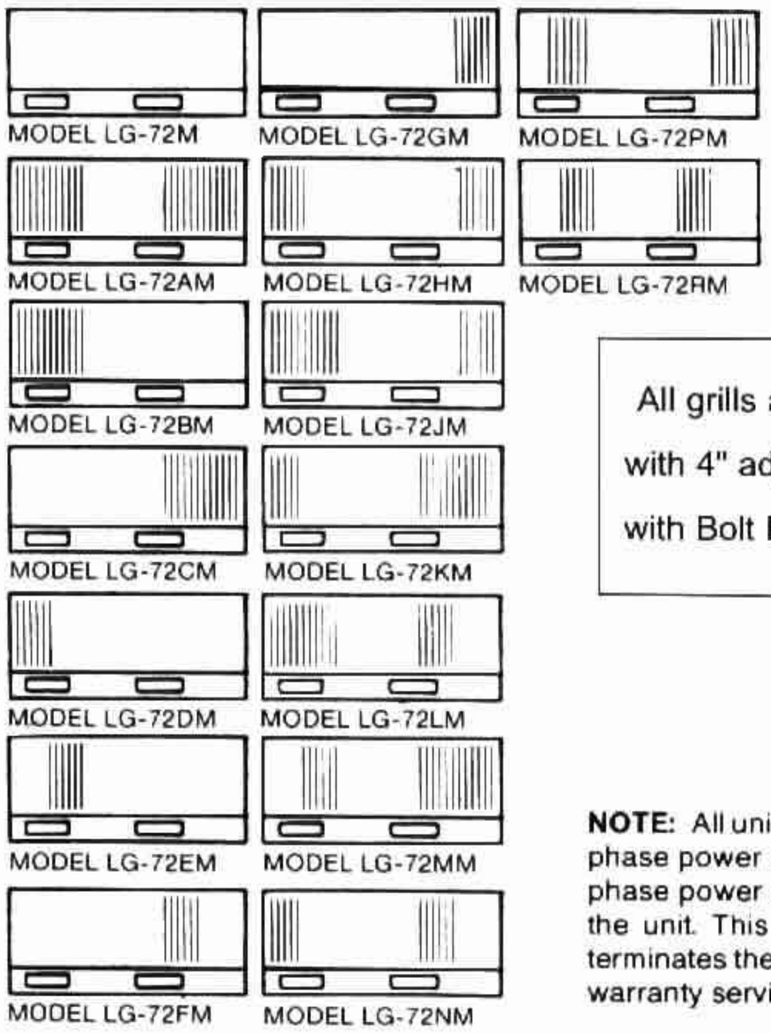

All grills are supplied with 4" adjustable legs with Bolt Down Flange

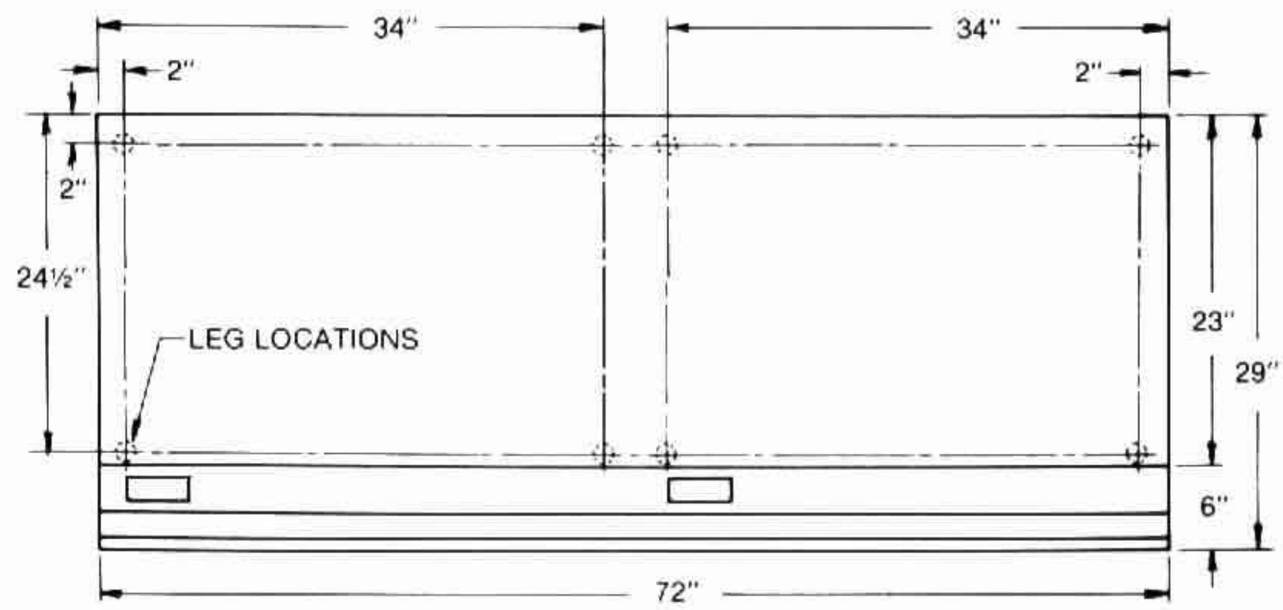

PLAN VIEW

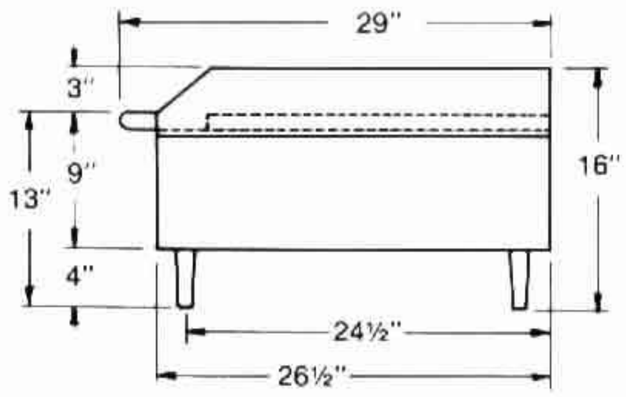

SIDE VIEW

NOTE: All units are shipped from the factory wired for three phase power connection. For simple conversion to single phase power connection, see wiring diagram attached to the unit. This conversion is extremely easy and neither terminates the Lang warranty nor is chargeable to Lang as warranty service.

Grooving Scale: All grooves in increments of 12".

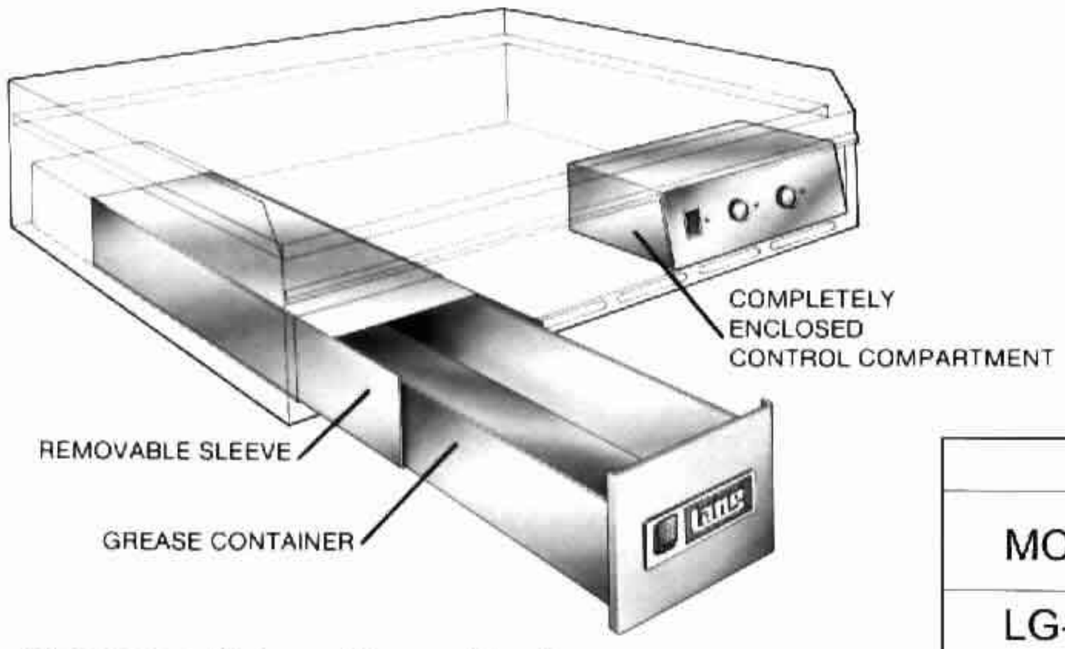

Clearances: 2" from sides and back.

REAR VIEW

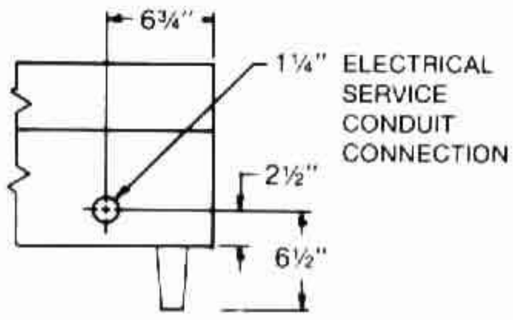

Note: Two Separate Connections Are Required.

SURFACE AREA, WIDTH & WEIGHT			
MODEL	SQ. INCHES OF GRILL SURFACE	OVERALL WIDTH	WEIGHT LBS.
LG-72M	1656	72"	785

ELECTRICAL DATA																		
MODEL NO. LG-72M	GRIDDLE SERIES LG-72M SMOOTH OR GROOVED																	
	THREE PHASE LOADING			TOTAL K.W.	NOMINAL AMPS PER LINE													
					THREE PHASE									SINGLE PHASE		D.C. AMPS	
	K.W. PER PHASE				208 VOLTS			240 VOLTS			480 VOLTS			208V	240V	115V DC	230V DC
	L1-L2	L2-L3	L3-L1		L1	L2	L3	L1	L2	L3	L1	L2	L3				
CONN. 1	6.0	6.0	6.0	18.0	50.0	50.0	50.0	43.3	43.3	43.3	21.7	21.7	21.7	86.5	75.0		
CONN. 2	6.0	6.0	6.0	18.0	50.0	50.0	50.0	43.3	43.3	43.3	21.7	21.7	21.7	86.5	75.0		
CONN. 1				15.0												130.4	65.2
CONN. 2				15.0												130.4	65.2

WHEN ORDERING SPECIFY VOLTAGE AND PHASE

Specifications subject to change without notice.

LANG MANUFACTURING COMPANY

lang

Customize the Look of Your Galley

- Grill plate is constructed with a 3/4" thick steel plate, precision machined and highly polished. The 3/4" thick plate eliminates hot or cold spots, recovery problems, and provides even heat to the edges of the griddle.
- Griddles are available in 3, 4 and 6 foot models.
- The drop-in griddle gives your galley flexibility in movement - no equipment to maneuver around or bump into. The drop-in feature keeps the griddle plate flush with the countertop, eliminating food/grease particles slipping behind or beneath the equipment.
- A pilot light by each thermostat indicates when heating elements are energized. The light shuts off when the dialed temperature is reached.
- Each twelve inches of griddle surface has 6.0 K.W. (D.C. voltage 5.0 K.W.) for high efficiency, quick recovery and outstanding performance.
- The griddle is controlled by three sensitive thermostats which accurately keep the cooking surface at the planned heat setting. They are mounted in a fully enclosed air-cooled control compartment which provides protection from heat and grease.
- The heavy-duty incology-sheathed heating elements are pressure-clamped to the bottom of the griddle plate with Lang's exclusive corrugated clamps, assuring even heat and long element life.
- Grease from the front gutter is funneled to a large eight quart grease bucket located in a fully enclosed sleeve. Both sleeve and grease bucket are easily removable for cleaning.
- Lang Marine griddles meet the requirements of the United States Coast Guard and of the National Sanitation Foundation Testing Laboratory. This griddle is U.L. and NSF approved.

LANG MANUFACTURING COMPANY

6500 Merrill Creek Parkway
Everett, WA 98203
TOLL FREE (800) 882-6368
PHONE (425) 349-2400
SERVICE (800) 224-5264
FAX (425) 349-2733

ITEM NO.
MODEL NO.
61200-108 10/97 Printed in U.S.A

MARINE Drop-In Griddle

- 3/4" Thick Steel Plate
- All Smooth
- Combination Smooth & Grooved

MIL-W-G-2857	
Type: III	Sizes: 2,3,6

SPECIFICATIONS FOR MARINE DROP-IN GRIDDLE

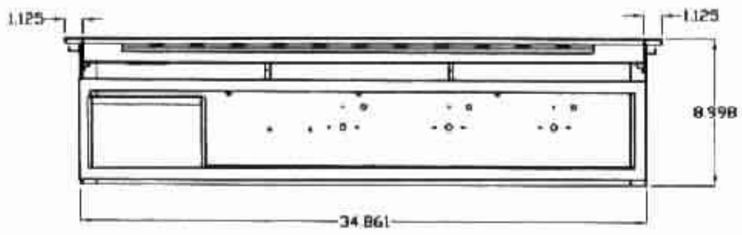

FRONT VIEW

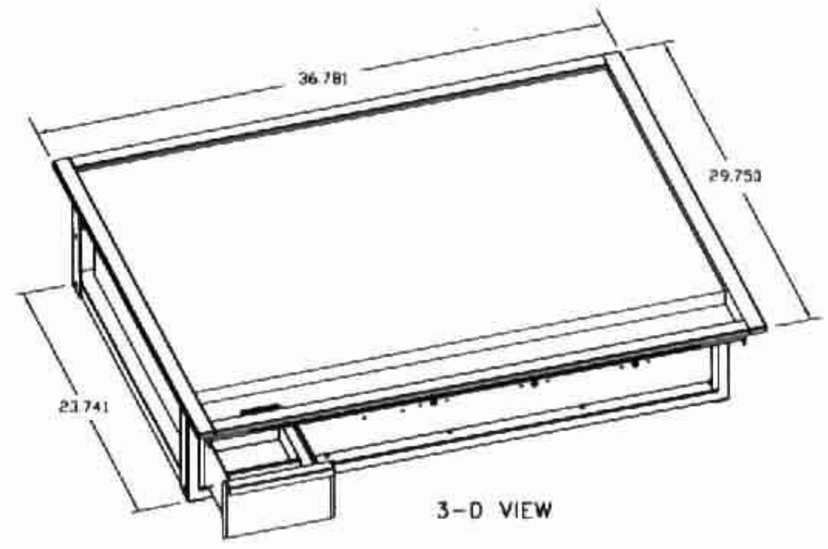

3-D VIEW

3-Foot model LG-36S-MDI

NSN: 7310-01-385-3906
APL: 430280159

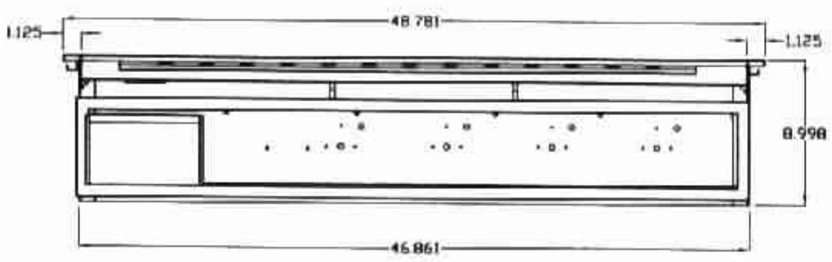

FRONT VIEW

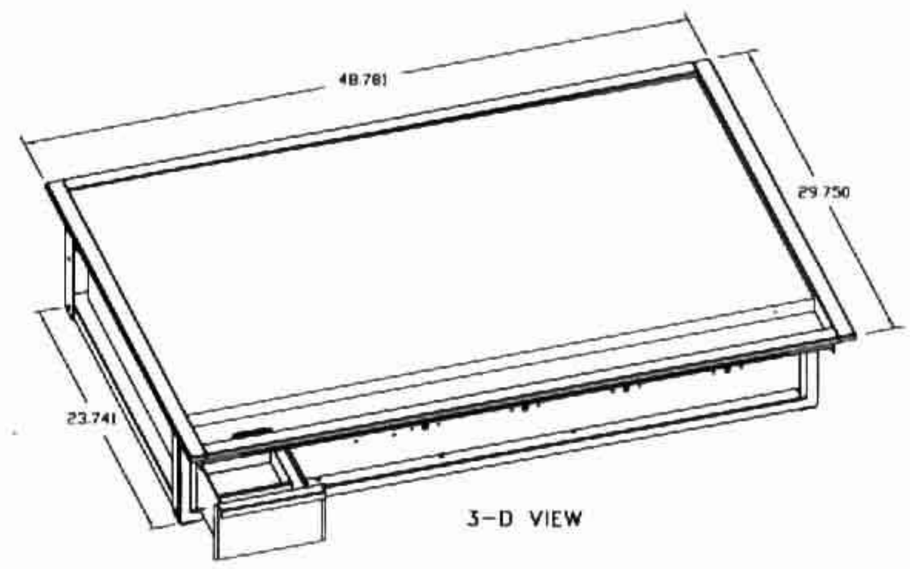

3-D VIEW

4-Foot model LG-48S-MDI

NSN: 7310-01-385-3911

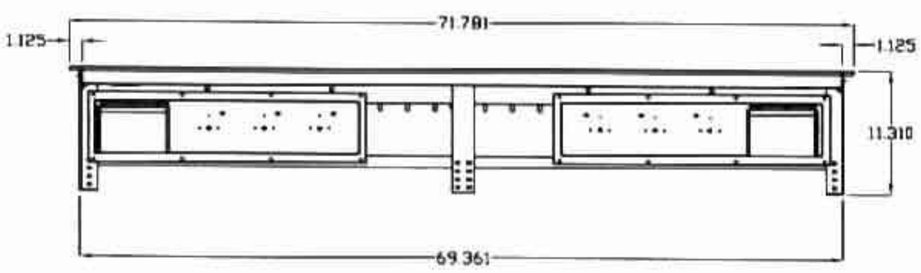

FRONT VIEW

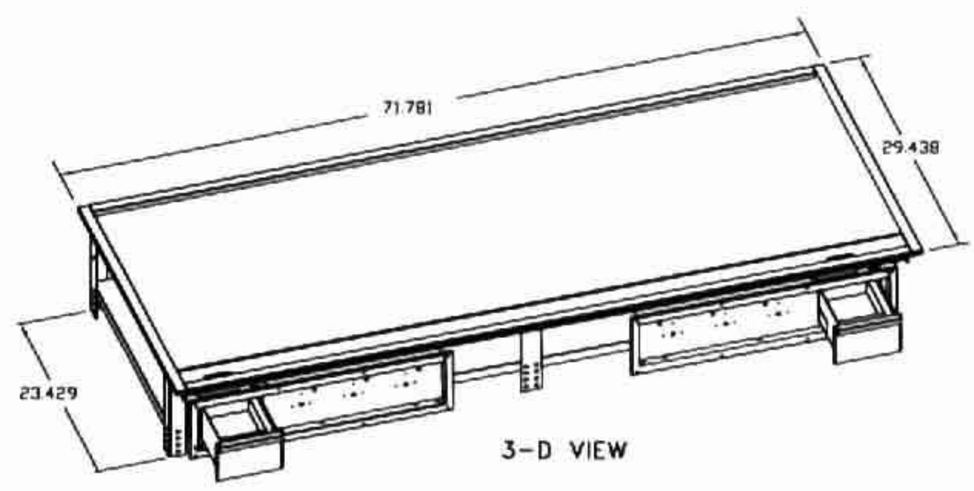

3-D VIEW

6-Foot model LG-72S-MDI

NSN: 7310-01-385-3921
APL: 430280160

ELECTRICAL DATA FOR MARINE DROP-IN ELECTRIC GRIDDLES

MODEL NUMBER		TOTAL K.W.	NOMINAL AMPS PER LINE									SINGLE PHASE	
			THREE PHASE										
			208 VOLTS			240 VOLTS			480 VOLTS			208V	240V
			L1	L2	L3	L1	L2	L3	L1	L2	L3		
LG-36S-MDI		18.0	50.0	50.0	50.0	43.3	43.3	43.3	21.7	21.7	21.7	86.5	75.0
LG-48S-MDI		24.0	75.0	75.0	50.0	65.0	65.0	43.3	32.5	32.5	21.7	115.2	100.0
LG-72S-MDI	#1	18.0	50.0	50.0	50.0	43.3	43.3	43.3	21.7	21.7	21.7	86.5	75.0
	#2	18.0	50.0	50.0	50.0	43.3	43.3	43.3	21.7	21.7	21.7	86.5	75.0

WHEN ORDERING SPECIFY VOLTAGE AND PHASE

Specifications subject to change without notice.

LANG MANUFACTURING COMPANY

6500 Merrill Creek Parkway, Everett, WA 98203 U.S.A.

TOLL FREE 800/882-6368
PHONE 425/349-2400
FAX 425/349-2733

PRINTED IN U.S.A.
100-108 10/97

MDI-36 CUT OUT

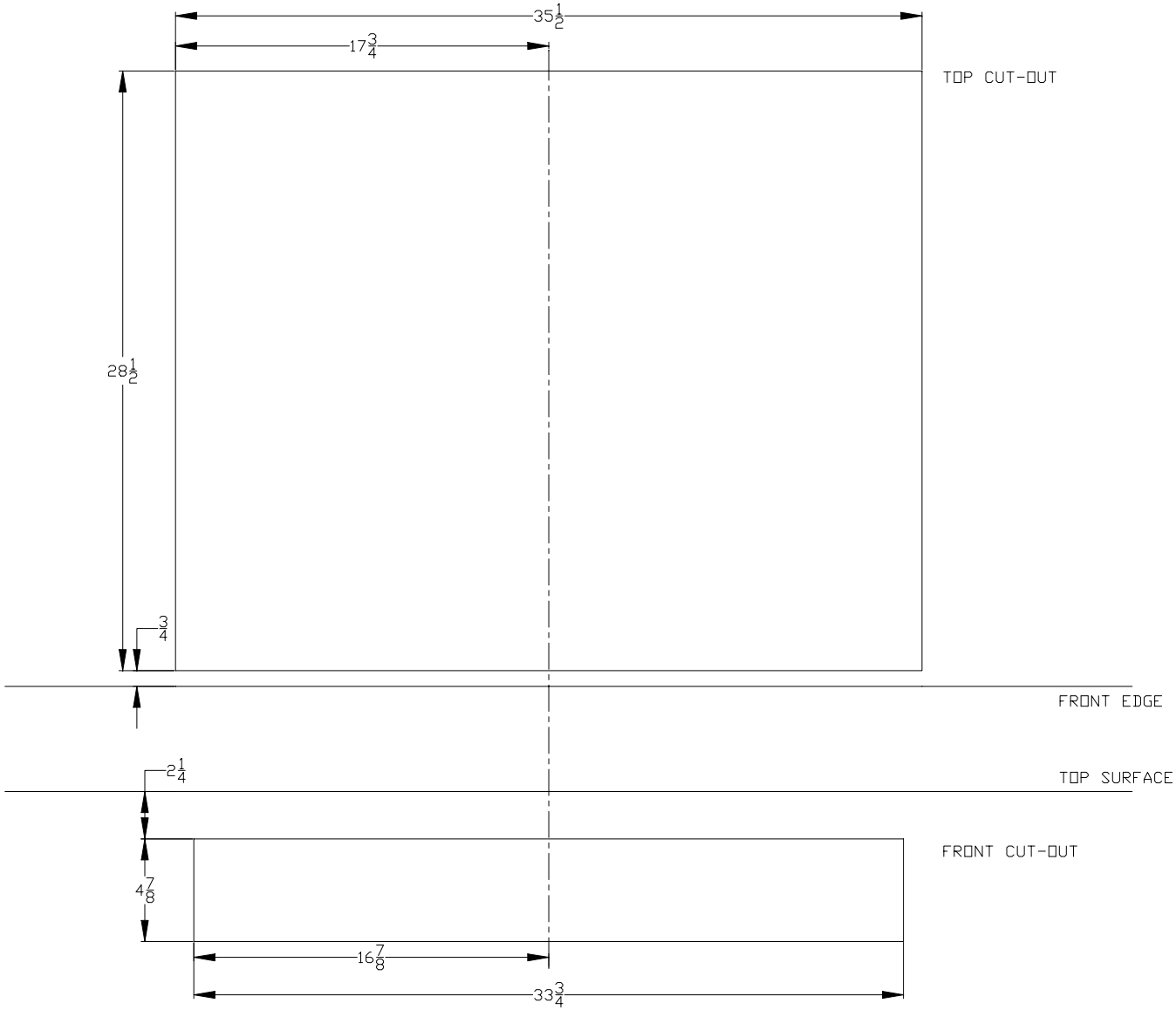

MDI-48 CUT OUT

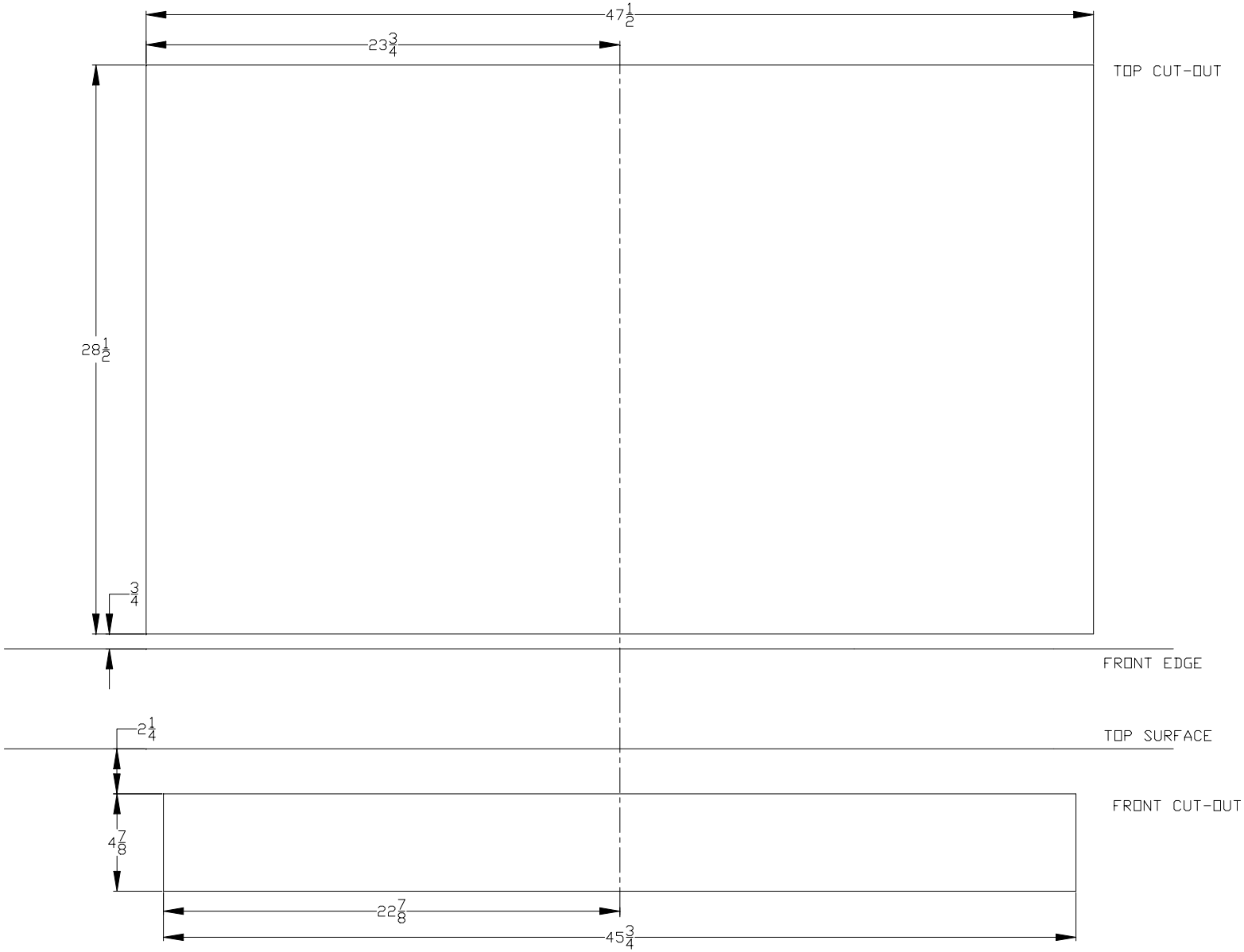

MDI-72 CUT OUT

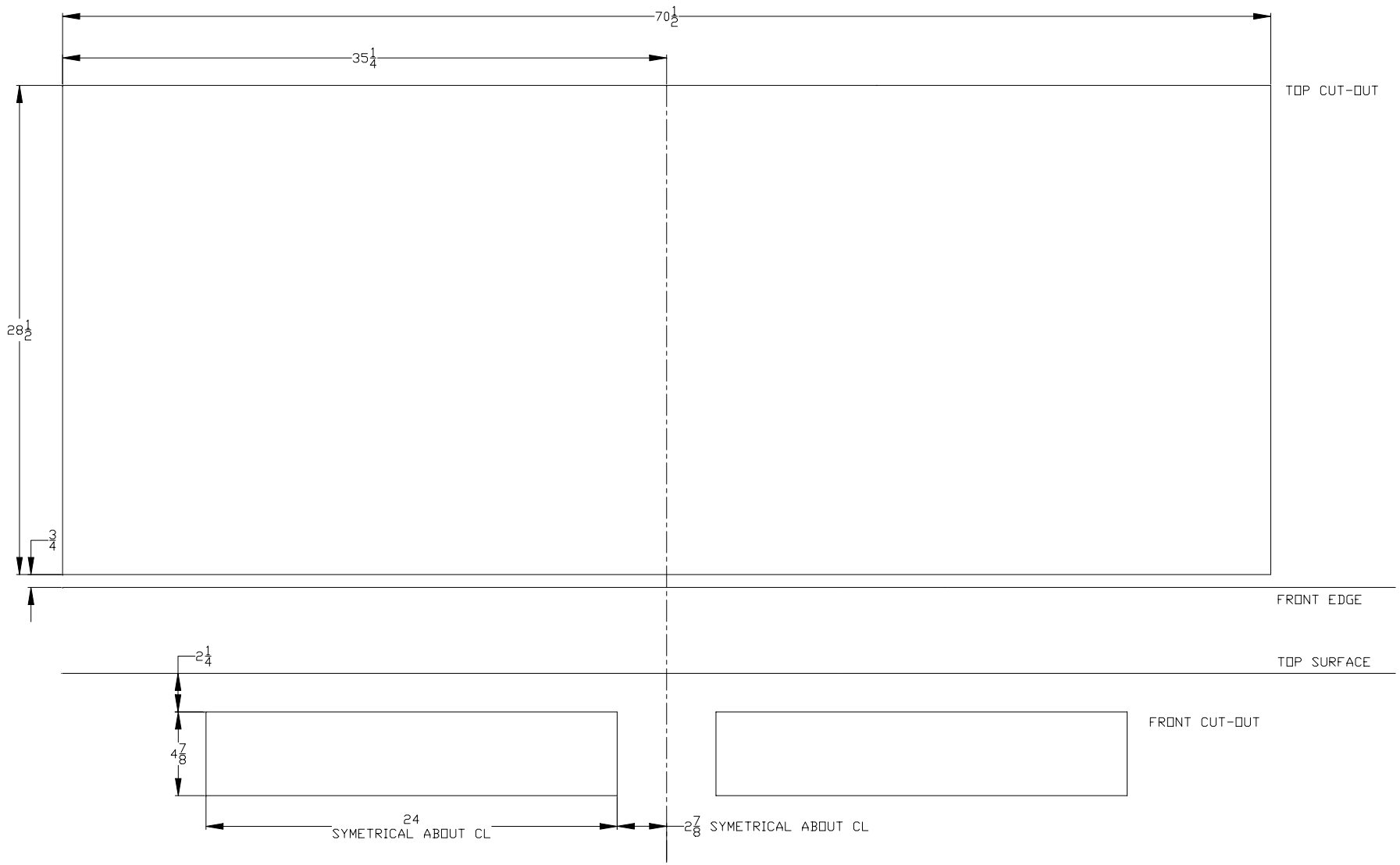

EQUIPMENT DESCRIPTION

INTRODUCTION

This manual contains the necessary information to install, operate, maintain, and service the Lang self-heating electric griddles.

Replacement parts should be genuine Lang parts. Failure to use genuine Lang replacement parts may result in malfunction of the appliance or possible injury to the contractor or service technician.

PURPOSE AND FUNCTION

Electric griddles provide heated surface constantly regulated at a thermostatically set temperature. They are designed to cook a wide variety of food products including, but not limited to, eggs, hamburgers, fish, chicken and pancakes.

CAPABILITIES

These griddles are capable of cooking all types of products requiring contact wit a heated surface.

ENVIRONMENTAL REQUIREMENTS

The following minimum spacing from combustible surfaces must be maintained:

Sides – 2 inches, Back – 2 inches

ITEMS FURNISHED (Listed by Type and Style)

Type I Griddle
Size 2, 5, 6
1 ea. Griddle
4 ea. Legs
2 ea. Manuals, Technical

Type I Griddle
Size 3
1 ea. Griddle
8 ea. Legs
2 ea. Manuals, Technical

Type II Griddle
Style 1
1 ea. Griddle
1 ea. Stand
1 ea. Stand Hardware
2 ea. Manuals, Technical

Type II Griddle
Style 2
1 ea. Griddle
1 ea. Stand
1 ea. Stand Hardware
2 ea. Swivel Casters
2 ea. Rigid Casters
2 ea. Manuals, Technical

Type II Griddle
Style 3

1 ea. Griddle
1 ea. Bolt Down Stand
1 ea. Stand Hardware
2 ea. Manuals, Technical

Type III Griddle
Size 1 & 6

1 ea. Griddle
1 ea. Griddle Control Panel
2 ea. Manuals, Technical

Type III Griddle
Size 3

1 ea. Griddle
2 ea. Griddle Control Panel
2 ea. Manuals, Technical

ITEMS REQUIRED

An adequate supply of wire suitable for the loads and application specified on the data sheet must be provided. The data sheet is on Page 4 of this manual.

TOOLS AND TEST EQUIPMENT REQUIRED

For Installation:

1 set – Open End Wrenches
1 ea. – Flat Blade Screwdriver
1 ea. – Phillips Screwdriver
1 ea. – Wire Cutter/Stripper
1 ea. – AMP Probe
1 ea. – Voltmeter

For Service: All of the above plus –

1 ea. – Needle Nose Pliers
1 ea. – Crimping Pliers
1 ea. – Allen Wrench Set
1 ea. – Temperature Meter
1 ea. – Very Small Flat Blade Screwdriver

CONTROLS

A mechanical snap action thermostat (100°F-450°F) controls each 12" section of the griddle.

A red indicator lamp indicates that the griddle is heating.

CAUTION: **THE GRIDDLE IS EXTREMELY HEAVY. FOR SAFE HANDLING, INSTALLER SHOULD OBTAIN HELP AS NEEDED, OR EMPLOY APPROPRIATE MATERIALS HANDLING EQUIPMENT (SUCH AS A FORKLIFT, DOLLY, OR PALLET JACK) TO REMOVE THE UNIT FROM THE SKID AND MOVE IT TO THE PLACE OF INSTALLATION.**

CAUTION: **ANY STAND, COUNTER OR OTHER DEVICE ON WHICH GRIDDLE WILL BE LOCATED MUST BE DESIGNED TO SUPPORT THE WEIGHT OF THE OVEN(S).**

CAUTION: **SHIPPING STRAPS ARE UNDER TENSION AND CAN SNAP BACK WHEN CUT.**

DANGER: **THIS APPLIANCE MUST BE GROUNDED AT THE TERMINAL PROVIDED. FAILURE TO GROUND THE APPLIANCE COULD RESULT IN ELECTROCUTION AND DEATH.**

WARNING: **INSTALLATION OF THE UNIT MUST BE DONE BY PERSONNEL QUALIFIED TO WORK WITH ELECTRICITY. IMPROPER INSTALLATION CAN CAUSE INJURY TO PERSONNEL AND/OR DAMAGE TO EQUIPMENT. UNIT MUST BE INSTALLED IN ACCORDANCE WITH ALL APPLICABLE CODES.**

NOTICE: **The data plate is located next to the grease drawer, behind access panel. The griddle voltage, wattage, serial number, wire size, and clearance specifications are on the data plate. This information should be carefully read and understood before proceeding with the installation.**

NOTICE: **The installation of any components such as a vent hood, grease extractors, fire extinguisher systems, must conform to their applicable National, State and locally recognized installation standards.**

INSPECTION AND INSTALLATION

Upon receipt, check for freight damage, both visible and concealed. Visible damage should be noted on the freight bill at the time of delivery and signed by the carrier's agent. Concealed loss or damage means loss or damage which does not become apparent until the merchandise has been unpacked. If concealed loss or damage is discovered upon unpacking, make a written request for inspection by the carrier's agent within 15 days of delivery. All packing material should be kept for inspection. Do not return damaged merchandise to Lang Manufacturing Company. File your claim with the carrier.

LOCATION

Move the crate(s) containing the oven(s) as close to the place of installation as possible before removing the protective crating. Uncrate the oven(s) and move them as close as practical to the final installation site.

TYPE I

Screw legs into the 3/8-16 weld nuts provided on the underside of the griddle.

Place the griddle into its intended location.

A 1 1/4-inch conduit knockout through the back and the bottom of the griddle body is located at the rear of the griddle. A 3-pole terminal block is provided for service connections and can be accessed through a removable panel on the back of the griddle. Use a supply wire suitable for at least 90 degree centigrade.

Sizes 2, 5, and 6 have one electrical connection and size 3 has two electrical connections.

TYPE II

Construct stand and place into its intended location.

For bolt down legs see illustration below for dimensions.

Carefully place griddle onto its stand.

Electric connection can be made at the rear of the griddle.

Sizes 2, 5, and 6 have one electrical connection and size 3 has two electrical connections.

TYPE III

Carefully cut the countertop and the control panel cutouts to the clearance dimensions shown on the cutout illustrations.

The griddle will have a control box and a griddle portion. Disconnect as necessary.

Block the griddle over the hole in the top of the counter and put the gasket in place under the flange that will support the griddle.

Position the control boxes close to there installed position. Attach the thermostat capillary tubes to the griddle.

Drop the griddle into place and twist the hold-downs around the edge of the griddle that is now below the counter to lock the griddle in place.

A separate box with a terminal block is provided for power connections.

The griddle may now be connected to power

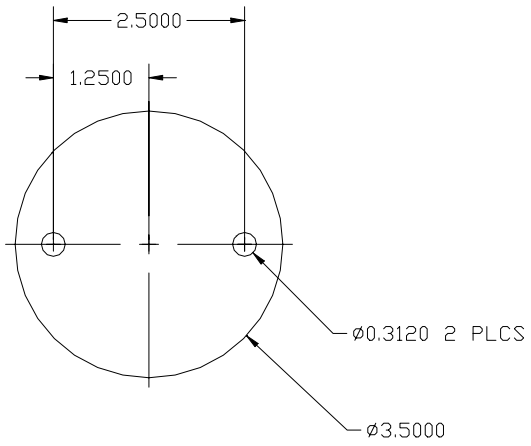

NOTICE: **During the first few hours of operation you may notice a small amount of smoke coming off the griddle surface, and a faint odor from the smoke. This is normal for a new griddle and will disappear after the first few hours of use.**

CAUTION: **ALWAYS KEEP THE AREA NEAR THE APPLIANCE FREE FROM COMBUSTIBLE MATERIALS.**

CAUTION: **KEEP FLOOR IN FRONT OF EQUIPMENT CLEAN AND DRY. IF SPILLS OCCUR, CLEAN IMMEDIATELY, TO AVOID THE DANGER OF SLIPS OR FALLS.**

OPERATING INSTRUCTIONS

An understanding of how the griddle sections are controlled will be a valuable aid in loading your griddle.

Each 12-inch section of your griddle is independently controlled by a temperature controller. The temperature control sensor is mounted in the center of each cooking section under the griddle plate.

If the product is loaded directly over the temperature sensor, that section will turn on and the burner will heat the entire cooking section. If the product is loaded to the side, front or back of the temperature sensor, the thermostat will react to the temperature change much slower.

During slow periods with minimal loads, do not load directly over the thermostat sensors as this will unnecessarily turn the burners on and overheat the remainder of the section not being utilized.

Turn the product and continue cooking until it has reached its desired degree of doneness.

Remove the product from the griddle.

When reloading the griddle, first use the griddle surface on which a previous load was not placed. This will help insure the proper griddle temperature.

INITIAL START-UP

Prior to putting any griddle into full time operation at normal cooking temperatures, it must be thoroughly "seasoned" and dried out. Moisture absorption in the closed spaces, in the insulation and even inside the heating elements can cause future trouble if not properly treated.

Before seasoning the griddle it is first necessary to remove the shipping preservative from the griddle surface. To do this, add a mild detergent to hot water and wash the griddle plate. Rinse with a damp sponge and dry with a clean rag.

To "season" the griddle, set the thermostat dial to 300°. Allow unit to come up to temperature and cycle off. Apply a thin coat of high-grade, non-salted vegetable oil to the griddle surface. Rub the oil into the griddle surface with the flat side of a spatula or a towel. Re-coat any dry spots that appear then wait 30 minutes and wipe off any excess oil. Repeat these steps at 350°, 400°, and 450°.

To “dry out” the Griddle, set the thermostat to 250° and turn on the power switch. Allow the unit to cycle at least 15 minutes at this heat level. Reset the thermostat to 350° allowing the same time. Reset the thermostat to 450° and allow the unit to maintain the temperature for a minimum of 4 hours. More time may be required if the unit will be operating in a moist or humid environment.

If the unit is out of use for three or more days, a one-hour preheat schedule should be used, especially when exposed to high humidity and/or cool temperatures.

NORMAL OPERATION

Each 12-inch section of your griddle is independently controlled by a temperature controller. The temperature control sensor is mounted in the center of each cooking section under the griddle plate.

Turn the griddle thermostat to the desired temperature and allow 30 minutes to preheat.

Once griddle has been preheated place product on the griddle and allow to cook.

MAINTENANCE AND CLEANING

WARNING: **KEEP WATER AND SOLUTIONS OUT OF CONTROLS. NEVER SPRAY OR HOSE CONTROL CONSOLE, ELECTRICAL CONNECTIONS, ETC.**

CAUTION: **MOST CLEANERS ARE HARMFUL TO THE SKIN, EYES, MUCOUS MEMBRANES AND CLOTHING. PRECAUTIONS SHOULD BE TAKEN TO WEAR RUBBER GLOVES, GOGGLES OR FACE SHIELD AND PROTECTIVE CLOTHING. CAREFULLY READ THE WARNING AND FOLLOW THE DIRECTIONS ON THE LABEL OF THE CLEANER TO BE USED.**

NOTICE: **Service on this, or any other, LANG appliance must be performed by qualified personnel only. Consult your authorized service station directory or call the factory at 1-800-224-LANG (5264), or WWW.LANGWORLD.COM For the service station nearest you.**

WARNING: **BOTH HIGH AND LOW VOLTAGES ARE PRESENT INSIDE THIS APPLIANCE WHEN THE UNIT IS PLUGGED/WIRED INTO A LIVE RECEPTACLE. BEFORE REPLACING ANY PARTS, DISCONNECT THE UNIT FROM THE ELECTRIC POWER SUPPLY.**

CAUTION: **USE OF ANY REPLACEMENT PARTS OTHER THAN THOSE SUPPLIED BY LANG OR THEIR AUTHORIZED DISTRIBUTORS CAN CAUSE BODILY INJURY TO THE OPERATOR AND DAMAGE TO THE EQUIPMENT AND WILL VOID ALL WARRANTIES.**

DAILY CLEANING

Empty the grease drawer or whenever it is 3/4 full by pulling strait out toward the front. It is easily removed for washing.

Clean the exterior of the appliance with Lang Mfg. Prima Shine (72804-41) cleaner to maintain a gleaming appearance.

Keep the griddle surface clean. After each cooking load, scrape the griddle surface to remove any carbonized grease

WEEKLY CLEANING

Once a week (or when necessary) the griddle surface should be cleaned and re-seasoned. Use Lang Mfg Carbon Release (72804-32). Rub with the grain of the metal, being careful not to scrape the splashguard.

Be sure to rinse thoroughly and re-season to prevent rusting and corrosion.

CALIBRATION CHECK

Set the griddle temperature to 350°F on all sections (it should take approximately 22 minutes to reach temperature).

Let the griddle reach 350°F and cycle off and on at least three times.

Measure 6" from the left, and 11 1/2" from the front of the plate for the first checkpoint. This will check the center of the sensor for the first cooking section.

Each checkpoint is located every 12" to the right from the last point, and always 11 1/2" from the front. (See illustration below.)

CALIBRATION

A 1/16" flat blade screwdriver with a 2" shaft is required to make adjustments on the thermostat.

Maintain the oven temperature at 350°.

Without turning the thermostat, remove the knob.

Locate the adjustment screw at the base of the shaft and insert the screwdriver.

Grasp the shaft and turn the screwdriver counter clockwise to increase temperature and clockwise to decrease temperature (1/8 of a turn will move the temperature 5-7 ° in either direction).

Reinstall the oven knob and recheck the oven temperature.

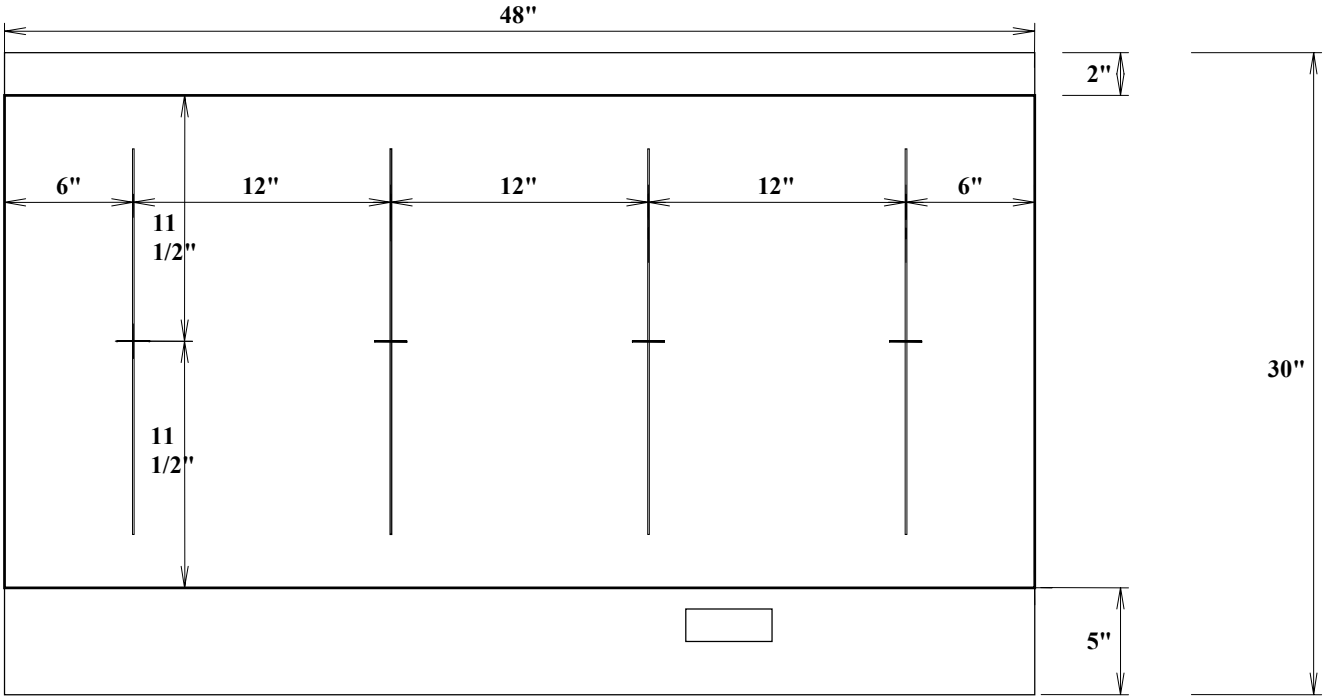

ELEMENT REMOVAL

Disconnect power from griddle.

Prop griddle plate up.

Disconnect power wire attached to heating element terminals. Mark or identify each wire to ensure correct replacement on new heating element. Inspect for frayed ends, broken strands and grease soaked insulation. Replace as necessary.

Remove the two sheet metal screws securing the thermostat capillary tube clip to the element pan. Pull the clip and the tube down and out of the center slot of the element pan. Take care not to break the capillary tube, as it may be brittle from prolonged exposure to high temperature.

Remove the nuts and washers retaining the element pan and pressure plate.

Drop the element pan straight down until studs are cleared and pull forward out of griddle body. The elements will normally drop down with the element pan and are now accessible for replacement as necessary.

Compare voltage and wattage marking of old element with new one to ensure proper replacement.

Reverse the removal procedure to install the new element. Be sure the nuts holding the element pan are snug as this will assure proper contact between the element and griddle plate. The capillary tube bulb must also be tightly clamped against the griddle plate to obtain proper temperature control.

THERMOSTAT REPLACEMENT

Disconnect power from griddle.

Prop griddle plate up.

Loosen the two sheet metal screws securing the thermostat capillary tube clip to the element pan. Gently pull the thermostat capillary tube from the clip.

Remove the two sheet metal screws from the rear of the control panel box and pull off the box cover.

Remove thermostat control knob. Loosen and remove the two screws securing the thermostat body to the front panel. Remove wires from thermostat terminals. Mark for proper replacement.

Reverse this procedure for replacement.

PILOT INDICATOR REPLACEMENT

Disconnect power from griddle.

Prop griddle plate up.

Remove the two sheet metal screws from the rear of the control panel box and pull off the box cover.

Remove the wires from the pilot indicator.

The pilot light is held firmly in place by means of a spring metal speed nut on the back. Remove the pilot indicator by removing the speed nut and pulling it out through the front. It may be necessary to break the pilot light in two to remover he speed nut.

Install the new pilot light and hold in place with speed nut.

Reverse the procedure to reinstall.

SYMPTOM	PROBLEM	REMEDY
Whole griddle will not heat	Circuit breaker turned off Griddle not turned on Improper connection Improperly Phased	Turn on Turn on Connect per wiring diagram Phase per wiring diagram
One section will not heat.	Defective elements Defective thermostat	Replace elements Replace thermostat
Griddle is burning product	Griddle is out of calibration	Calibrate
Griddle is undercooking product	Griddle is out of calibration	Calibrate
Indicator light will not come on	Defective Indicator light	Replace Indicator light

TECHNICAL DATA

Part#	Description	Volts	Watts	Amps
11030-29	I/S Element	208/240	4500/5991	22/26
11030-30	O/S Element	208	1491	8
11030-31	Element	480	5991	12.5
11030-04	Element	380	5991	16

GRIDDLE LINE AMPERAGE, AND WATTAGE

Type: I, II, III		TOTAL K.W.	NOMINAL AMPS PER LINE									SINGLE PHASE	
			THREE PHASE										
			208 Volt			240 Volt			480 Volt			208V	240V
			L1	L2	L3	L1	L2	L3	L1	L2	L3		
24”		12.0	50.0	28.8	28.8	43.3	25.0	25.0	21.7	12.5	12.5	57.7	50.0
36”		18.0	50.0	50.0	50.0	43.3	43.3	43.3	21.7	21.7	21.7	86.5	75.0
48”		24.0	75.0	75.0	50.0	65.0	65.0	43.3	32.5	32.5	21.7	115.4	100.0
72”	#1	18.0	50.0	50.0	50.0	43.3	43.3	43.3	21.7	21.7	21.7	86.5	75.0
	#2	18.0	50.0	50.0	50.0	43.3	43.3	43.3	21.7	21.7	21.7	86.5	75.0

208/240 WIRING DIAGRAM

REVISION BLOCK						
REV	ECN NO.	DESCRIPTION	DR:	MFG	ENG	DATE

ELEMENT HOOKUP	
208V	240V
INSTALL JUMPER ④	REMOVE JUMPER ④

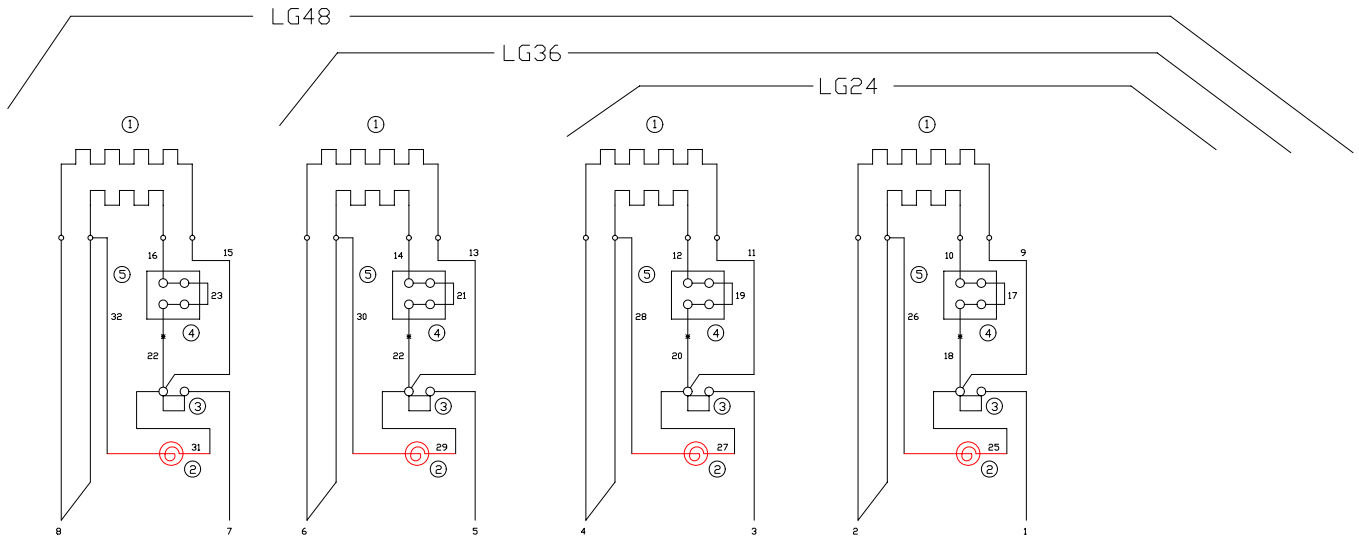

① GRIDDLE ELEMENTS
② GRIDDLE PILOT LAMP
③ GRIDDLE THERMOSTAT
④ JUMPER
⑤ TERMINAL BLOCK

NOTE: LG72 HAS TWO POWER SUPPLY CONNECTIONS
LG72: CONN # 1 USE LG36
CONN # 2 USE LG36

SERVICE CONNECTIONS

THREE PHASE			SINGLE PHASE	
L1	L2	L3	L1	L2
1,4	2	3	1,3	2,4
1,4	2,5	3,6	1,3,5	2,4,6
1,4,7	2,5,8	3,6	1,3,5,7	2,4,6,8

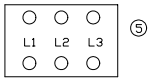

QTY	ITEM	PART NUMBER	DESCRIPTION / MATERIAL

LANG MANUFACTURING

DR: SRC DATE:
CK: DATE:

TOLERANCES
FRACTIONS ± 1/64 DECIMALS .X ± .05
ANGLES ± .5° .XX ± .03
.XXX ± .015
UNLESS OTHERWISE SPECIFIED DIMENSIONS ARE IN INCHES

SCALE: N/A

TITLE: LANG GRIDDLE

208 – 240VAC

NEXT HIGHER ASSY.

SHEET 1 OF 1

DRAWING NUMBER 61114–01

REV D

480 WIRING DIAGRAM

REVISION BLOCK						
REV	ECN NO.	DESCRIPTION	DR:	MFG	ENG	DATE

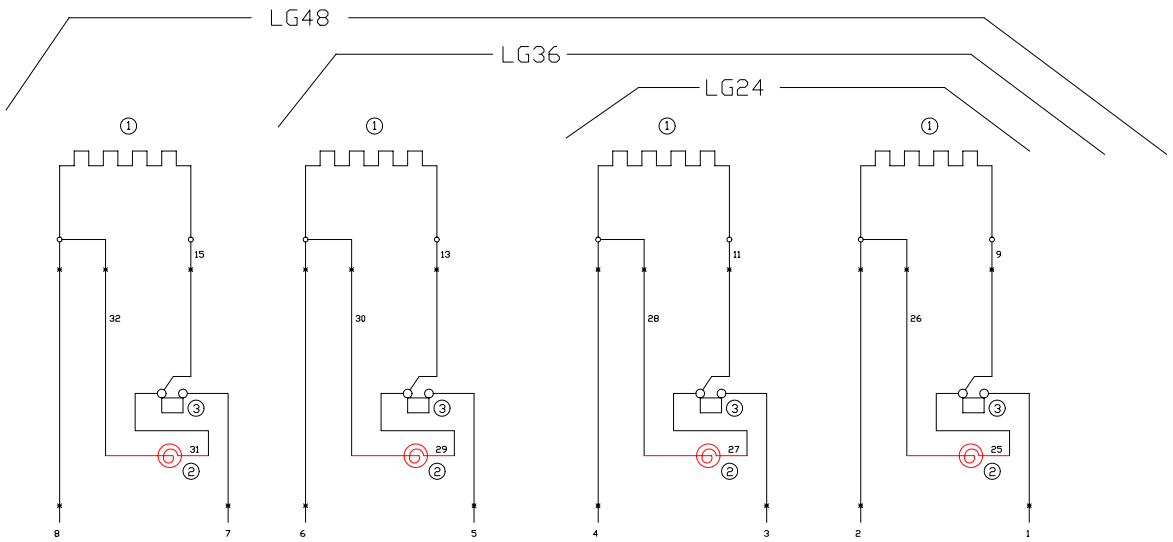

1. GRIDDLE ELEMENTS
2. GRIDDLE PILOT LAMP
3. GRIDDLE THERMOSTAT
4. TERMINAL BLOCK

NOTE: LG72 HAS TWO POWER SUPPLY CONNECTIONS
LG72: CONN # 1 USE LG36
CONN # 2 USE LG36

SERVICE CONNECTIONS			
MODEL	THREE PHASE		
	L1	L2	L3
24	1,4	2	3
36	1,4	2,5	3,6
48	1,4,7	2,5,8	3,6

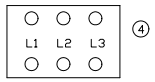

* NUMBER

QTY	ITEM	PART NUMBER	DESCRIPTION / MATERIAL

LANG MANUFACTURING

DR: SRC DATE:
CK: DATE:

TOLERANCES
FRACTIONS ± 1/64
DECIMALS .X ± .05 .XX ± .03 .XXX ± .015
ANGLES ± .5°
UNLESS OTHERWISE SPECIFIED DIMENSIONS ARE IN INCHES

SCALE: N/A

TITLE: LANG GRIDDLE

480VAC 3 PHASE

NEXT HIGHER ASSY.

SHEET 1 OF 1

DRAWING NUMBER 61114-02

REV B

Item #	Description	Lang Part #	Vendor	Vendor #
1A	Element, 208V / 1491 Watts I/S	11030-30	Caloritech Inc.	IXI-11030-30
1B	Element, 208/240V / 4500/6000 Watts O/S	11030-29	Caloritech Inc.	IXI-11030-29
1C	Element, 380V / 6000 Watts	11030-04	Caloritech Inc.	IXI-11030-04
1D	Element, 440V / 6000 Watts	11030-48	Caloritech Inc.	IXI-11030-48
1E	Element, 480V / 6000 Watts	11030-31	Caloritech Inc.	IXI-11030-31
2	Thermostat, 450° F.	30402-08	Invensys	SP-173-72
3A	Terminal Strip, 4 pole (Type I & II, Size 5)	30500-02	Cooper-Bussman	TB30004-00
3B	Terminal Strip, 6 pole (Type I & II, Size 2 & 3)	30500-03	Cooper-Bussman	TB30006
3C	Terminal Strip, 8 pole (Type I & II, Size 6)	30500-05	Cooper-Bussman	TB30008
4	Terminal Block, 3 pole	30500-07	All-West Fasteners	162-04-3L
5A	Indicator Light, 208/240V	31601-01	Solico	2152-1-23-20110
5B	Indicator Light, 480V	31601-02	Solico	1854-1-20-20310
6	Element Pan Assembly	50302-05	Lang Mfg	50302-05
7A	Knob, 450° Thermostat (Type I & II)	70701-19	Lang Mfg.	70701-19
7B	Knob, 450° Thermostat (Type III)	70701-16	Lang Mfg.	70701-16
8A	Grease Drawer (Type I & II)	50302-07	Lang Mfg	50302-07
8B	Grease Drawer (Type III, Size 2 & 6)	MDI-212-2	Lang Mfg	MDI-212-2
8C	Grease Drawer (Type III, Size 3)	MDI-212-6	Lang Mfg	MDI-212-6
9A	Grab Bar Assembly (Type I & II, Size 5)	50302-14	Lang Mfg	50302-14
9B	Grab Bar Assembly (Type I & II, Size 2)	50302-15	Lang Mfg	50302-15
9C	Grab Bar Assembly (Type I & II, Size 6)	50302-16	Lang Mfg	50302-16
9D	Grab Bar Assembly (Type I & II, Size 3)	50302-18	Lang Mfg	50302-18
10A	Griddle Plate Assembly (Type I & II, Size 5)	XL-722-2	Lang Mfg	XL-722-2
10B	Griddle Plate Assembly (Type I & II, Size 2)	XL-722-3	Lang Mfg	XL-722-3
10C	Griddle Plate Assembly (Type I & II, Size 6)	XL-722-4	Lang Mfg	XL-722-4
10D	Griddle Plate Assembly (Type I & II, Size 3)	XL-722-6	Lang Mfg	XL-722-6
10E	Griddle Plate Assembly (Type III, Size 2)	MDI-105-3	Lang Mfg	MDI-105-3
10F	Griddle Plate Assembly (Type III, Size 6)	MDI-105-4	Lang Mfg	MDI-105-4
10G	Griddle Plate Assembly (Type III, Size 3)	MDI-105-6	Lang Mfg	MDI-105-6
11	Griddle Cleaning Tool	50100-05	Chef Aid MFG	50100-05
11A	Griddle Cleaning Tool (Replacement Fingers)	50100-051	Chef Aid MFG	50100-051
11B	Griddle Cleaning Tool (Replacement Blades)	50100-052	Chef Aid MFG	50100-052