Form No. 3408-159 Rev C

Universal Groomer Drive Kit

Greensmaster® Flex™ 1800 and 2100, eFlex® 1800 and 2100 or Greensmaster® 3000 Series DPA Cutting Units

Model No. 04648

Installation Instructions

This product complies with all relevant European directives. For details, please see the Declaration of Incorporation (DOI) at the back of this publication.

Note: If you are installing this kit on a Greensmaster 3250 traction unit, you will need the Pull Link kit, 112-9248. If you are installing this kit on a Greensmaster 3050, 3100, 3120, or 3150 traction unit, you will need the Pull Link kit, 106-2643.

Introduction

Read this information carefully to learn how to operate and maintain your product properly and to avoid injury and product damage. You are responsible for operating the product properly and safely.

You may contact Toro directly at www.Toro.com for product and accessory information, help finding a dealer, or to register your product.

Whenever you need service, genuine Toro parts, or additional information, contact an Authorized Service Dealer or Toro Customer Service and have the model and serial numbers of your product ready. Figure 1 identifies the location of the model and serial numbers on the product. Write the numbers in the space provided.

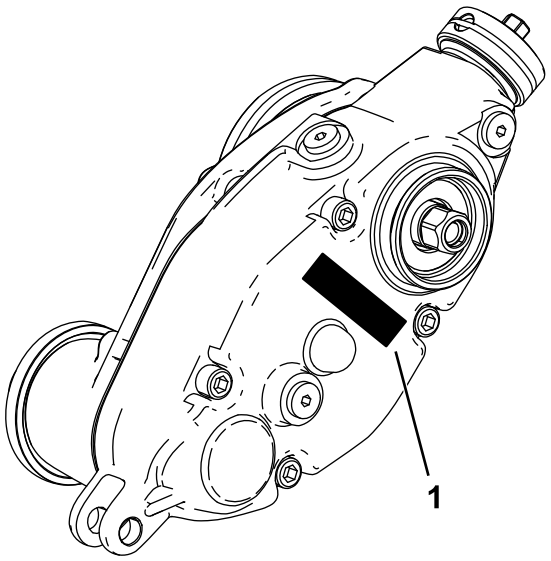

g241111

Figure 1

1. Model and serial number location

Model No. _____

Serial No. _____

© 2018—The Toro® Company
8111 Lyndale Avenue South
Bloomington, MN 55420

Register at www.Toro.com.

CE

Original Instructions (EN)
Printed in the USA
All Rights Reserved

3408-159 C

Loose Parts

Use the chart below to verify that all parts have been shipped.

Procedure	Description	Qty.	Use
1	No parts required	–	Prepare the machine.
2	No parts required	–	Prepare the cutting unit.
3	No parts required	–	Remove the drive-belt assembly.
4	Weight Torx-socket screw Locknut Right reel adapter (silver) Left reel adapter (black) Shim washer Groomer drive box	1 2 2 1 1 1 1	Install the groomer drive box and weight.
5	Stub-shaft assembly Bearing shield Idler assembly Adjuster collar Flange nut	1 2 1 1 1	Install the idler assembly.
6	Groomer pin	2	Install the groomer pin.
7	Left height-of-cut bracket assembly Right height-of-cut bracket assembly Adjuster pin Cotter pin	1 1 2 2	Install the HOC assemblies and the front roller.
8	Bolt (1/4 to 1 1/2 inches) Jam nut Shaft clamp	4 4 4	Install the groomer assembly (ordered separately).

1

Preparing the Machine

No Parts Required

Procedure

1. Park the machine on a level surface.
2. Engage the parking brake.
3. Shut off the engine and remove the key or spark plug; refer to your *Operator's Manual*.

2

Preparing the Cutting Unit

No Parts Required

Procedure

1. Separate the cutting unit from the traction unit; refer to the *Operator's Manual* for the traction unit.
2. On the cutting unit, loosen the mounting screws securing each end of the front roller to the height-of-cut arms (Figure 2).

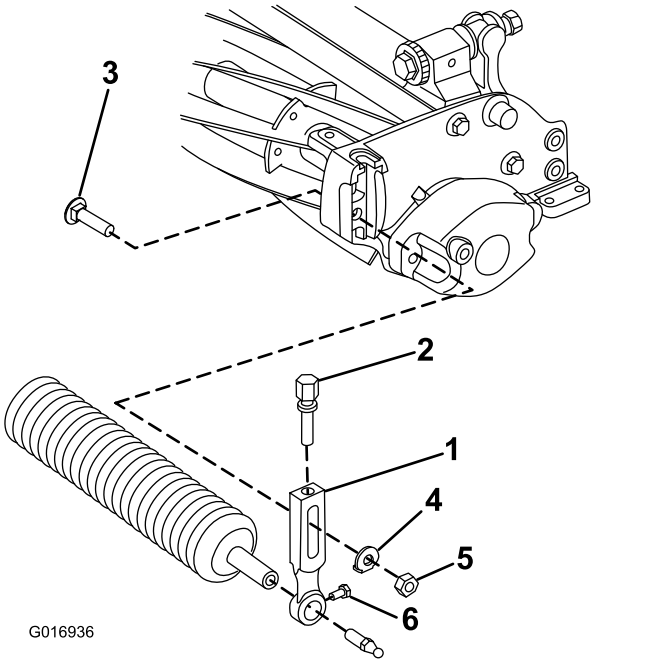

Figure 2

1. Height-of-cut arm
2. Adjusting screw
3. Plow bolt
4. Washer
5. Flange nut
6. Roller-mounting screw

3. Remove the plow bolts, washers, and locknuts securing the height-of-cut arms to each end of cutting unit (Figure 2). Remove the height-of-cut arms and roller assembly.

   Note: Save the removed hardware to install the new height-of-cut arms.

4. Remove the height-of-cut adjusting screws and roller-mounting screws from the height-of-cut arms (Figure 2).

   Note: Save the roller mounting screws and the roller for later installation.

5. **If you are installing the kit on a cutting unit of a TriFlex hybrid machine**, remove the 2 cap screws that secure the electrical counterweight to the reel, and remove the counterweight (Figure 3).

   Note: Retain the electrical counterweight and 2 cap screws for installation in Preparing the Counterweight (page 5).

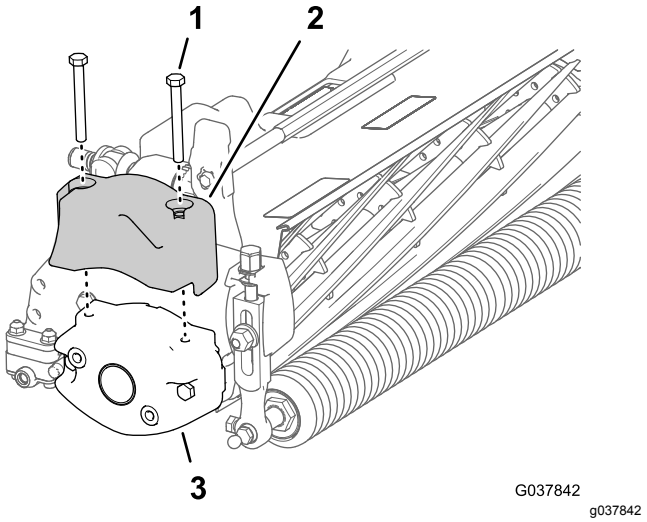

Figure 3

Cutting Unit—Hybrid TriFlex Machine

1. Cap screws (5/16 x 2-3/4 inches)
2. Counterweight (electric reel drive—hybrid TriFlex machine)
3. Counterweight (cutting unit)

6. Remove the 2 bolts (5/16 x 2-1/4 inches) from the 2 nuts (captive by the side plate) securing the counterweight on the side plate of the cutting unit. Remove the counterweight (Figure 4).

   Note: You may discard the cutting unit counterweight and the mounting bolts.

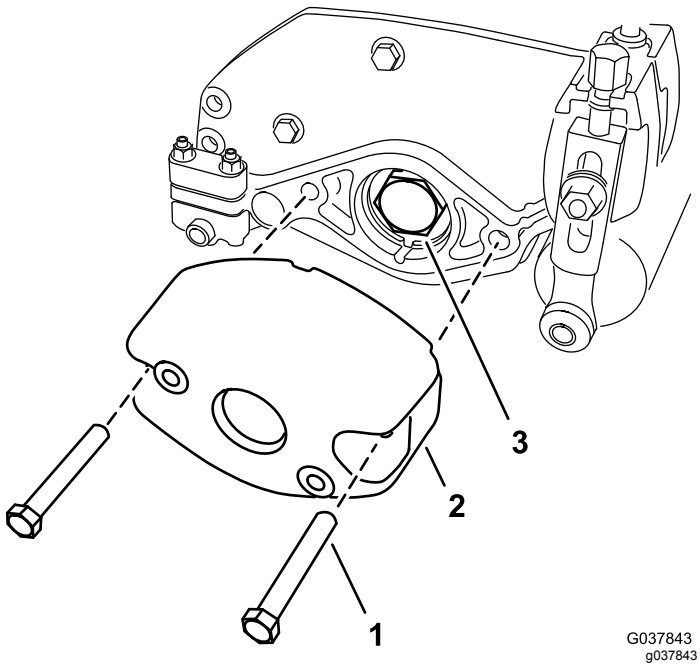

Figure 4

1. Bolt (5/16 x 2-1/4 inches)
2. Counterweight (reel-cutting unit)
3. Bearing nut

7. Remove the bearing nut from the reel shaft (Figure 4).

   Important: **Clean the threads in the end of the reel shaft of any debris or grease before installing the kit splined insert and groomer box.**

8. **If you are installing the kit on a Triflex machine**, remove the 2 bolts securing the motor mount to the cutting unit. Remove the motor mount (Figure 5).

   Note: Retain the bolts and nuts for later installation.

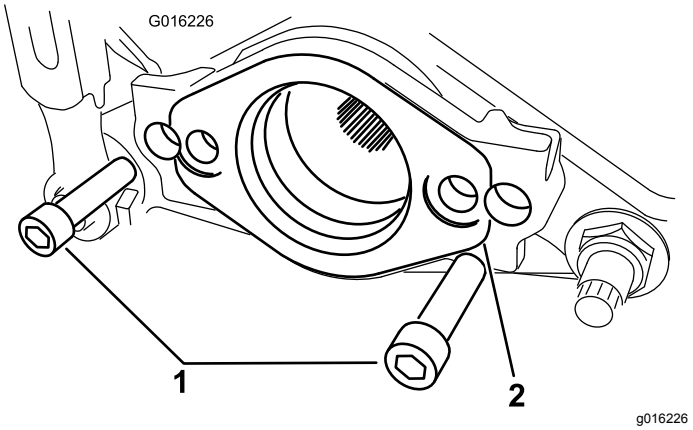

Figure 5

1. Bolts
2. Motor mount

3

Removing the Belt-Drive Assembly

Walk-Behind Greensmowers

No Parts Required

Procedure

Note: Retain all parts in this section except where noted.

1. Loosen the captive bolt securing the belt cover to the cutting unit until you can remove the cover (Figure 6).

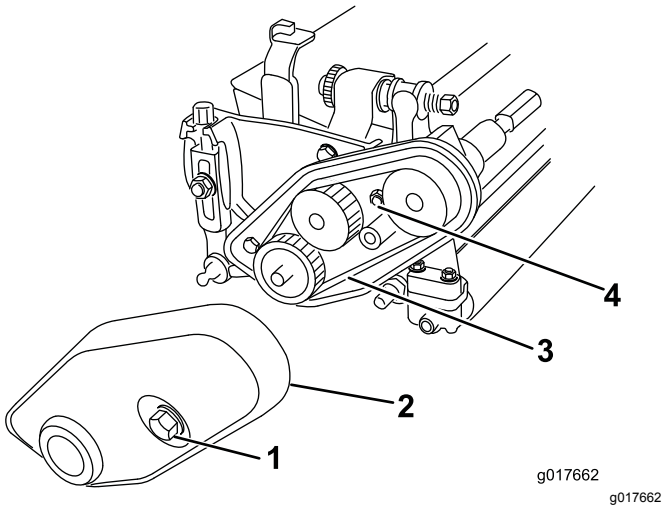

g017662

Figure 6

1. Belt-cover bolt (captive)
2. Belt cover
3. Belt
4. Belt-tensioning nut

2. Loosen the belt-tensioning nut and remove the belt (Figure 6).
3. Loosen the 2 set screws securing the lower pulley and remove the pulley from the reel shaft (Figure 7).

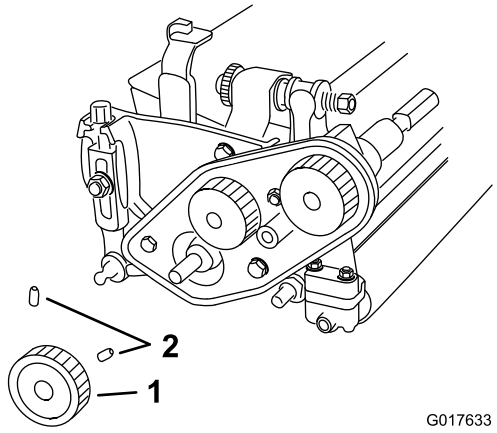

Figure 7

1. Lower pulley
2. Set screws

4. Remove the 3 bolts securing the belt-drive assembly to the cutting unit, if equipped, and remove the whole assembly (Figure 8).

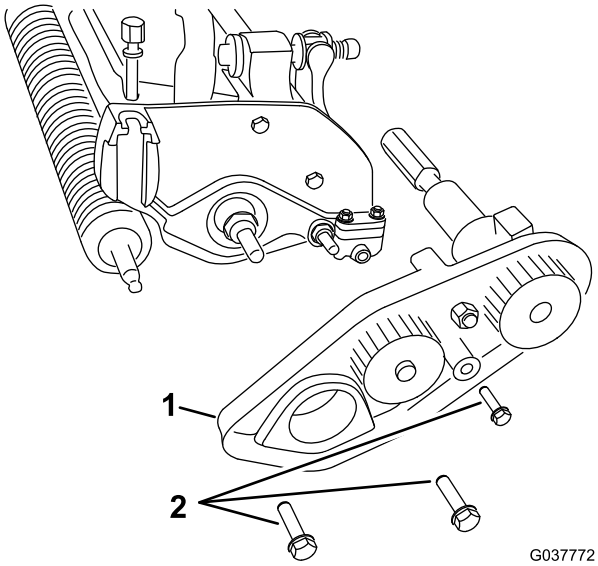

Figure 8

1. Belt-drive assembly
2. Bolt

4

Installing the Counterweight and Groomer Drive Box

Parts needed for this procedure:

1	Weight
2	Torx-socket screw
2	Locknut
1	Right reel adapter (silver)
1	Left reel adapter (black)
1	Shim washer
1	Groomer drive box

Preparing the Counterweight

TriFlex Machines with an Electric Reel-Cutting Unit

1. Assemble the electric counterweight and 2 cap screws (5/16 x 2-3/4 inches) that you removed in step 5 of 2 Preparing the Cutting Unit (page 2) to the new weight (Figure 9).

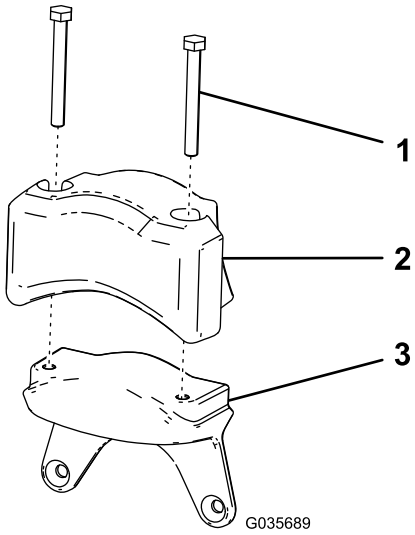

Figure 9

1. Cap screw (5/16 x 2-3/4 inches)
2. Electrical counterweight
3. New weight

2. Torque the bolts to 198 to 254 N·m (175 to 225 in-lb).

Installing the Counterweight

1. Secure the new weight to the side of the cutting unit using 2 bolts (5/16 inch) and 2 nuts (5/16 inch) as shown in Figure 10.

   Note: Attach the weight to the side of the cutting unit on which you intend to mount the groomer drive box.

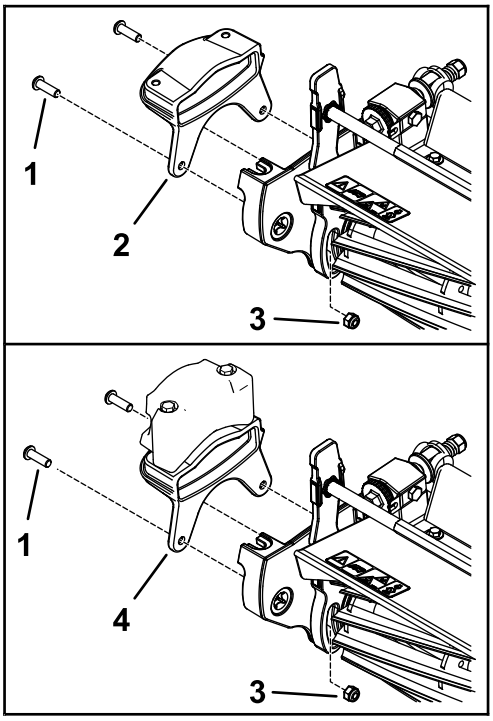

g244756

Figure 10

1. Torx-socket screw (5/16 x 1-1/4 inches)
2. Counterweight
3. Locknut (5/16 inch)
4. Counterweight (TriFlex machines with an electric cutting unit)

2. Torque the screws and locknuts to 20 to 26 N·m (175 to 225 in-lb).

Installing the Groomer Drive Box

1. Apply medium-strength thread-locking compound (such as Blue Loctite® 243) to the internal threads of the drive-box shaft and torque the reel adapter and groomer drive-box shaft to 150 to 163 N·m (110 to 120 ft-lb).

   Note: Use the silver adapter if you installed the counterweight at the right side of the cutting unit. Use the black reel adapter if you installed the counterweight at the left side of the cutting unit.

   Important: **Clean the threads in the end of the reel shaft of any debris or grease before installing the kit splined insert.**

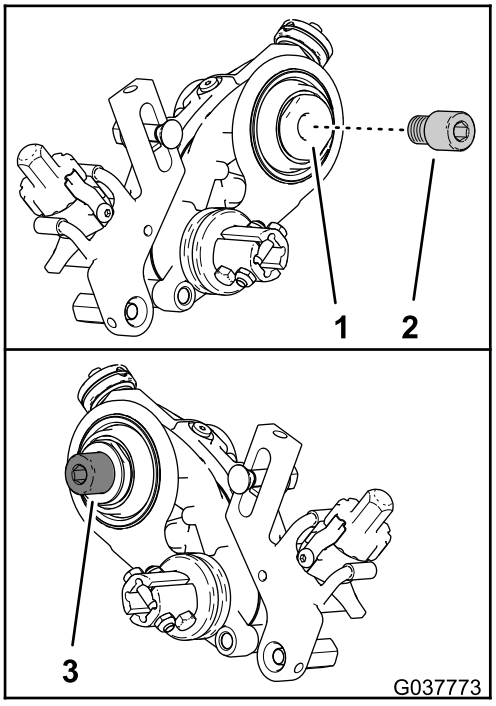

g037773

Figure 11

1. Groomer drive-box shaft
2. Reel adapter—**silver** (groomer drive-box and counterweight at the **right** side of the cutting unit)
3. Reel adapter—**black** (groomer drive-box and counterweight at the **left** side of the cutting unit)

Important: **Allow the thread-locking compound to cure for 15 minutes before continuing the procedure.**

Note: When torquing the reel adapter and drive-box shaft, restrain the drive-box shaft with a wrench on the wrench flats at the inboard side of the groomer drive box (Figure 12).

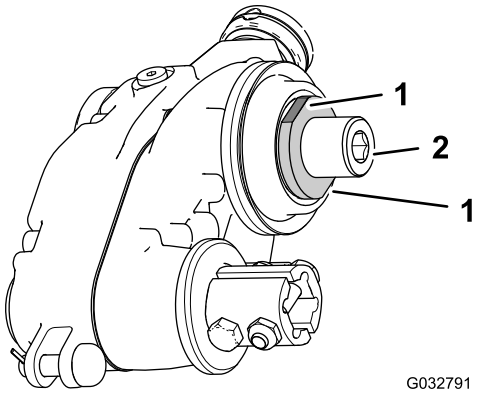

g032791

Figure 12

1. Wrench flats (drive-box shaft)
2. Hex socket (reel adapter)

2. For a groomer drive box installed at the left side of the cutting unit, assemble the shim washer over the threads of the black reel adapter (Figure 13).

   Note: No shim washer is installed with groomer drive box installed at right side of the cutting unit.

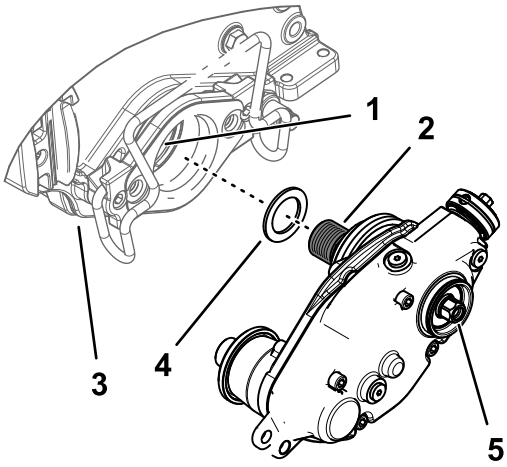

g232600

Figure 13

1. Apply thread-locking compound
2. Reel adapter (black) into reel shaft
3. Cutting unit
4. Shim washer
5. Hex-head

3. Apply medium-strength thread-locking compound (such as Blue Loctite® 243) to the internal threads of the reel shaft threads.
4. Attach the groomer drive box to the reel shaft (Figure 10).

   Important: **The splined insert on the left side of the cutting unit has left-hand threads. The splined insert on the right side of the cutting unit has right-hand threads.**
5. Using a block of wood or having another person restrain the reel, torque the hex-head drive of the drive-box shaft to 135 to 150 N·m (100 to 110 ft-lb); refer to Figure 14.

   Important: **You must torque the torque hex drive of the drive-box shaft to 135 to 150 N·m (100 to 110 ft-lb).**

   Important: **You must use a 6-point socket with heavy wall.**

   Important: **Do not use an impact wrench for this step.**

   Important: **Allow the thread-locking compound to cure for 15 minutes before continuing the procedure.**

   Note: Do not damage the seal under the outer cover.

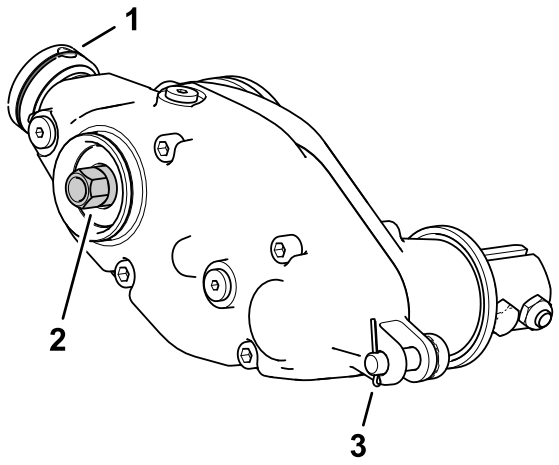

g244758

Figure 14

1. O-ring
2. Hex-socket screw (5/16 x 1/2 inch)
3. Cotter pin

Note: The clutch-knob assembly comes installed from the factory for a right drive installation.

6. If you are installing the groomer at the left side of the machine, perform the following:
   A. Remove the O-ring from the clutch knob (Figure 15).
   B. Remove the shear pin that secures the clutch knob to the actuator shaft (Figure 15).
   C. Remove the clutch-knob assembly and flip it over.
   D. Assemble the clutch knob to the actuator shaft with the shear pin (Figure 15).
   E. Install the O-ring into the groove in the clutch knob.

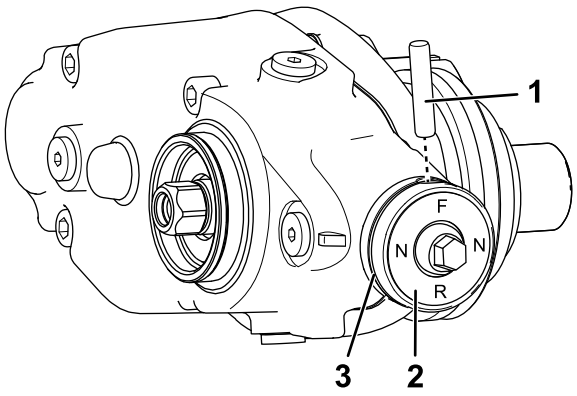

g244757

Figure 15

1. Shear pin
2. Clutch-knob assembly
3. O-ring

5

Installing the Idler Assembly

Parts needed for this procedure:

1	Stub-shaft assembly
2	Bearing shield
1	Idler assembly
1	Adjuster collar
1	Flange nut

Procedure

1. Assemble the loose parts to the idler assembly as shown in Figure 16.

   Note: Install parts 1 through 5 in reverse if you are installing the idler assembly on the opposite side in Figure 16.

   Important: **Install the bearing shields with the fabric side toward the bearings.**

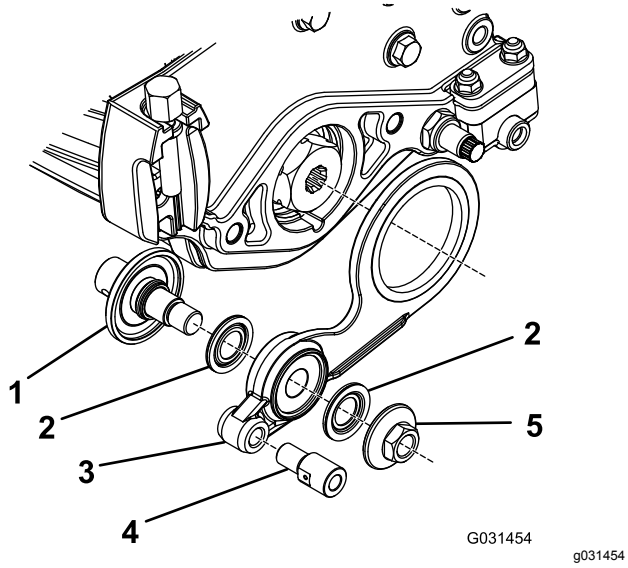

Figure 16

Left side shown

1. Stub-shaft assemby
2. Bearing shield
3. Idler assembly
4. Adjuster collar—torque to 23 to 31 N·m (17 to 23 ft-lb)
5. Flange nut—torque to 37 to 45 N·m (27 to 33 ft-lb)

2. Remove the motor mount.
3. Position the idler assembly on the opposite side of the reel from the groomer drive box.
4. **If you are installing the kit on a cutting unit of a TriFlex machine**, proceed to step 5. **If you are installing the kit on the cutting unit of a walk-behind greensmower**, perform the following steps:

   A. Install the belt-drive assembly to the cutting unit using the 3 bolts that you removed previously (Figure 8).

   B. Install the pulley to the reel shaft using the 2 set screws that you removed previously (Figure 7); torque the set screws to 8.4 to 8.9 N·m (74 to 79 in-lb).

   C. Install the belt and tighten the belt-tensioning nut (Figure 6).

   D. Install the belt cover and tighten the captive bolt (Figure 6).

5. **If you are installing the kit on a cutting unit of a TriFlex machine**, install the motor mount to the left end of the cutting unit using the 2 bolts that you removed previously (Figure 5).
6. Torque the bolts to 20 to 26 N·m (175 to 225 in-lb).

6

Installing the Groomer Pins

Greensmaster 3120, 3150, and 3250D

Parts needed for this procedure:

2	Groomer pin

Procedure

1. Apply removable thread-locking compound to the hole for the groomer pin if it is not present on the groomer-pin threads.
2. Secure the groomer pin to the height-of-cut arm (Figure 17).

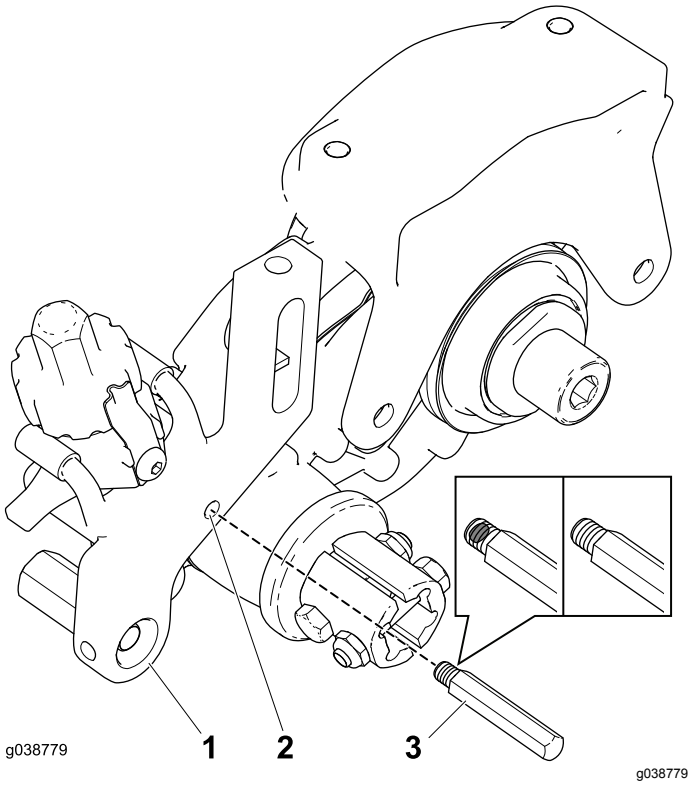

Figure 17

1. Height-of-cut arm
2. Hole
3. Groomer pin (shown with or without removable thread-locking compound)

3. Perform this procedure to the opposite side.

7

Installing the Height-of-Cut Bracket Assemblies and the Front Roller

Parts needed for this procedure:

1	Left height-of-cut bracket assembly
1	Right height-of-cut bracket assembly
2	Adjuster pin
2	Cotter pin

Procedure

1. Thread the previously removed height-of-cut adjusting screws into the top of the height-of-cut assemblies (Figure 18).

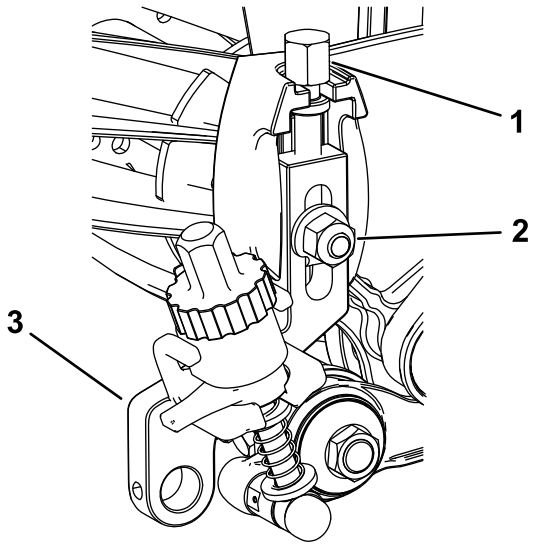

Figure 18

1. Height-of-cut adjusting screw
2. Plow bolt, nut, and special washer
3. Height-of-cut bracket assembly

2. Install the height-of-cut assemblies to the cutting unit side plates using the previously removed plow bolt, nut, and special washer (Figure 18).
3. Slide the adjuster-arm assembly rod near the groomer drive box into the gap on the drive box and secure it with an adjuster pin and cotter pin (Figure 19).

Note: Make sure that you bend the legs of the cotter pin so that the pin does not fall out of the adjuster pin.

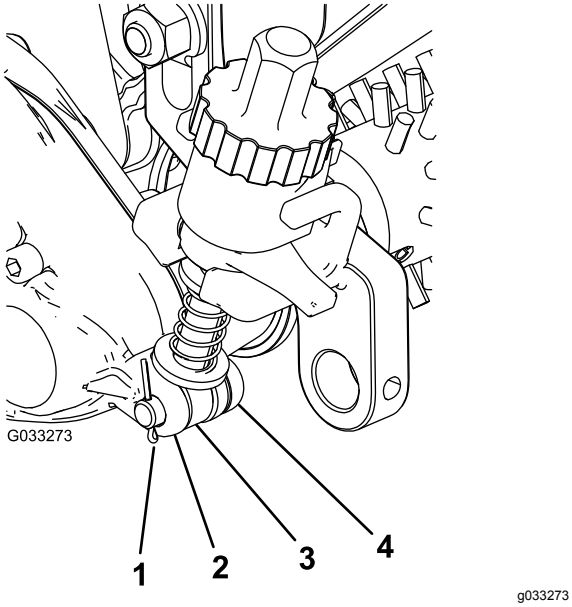

g033273

Figure 19

1. Cotter pin
2. Groomer drive box
3. Adjuster-arm assembly rod
4. Adjuster pin

4. Align the adjuster-arm assembly rod near the idler assembly with the adjuster collar on the idler assembly and secure it with an adjuster pin and cotter pin (Figure 20).

   Note: Make sure that you bend the legs of the cotter pin so that the pin does not fall out of the adjuster pin.

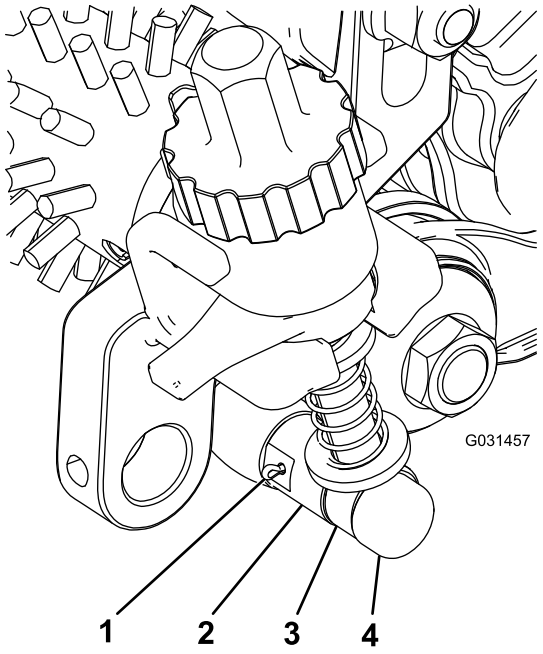

g031457

Figure 20

1. Cotter pin
2. Adjuster collar
3. Adjuster-arm assembly rod
4. Adjuster pin

5. Insert and center the front roller shaft between the height-of-cut brackets and secure it with the 2 mounting screws removed from the old height-of-cut brackets (Figure 21).

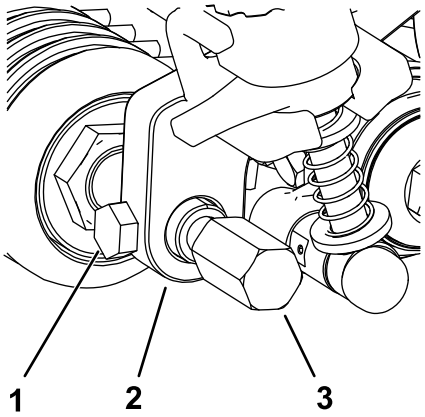

g231793

Figure 21

1. Mounting screw
2. Height-of-cut bracket assembly
3. Groomer guard

6. Attach the groomer guards to either side of the front roller shaft (Figure 21).
7. Torque the groomer guards to 22 to 24 N·m (16 to 18 ft-lb).

8

Installing the Groomer

Parts needed for this procedure:

4	Bolt (1/4 to 1 1/2 inches)
4	Jam nut
4	Shaft clamp

Procedure

1. Obtain a groomer reel appropriate for your needs and cutting unit; refer to the following list of available groomer reels:
   - 18-inch groomer, spring steel (with 1/2 inch spacing)
   - 18-inch groomer, carbide
   - 18-inch soft grooming brush
   - 18-inch stiff grooming brush
   - 18-inch thin-spring steel groomer (with 1/4 inch spacing)
   - 21-inch groomer, spring steel (with 1/2 inch spacing)
   - 21-inch groomer, carbide
   - 21-inch soft grooming brush
   - 21-inch stiff grooming brush
   - 21-inch thin-spring steel groomer (with 1/4 inch spacing)
2. Line up the groomer with the groomer drive box and idler assembly (Figure 22).

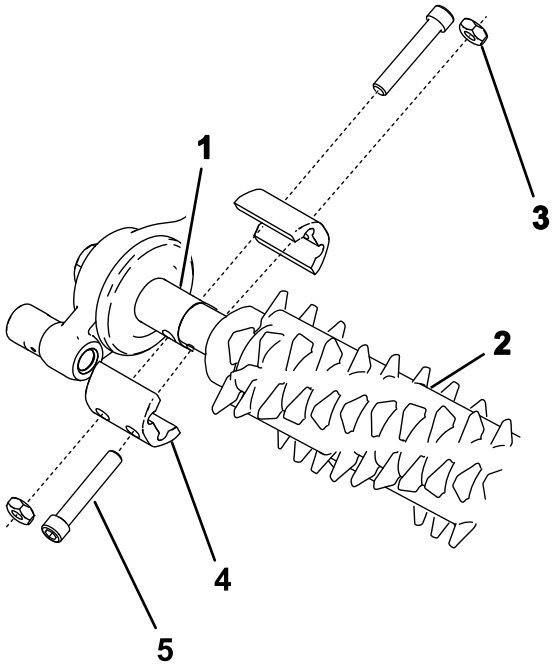

g240752

Figure 22

1. Drive-stub shaft
2. Groomer assembly
3. Jam nut (4)
4. Shaft clamp (4)
5. Bolt (4)

3. Secure the groomer to the machine as shown in Figure 22 and snug the bolts.
4. To prevent binding, set the height of cut and height of groom, then loosen the bolts.

   Note: To set the height of cut refer to your cutting unit *Operator's Manual*; refer to Adjusting the Groomer Height (page 13) for adjusting the height of groom.
5. Torque the bolts to 5 to 7 N·m (46 to 60 in-lb).
6. Check and adjust height of cut and height of groom as necessary.

Operation

Note: Determine the left and right sides of the machine from the normal operating position.

Introduction

Grooming is performed in the turf canopy above the soil level. Grooming promotes vertical growth of grass plants, reduces grain, and severs stolons, producing a denser turf. Grooming produces a more uniform and tighter playing surface for faster and truer action of the golf ball.

Grooming should not be considered as a replacement for verticutting. Verticutting is generally a more rigorous and periodic treatment that can temporarily damage the playing surface, while grooming is a routine and gentler treatment designed to manicure the turf.

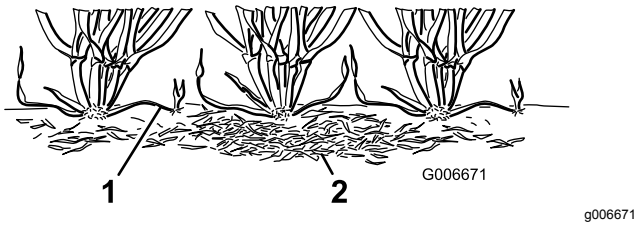

Figure 23

1. Grass runners (stolons) 2. Thatch

Grooming brushes are less intrusive than conventional grooming blades when adjusted to lightly contact the turf canopy. Brushing may be better for the ultra-dwarf cultivars, since these grass types have an upright growth pattern and do not fill in well through horizontal growth. Brushes can injure leaf tissue if they are set to penetrate too deeply into the canopy.

Groomer blades should never penetrate the soil. They are effective in cutting runners and removing thatch.

Because grooming injures leaf tissue, avoid grooming during periods of high stress. Cool season species, such as creeping bent grass and annual bluegrass, should not be groomed during high-temperature (and high-humidity) periods in midsummer.

Many variables affect the performance of grooming, including:

- The time of the year (i.e., the growing season) and the weather pattern
- The general condition of each green
- The frequency of grooming/cutting—both how many cuttings per week and how many passes per cutting
- The height-of-cut setting on the main reel
- The height/depth setting on the grooming reel
- How long the grooming reel has been in use on the green
- The type of grass on the green
- The overall greens management program (i.e., irrigation, fertilizing, spraying, coring, overseeding, etc.)
- Traffic
- Stress periods (i.e., high temperatures, high humidity, unusually high traffic)

These factors can vary from green to green. Inspect the greens frequently and change the grooming practice as needed.

Various grooming shaft assemblies are available. The 13 mm (1/2 inch) spacing allows you to groom slightly deeper to cut stolons without thinning out the turf excessively. By removing spacers and adding blades or by adding spacers and removing blades, you can adjust the spacing between the groomer and blade to 6 mm (1/4 inch) or 19 mm (3/4 inch).

Note: Groom with a 6 mm (1/4 inch) blade spacing for fast-growth periods (spring through early summer) to thin out the top layer of the canopy. Groom with a 19 mm (3/4 inch) blade spacing for slower growth periods (late summer through fall and winter). During high-stress periods, you may use the grooming reel.

Note: Using the groomer reel improperly or too aggressively (i.e., too deep or too frequent grooming) may unnecessarily stress the turf, causing severe turf damage. Use the groomer cautiously.

Note: Continue changing the direction of cut whenever you use the groomer. This enhances the effects of the grooming.

Note: Operate the groomer in a straight line as much as possible. Use caution when turning while operating the groomer.

Adjusting the Groomer Height

Use the following chart, figures, and procedure to set the groomer height/depth.

Number of rear-roller spacers required	Height of cut (HOC)	Height-of-grooming range (HOG)
0	1.5 mm (0.06 inch)	0.8 to 1.5 mm (0.03 to 0.06 inch)
	3.0 mm (0.12 inch)	1.5 to 3.0 mm (0.06 to 0.12 inch)
	4.8 mm (0.19 inch)	2.3 to 4.8 mm (0.09 to 0.19 inch)
	6.4 mm (0.25 inch)	3.0 to 6.4 mm (0.12 to 0.25 inch)
1	7.9 mm (0.31 inch)	3.8 to 7.9 mm (0.15 to 0.31 inch)
	9.7 mm (0.38 inch)	4.6 to 9.7 mm (0.18 to 0.38 inch)
2	11.2 mm (0.44 inch)	5.3 to 11.2 mm (0.21 to 0.44 inch)
	12.7 mm (0.50 inch)	6.4 to 12.7 mm (0.25 to 0.50 inch)
3	15.9 mm (0.625 inch)	9.4 to 15.9 mm (0.37 to 0.625 inch)
4	19.1 mm (0.75 inch)	12.7 to 19.1 mm (0.50 to 0.75 inch)

Note: If you are using the groomer on an eFlex traction unit, note that the groomer causes the traction unit to deplete the battery faster than when not running the groomer. The deeper into the grass you set the groomer, the more power it requires and the faster the machine uses up the battery charge.

1. Ensure that the rollers are clean. Position the machine on a flat, level work surface.
2. Using the above chart, determine the amount of rear-roller spacers required to set the desired grooming height/depth.

   Note: If you are installing 3 or 4 spacers on each side of the rear roller, use the longer screws—included in the optional High Height of Groom Kit (Above 0.375 inch)—instead of the standard screws.
3. Set the height of cut of the main reel.
4. Using the chart, determine the position required to set the desired grooming height/depth. Raise or lower the grooming reel as follows:

   Important: **Never set the groomer lower that 1/2 the height of the cut—up to 13 mm (0.5 inch); you can make adjustments 0 to 6 mm (0 to 0.25 inch) below the height of cut thereafter.**

   Important: **If you set the groomer higher that the height of cut, inadvertent groomer contact with the basket may occur when using the QUICK-UP POSITION. Never set the groomer higher than the height of cut in the OPERATING position.**

   A. Rotate the quick-up levers (Figure 24) to the OPERATING position (the handle points toward the front of the cutting unit).

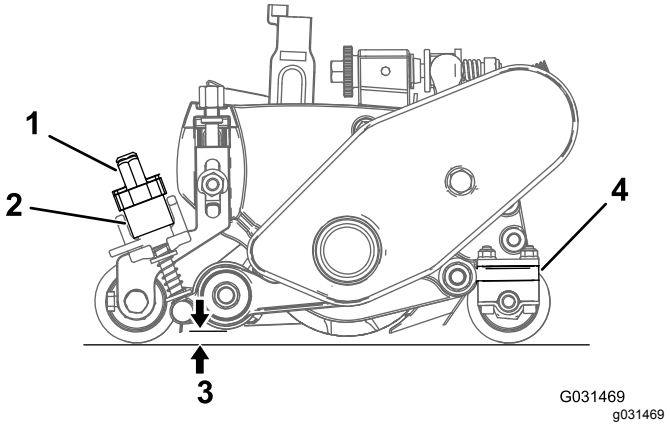

Figure 24

1. Height-adjuster knob
2. Quick-up lever (shown in the ENGAGED position)
3. Groomer height (HOG)
4. Number of rear-roller spacers (below side plate pad)

   B. At the end of the groomer reel, measure the distance from the lowest tip of the groomer blade to the working surface (Figure 24). Turn the height-adjuster knob (Figure 24) to raise or lower the tip of the groomer blade to the desired height.

   C. Repeat step B on the opposite end of the groomer, then check the setting on the first side of the groomer. The measured height at each end of the groomer reel must be identical. If the measured height at each end of the groomer is different, rotate the adjuster knob(s) until they are identical.

Changing the Groomer Operating Direction

The groomer has 3 settings: NEUTRAL, FORWARD, and REVERSE. To change the direction of the groomer, turn the knob at the end of the groomer drive box and align the desired position with the adjustment notch.

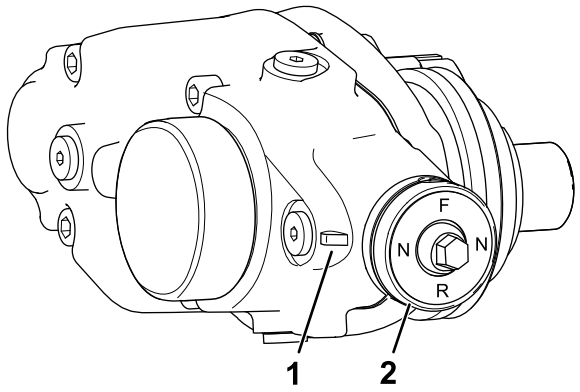

g240920

Figure 25

1. Adjustment notch
2. Knob

Testing the Groomer Performance

Important: **Improper or over-aggressive use of the grooming reel (i.e., too deep or too frequent grooming) may cause unnecessary stress on the turf, leading to severe greens damage. Use the groomer cautiously.**

⚠ DANGER

Contact with the reels or other moving parts can result in personal injury.

- **Before making any adjustments to the cutting units, disengage the reels, set the parking brake, shut off the engine, and remove the key.**
- **Keep your hands and clothing away from the reels or other moving parts.**

To determine the proper height/depth setting, do the following:

1. Set the cutting reel to the height of cut that would normally be used without a grooming reel.

   Note: Use a Wiehle roller and scraper for the front roller.

2. Set the groomer reel to the height-of-cut setting above the roller level.
3. Set the grooming brush equal to the height-of-cut setting above the roller.

   Note: Adjust the grooming brush (up or down) in 0.25 mm (0.01 inch) increments to avoid unintended turf damage.

4. Make a pass over the test green, then lower the grooming reel 1/2 the roller level and make another pass over the test green.

   Note: For example, to set a 3.2 mm (1/8 inch) height-of-cut, set the grooming reel at 1.6 mm (1/16 inch) above the roller.

5. Compare the results.

   Note: The first setting (when the groomer setting was adjusted to the height-of-cut setting above the roller level) should have removed significantly less grass and thatch than the second setting.

6. Check the test green 2 or 3 days after the first grooming for general condition or damage. If the groomed areas are turning yellow or brown, and the non-groomed areas are green, the grooming was too aggressive.

   Note: The color of the grass changes when you use the grooming reel. An experienced greens superintendent can judge by the color of the turf (along with close examination) if the current grooming practice is appropriate for the particular green. Because the groom reel stands up more grass and removes thatch, the quality of cut is not the same as without the groomer. This effect is most noticeable the first few times that you use a groomer on a green.

   Note: On multiple passes (i.e., double and triple cutting), the groomer penetrates deeper on each successive pass. Multiple passes are not recommended.

   After testing the performance of the groomer on a test green and you obtain satisfactory results, you can begin grooming on the playing greens. However, each green may respond differently to grooming. In addition, growing conditions constantly change. Inspect the groomed greens frequently and make adjustments to the grooming procedure as often as necessary.

Transporting the Machine

When you wish to mow without the groomer or need to transport the machine, raise the grooming reel into its raised transport position.

Maintenance

Changing the Gearbox Lubricant

Service Interval
After the first 100 hours
Every 500 hours / Yearly (Whichever comes first)

1. Clean the external surfaces of the groomer housing.

   Important: **Ensure that there is no dirt or clippings on the outside of the groomer housing; if debris gets inside of the groomer it can damage the gearbox.**
2. Remove the drain plug on the bottom of the housing (Figure 28).
3. Remove the fill plug on the side of the housing and loosen the air vent plug on the top so air can pass through (Figure 28).
4. Align a suitable container beneath the oil drain port to catch drained oil.
5. Tip the cutting unit vertically until the drain port is at the bottom to ensure complete drainage (Figure 26).

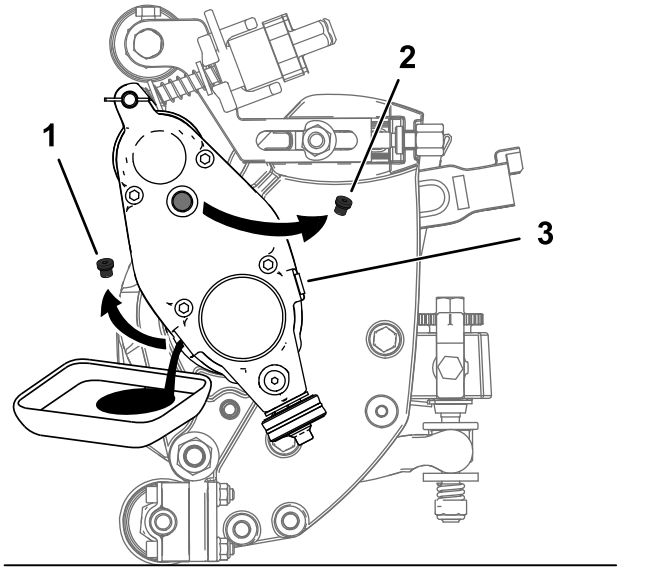

Figure 26

1. Remove the drain plug from the drain port.
2. Remove the fill plug from the fill port.
3. Loosen the air vent plug.

6. Rock the cutting unit back and forth to ensure complete drainage. When the oil is completely drained, place the cutting unit on a level surface.
7. Install the drain plug.
8. Use a syringe (Part No. 137-0872) to fill the drive box with 50 cc of 80-90W oil.

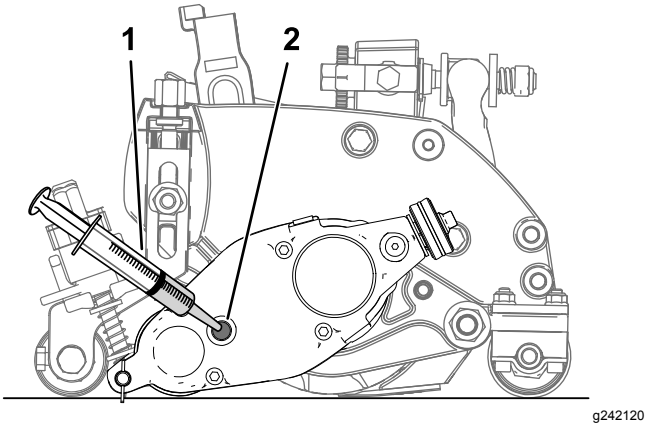

Figure 27

1. Syringe with 50 cc of 80-90W oil
2. Fill port

9. Install the fill plug and tighten the air-vent plug.
10. Torque all plugs to 3.62 to 4.75 N·m (32 to 42 in-lb).

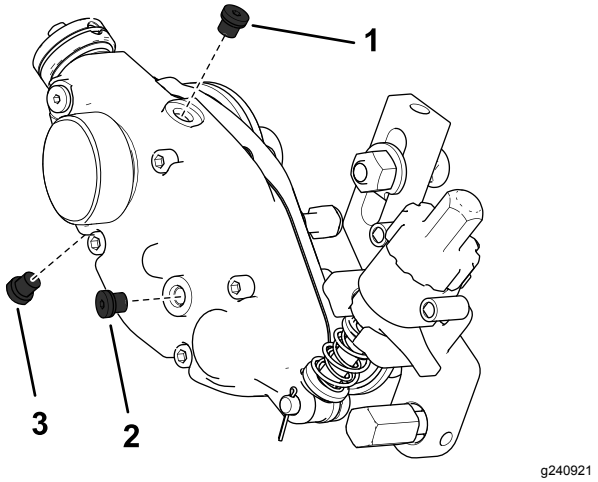

Figure 28
Left side shown

1. Air-vent plug
2. Fill plug
3. Drain plug

Cleaning the Grooming Reel

Service Interval: After each use

Clean off the grooming reel after using it by spraying it with water. Do not direct the water stream directly at the groomer bearing seals. Do not permit the grooming reel to stand in water so that the components rust.

Inspecting the Blades

Service Interval: Before each use or daily

Inspect the grooming-reel blades frequently for damage and wear. Straighten bent blades with a pliers. Replace worn blades, and torque the locknuts to 42 to 49 N·m (31 to 36 ft-lb). When inspecting the blades, check to see that nuts on the right and left blade-shaft ends are tight.

Note: If you are using spring steel blades, when 1 side of the blades become worn, remove the grooming reel, rotate it 180 degrees, and install it so that the unworn side is facing the direction of rotation.

Note: Because the groomer may introduce more debris (i.e., dirt and sand) into the cutting unit than what the reel would normally be exposed to, check the bedknife and main reel for wear more frequently. This is especially important in sandy soil and/or when the groomer is set for penetration.

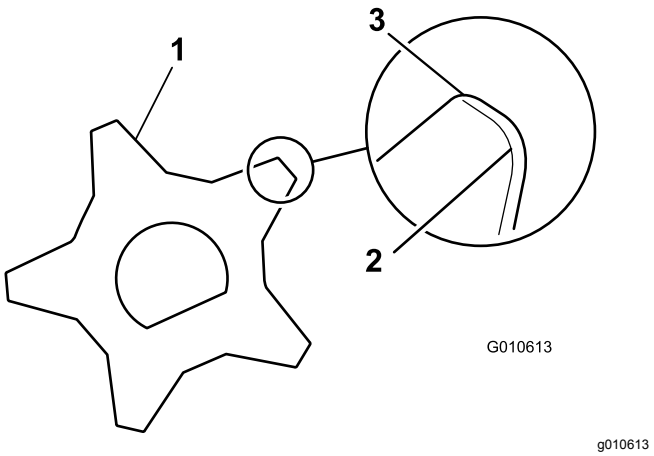

Figure 29

1. Grooming blade
2. Dull (rounded) edges
3. Sharp edges

Notes:

Notes:

Notes:

Declaration of Incorporation

The Toro Company, 8111 Lyndale Ave. South, Bloomington, MN, USA declares that the following unit(s) conform(s) to the directives listed, when installed in accordance with the accompanying instructions onto certain Toro models as indicated on the relevant Declarations of Conformity.

Model No.	Serial No.	Product Description	Invoice Description	General Description	Directive
04648	—	Universal Groomer Drive Kit, Greensmaster Flex 1800 and 2100, eFlex 1800 and 2100 or Greensmaster 3000 Series DPA Cutting Units	UNIV GROOMER DRIVE, NEWGEN DPA GREENS CU	Groomer Drive System	2006/42/EC

Relevant technical documentation has been compiled as required per Part B of Annex VII of 2006/42/EC.

We will undertake to transmit, in response to requests by national authorities, relevant information on this partly completed machinery. The method of transmission shall be electronic transmittal.

This machinery shall not be put into service until incorporated into approved Toro models as indicated on the associated Declaration of Conformity and in accordance with all instructions, whereby it can be declared in conformity with all relevant Directives.

Certified:



John Heckel
Sr. Engineering Manager
8111 Lyndale Ave. South
Bloomington, MN 55420, USA
October 4, 2018

Authorized Representative:

Marcel Dutrieux
Manager European Product Integrity
Toro Europe NV
Nijverheidsstraat 5
2260 Oevel
Belgium

Tel. +32 16 386 659