Form No. 3478-451 Rev A

TORO®

Count on it.

Operator's Manual

Vista® Lithium Shuttle Vehicle

Model No. 08924—Serial No. 418000000 and Up
Model No. 08924TC—Serial No. 418000000 and Up
Model No. 08926—Serial No. 418000000 and Up
Model No. 08928—Serial No. 418000000 and Up

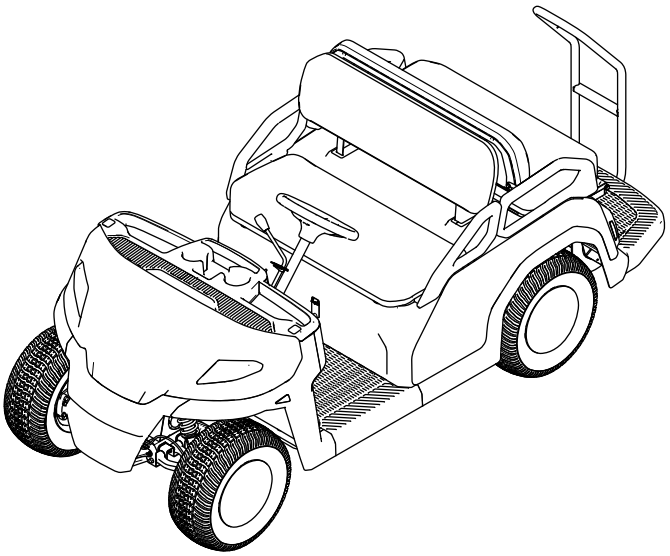

Register at www.Toro.com.
Original Instructions (EN)

CE UK CA

3478-451

This product complies with all relevant European directives; for details, please see the separate product specific Declaration of Conformity (DOC) sheet.

⚠ WARNING

CALIFORNIA
Proposition 65 Warning

The power cord on this product contains lead, a chemical known to the State of California to cause birth defects or other reproductive harm. Wash hands after handling.

Battery posts, terminals, and related accessories contain lead and lead compounds, chemicals known to the State of California to cause cancer and reproductive harm. Wash hands after handling.

Use of this product may cause exposure to chemicals known to the State of California to cause cancer, birth defects, or other reproductive harm.

Introduction

This vehicle is intended to be primarily used off-highway to transport people. Using this product for purposes other than its intended use could prove dangerous to you, your passengers, and bystanders.

Read this information carefully to learn how to operate and maintain your product properly and to avoid injury and product damage. You are responsible for operating the product properly and safely.

Visit www.Toro.com for product safety and operation training materials, accessory information, help finding a dealer, or to register your product.

Whenever you need service, genuine Toro parts, or additional information, contact an Authorized Service Distributor or Toro Customer Service and have the model and serial numbers of your product ready. Figure 1 identifies the location of the model and serial numbers on the product. Write the numbers in the space provided.

Important: **With your mobile device, you can scan the QR code on the serial number decal (if equipped) to access warranty, parts, and other product information.**

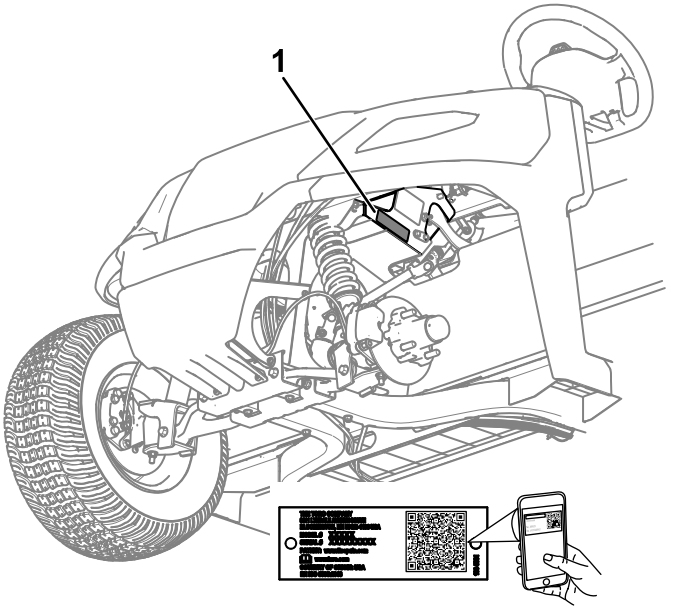

g405906

Figure 1

1. Model and serial number location

Model No. _____

Serial No. _____

This manual uses 2 words to highlight information. **Important** calls attention to special mechanical information and **Note** emphasizes general information worthy of special attention.

The safety-alert symbol (Figure 2) appears both in this manual and on the machine to identify important safety messages that you must follow to avoid accidents. This symbol will appear with the word **Danger**, **Warning**, or **Caution**.

- **Danger** indicates an imminently hazardous situation which, if not avoided, **will** result in death or serious injury.
- **Warning** indicates a potentially hazardous situation which, if not avoided, **could** result in death or serious injury.
- **Caution** indicates a potentially hazardous situation which, if not avoided, **may** result in minor or moderate injury.



g000502

Figure 2
Safety-alert symbol

© 2025—The Toro® Company
8111 Lyndale Avenue South
Bloomington, MN 55420

Contact us at www.Toro.com.
Printed in the USA
All Rights Reserved

Contents

Safety 4
General Safety 4
Safety and Instructional Decals 5
Setup 8
1 Installing the Steering Wheel 8
2 Charging the Machine 9
3 Checking the Fluid Levels and Tire Pressure 9
4 Burnishing the Brakes 9
Product Overview 10
Controls 10
Display 12
Specifications 16
Attachments/Accessories 16
Before Operation 17
Before Operation Safety 17
Checking the Tire Pressure 17
Breaking in a New Machine 18
During Operation 18
During Operation Safety 18
Driving the Machine 20
Monitoring the Battery-System Charge Level 20
Stopping the Machine 20
After Operation 21
After Operation Safety 21
Moving an Inoperable Machine 22
Transporting the Lithium-Ion Batteries 23
Understanding the Lithium-Ion Battery Charger 23
Maintenance 25
Maintenance Safety 25
Recommended Maintenance Schedule(s) 26
Daily Maintenance Checklist 27
Pre-Maintenance Procedures 28
Preparing the Machine for Maintenance 28
Removing the Seat Assembly 28
Installing the Seat Assembly 28
Removing the Hood 28
Installing the Hood 29
Lifting the Machine 30
Lubrication 31
Greasing the Front Wheel Bearings 31
Electrical System Maintenance 34
Using the Battery-Disconnect Switch 34
Servicing the Batteries 34
Maintaining the Lithium-Ion Batteries 34
Maintaining the Battery Charger 34
Locating the Fuses 35
Replacing the Headlight 35
Drive System Maintenance 36
Maintaining the Tires 36
Inspecting the Steering and Suspension Components 36
Adjusting the Wheel Alignment 36
Checking the Transaxle-Fluid Level 37
Changing the Transaxle Fluid 38
Brake Maintenance 38
Checking the Brakes 38
Checking the Brake-Fluid Level 38
Replacing the Service and Parking-Brake Pads 39
Changing the Brake Fluid 39
Cleaning 39
Washing the Machine 39
Storage 40
Storage Safety 40
Storing the Machine 40
Battery Storage Requirements 40

Safety

General Safety

- This product is capable of causing personal injury or death. Always follow all safety instructions to avoid serious personal injury.
- Improper operation, maintenance, or poor housekeeping of the machine may cause it to become unstable; other factors include terrain conditions, slope, speed, and poor operator judgment.
- Read and understand the contents of this *Operator's Manual* before you start the machine. Ensure that everyone using this product knows how to use it and understands the warnings.
- Use your full attention while operating the machine. Do not engage in any activity that causes distractions; otherwise, injury or property damage may occur.
- Do not put your hands or feet near moving components of the machine.
- Do not operate the machine without all guards and other safety protective devices in place and in good working order.
- Keep bystanders and children out of the operating area. Never allow children to operate the machine.
- Stop and shut off the machine and remove the key before servicing.

Safety and Instructional Decals

Safety decals and instructions are easily visible to the operator and are located near any area of potential danger. Replace any decal that is damaged or missing.



decal120-9570

120-9570

1. Warning—stay away from moving parts, keep all guards and shields in place.

For Model 08926 and 08928 only:



decal140-0920

140-0920

1. Warning—do not operate the machine while under the influence of alcohol or drugs.
2. Falling hazard; dismemberment hazard—passengers should sit in the designated seating positions only; keep all limbs inside the vehicle.

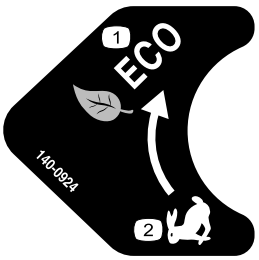

decal140-0924

140-0924

1. Eco mode
2. Performance mode

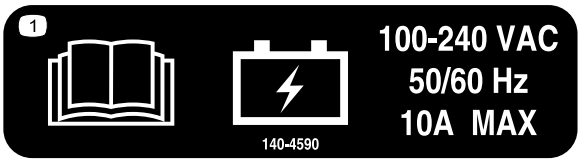

decal140-4590

140-4590

1. Read the *Operator's Manual* for battery information.



decal144-0275

144-0275

1. Batteries are flammable.

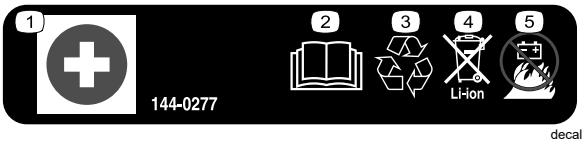

decal144-0277

144-0277

1. Positive terminal
2. Read the *Operator's Manual*.
3. Recycle the battery.
4. Do not dispose improperly.
5. Do not expose to fire.

For Model 08924 and 08924TC only:



decal144-5574

144-5574

1. Warning—do not operate the machine while under the influence of alcohol or drugs.
2. Falling hazard; dismemberment hazard—do not carry more than 4 occupants; occupants should sit in the designated seating positions only; keep all limbs inside the vehicle.

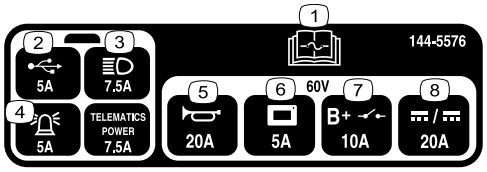

decal144-5576

144-5576

1. Read the *Operator's Manual* for fuse information.
2. USB (5 A)
3. Headlights (10 A)
4. Alarm (5 A)
5. Horn (20 A)
6. Display (10 A)
7. Main system B+ (10 A)
8. DC to DC (20 A)

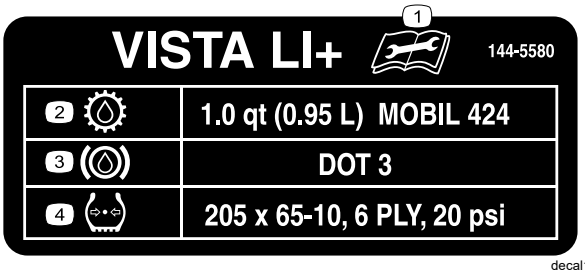

decal144-5580

144-5580

1. Read the *Operator's Manual* before performing maintenance.
2. Transmission fluid
3. Brake fluid
4. Tire pressure

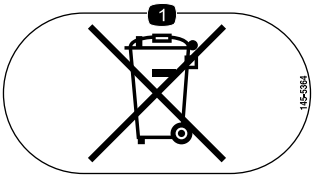

decal145-5364

145-5364

1. Do not dispose improperly.

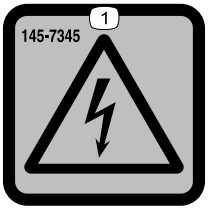

decal145-7345

145-7345

1. Electrical shock hazard



decal144-5571

144-5571

1. Warning—read the *Operator's Manual*.
2. Warning—receive proper training before operating the machine.
3. Warning—never allow children to operate the machine; only operate the machine while sitting in the operator's position.
4. Collision hazard—do not operate the machine on public roads.
5. Tipping hazard—drive slowly across or up slopes; take turns slowly; do not exceed speeds of 25 kph (16 mph); drive slowly when carrying passengers; drive slowly on uneven terrain
6. Warning—Engage the parking brake, turn the key to the OFF position, and remove the key before leaving the operator's position.



decal144-5573

144-5573

1. Off
2. On
3. Parking brake—Disengage (hold for 5 seconds)
4. To start the machine—1) Sit in the operator's position and have all passengers sit in the designated seating positions; 2) Turn the key to the ON position; 3) Press the direction selector button to the desired direction of travel; 4) Press down on the pedal.
5. To shut off the machine—1) Release the pedal; 2) Engage the parking brake; Turn the key to the OFF position; 4) Remove the key.

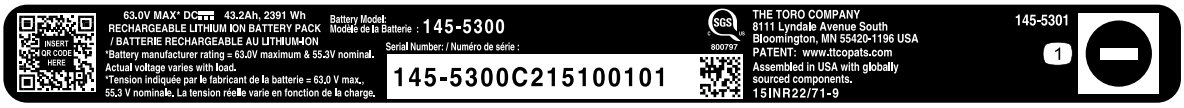

decal145-5301

145-5301

1. Negative battery terminal



decal145-5338

145-5338

1. Warning—read the *Operator's Manual*.
2. Warning—do not open the battery; do not use a damaged battery.
3. Explosion hazard—do not expose to sparks or open flame.
4. Electric shock hazard—do not perform maintenance on the battery.
5. Electric shock hazard

Setup

Loose Parts

Use the chart below to verify that all parts have been shipped.

Procedure	Description	Qty.	Use
1	Steering wheel Screw Spring Wheel cover Wheel clip	1 5 2 1 1	Install the steering wheel (4-passenger crated model only).
2	No parts required	–	Charge the machine.
3	No parts required	–	Check the fluid levels and tire pressure.
4	No parts required	–	Burnish (break-in) the brakes.

1

Installing the Steering Wheel

4-Passenger Crated Model Only

Parts needed for this procedure:

1	Steering wheel
5	Screw
2	Spring
1	Wheel cover
1	Wheel clip

Procedure

Refer to Figure 3 for this procedure.

1. Place the steering wheel on the steering shaft.

   Ensure that the steering wheel is centered (i.e., the flat bottom should be parallel with the ground).
2. Use the locknut to secure the steering wheel to the steering shaft.
3. Torque the locknut to 27 N·m (20 ft-lb).
4. Use 2 screws and 2 springs to secure the wheel clip to the wheel cover.
5. Use 3 screws to secure the wheel cover to the steering wheel.
6. Torque the 5 screws to 0.6 N·m (5 in-lb).

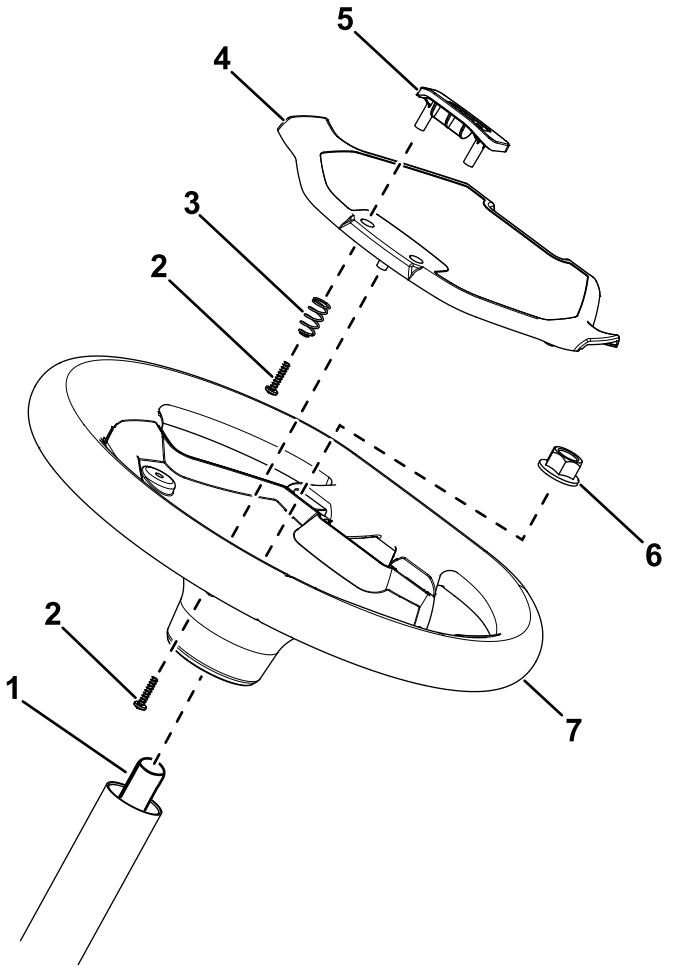

g410793

Figure 3

1. Steering shaft
2. Screw
3. Spring
4. Wheel cover
5. Wheel clip
6. Locknut
7. Steering wheel

2

Charging the Machine

No Parts Required

Procedure

Charge the machine; refer to Understanding the Lithium-Ion Battery Charger (page 23).

3

Checking the Fluid Levels and Tire Pressure

No Parts Required

Procedure

1. Check the brake-fluid level before you first start the machine; refer to Checking the Brake-Fluid Level (page 38).
2. Check the transaxle-fluid level before you first start the machine; refer to Checking the Transaxle-Fluid Level (page 37).
3. Check the air pressure in the tires; refer to Checking the Tire Pressure (page 17).

4

Burnishing the Brakes

No Parts Required

Procedure

To ensure optimum performance of the brake system, burnish (break-in) the brakes before use.

1. Bring the machine up to full speed, apply the brakes to rapidly stop the machine without locking up the tires.
2. Repeat this procedure 10 times, waiting 1 minute between stops, to avoid overheating the brakes.

Product Overview

Controls

Control Panel

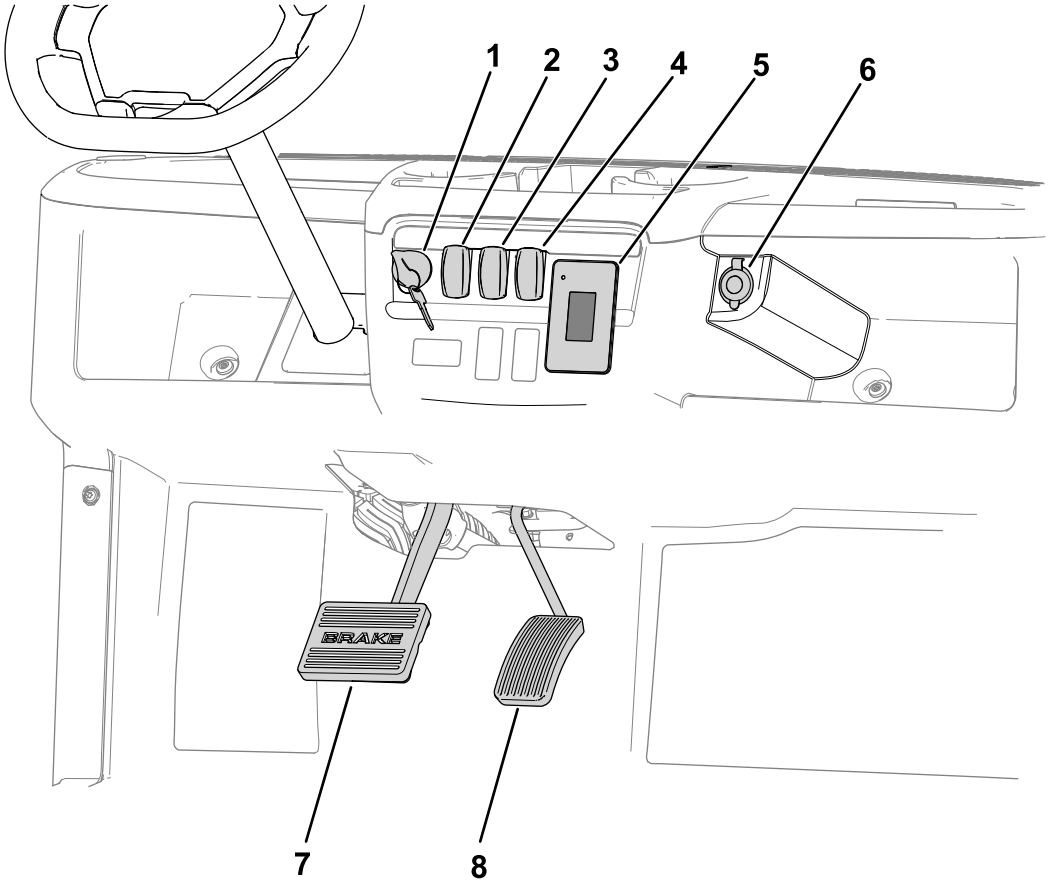

g406290

Figure 4

1. Key switch
2. Direction selector
3. Light switch
4. Horn switch
5. Display
6. USB port
7. Brake pedal
8. Accelerator pedal

Accelerator Pedal

Use the accelerator pedal to vary ground speed of the machine. Pressing down the accelerator pedal starts the machine. Pressing the pedal farther increases ground speed. Releasing the pedal slows the machine, and the machine shuts off.

The forward speed in performance mode is 26 km/h (16 mph).

The forward speed in economy mode is 18 km/h (11 mph).

Brake Pedal

Use the brake pedal to stop or slow the machine.

⚠ WARNING

Operating a machine with worn or incorrectly adjusted brakes can result in personal injury.

If the brake pedal travels within 25 mm (1 inch) of the machine floor board, adjust or repair the brakes.

Direction Selector

The direction selector (Figure 4) has 2 positions: FORWARD and REVERSE.

Note: The machine can be on in any of the 2 positions, but only moves in the FORWARD and REVERSE positions.

Horn Switch

Press the horn switch (Figure 4) to sound the horn.

Light Switch

Use the light switch (Figure 4) to illuminate the headlights. Push the light switch up to turn on the headlights. Push the light switch down to turn off the lights.

USB Port

Use the USB port (Figure 4) to power mobile devices.

Important: **When you are not using the USB port, insert the rubber plug to prevent damage to the port.**

Key Switch

Use the key switch (Figure 4) to run and shut off the machine or put the machine into TRANSPORT mode.

The key switch has 3 positions: ON, OFF, and TRANSPORT.

Rotate the key clockwise to the ON position to operate the machine.

When you stop the machine, rotate the key counterclockwise to the OFF position to shut off the machine. Remove the key whenever you leave the machine.

To disengage the parking brake, rotate and hold the key switch in place for 5 seconds to enter the TRANSPORT position.

Display

The display shows information about your machine, such as the operating status, various diagnostics, and other information about the machine (Figure 5).

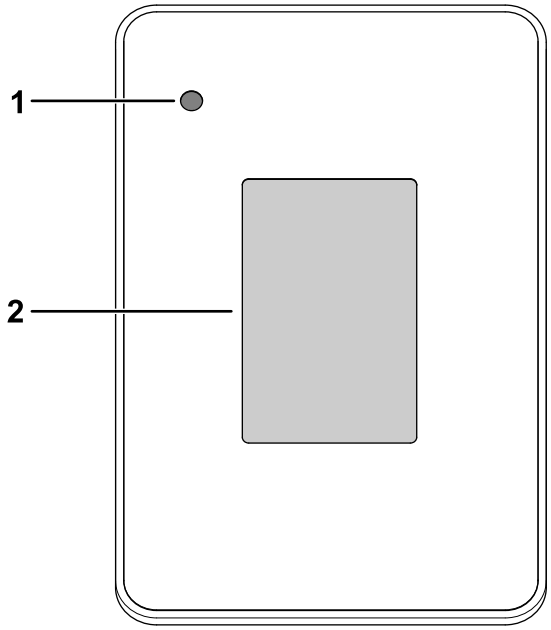

g320256

Figure 5

1. Indicator light
2. Display

There is a startup screen, run screen, and charging screen on the display (Figure 6, Figure 7, and Figure 8).

Figure 7 shows what you may see on the display when you run the machine. The startup screen displays for a few seconds after you turn the key to the ON position, then the run screen displays.

The LED indicator light is lit solid green when there are no faults active. If there are faults active on the machine, the LED flashes red. If there is an advisory present, the LED is lit solid red (no blinking).

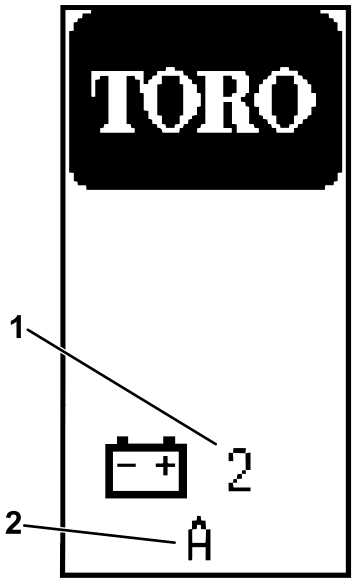

g439782

Figure 6

Startup screen

1. Software revision
2. Number of equipped batteries on the machine

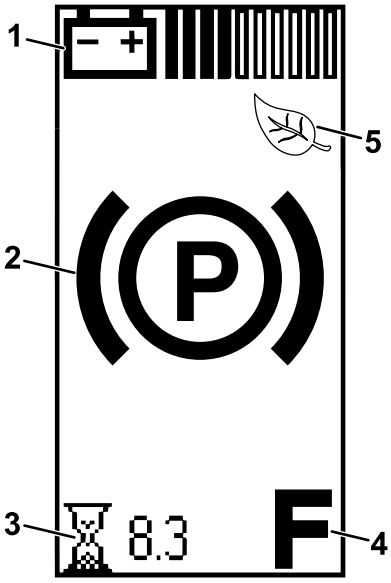

g439795

Figure 7

Run screen

1. Battery charge
2. Parking brake is engaged.
3. Hours operated
4. Direction
5. Eco mode

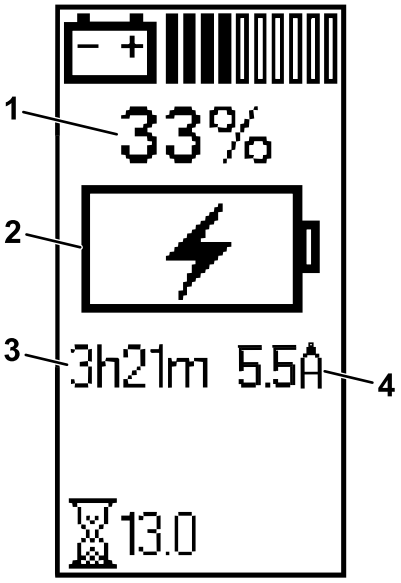

g413589

Figure 8

Charging screen

1. Battery life
2. Battery currently charging indicator
3. Estimated time to fully charge the machine
4. Charging current (Amps)

The run screen with the direction position (Figure 9) appears when you change directions.

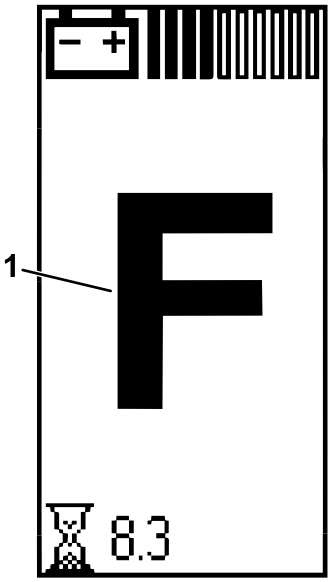

g415318

Figure 9

1. FORWARD position

The run screen with the current machine speed (Figure 10) appears when you are driving the machine.

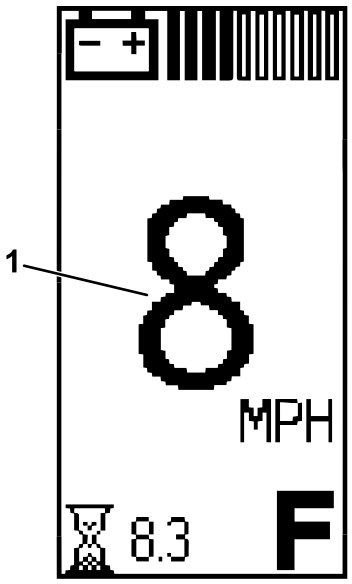

g415320

Figure 10

1. Current machine speed

An active fault code (Figure 11) appears on the display if there is an issue with the machine.

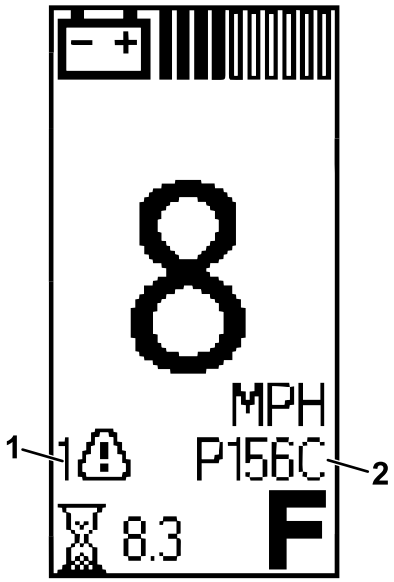

g415319

Figure 11

1. Active fault indicator
2. Fault code

When the cold battery indicator (Figure 12) flashes on the run screen during operation, the machine performance changes until the battery temperature is above 0°C (32°F).

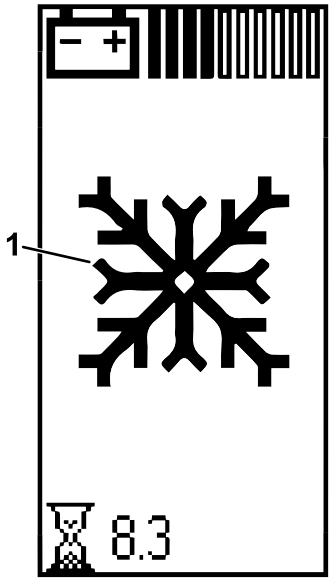

Figure 12

1. Cold battery indicator

The cold battery indicator also appears in the charging screen (Figure 13) when the batteries are too cold to be charged.

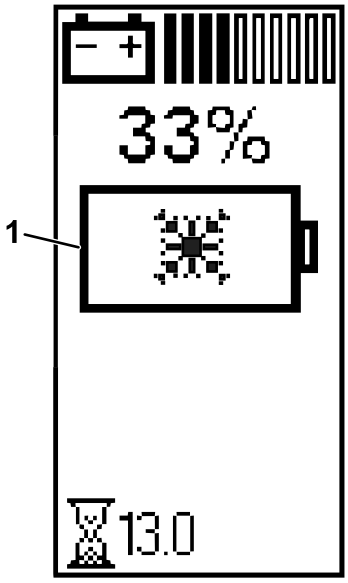

Figure 13

1. Cold battery indicator

Icon Descriptions

F	Direction—FORWARD position
N	Transport—NEUTRAL position
R	Direction—REVERSE position
(P)	Parking brake is engaged.
	Hour meter
	Battery voltage
	Battery charge level
	Battery currently charging
	Low-battery advisory
	Eco Mode is on.
	Active fault
	Hot battery indicator—battery temperature is greater than 67°C (152°F)
	Cold battery indicator—battery temperature is less than 0°C (32°F)
	Batteries are too cold to be charged.

Supervisor Speed-Limit Switch

The supervisor speed-limit switch, located under the seat assembly (Figure 14), has 2 positions: PERFORMANCE and ECONOMY. Rotate the switch clockwise to the ECONOMY position to limit the machine speed to 18 km/h (11 mph). Rotate the switch counterclockwise to the PERFORMANCE position to restore the speed of the machine to 26 km/h (16 mph).

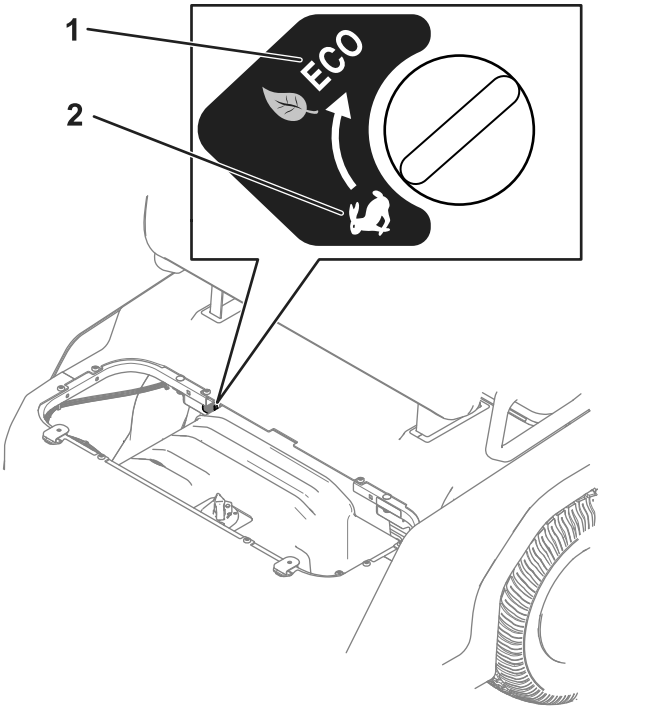

g411846

Figure 14

1. PERFORMANCE position
2. ECONOMY position

Passenger Handholds

The passenger handholds are located on the outside of each seat and at the rear of the machine (Figure 15).

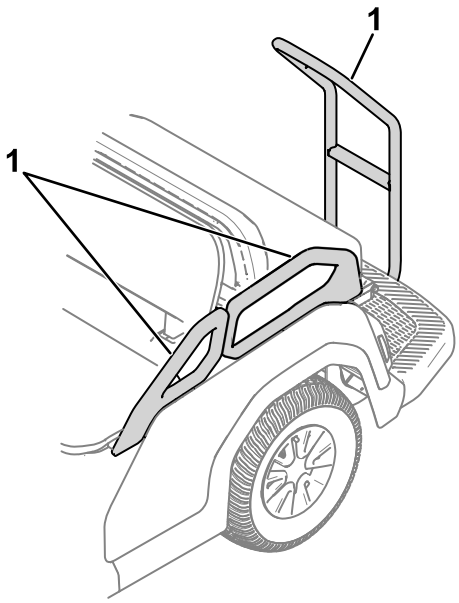

g408491

Figure 15

1. Passenger handhold

Specifications

Note: Specifications and design are subject to change without notice.

Base weight	4-passenger model: 403 kg (890 lb), including the Canopy Kit
	6-passenger model: 422 kg (930 lb)
	8-passenger model: 487 kg (1,075 lb)
Rated capacity (on level ground)	4-passenger model: 458 kg (1,010 lb) total, including 90.7 kg (200 lb) operator and 91 kg (200 lb) for each passenger, load, accessories, and attachments
	6-passenger model: 689 kg (1,520 lb) total, including 90.7 kg (200 lb) operator and 91 kg (200 lb) for each passenger, load, accessories, and attachments
	8-passenger model: 873 kg (1,925 lb) total, including 90.7 kg (200 lb) operator and 91 kg (200 lb) for each passenger, load, accessories, and attachments
Gross vehicle weight (GVW)—on level ground	861 kg (1,900 lb)
	1,111 kg (2,450 lb)
	1,360 kg (3,000 lb)
Overall width	112 cm (44 inches)
Overall length	4-passenger model: 277 cm (109 inches)
	6-passenger model: 357 cm (140.5 inches)
	8-passenger model: 437 cm (172 inches)
Overall height	Top of steering wheel: 121 cm (47.5 inches)
	Top of canopy: 188 cm (73.9 inches)
Ground clearance	21.6 cm (8.5 inches) at the front with no operator 15.7 cm (6.2 inches) at the rear with no operator
Wheel base	4-passenger model: 166 cm (65.5 inches)
	6-passenger model: 246 cm (97 inches)
	8-passenger model: 326 cm (128.5 inches)
Wheel tread (center line to center line)	Front: 90 cm (35.4 inches) Rear: 90 cm (35.4 inches)

Attachments/Accessories

A selection of Toro approved attachments and accessories is available for use with the machine to enhance and expand its capabilities. Contact your Authorized Service Dealer or authorized Toro distributor or go to www.Toro.com for a list of all approved attachments and accessories.

To ensure optimum performance and continued safety certification of the machine, use only genuine Toro replacement parts and accessories. Replacement parts and accessories made by other manufacturers could be dangerous, and such use could void the product warranty.

Operation

Before Operation

Before Operation Safety

General Safety

- Never allow children or untrained people to operate or service the charger. Local regulations may restrict the age of the operator. The owner is responsible for training all operators and mechanics.
- The owner is responsible for training all operators and mechanics. Operators of the machine should complete an operator's training program regardless of previous experience operating vehicles.
- The operator's training program should include the *Operator's Manual* and emphasize the safety of the operator, passengers, and bystanders; general safety rules; an overview of the equipment, controls, and functions, and how they work when used properly and improperly; surface conditions, slope, and other conditions that could affect the operation of the machine; and an evaluation of operator competency.
- Become familiar with the safe operation of the equipment, operator controls, and safety signs.
- Shut off the machine, wait for the parking brake to engage, remove the key, and wait for all movement to stop before you leave the operator's position.
- Allow the machine to cool before adjusting, servicing, cleaning, or storing it.
- Know how to stop and shut off the machine quickly.
- Check that all safety devices and decals are in place. Repair or replace all safety devices and replace all illegible or missing decals. Do not operate the machine unless they are present and functioning properly.
- Inspect the machine periodically to ensure that the safety-interlock system (if equipped) is operating properly.
- Assess the area where you will use the machine and identify areas where you should not operate it and any hazards to avoid. Train operators to comply with any additional safety practices.
- Use care when operating the machine where there are pedestrians, bicycles, or motor vehicles, whenever possible. When operating the machine with other vehicles or pedestrians around, you may use mirrors, barriers, lighting, or other measures in these areas.
- It is the owner's responsibility to survey the environment and operating conditions to determine whether the machine requires lights, and if so, to equip the machine with appropriate lights.
- The owner is responsible for determining if the operating conditions require the machine to have additional sound-producing and/or visual devices and for providing and maintaining such devices according to the manufacturer's recommendations.
- At the beginning of each shift using the machine, check the condition of the machine, inspecting the tires, warning devices, lights, battery, speed and directional controllers, brakes, safety interlocks, and steering mechanism. If the machine needs repair or is unsafe in any way, report it immediately to the owner and do not operate the machine until it is in a safe operating condition.

Checking the Tire Pressure

Service Interval: Before each use or daily

Front and rear tires air pressure specification: 138 to 165 kPa (20 to 24 psi)

Important: **Do not exceed the maximum air pressure indicated on the sidewall of the tire.**

Note: The air pressure needed in the tires is determined by the payload that you intend to carry.

1. Check the air pressure in the tires.
   - Use lower air pressure in the tires for lighter payloads, for less soil compaction, for a smoother ride, and to minimize tire marks on the ground.
   - Use higher air pressure in the tires for carrying heavier payloads at higher speeds.
2. If necessary, adjust the air pressure in the tires by adding or removing air in the tires.

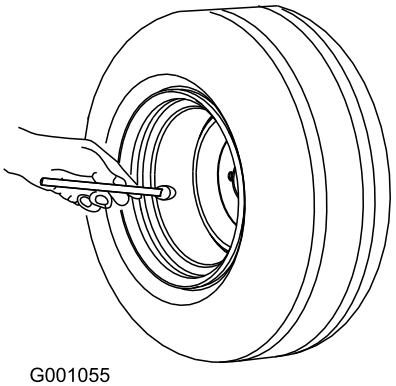

G001055

g001055

Figure 16

Breaking in a New Machine

Service Interval: After the first 100 hours—Perform the breaking in a new machine guidelines.

Perform the breaking in a new machine guidelines to provide proper performance and long life for the machine.

- Ensure that the brakes are burnished; refer to the burnishing section in Setup.
- Check the brake fluid; refer to Checking the Brake-Fluid Level (page 38).
- Refer to Maintenance (page 25) for any special low hour checks.
- Check the front and rear suspension positioning and adjust it, if necessary; refer to Adjusting the Wheel Alignment (page 36).
- For optimal battery performance and battery life, charge the batteries to 100% when you receive your machine.

During Operation

During Operation Safety

General Safety

- The owner/operator can prevent and is responsible for accidents that may cause personal injury or property damage.
- Report all accidents with the machine to the owner.
- Keep bystanders and children out of the operating area.
- Passengers should sit in the designated seating positions only. Keep arms and legs within the machine body at all times. Do not carry passengers in the cargo bed.
- The operator should wear substantial, slip-resistant footwear.
- Use your full attention while operating the machine. Do not engage in any activity that causes distractions; otherwise, injury or property damage may occur.
- Do not operate the machine while ill, tired, or under the influence of alcohol or drugs.
- You and your passengers should remain seated whenever the machine is moving. Keep your hands on the steering wheel; your passengers should use the handholds provided.
- Do not exceed the maximum gross vehicle weight (GVW) of the machine.
- Use extra caution when operating, braking, or turning the machine with a heavy load in the cargo bed.
- Carrying oversized loads in the cargo bed reduces the stability of the machine. Do not exceed the carrying capacity of the bed.
- Operate the machine only in good visibility. Watch for holes, ruts, bumps, rocks, and loose or hidden objects. Reduce the ground speed of the machine when operating on rough, uneven terrain, and near curbs, holes, and other sudden changes in terrain that could overturn the machine. Tall grass can hide obstacles. Use care when approaching blind corners, shrubs, trees, or other objects that may obscure your vision.
- Identify sharp turns, blind spots, bridge approaches, and other potentially hazardous areas, and post a warning to the operator of the nature of the hazard(s) and the proper precautions to take to avoid the hazard(s).
- Do not drive the machine near drop-offs, ditches, or embankments. The machine could suddenly roll over if a wheel goes over the edge or if the edge gives way.

- Keep away from potential hazards, such as edges of ramps and platforms.
- Always watch out for and avoid low overhangs such as tree limbs, door jambs, overhead walkways, etc.
- Look behind you before reversing the machine to be sure of a clear path.
- When using the machine on public roads, follow all traffic regulations and use any additional accessories that may be required by law, such as lights, turn signals, slow-moving vehicle (SMV) signs, and others as required.
- It can take longer to stop the machine on wet surfaces than on dry surfaces. To dry out wet brakes, drive slowly on a level surface while putting light pressure on the brake pedal.
- Use extreme caution and slow down when driving the machine in wet or icy areas or on loose terrain could result in reduced traction, steering, stability, and braking. Repair areas of loose terrain, if possible, or close off the area and post a warning to prevent others from operating the machine on those areas.
- Operating the machine at high speed and then quickly stopping may cause the rear wheels to lock up, which impairs your control of the machine.
- Do not leave a running machine unattended. The machine is considered unattended when you are 7.6 m (25 ft) or more from it, which remains in view, or whenever you leave the machine and it is not within view. Whenever you leave the machine and are within 7.6 m (25 ft) of the machine and it is still in view, ensure that the parking brake is engaged to prevent the machine from moving.
- Before you leave the operating position, do the following:
  - Park the machine on a level surface.
  - Ensure that the parking brake is engaged.
  - Shut off the machine and remove the key.
  - Wait for all movement to stop.
- If the machine ever vibrates abnormally, stop and shut off the machine immediately, wait for all movement to stop, and inspect for damage. Repair all damage to the machine before resuming operation.
- Do not park the machine or leave it unattended where it obstructs fire aisles, access to stairways, or fire equipment.
- Operate the machine only while in the operating position. You and your passengers should remain seated whenever the machine is in motion.
- Do not allow passengers to distract you either physically or verbally while you are driving the machine.
- Make starts, stops, turns, or direction reversals smoothly so as not to endanger passengers or lose control of the machine.
- Always be aware of and watch out for pedestrians. Do not drive the machine in a manner that endangers others.
- Under all travel conditions, operate the machine at a speed that allows you stop it safely.
- Yield the right of way to pedestrians, ambulances, fire trucks, vehicles, or other machines in emergency situations.
- Do not pass another machine traveling in the same direction at intersections, blind spots, or at other dangerous locations.
- Keep a clear view of the path of travel, observe other traffic and personnel, and maintain a safe clearance.
- Slow down or stop, as conditions dictate, and activate the sound-producing warning device at cross aisles and when visibility is obstructed at other locations.
- Do not drive the machine onto any elevator unless specifically authorized to do so. Approach elevators slowly, and then enter squarely after the elevator car is properly leveled. Once on the elevator, ensure that the parking brake is engaged and shut off the machine. Have all others leave the elevator before you enter or exit in the machine.
- Do not operate the machine when there is the risk of lightning.
- Do not add to or modify the machine.
- Use accessories and attachments approved by The Toro® Company only.

Slope Safety

- Slopes are a major factor related to loss-of-control and tip-over accidents, which can result in severe injury or death.
- Survey the site to determine which slopes are safe for operating the machine and establish your own procedures and rules for operating on those slopes. Always use common sense and good judgment when performing this survey.
- If you feel uneasy operating the machine on a slope, do not do it.
- Keep all movement on slopes slow and gradual. Do not suddenly change the speed or direction of the machine.
- Avoid operating the machine on wet terrain. Tires may lose traction. A rollover can occur before the tires lose traction.

- If possible, avoid turning the machine and use extreme caution on slopes, ramps, or inclines. Travel straight up and down a slope.
- If you begin to lose momentum while climbing a slope, gradually engage the brakes and slowly reverse the machine straight down the slope.
- Turning while going up or down a slope can be dangerous. If you must turn on a slope, do it slowly and cautiously. Avoid driving/turning on improperly banked curves.
- Heavy loads affect stability on a slope. Carry a reduced load and reduce your ground speed when operating on a slope or if the load has a high center of gravity. Secure the load to the cargo bed of the machine to prevent the load from shifting. Take extra care when hauling loads that shift easily (e.g., liquids, rock, sand, etc.).
- Avoid starting and stopping the machine on a slope. Stopping while going down a slope takes longer than stopping on a level surface. If you must stop the machine, avoid sudden speed changes, which can cause the machine to tip or roll over. Do not engage the brakes suddenly when rolling rearward, as this may cause the machine to overturn.
- Whenever you operate the machine on steep grades, stay on the designated vehicle paths, which should be marked with a warning of a steep grade.
- Operating the machine at an excessive speed down a slope will adversely affect its stability. Identify hazardous slopes with a warning in places preceding the beginning of the slope. Use care when approaching a slope, especially when you turn the machine downhill or the downhill slope exceeds 10% (6 degrees) on an unpaved surface or 20% (11 degrees) on a a paved surface. Avoid parking on steep hills.

Loading Safety

- Do not exceed the gross vehicle weight (GVW) of the machine when operating it with a load in the cargo bed; refer to Specifications (page 16).
- Distribute the load in the cargo bed evenly to improve the stability and control of the machine.

Driving the Machine

1. Ensure that the key switch is in the OFF position.
2. Shut off the following 12V electrical devices:
   - Headlights
   - Turn signals
   - Hazard flashers
   - Optional beacon light
   - Shut off or unplug all devices connected to the USB charge port
3. Sit in the operator's position and have all passengers sit in the designated seating positions.
4. Turn the key to the ON position.
5. Press the direction selector button to the desired direction of travel.
6. Press down on the accelerator pedal.

Monitoring the Battery-System Charge Level

Refer to the display to determine the battery-system charge level; refer to Display (page 12).

Understanding the Low Battery-Level Advisories

If the battery level becomes too low (i.e., below 10%), a low-battery icon appears on the display. When you are operating at this battery percentage, drive the machine to a designated battery-charging area and charge the batteries; refer to Understanding the Lithium-Ion Battery Charger (page 23).

If you operate the machine while the battery charge level is blank, the machines operates at a reduced speed (i.e., 5 km/h or 3 mph).

Stopping the Machine

Important: **When stopping the machine on an incline, use the service brakes to stop the machine to hold the machine in place. Using the accelerator to stall the machine on the hill can overheat the motor or drain the batteries.**

1. Remove your foot from the accelerator pedal.
2. Slowly press the brake pedal to apply the service brakes until the machine comes to a complete stop. The parking brake engages when the machine comes to a complete stop.

Note: The stopping distance may vary depending on the machine load and speed.

After Operation

After Operation Safety

General Safety

- Before you leave the operating position, do the following:
  - Park the machine on a level surface.
  - Ensure that the parking brake is engaged.
  - Shut off the machine and remove the key.
  - Wait for all movement to stop.
- If, during operation, you find that the machine is unsafe in any way, report it immediately to the owner and do not operate the machine until it is in safe operating condition.
- Allow the machine to cool before adjusting, servicing, cleaning, or storing it.

Battery and Charger Safety

General

- **WARNING:** Risk of fire and electric shock—The batteries have no user-serviceable parts.
- Confirm the voltage that is available in your country before using the charger.
- Do not get the charger wet; keep it protected from rain and snow.
- A risk of fire, electric shock, or injury may result from using an accessory not recommended or sold by Toro.
- To reduce risk of a battery explosion, follow these instructions and the instructions for any equipment that you intend to use near the charger.
- Batteries could emit explosive gasses if they are significantly overcharged.
- Refer to an authorized Toro distributor to service or replace a battery.

Training

- Never allow children or untrained people to operate or service the charger. Local regulations may restrict the age of the operator. The owner is responsible for training all operators and mechanics.
- Read, understand, and follow all instructions on the charger and in the manual before operating the charger. Be familiar with the proper use of the charger.

Preparation

- Keep bystanders and children away while charging.
- Wear appropriate clothing while charging, including eye protection; long pants; and substantial, slip-resistant footwear.
- Shut off the machine and wait until the machine has completely powered down before charging. Failure to do this may cause arcing.
- Ensure that the area is well ventilated while charging.
- The charger is for use on only nominal 120 to 240 VAC operation. For use with 240 V circuits, contact your authorized Toro distributor for the correct power cord.
- Use only a power cord approved by Toro.

Operation

- Do not charge a frozen battery.
- Do not abuse the cord. Do not carry the charger by the cord or yank on the power supply cord to disconnect the charger from the receptacle. Keep the cord from heat, oil, and sharp edges.
- Connect the charger directly to a grounding receptacle. Do not use the charger on an ungrounded outlet, even with a grounding adapter.
- Do not alter the provided power cord or plug.
- Remove metal items such as rings, bracelets, necklaces, and watches when working with a lithium-ion battery. A lithium-ion battery can produce enough current to cause a severe burn.
- Never operate the charger without good visibility or light.
- Use an extension cord capable of handling 15 A or more. If you are charging outdoors, use an extension cord rated for outdoor use.
- If the power supply cord is damaged while it is plugged in, disconnect the cord from the wall receptacle and contact an authorized Toro distributor for a replacement.
- Unplug the charger from the electrical outlet when not in use, before moving it to another location, or prior to servicing it.

Maintenance and Storage

- Do not disassemble the charger. Take the charger to an authorized Toro distributor when service or repair is required.
- Unplug the power cord from the outlet before starting any maintenance or cleaning to reduce risk of electric shock.
- Maintain or replace safety and instruction labels as needed.

- Do not operate the charger with a damaged cord or plug. Contact an authorized Toro distributor to obtain a replacement cord.
- If the charger has received an impact, been dropped, or otherwise damaged, do not use it; take it to an authorized Toro distributor.

Moving an Inoperable Machine

Towing the Machine

⚠ WARNING

Towing at excessive speeds could cause a loss of steering control, resulting in personal injury.

Never tow the machine at faster than 8 km/h (5 mph).

In case of an emergency, you can tow the machine for a short distance; however, this should not be a standard operating procedure.

Towing the machine is a 2-person job. If you must move the machine a considerable distance, transport it on a truck or trailer.

1. Affix a tow line to the tongue at the front of the machine's frame.
2. To disengage the parking brake, rotate and hold the key switch in place for 5 seconds to enter the TRANSPORT position.

   Note: The "N" symbol (i.e., the NEUTRAL position) should appear on the display.

Disengaging the Brake without Power

⚠ WARNING

While the brake is disengaged, the machine could unintentionally move, and injure you or bystanders.

When you are not pushing or towing the machine, ensure that the parking brake is functional and engaged.

If the battery is fully discharged, or another issue is preventing the brakes from receiving power, the brake can be disengaged with screws.

1. Chock the wheels and ensure that the vehicle cannot roll once the brake is disengaged.
2. Remove the access cover from the rear of the machine (Figure 17).

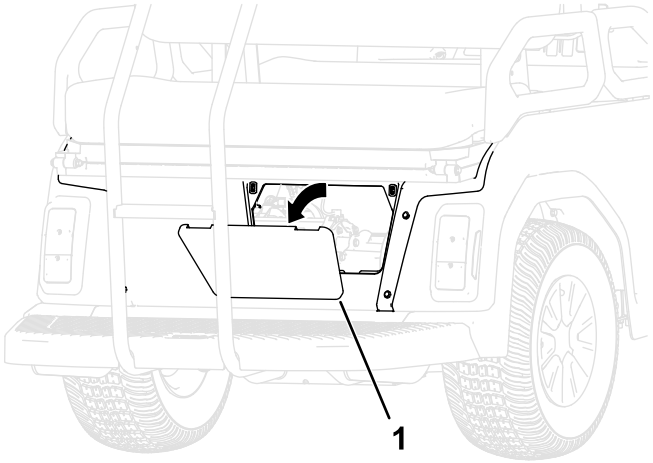

g472909

Figure 17

1. Rear access cover

3. Disconnect the brake connector from the main harness (Figure 18).

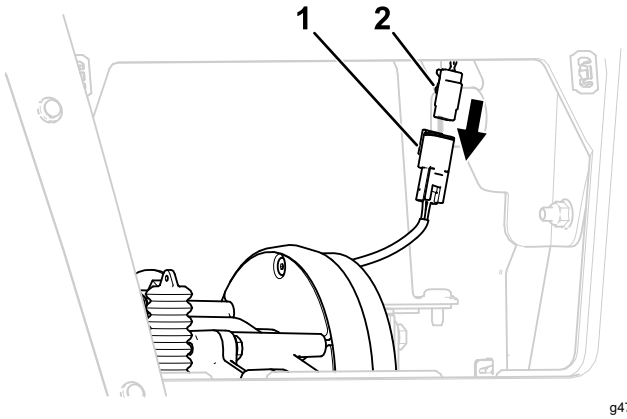

g472910

Figure 18

1. Brake connector
2. Main harness connector

4. To release the parking brake, insert 2 screws (M5-0.8 x 45 mm) in the holes shown in Figure 19 and slowly tighten them.

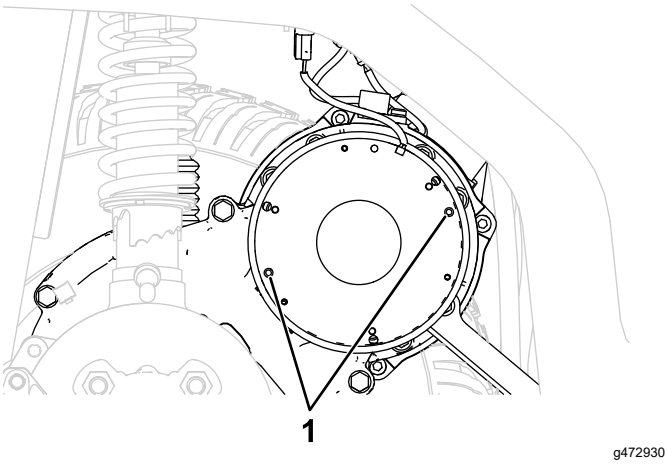

g472930

Figure 19

Some parts not shown for clarity

1. Insert screws here and slowly tighten to release the brake.

5. Move the machine to a service location as needed and chock the wheels.
6. To engage the parking brake, connect the brake harness to the main harness and slowly remove the screws.
7. Install the access cover to the rear of the machine.

Transporting the Lithium-Ion Batteries

The US Department of Transportation and international transportation authorities require that lithium-ion batteries be transported using special packaging and only be transported by carriers certified to haul them. In the US, you are allowed to transport a battery when it is installed on the machine as battery powered equipment, with some regulatory requirements. Contact the US Department of Transportation or the appropriate government body in your country for detailed regulations on transportation of your batteries or the machine with the batteries equipped.

For detailed information on shipping a battery, contact your authorized Toro distributor.

Understanding the Lithium-Ion Battery Charger

Connecting to a Power Source

⚠ DANGER

Contact with water while charging the machine could cause electric shock, causing injury or death.

- **Do not handle the plug or the charger with wet hands or while standing in water.**
- **Do not charge the batteries in the rain or in wet conditions.**

To reduce the risk of electric shock, this charger has a 3-prong grounded plug (type B). If the plug does not fit into the wall receptacle, other grounded plug types are available; contact an authorized Toro distributor.

Do not change the charger or the power-supply-cord plug in any way.

Important: **Check the power supply cord periodically for holes or cracks in the insulation. Do not use a damaged cord. Do not run the cord through standing water or wet grass.**

See Figure 20 for power source requirements.

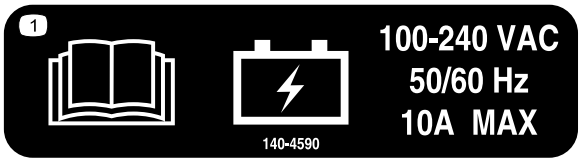

decal140-4590

Figure 20

1. Plug the power-supply cord into the machine charger outlet (Figure 21).

⚠ WARNING

A damaged charger cord can cause an electrical shock or a fire.

Thoroughly inspect the power supply cord before using the charger. If the cord is damaged, do not operate the charger until you obtain a replacement.

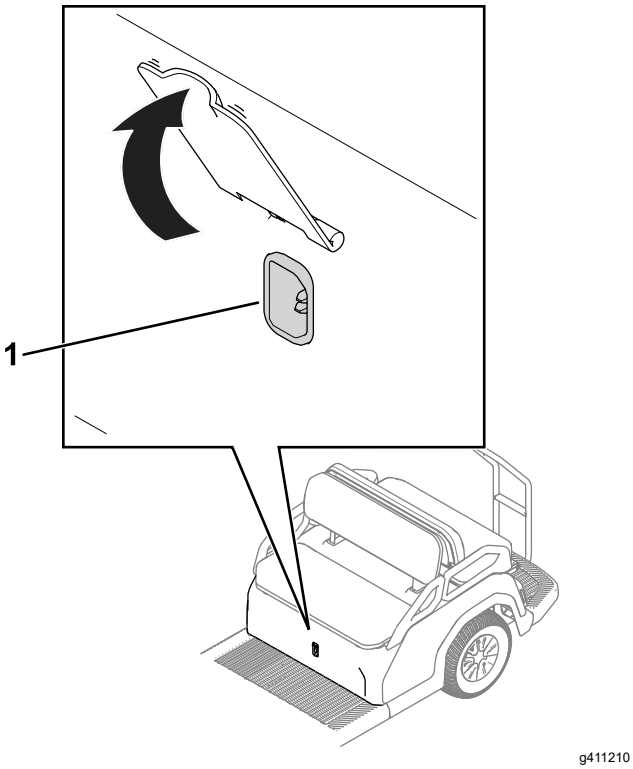

Figure 21

1. Charger outlet

2. Insert the wall plug end of the power-supply cord into a grounded electrical outlet.

Charging the Lithium-Ion Batteries

⚠ CAUTION

Attempting to charge the batteries with a charger not provided by Toro can result in excessive heat and other related product malfunctions, which can lead to property damage and/or injury.

Use the Toro-provided chargers to charge the batteries.

Recommended temperature range for charging: 0° to 45°C (32° to 113°F)

Important: **Charge the batteries only in temperatures that are within the recommended range.**

Note: The charger will not function in temperatures exceeding the minimum or maximum temperatures. The hot or cold battery indicators will appear on the display.

The charging status is shown on the display.

If there is a fault, an error message will appear in the display. To correct an error, refer to the machine *Service Manual*.

Completing the Charging Process

1. Remove the power-supply cord from the machine charger outlet.
2. Place the cord in a storage position that avoids damage.
3. Turn on the machine.
4. Verify the charge level; refer to Display (page 12).

Maintenance

Maintenance Safety

- Failing to perform regularly scheduled maintenance on the machine may cause driving it to become hazardous. Allow only trained and authorized personnel to maintain, repair, adjust, and inspect the machine.
- Before you leave the operating position, do the following:
  - Park the machine on a level surface.
  - Ensure that the parking brake is engaged.
  - Shut off the machine and remove the key.
  - Wait for all movement to stop.
- Allow the machine to cool before adjusting, servicing, cleaning, or storing it.
- If possible, do not perform maintenance while the machine is running. Keep away from moving parts. If you must run the machine to perform a maintenance adjustment, keep your hands, feet, clothing, and any parts of the body away from any moving parts. Keep bystanders away from the machine.
- Support the machine with jack stands whenever you work under the machine.
- Never interfere with the intended function of a safety device or reduce the protection provided by a safety device.
- Inspect the machine periodically to ensure that the sound-producing and/or visual device(s) (if so equipped) are maintained in good operating condition.
- Keep all parts of the machine in good working condition and all the hardware properly tightened. Replace all worn or damaged decals.
- When performing maintenance, use only properly insulated tools.
- Regularly inspect the brakes, steering mechanisms, speed and directional control mechanisms, warning devices, lights, guards, and safety devices according to the manufacturer's recommendations.
- Inspect and maintain the battery, motors, speed and directional controllers, limit switches, protective devices, electrical conductors/insulators, and connections according to the manufacturer's recommendation.
- To ensure optimum performance, use only genuine Toro replacement parts and accessories. Replacement parts and accessories made by other manufacturers could be dangerous, and such use could void the product warranty.
- Modifying and/or adding to the machine without the prior written approval of Toro may adversely affect the safe operation and performance of the machine. If you have modified the machine, you become the original equipment manufacturer of the modified vehicle, and now you have the responsibility to ensure that capacity, operation, warning, maintenance instruction plates, tags, and/or decals are updated accordingly.
- Maintain all safety labels in legible condition, as well as decals, nameplates, serial numbers, and the Operator's Manual. Obtain these items from the manufacturer and affix them in their proper place on the machine.
- After maintaining or repairing the machine, have a qualified and trained mechanic drive it in an authorized area away from other vehicles and pedestrians to ensure that it is adjusted and operates properly.
- Keep the machine clean to minimize hazards and to make detecting components needing service easier.
- Record all work performed in a maintenance record log by date, name of person performing maintenance, and type of maintenance. The owner should periodically inspect the log to ensure that its entries are accurate and complete.
- If major repairs are ever necessary or assistance is required, contact an authorized Toro distributor.

Recommended Maintenance Schedule(s)

Maintenance Service Interval	Maintenance Procedure
After the first 100 hours	• Perform the breaking in a new machine guidelines.
Before each use or daily	• Check the tire pressure. • Check the brake-fluid level. Check the brake-fluid level before you start the machine. • Wash the machine.
Every 100 hours	• Check the condition of the tires and rims. • Torque the wheel-lug nuts. • Inspect the steering and suspension for loose or damaged components. • Check the front wheel camber and toe-in. • Check the brakes.
Every 250 hours	• Check the transaxle-fluid level.
Every 300 hours	• Grease the front wheel bearings.
Every 400 hours	• Replace the service-brake pads.
Every 500 hours	• Change the transaxle fluid.
Every 1,000 hours	• Change the brake fluid.

Note: Download a free copy of the electrical schematic by visiting www.Toro.com and searching for your machine from the Manuals link on the home page.

⚠ WARNING

Failure to properly maintain the machine could result in premature failure of machine systems, causing possible harm to you or bystanders.

Keep the machine well maintained and in good working order as indicated in these instructions.

⚠ CAUTION

Only qualified and authorized personnel should maintain, repair, adjust, or inspect the machine.

- **Avoid fire hazards and have fire-protection equipment present in the work area. Do not use an open flame to check fluid levels.**
- **Do not use open pans of flammable cleaning fluids for cleaning parts.**

⚠ CAUTION

If you leave the key in the switch, someone could accidently start the machine and seriously injure you or other bystanders.

Shut off the machine and remove the key from the switch before you perform any maintenance.

Daily Maintenance Checklist

Duplicate this page for routine use.

Maintenance Check Item	For the week of:						
	Monday	Tuesday	Wednesday	Thursday	Friday	Saturday	Sunday
Check the brake and parking brake operation.							
Check the direction-selector operation.							
Check the brake-fluid level.							
Check for unusual operating noises.							
Check the tire pressure.							
Check for fluid leaks.							
Check the instrument operation.							
Check the accelerator operation.							
Touch up any damaged paint.							
Wash the machine.							
Touch up any damaged paint.							

Pre-Maintenance Procedures

Preparing the Machine for Maintenance

1. Park the machine on a level surface.
2. Ensure that the parking brake is engaged.
3. Shut off the machine and remove the key.

Removing the Seat Assembly

Lift the seat assembly so that the tabs can slide out of the frame brackets (Figure 22).

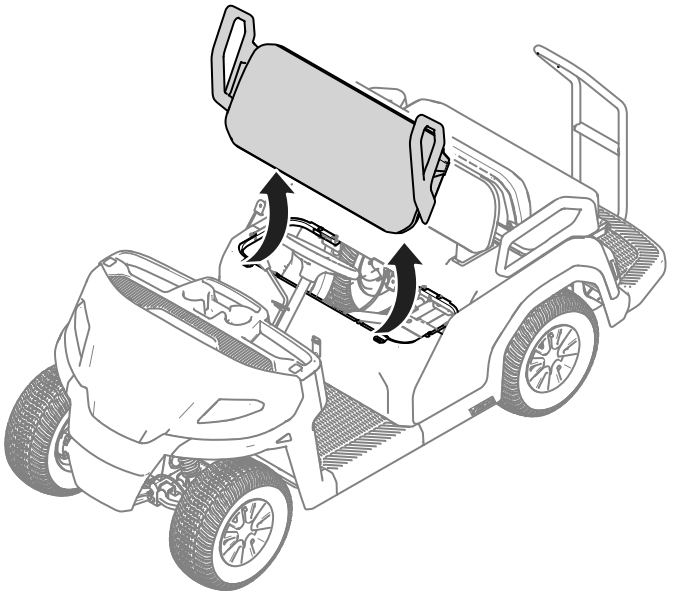

g405486

Figure 22

Installing the Seat Assembly

Slide the seat-assembly tabs into the frame brackets and lower the seat assembly (Figure 23).

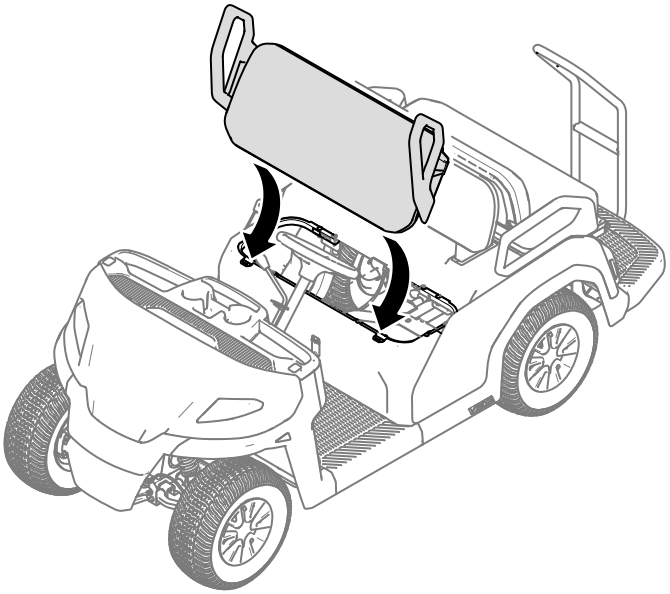

g405485

Figure 23

Removing the Hood

Lift the hood from the machine as shown in Figure 24.

Important: **Be careful to not damage the headlight wire-harness connectors while you remove the hood.**

If you need to completely remove the hood from the machine, disconnect the wire-harness connectors from the headlights.



g411834

Figure 24

Installing the Hood

1. Ensure that the wire-harness connectors are installed to the headlights,
2. Slide the top of the hood under the dash and inside the fenders.
3. Insert the front hood tabs into the front bumper.
4. Insert the hood side tabs into the fenders by pushing on the hood just below the lights.

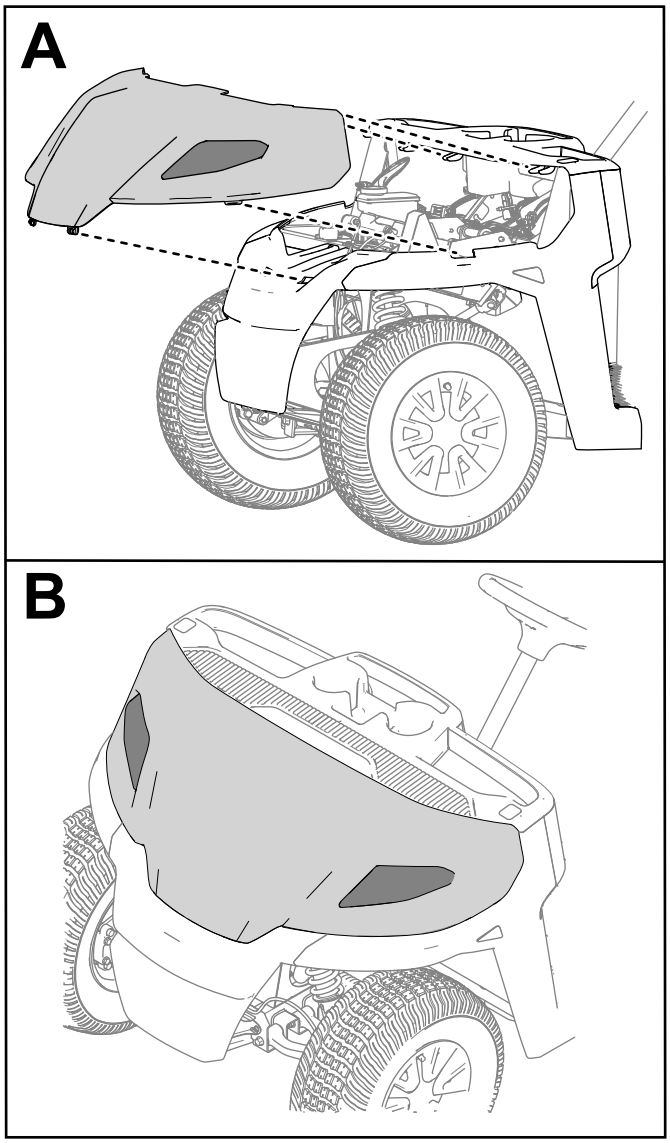

g420146

Figure 25

Lifting the Machine

⚠ DANGER

The machine may be unstable when using a jack. The machine could slip off the jack, injuring anyone beneath it.

- **Do not start the machine while the machine is on a jack.**
- **Always remove the key from the key switch before getting off the machine.**
- **Block the tires when the machine is supported by lifting equipment.**
- **Use jack stands to support the machine once you have lifted it.**

Important: **Whenever you run the machine for routine maintenance and/or diagnostics, ensure that the rear wheels of the machine are 25 mm (1 inch) off the ground, with the rear axle supported on jack stands.**

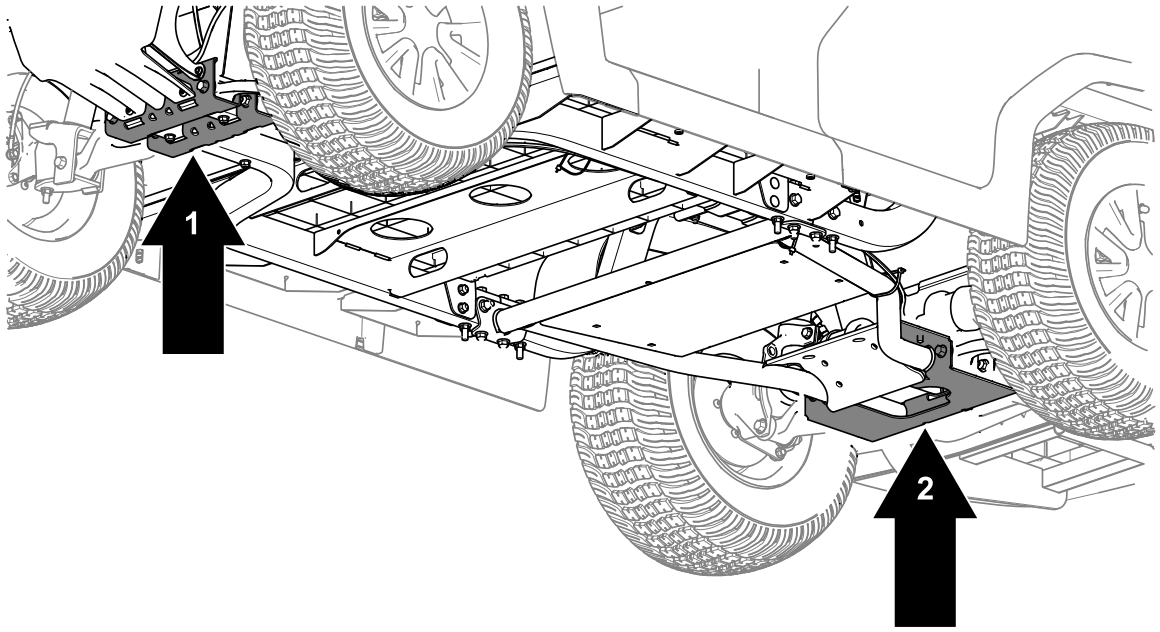

g411857

Figure 26

1. Front lifting point
2. Rear lifting point

Greasing the Front Wheel Bearings

Service Interval: Every 300 hours

Grease specification: Mobilgrease XHP™-222

Removing the Hub and Rotor

1. Lift the front of the machine and support it with jack stands.
2. Remove the wheel cover and the 4 lug nuts that secure the wheel to the hub (Figure 27).

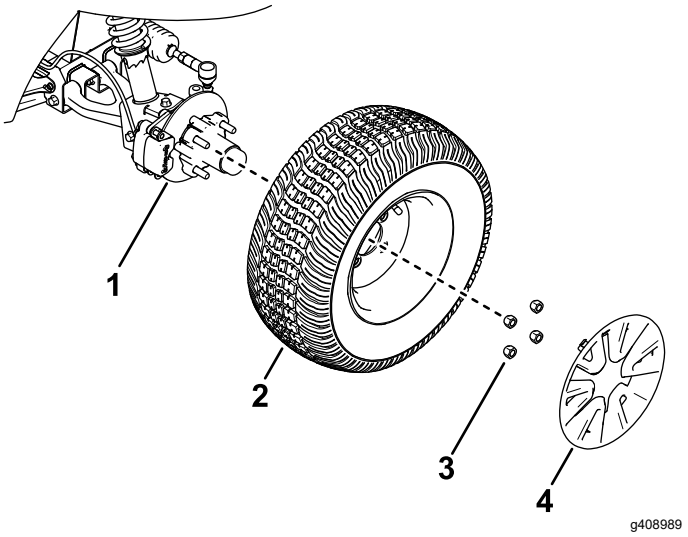

Figure 27

1. Hub
2. Wheel
3. Lug nut
4. Wheel cover

3. Remove the flange-head bolts (3/8 x 3/4 inch) that secure the bracket for the brake assembly to the spindle and separate the brake from the spindle (Figure 28).

   Note: Support the brake assembly before proceeding to the next step.

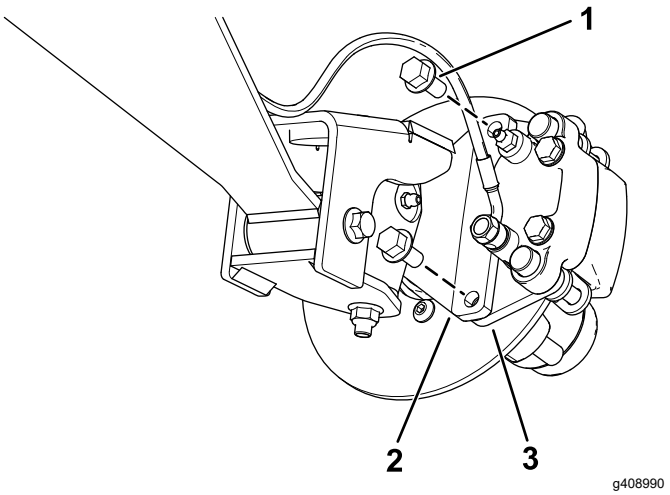

Figure 28

1. Flange-head bolts (3/8 x 3/4 inch)
2. Spindle
3. Caliper bracket (brake assembly)

4. Remove the dust cap from the hub (Figure 29).

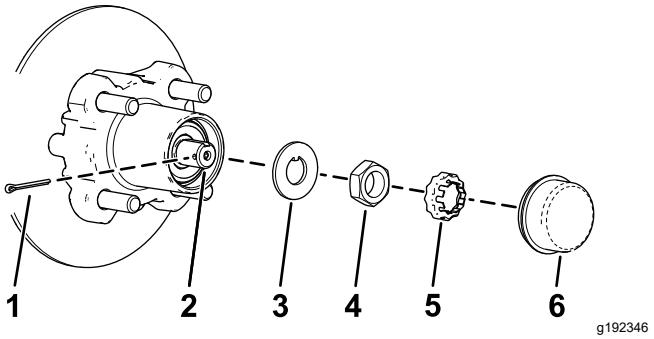

Figure 29

1. Cotter pin
2. Spindle
3. Tab washer
4. Spindle nut
5. Nut retainer
6. Dust cap

5. Remove the cotter pin and nut retainer from the spindle and spindle nut (Figure 29).
6. Remove the spindle nut from the spindle, and separate the hub and rotor assembly from the spindle (Figure 29 and Figure 30).

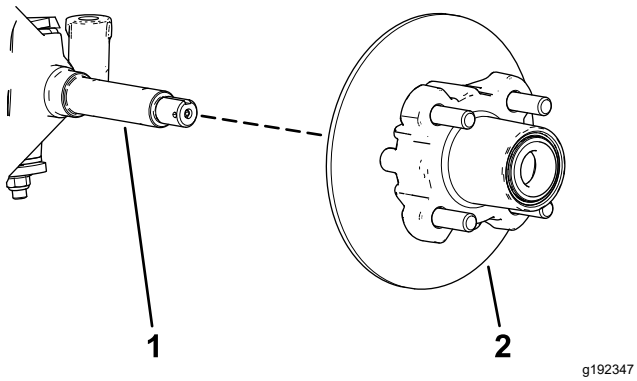

Figure 30

1. Spindle
2. Hub and rotor assembly

7. Wipe clean the spindle with a rag.
8. Repeat steps 1 through 7 to the hub and rotor at the other side of the machine.

Greasing the Wheel Bearings

1. Remove the outboard bearing from the hub (Figure 31).

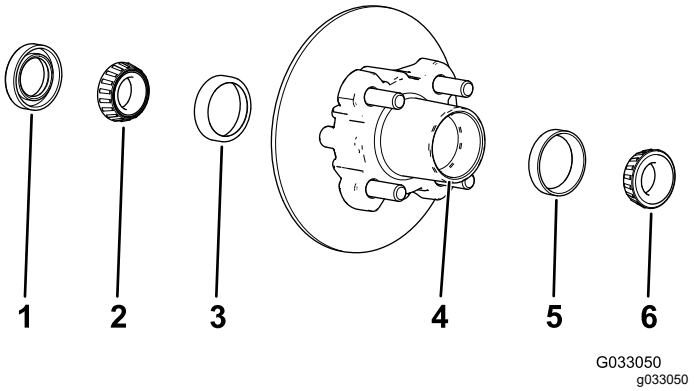

Figure 31

1. Seal
2. Inboard bearing
3. Inboard-bearing race
4. Bearing cavity (hub)
5. Outboard-bearing race
6. Outboard bearing

2. Remove the seal, inboard bearing from the hub (Figure 31).
3. Wipe clean the seal and check for wear and damage.

   Note: Do not use cleaning solvent to clean the seal. Replace the seal if it is worn or damaged.
4. Clean the bearings and races, and check these parts for wear and damage.

   Note: Replace all worn or damaged parts. Ensure that the bearings and races are clean and dry.
5. Clean the cavity of the hub of all grease, dirt, and debris (Figure 31).
6. Pack the bearings with the specified grease.
7. Fill the cavity of hub 50 to 80% full of the specified grease (Figure 31).
8. Assemble the inboard bearing onto the race at the inboard side of the hub and install the seal (Figure 31).
9. Repeat steps 1 through 8 to the bearings for the other hub.

Installing the Hub and Rotor

1. Apply a light coat of the specified grease to the spindle (Figure 32).

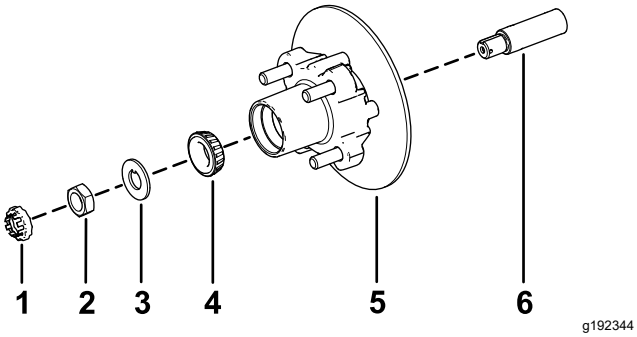

Figure 32

1. Nut retainer
2. Spindle nut
3. Tab washer
4. Outer bearing
5. Hub, rotor, inner bearing, race, and seal
6. Spindle

2. Assemble the hub and rotor onto the spindle with the rotor inboard (Figure 32).
3. Assemble the outboard bearing onto the spindle and seat the bearing to the outboard race (Figure 32).
4. Assemble the tab washer onto the spindle (Figure 32).
5. Thread the spindle nut onto the spindle and tighten the nut to 15 N·m (11 ft-lb), while rotating the hub to seat the bearing (Figure 32).
6. Loosen the spindle nut until the hub rotates freely.
7. Torque the spindle nut to 170 to 225 N·cm (15 to 20 in-lb).
8. Install the retainer over the nut and check the alignment of the slot in the retainer and the hole in the spindle for the cotter pin (Figure 33).

   Note: If the slot in the retainer and the hole in the spindle are not aligned, tighten the spindle nut to align the slot and hole to a maximum torque of 226 N·cm (20 in-lb) on the nut.

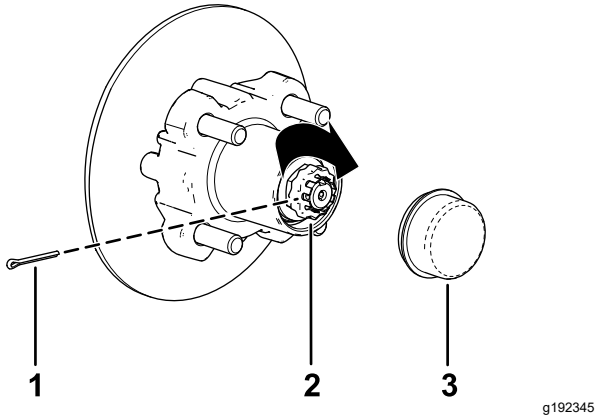

Figure 33

1. Cotter pin
2. Nut retainer
3. Dust cap

9. Install the cotter pin and bend each legs around the retainer (Figure 33).
10. Install the dust cap onto the hub (Figure 33).
11. Repeat steps 1 through 10 for the hub and rotor at the other side of the machine.

Installing the Brakes and Wheels

1. Clean the 2 flange-head bolts (3/8 x 3/4 inch) and apply a coat of medium-strength thread-locking compound to the threads of the bolts.
2. Align the brake pads to either side of the rotor (Figure 28) and the holes in the caliper bracket with the holes in the brake mount of the spindle frame (Figure 32).
3. Secure the caliper bracket to the spindle frame (Figure 28) using the 2 flange-head bolts (3/8 x 3/4 inch).

   Torque the 2 flange-head bolts to 47 to 54 N·m (35 to 40 ft-lb).
4. Align the holes in the wheel to the studs of the hub and assemble the wheel to the hub with the valve stem outward (Figure 27).

   Note: Ensure that the mounting surface of the wheel is flush with the hub.
5. Secure the wheel to the hub using the lug nuts (Figure 27).

   Torque the lug nuts to 108 to 122 N·m (80 to 90 ft-lb).
6. Repeat steps 1 through 5 for the brake and wheel on the other side of the machine.

Electrical System Maintenance

Using the Battery-Disconnect Switch

1. Unplug the power cord to the battery charger if it is connected.
2. Remove or flip up the seat assembly.
3. Move the battery-disconnect switch to the desired position as shown in Figure 34.

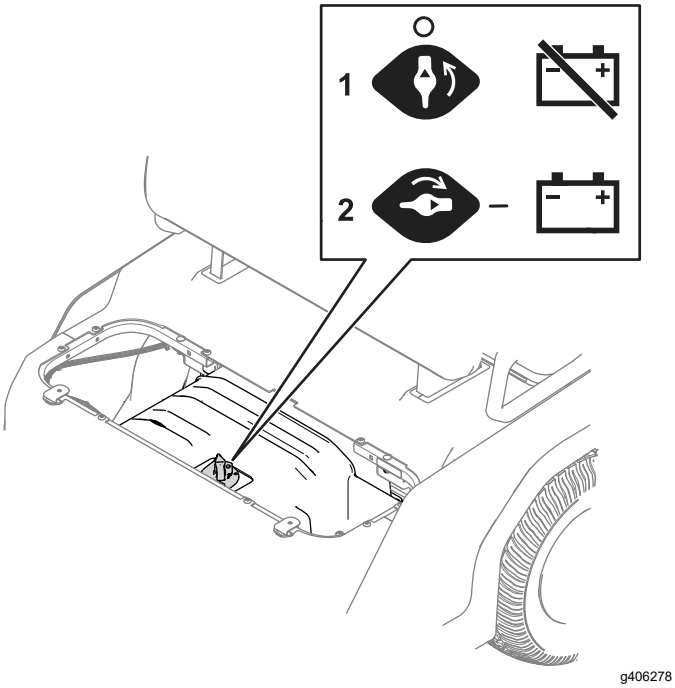

Figure 34

1. Turn the switch to the OFF position to de-energize the machine electrically.
2. Turn the switch to the ON position to energize the machine electrically.

Servicing the Batteries

Note: The machine is equipped with at least 2 lithium-ion batteries.

A lithium-ion battery must be disposed of or recycled in accordance with local and federal regulations. If a battery requires service, contact your authorized Toro distributor for assistance.

Do not open the battery. If you are having problems with a battery, contact your authorized Toro distributor for assistance.

Maintaining the Lithium-Ion Batteries

⚠ WARNING

The batteries contain high voltage, which could burn or shock you.

- **Do not attempt to open the batteries.**
- **Use extreme care when handling a battery with a cracked case.**
- **Use only the charger designed for the batteries.**

The lithium-ion batteries hold a sufficient charge to perform intended work during its life span.

To achieve maximum life and use from your batteries, follow these guidelines:

- Do not open the battery.
- Store/park the machine in a clean, dry garage or storage area, **away from direct sunlight, heat sources, rain, and wet conditions.** Do not store it in a location where the temperature exceeds the range specified in Battery Storage Requirements (page 40). **Temperatures outside of this range will damage your batteries.** High temperatures during storage, especially at a high state of charge, reduces the life of the batteries.
- When storing the machine for more than 10 days, ensure that the machine is in a cool and dry location, out of sunlight, rain, and wet conditions.
- Use lights only when it is necessary.

Maintaining the Battery Charger

Important: **All electrical repairs should be performed by an authorized Toro distributor only.**

The charger requires little maintenance other than protecting it from damage and weather.

- Clean the battery-charger cords and case with a slightly damp cloth after each use.

  Note: Do not clean the dielectric grease from the terminals.
- Coil the cords when not in use.
- Periodically examine the cords for damage, and replace them when necessary with Toro-approved parts.

Locating the Fuses

The 12 V and 60 V fuses are located under the hood (Figure 35).

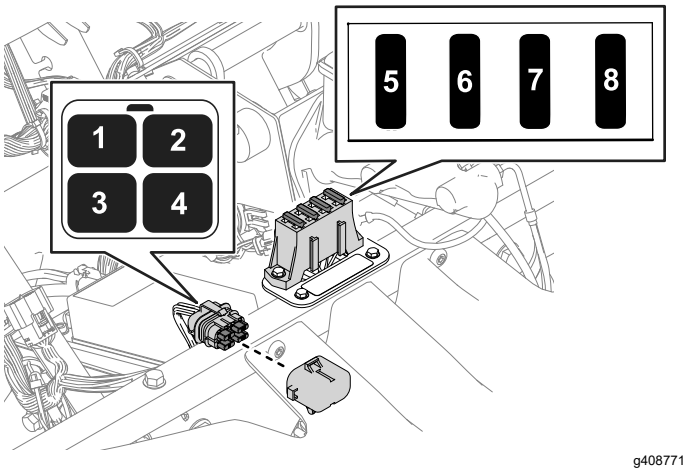

Figure 35

1. USB (5 A)
2. Headlights (10 A)
3. Alarm (5 A)
4. Telematics power (5 A)
5. Horn (20 A)
6. Display (10 A)
7. Main system B+ (10 A)
8. DC to DC converter (20 A)

The battery charger (30 A) and machine power (200 A) fuses are located under the removable seat assembly (Figure 36).

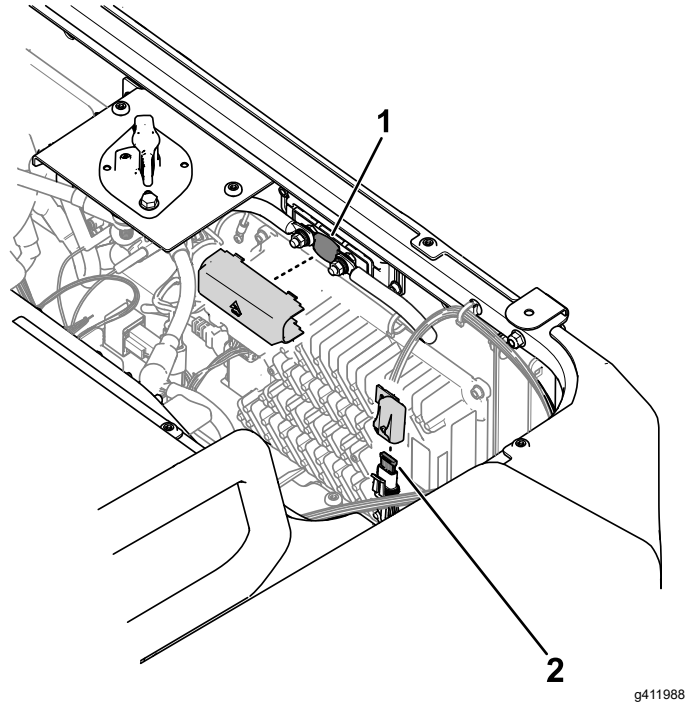

Figure 36

1. Machine-power fuse (200 A)
2. Battery-charger fuse (30 A)

Replacing the Headlight

Specification: See your *Parts Catalog*.

1. Disconnect the battery; refer to Using the Battery-Disconnect Switch (page 34).
2. Remove the hood.
3. Disconnect the wire-harness connector from the headlight connector (Figure 37).

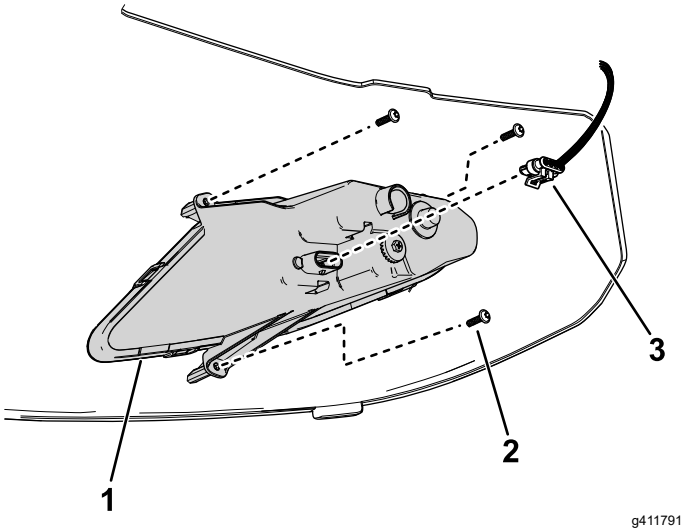

Figure 37

1. Headlight
2. Screw
3. Wire-harness connector

4. Remove the screws that secure the headlight to the hood.

   Note: Retain all parts for installation of the new headlight.

5. Remove the old headlight and use the screws to secure the new headlight to the hood.

   Torque the screws to 1 N·m (9 in-lb).

6. Connect the wire-harness connector to the headlight connector (Figure 37).

Drive System Maintenance

Maintaining the Tires

Service Interval: Every 100 hours—Check the condition of the tires and rims.

Every 100 hours—Torque the wheel-lug nuts.

1. Inspect the tires and rims for signs of wear and damage.

   Note: Operating accidents, such as hitting curbs, can damage a tire or rim and also disrupt wheel alignment, so inspect tire condition after an accident.

2. Torque the wheel lug nuts to 108 to 122 N·m (80 to 90 ft-lb).

Inspecting the Steering and Suspension Components

Service Interval: Every 100 hours—Inspect the steering and suspension for loose or damaged components.

With the steering wheel at the centered position (Figure 38), turn the steering wheel to the left or right. If you turn the steering wheel more than 13 mm (1/2 inch) to the left or right, and the tires do not turn, check the following steering and suspension components to ensure that they are not loose or damaged:

- Steering shaft to the steering-rack assembly joint

  Important: **Inspect the condition and security of the pinion-shaft seal (Figure 39).**

- Steering-rack assembly tie rods

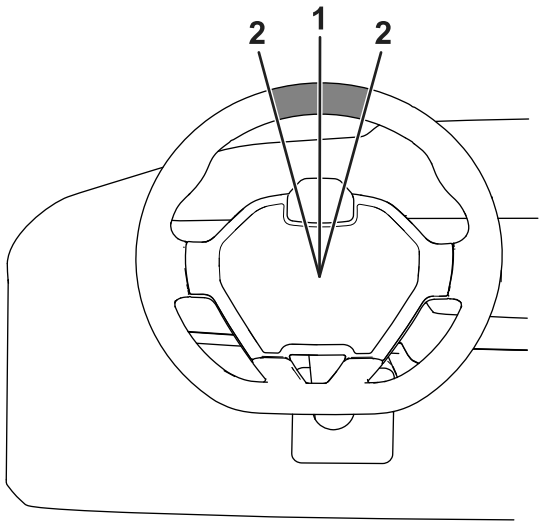

g415333

Figure 38

1. Steering wheel at the centered position
2. 13 mm (1/2 inch) from the center of the steering wheel

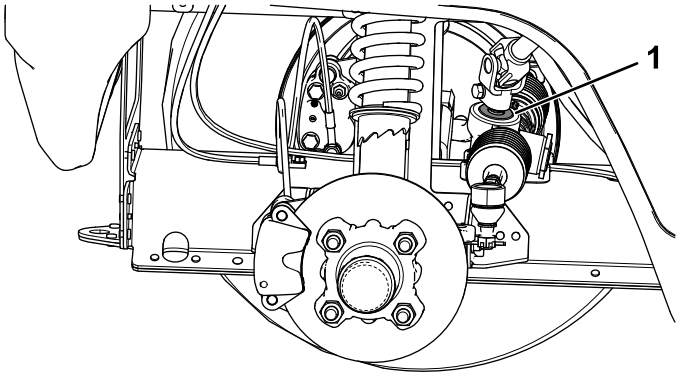

g313576

Figure 39

1. Pinion-shaft seal

Adjusting the Wheel Alignment

Service Interval: Every 100 hours/Yearly (whichever comes first)—Check the front wheel camber and toe-in.

Preparing to Adjust Camber or Toe-in

1. Check the tire pressure to ensure that the front tires are inflated to 138 kPa (20 psi).
2. Either add weight to the driver's seat equal to the average operator who will run the machine, or have an operator sit on the seat. The weight or operator must remain on the seat for the duration of the adjustment procedure.

3. On a level surface, roll the machine straight back 2 to 3 m (6 to 10 ft) and then straight forward to the original starting position. This allows the suspension to settle into the operating position.

Adjusting the Camber

Owner provided tools: spanner wrench, Toro Part 132-5069; refer to your authorized Toro distributor.

Important: **Make the camber adjustments only if you are using a front attachment or if there is uneven tire wear.**

Note: This procedure can be performed on the front and rear tires.

1. Check the camber alignment at each wheel; the alignment should be as close to neutral (zero) as possible.

   Note: The tires should be aligned with the tread evenly on the ground to reduce uneven wear.

2. If the wheel camber is out of alignment, use the spanner wrench to rotate the collar on the shock absorber to align the wheel (Figure 40).

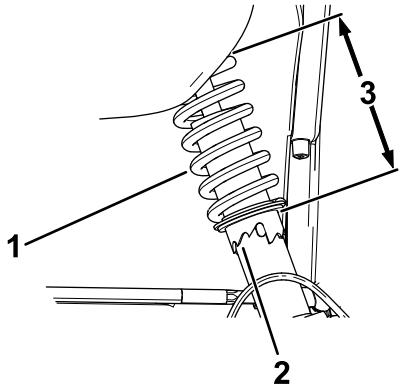

g411802

Figure 40

1. Shock-absorber spring
2. Collar
3. Spring length

Adjusting the Front Wheel Toe-in

Important: **Before adjusting toe-in, ensure that the camber adjustment is as close to neutral as possible; refer to Adjusting the Camber (page 37).**

1. Measure the distance between both of the front tires at the axle height at both the front and rear of the front tires (Figure 41).

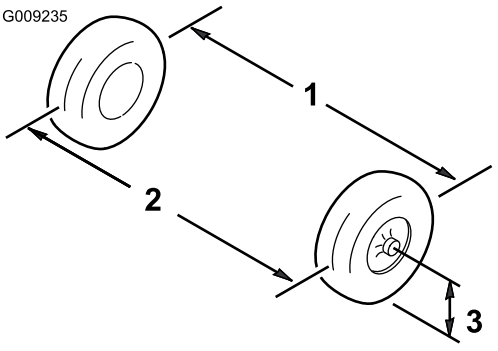

g009235

Figure 41

1. Tire center line—back
2. Tire center line—front
3. Axle center line

2. If the measurement does not fall within 0 to +/- 3 mm (0 to +/- 1/8 inch), loosen the jam nuts at the outer end of the tie rods (Figure 42).

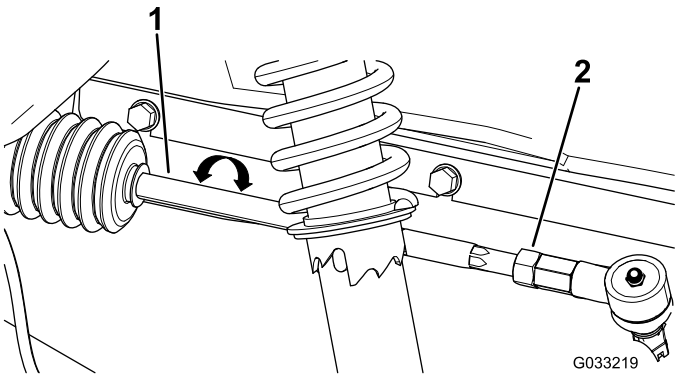

g033219

Figure 42

1. Tie rod
2. Jam nut

3. Rotate both tie rods to move the front of the tire inward or outward.
4. Tighten the tie rod jam nuts when the adjustment is correct.
5. Ensure that there is full travel of the steering wheel in both directions.

Checking the Transaxle-Fluid Level

Service Interval: Every 250 hours

Fluid Type: Mobilfluid™ 424

1. Remove the fill plug on the transaxle (Figure 43).

   Note: The fluid level should be even with the bottom of the fill plug.

2. If the fluid level is low, remove the fill plug and add the specified fluid until it runs out of the hole (Figure 43).

3. Replace the fill plug and torque it to 27 to 41 N·m (20 to 30 ft-lb).

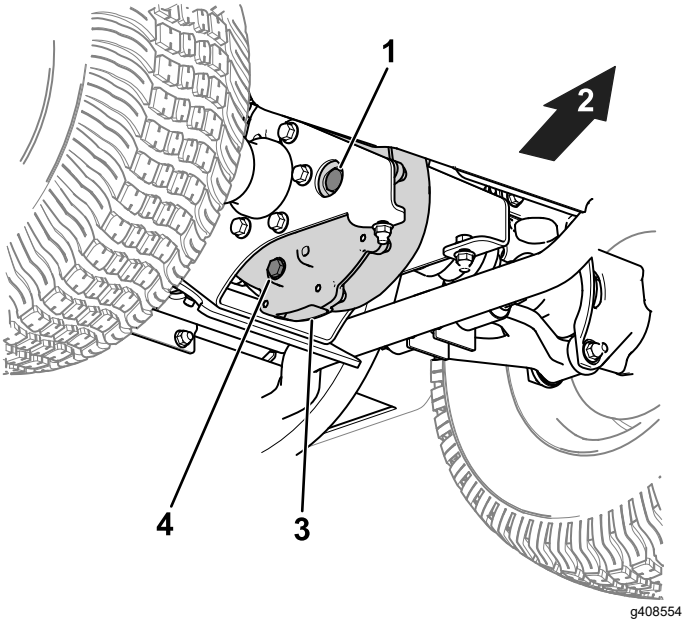

Figure 43

Subframe parts removed for clarity.

1. Fill plug
2. Rear of the machine
3. Transaxle
4. Drain plug

Changing the Transaxle Fluid

Service Interval: Every 500 hours

Fluid Type: Mobilfluid™ 424

Fluid Capacity: 0.95 L (32 fl oz)

1. Align a drain pan under the drain plug (Figure 43).
2. Remove the fill plug (Figure 43).

   Note: Retain the fill plug and seal for installation in step 6.
3. Remove the drain plug, and allow the fluid to drain completely (Figure 43).

   Note: Retain the drain plug for installation in step 4.
4. Install the drain plug and torque it to 12 to 19 N·m (9 to 14 ft-lb).
5. Fill the transaxle with the specified fluid and capacity until it is even with the fill hole.
6. Install the fill plug and torque it to 27 to 41 N·m (20 to 30 ft-lb).

Brake Maintenance

Checking the Brakes

Service Interval: Every 100 hours

Important: **Brakes are a critical safety component of the machine. Closely inspect them at the recommended service interval to ensure optimum performance and safety.**

- Check the brake lining for wear or damage. If the lining (brake pad) thickness is less than 1.6 mm (1/16 inch), replace the brake lining.
- Check the backing plate and other components for signs of excessive wear or deformation. Replace any deformed components.
- Check the brake-fluid level; refer to Checking the Brake-Fluid Level (page 38).

Checking the Brake-Fluid Level

Service Interval: Before each use or daily—Check the brake-fluid level. Check the brake-fluid level before you start the machine.

Brake-fluid type: DOT 3

1. Remove the hood to access to the master brake cylinder and reservoir (Figure 44).

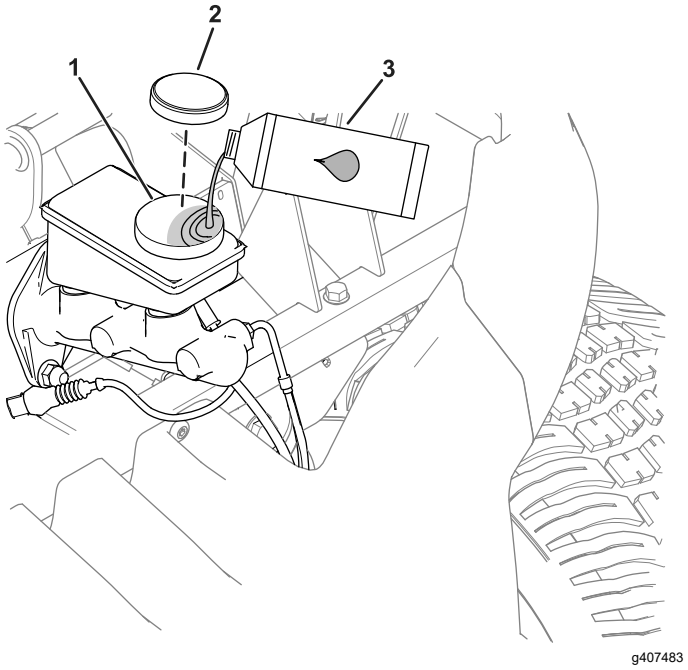

Figure 44

1. Filler neck (reservoir)
2. Reservoir cap
3. DOT 3 brake fluid

2. Look at the outline of the fluid level at the side of the reservoir (Figure 45).

   Note: The level should be above the Minimum line.

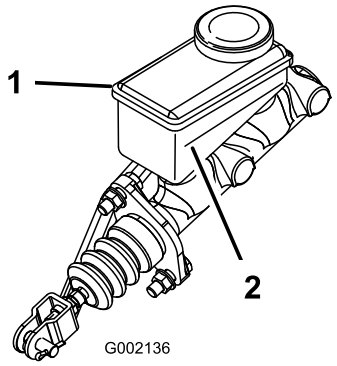

g002136

Figure 45

1. Brake-fluid reservoir
2. Minimum line

3. If the fluid level is low, preform the following:
   A. Clean the area around the reservoir cap and remove the cap (Figure 44).
   B. Add DOT 3 brake fluid to the reservoir until the fluid level is above the Minimum line (Figure 45).

      Note: Do not overfill the reservoir with brake fluid.
   C. Install the reservoir cap (Figure 44).
4. Close the hood.

Replacing the Service and Parking-Brake Pads

Service Interval: Every 400 hours

Contact your authorized Toro distributor to inspect and possibly replace the service-brake pads.

Changing the Brake Fluid

Service Interval: Every 1,000 hours/Every 5 years (whichever comes first)—Change the brake fluid.

Contact your authorized Toro distributor.

Cleaning

Washing the Machine

Service Interval: Before each use or daily—Wash the machine.

Wash the machine as needed using water alone or with a mild detergent. You may use a rag when washing the machine.

Important: **Do not use brackish or reclaimed water to clean the machine.**

Important: **Pressurized water is not recommended when washing the machine. It may damage the electrical system, loosen important decals, or wash away necessary grease at friction points. Avoid excessive use of water, especially near the control panel, motor, motor controller, charger, back of the dashboard, and batteries.**

Storage

Storage Safety

- Shut off the machine, remove the key, and wait for all movement to stop before you leave the operator's position. Allow the machine to cool before adjusting, servicing, cleaning, or storing it.
- The owner is responsible for periodically inspecting the charging and storage areas or facilities and review procedures to ensure that the requirements are being followed.

Storing the Machine

1. Park the machine on a level surface, engage the parking brake, shut off the machine, and remove the key.
2. Clean dirt and grime from the entire machine, including the outside of the motor housing.

   Important: **You can wash the machine with mild detergent and water. Do not use high-pressure water to wash the machine. Pressure-washing may damage the electrical system or wash away necessary grease at friction points. Avoid excessive use of water, especially near the control panel, lights, motor, and battery.**
3. Check the brakes; refer to Checking the Brakes (page 38).
4. Check the tire pressure; refer to Checking the Tire Pressure (page 17).
5. Check and tighten all bolts, nuts, and screws. Repair or replace any part that is damaged.
6. Paint all scratched or bare metal surfaces.

   Note: Paint is available from your authorized Toro distributor.
7. Cover the machine to protect it and keep it clean.

Battery Storage Requirements

Note: You do not need to remove the batteries from the machine for storage.

Refer to the temperature limits for storage in the following table:

Temperature Limits for Storage

Storage Temperature	Appropriate Storage Time
45° to 55°C (113° to 131°F)	1 week
25° to 45°C (77° to 113°F)	3 weeks
-20° to 25°C (-4° to 77°F)	52 weeks

Important: **Temperatures outside of these ranges will damage your batteries.**

The temperature that the batteries are stored at will affect their long-term life. Storage for long periods of time at extreme temperatures will reduce the battery life. For temperatures above 25°C (77°F), only store the machine for the appropriate amount of time indicated in the table.

- Before you store the machine, charge or discharge the batteries between 40% to 60%.

  Note: A 50% charge is optimal to ensure a maximum battery life. When the batteries are charged to 100% before storage, the battery life shortens.

  If you anticipate that the machine will be stored for a longer period of time, charge the batteries to around 60%.
- For every 6 months of storage, check the battery-charge level and ensure that it is between 40% to 60%. If the charge is below 40%, charge the batteries between 40% to 60%.
- After charging the batteries, disconnect the battery charger from power.
- If you leave the charger on the machine, it will shut off after the batteries are fully charged and does not turn back on unless the charger is disconnected and reconnected.

Notes:

Notes:

California Proposition 65 Warning Information

What is this warning?

You may see a product for sale that has a warning label like the following:



WARNING: Cancer and Reproductive Harm—www.p65Warnings.ca.gov.

What is Prop 65?

Prop 65 applies to any company operating in California, selling products in California, or manufacturing products that may be sold in or brought into California. It mandates that the Governor of California maintain and publish a list of chemicals known to cause cancer, birth defects, and/or other reproductive harm. The list, which is updated annually, includes hundreds of chemicals found in many everyday items. The purpose of Prop 65 is to inform the public about exposure to these chemicals.

Prop 65 does not ban the sale of products containing these chemicals but instead requires warnings on any product, product packaging, or literature with the product. Moreover, a Prop 65 warning does not mean that a product is in violation of any product safety standards or requirements. In fact, the California government has clarified that a Prop 65 warning "is not the same as a regulatory decision that a product is 'safe' or 'unsafe.'" Many of these chemicals have been used in everyday products for years without documented harm. For more information, go to https://oag.ca.gov/prop65/faqs-view-all.

A Prop 65 warning means that a company has either (1) evaluated the exposure and has concluded that it exceeds the "no significant risk level"; or (2) has chosen to provide a warning based on its understanding about the presence of a listed chemical without attempting to evaluate the exposure.

Does this law apply everywhere?

Prop 65 warnings are required under California law only. These warnings are seen throughout California in a wide range of settings, including but not limited to restaurants, grocery stores, hotels, schools, and hospitals, and on a wide variety of products. Additionally, some online and mail order retailers provide Prop 65 warnings on their websites or in catalogs.

How do the California warnings compare to federal limits?

Prop 65 standards are often more stringent than federal and international standards. There are various substances that require a Prop 65 warning at levels that are far lower than federal action limits. For example, the Prop 65 standard for warnings for lead is 0.5 µg/day, which is well below the federal and international standards.

Why don't all similar products carry the warning?

- Products sold in California require Prop 65 labelling while similar products sold elsewhere do not.
- A company involved in a Prop 65 lawsuit reaching a settlement may be required to use Prop 65 warnings for its products, but other companies making similar products may have no such requirement.
- The enforcement of Prop 65 is inconsistent.
- Companies may elect not to provide warnings because they conclude that they are not required to do so under Prop 65; a lack of warnings for a product does not mean that the product is free of listed chemicals at similar levels.

Why does Toro include this warning?

Toro has chosen to provide consumers with as much information as possible so that they can make informed decisions about the products they buy and use. Toro provides warnings in certain cases based on its knowledge of the presence of one or more listed chemicals without evaluating the level of exposure, as not all the listed chemicals provide exposure limit requirements. While the exposure from Toro products may be negligible or well within the "no significant risk" range, out of an abundance of caution, Toro has elected to provide the Prop 65 warnings. Moreover, if Toro does not provide these warnings, it could be sued by the State of California or by private parties seeking to enforce Prop 65 and subject to substantial penalties.



Count on it.