PH-MR

HEARTH & HOME technologies

Models: 6K, 8K, 6KL, 8KL, 6KX, 8KX, CAL36, CAL42, CAL36X, CAL42X, MER36, MER42, MER36P, MER42P, 6KMOD, 8KMOD, MER36MN, MER42MN

Passive Heat Kit Installation Instructions

Leave this manual with party responsible for use and operation.

CAUTION! Risk of Cuts, Abrasions or Flying Debris. *Wear protective gloves and safety glasses during installation. Sheet metal edges are sharp.*

CAUTION! Do not install damaged components. *If any parts are missing or damaged, contact your dealer before starting installation.* ***DO NOT*** *install a damaged kit.*

DANGER

HOT GLASS WILL CAUSE BURNS.

DO NOT TOUCH GLASS UNTIL COOLED.

NEVER ALLOW CHILDREN TO TOUCH GLASS.

A barrier designed to reduce the risk of burns from the hot viewing glass is provided with this appliance and must be installed for the protection of children and other at-risk individuals.

Table of Contents

Introduction 1
Preparation 1
Kit Contents 2
Clearances 3
Good Faith TV Guidelines 4
Framing Dimensions- Passive Heat Front Discharge 5
Framing Dimensions - Passive Heat Side Discharge 6
Framing Dimensions - Passive Heat Open Top Discharge . . 7
Adapter Installation - Front, Side and Open Top Discharge . . 8
Passive Heat Template - Front and Side Discharge 9
Finishing 10
Painting 10
Install Register Cover - Side Discharge Only 12
Mantel Projections 12
Installation of Passive Heat with Other Optional Heat Management Systems 13
Maintenance 13

Introduction

The Passive Heat (PH-MR) Heat Management System conveys warm air from the fireplace into the same room through either one front discharge slot, two side discharge heat registers or an open top discharge.

Installation of the Passive Heat kit must be done in conjunction with the appliance installation. Installation of this kit **MUST** be performed by a qualified service technician.

WARNING! Risk of Fire! DO NOT *install the Passive Heat (PH-MR) Heat Management System with models that are not approved. Overheating will occur.*

The Passive Heat Trim Kit is also available for installation with the Front Discharge Passive Heat systems and must be purchased separately. Contact your dealer to order the appropriate kit:

PH-FRTTRIM-36

PH-FRTTRIM-42

Side Discharge Passive Heat systems require the use of the Register Cover Kit (PH-SIDETRIM), which must be purchased separately, to complete the installation. Contact your dealer to order the kit.

Follow instructions included with the trim kit to complete installation of the Passive Heat system.

The Passive Heat kit is tested and safe when installed in accordance with this installation manual. It is your responsibility to read all instructions before starting installation and to follow these instructions carefully during installation.

The Passive Heat kit is carefully engineered and must be installed only as specified. If you modify it or any of its components you will void the warranty, and you may possibly cause a fire hazard. Installation must be done according to applicable local, state, provincial, and/or national codes.

Preparation

Plan the location of the appliance.

Determine whether front, open top or side discharge is to be installed and follow instructions for the appropriate application.

CAUTION! Risk of Burns!

- *The fireplace should be turned off and cooled before kit is installed.*
- *Shut off gas supply.*

NOTICE: *A mantel is required if a fan is installed. Damage to TV could occur.*

Power Vent Option

If an optional power vent will be installed in conjunction with the Passive Heat Kit, Hearth & Home Technologies recommends the PVLP-SLP or PVV-SLP power vent options. If the application does not allow for the PVLP-SLP or PVV-SLP to be used, the PVI-SLP-B may be used. The PVI-SLP-B must be mounted outside the chase due to the higher noise level created.

For AU models, PVLP-SLP-AU is approved to be used in conjunction with the Passive Heat Kit.

Kit Contents

Verify and remove contents from packaging before beginning installation. See Figure 1.

PH-MR Kit Contents

DESCRIPTION	SERVICE PART NO.	QTY
Passive Heat Template	2617-137	4
Passive Heat Adapter	2617-302	2
Rear Cover	2583-185	2
Front Cover	2583-186	1
Screw	030-860/8	1

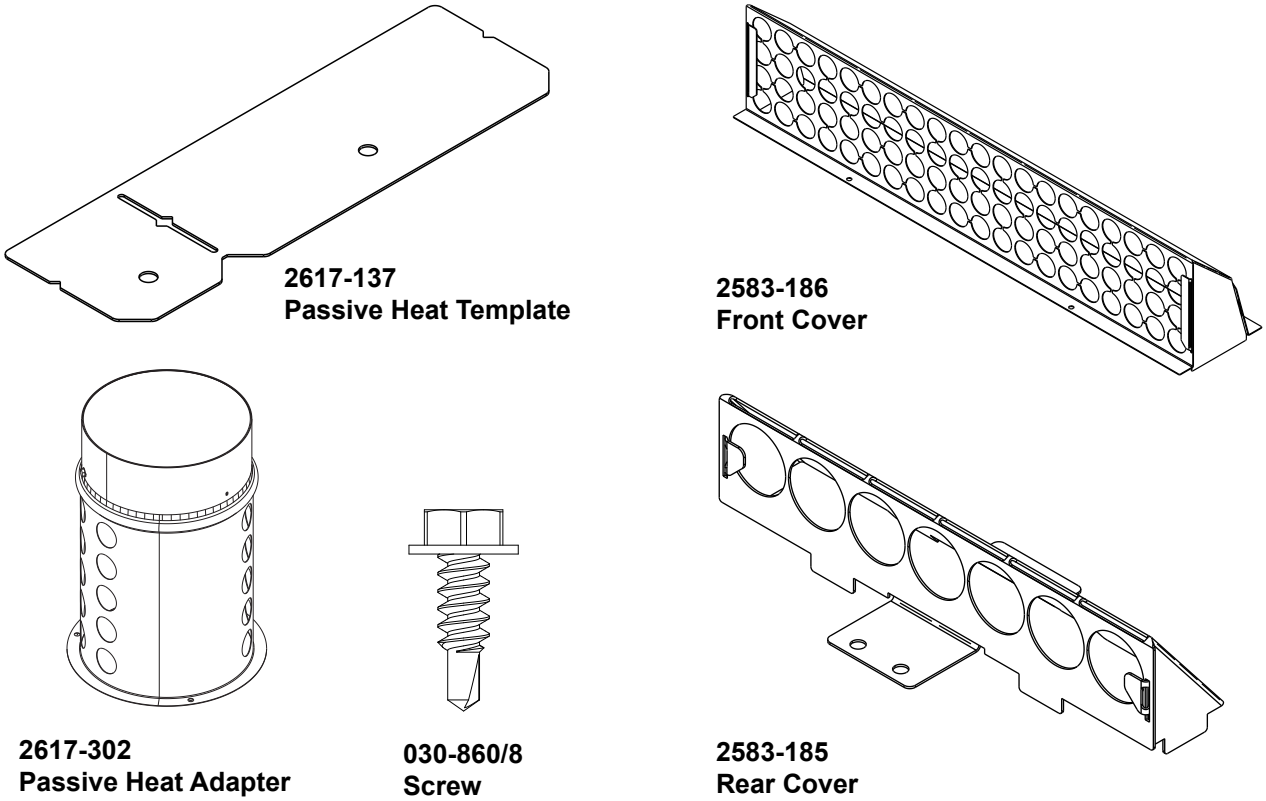

Figure 1 Passive Heat Kit Contents

Clearances

WARNING! Risk of Fire! Maintain clearances to combustibles as specified.

Ensure all clearances are maintained.

- Maintain minimum distance from top of appliance opening to the room ceiling. Refer to the figures in the Framing section of this instruction.
- An open space, or "cavity," is allowed up to three inches above the top of the passive heat discharge opening. A chase ceiling is required when the open space "cavity" exceeds three inches above the discharge opening. Construct the false ceiling from material such as metal, drywall or plywood.

Clearance - Sprinkler to Passive Heat

Figure 2 references the clearances that must be adhered to when installing a sprinkler head near a passive heat discharge opening.

* If the distance from the top of the passive heat front discharge opening to the ceiling is 36 in. (914 mm) or greater, then there is no 36 in. (914 mm) clearance requirement. This is for a ceiling sprinkler head installation only.

Note: When installing a sprinkler head near a heat discharge opening, it is recommended to use a sprinkler head with an Extra High sprinkler activation temperature rating.

- When installing a sprinkler head exterior of the chase, maintain the following clearances to discharge openings (convection slots, passive heat registers, heat zone registers, etc.): 36 in. (914 mm) top, 18 in. (457 mm) sides and 6 in. (152 mm) bottom.
- **DO NOT** install a sprinkler head inside a chase that is set up for passive heat.

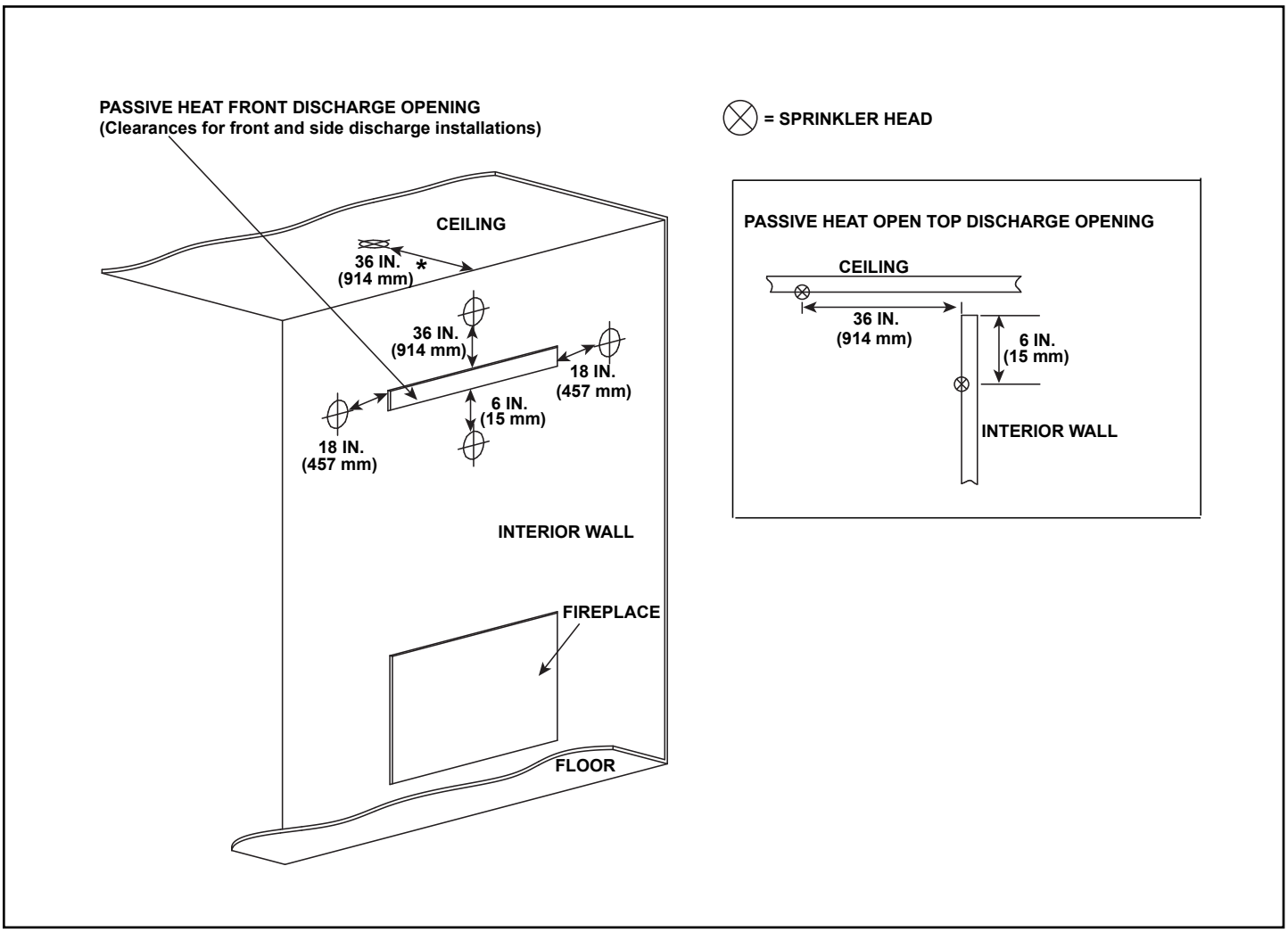

Figure 2

Good Faith Guidelines for TV Installations Above a Fireplace with Passive Heat Option

WARNING! Risk of Fire! *Mesh screen required on bottom of discharge opening when discharge opening is greater than 3 in. (76 mm). Secure mesh to top of framing.*

Mantel Requirements: Some mantel restrictions apply depending on model, installation or additional accessories. See Mantel Projections section for details.

NOTICE: *A mantel is required if a fan is installed. Damage to TV could occur.*

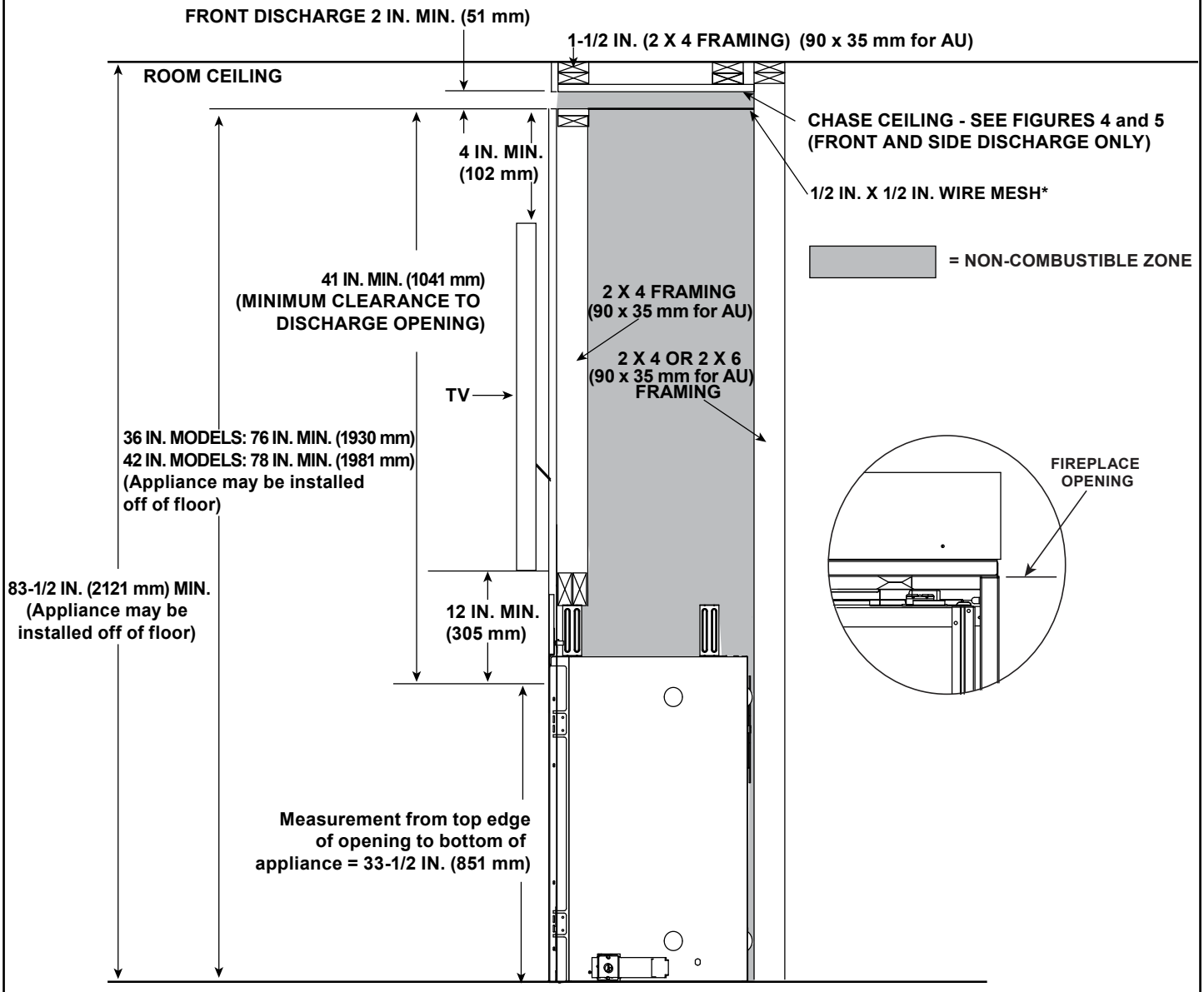

* Wire mesh required for front discharge or open top discharge passive heat installations with discharge opening of three inches or greater.

NOTE: The TV installation requirements are the same regardless of whether the Passive Heat kit is installed with a top discharge, side discharge or open top discharge.

Figure 3

Framing Dimensions- Passive Heat Front Discharge

Front Discharge: Air conveyed into the room through one front discharge slot.

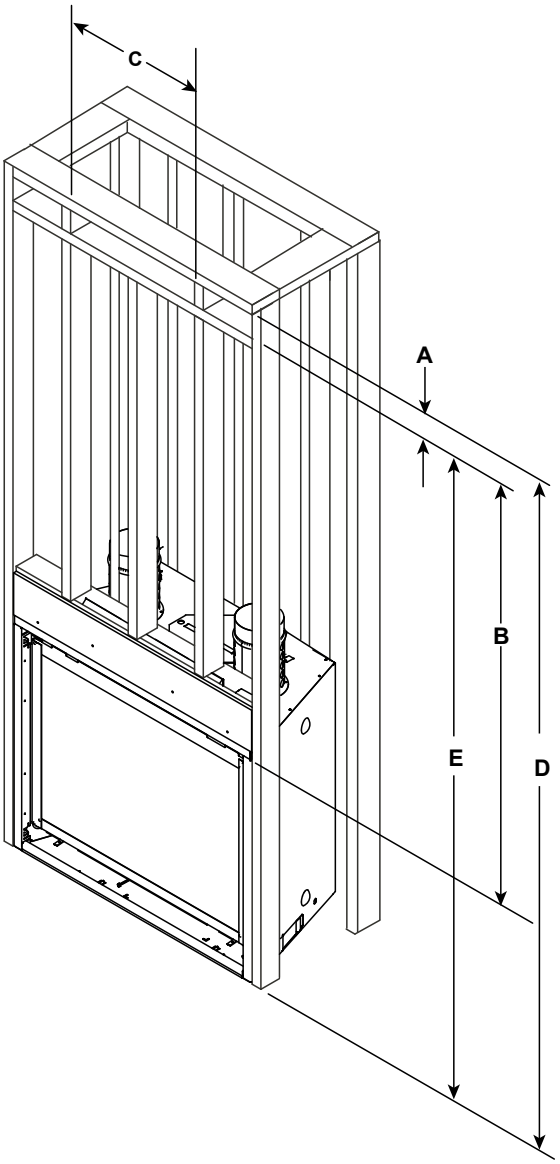

CHASE DETAIL

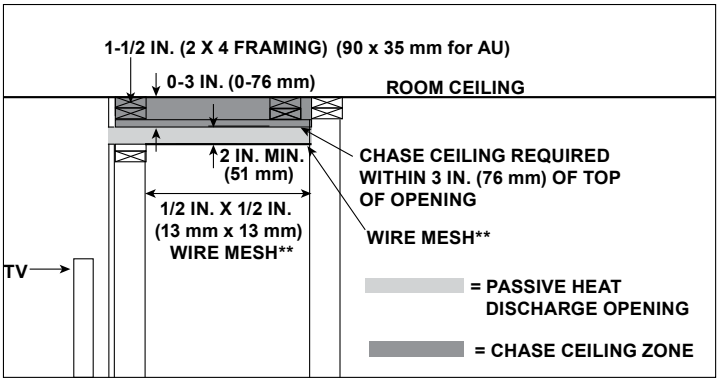

WARNING! Risk of Fire! *Wire mesh required on bottom of discharge opening (Dimension A) when finished discharge opening is greater than 3 in. (76 mm). Secure mesh to top of framing.*

FRONT DISCHARGE MINIMUM FRAMING DIMENSIONS							
		A		B	C	D	E
		TRIM KIT* INSTALLED	NO TRIM KIT**				
		Required Height of Discharge Opening	Height of Discharge Opening	Clearance to Top of Discharge Opening	Width of Discharge Opening	Clearance to Top of Discharge Opening From Bottom of Appliance	Clearance to Bottom of Discharge Opening from Bottom of Appliance
6000 / 36	Inches	3-1/2	2	41	36-1/2	78	76
	millimeters	89	51	1041	927	1981	1930
8000 / 42	Inches	3-1/2	2	43	42-1/2	80	78
	millimeters	89	51	1092	1080	2032	1981

*** Measurement for Trim Kit (PH-FRTTRIM-36 or PH-FRTTRIM-42) = 3-1/2 in. (89 mm) + Additional Finishing Material Thickness**

**** Measurement without Trim Kit = 2 in. (51 mm) + Additional Finishing Material Thickness. If finished discharge opening height is greater than 3 in. (76 mm), wire mesh is required.**

Figure 4 Passive Heat Front Discharge Framing Dimensions With and Without a Trim Kit

Framing Dimensions - Passive Heat Side Discharge

Side Discharge: Air conveyed into the room through two discharge registers, one on each side of appliance.

***WARNING! Risk of Fire! DO NOT** place combustible objects or combustible materials in non-combustible zone. Appliance and combustible materials will overheat.*

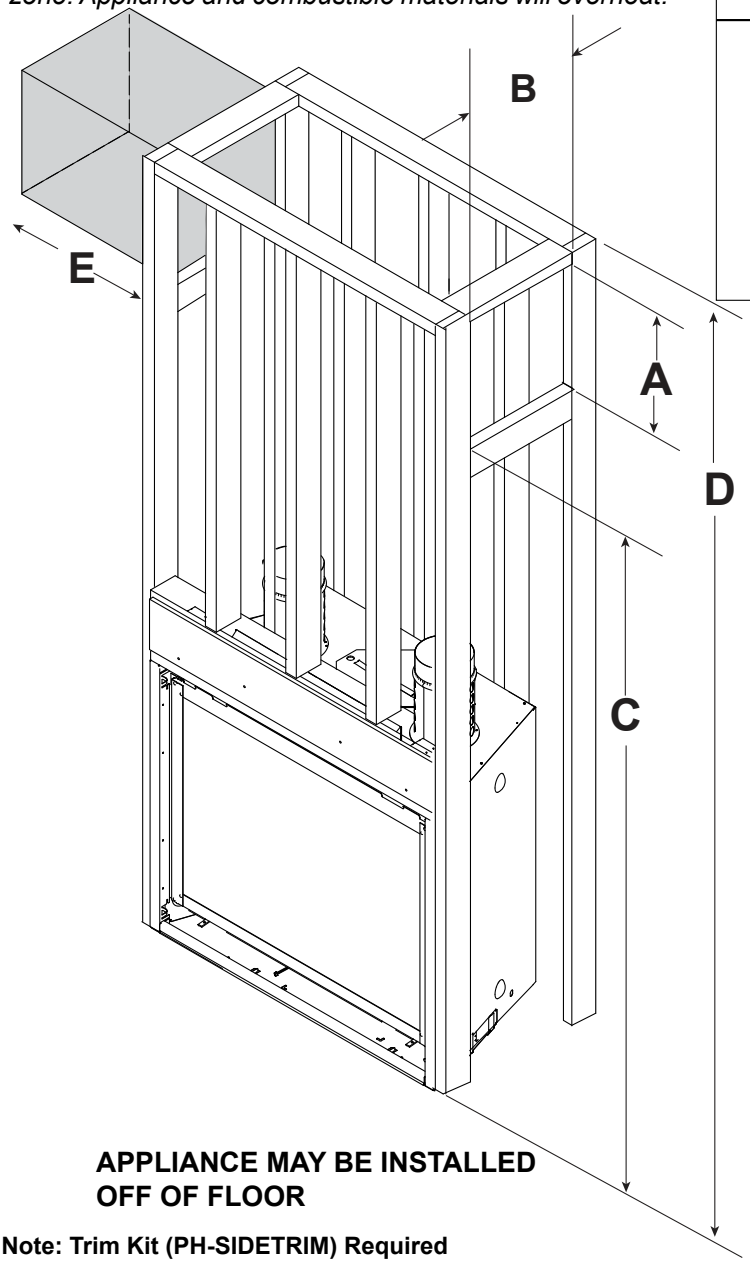

APPLIANCE MAY BE INSTALLED OFF OF FLOOR

CHASE DETAIL

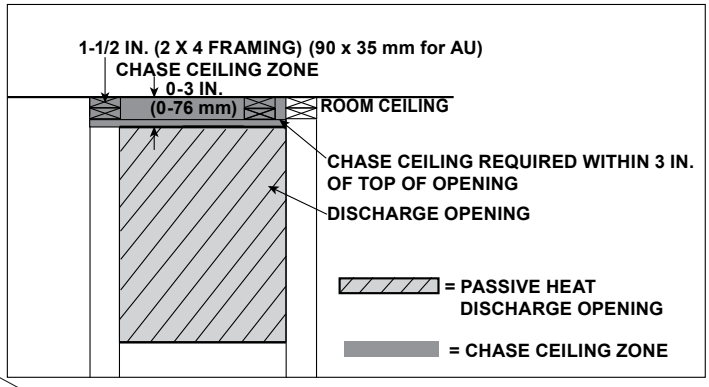

Note: Trim Kit (PH-SIDETRIM) Required

SIDE DISCHARGE FRAMING DIMENSIONS						
		A	B	C	D	E
		Height of Discharge Opening	Width of Discharge Opening	Minimum Clearance to Discharge Opening From Bottom of Appliance	Minimum Clearance to Ceiling from Bottom of Appliance	Minimum Clearance to Combustible Materials
6000 / 36 8000 / 42	Inches	12-1/4	8-3/4	68-1/4	83-1/2	18
	millimeters	311	222	1734	2121	457

Figure 5 Passive Heat Side Discharge Framing Dimensions

Framing Dimensions - Passive Heat Open Top Discharge

Open Top Discharge: Both sides and the top are open allowing air to be conveyed into the room.

WARNING! Risk of Fire! *Mesh screen required on bottom of discharge opening when discharge opening is greater than 3 in, (76 mm). Secure mesh to top of framing.*

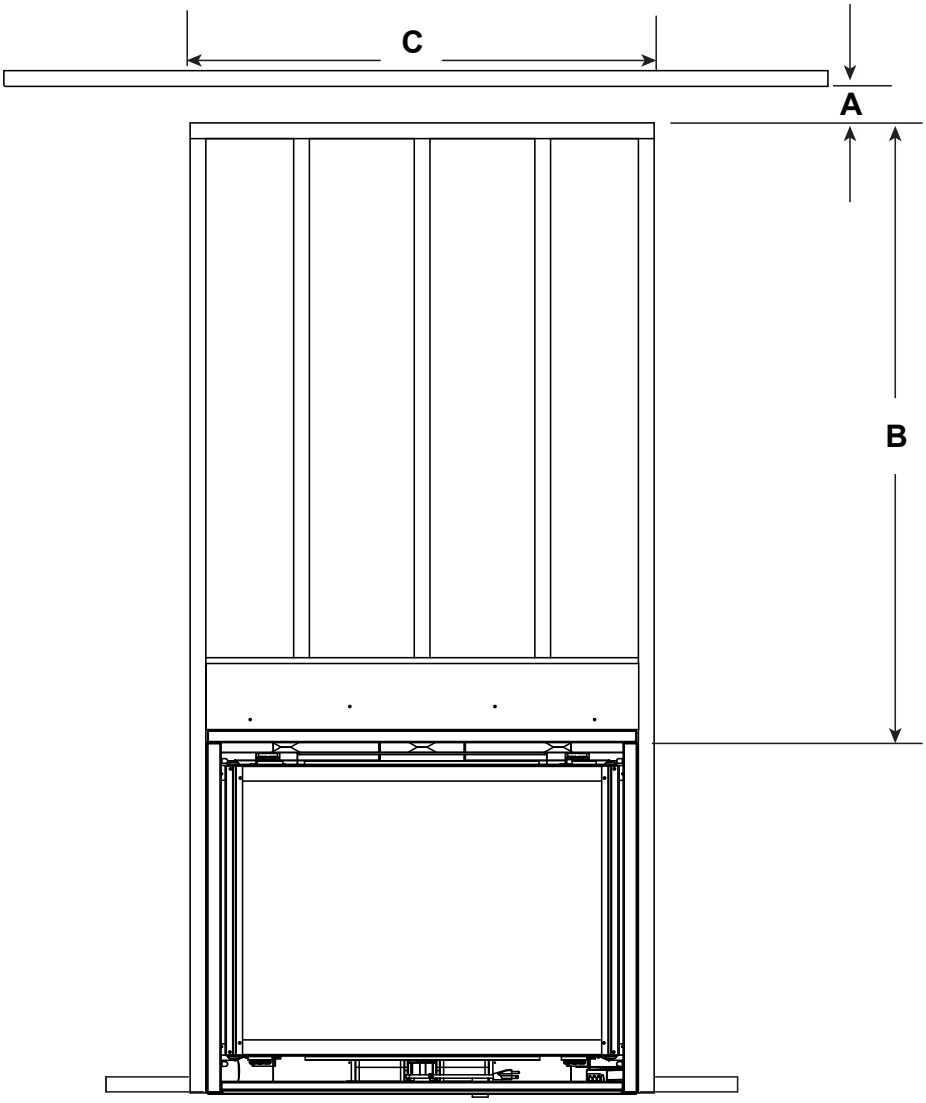

OPEN TOP DISCHARGE MINIMUM FRAMING DIMENSIONS				
		A*	B	C
		Height of Discharge Opening	Clearance to Discharge Opening	Width of Discharge Opening
6000 / 36	Inches	2	41	36-1/2
	millimeters	51	1041	927
8000 / 42	Inches	2	41	42-1/2
	millimeters	51	1041	1080

* Mesh screen required for front discharge or open top discharge passive heat installations with discharge opening of 3 in. (76 mm) or greater.

Figure 6 Passive Heat Minimum Framing Dimensions Open Top Discharge

Adapter Installation - Front, Side and Open Top Discharge

CAUTION! Risk of Cuts, Abrasions or Flying Debris. *Wear protective gloves and safety glasses during installation. Sheet metal edges are sharp.*

1. Remove rear standoffs and discard. Retain two screws. See Figure 7.
2. Remove five knockouts from outer wrap as shown in Figure 7 (A). It is recommended to use a tin snips for removal of knockouts in order to avoid damage to appliance. Remove the remaining two knockouts, located inside the upper heat shield, as shown in Figure 7 (B). Discard knockout pieces and ensure no other material or debris is blocking the hole created by removing the knockout.
3. Remove the elbow heat shield. See Figure 7.A.
4. Center adapter over opening with the solid portion facing the front of the appliance as shown in Figure 8. Attach both adapters to appliance by installing three screws per adapter. Figure 8 shows adapters installed.

Note: If installing an additional Heat Management System, refer to the instructions included with the kit for further installation instructions.

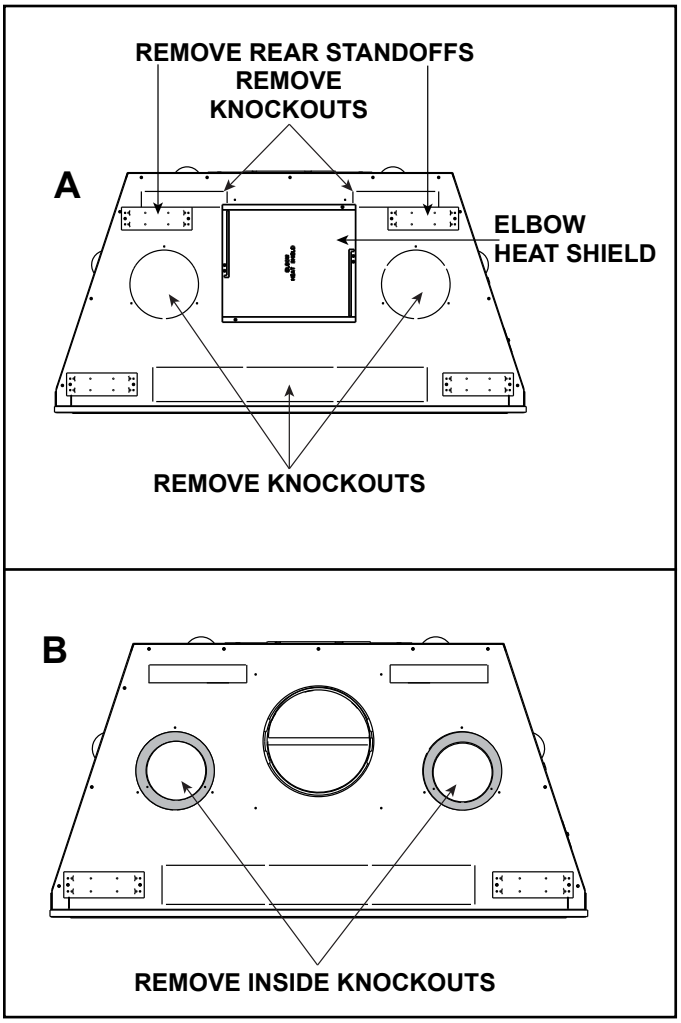

Figure 7 Remove Knockouts

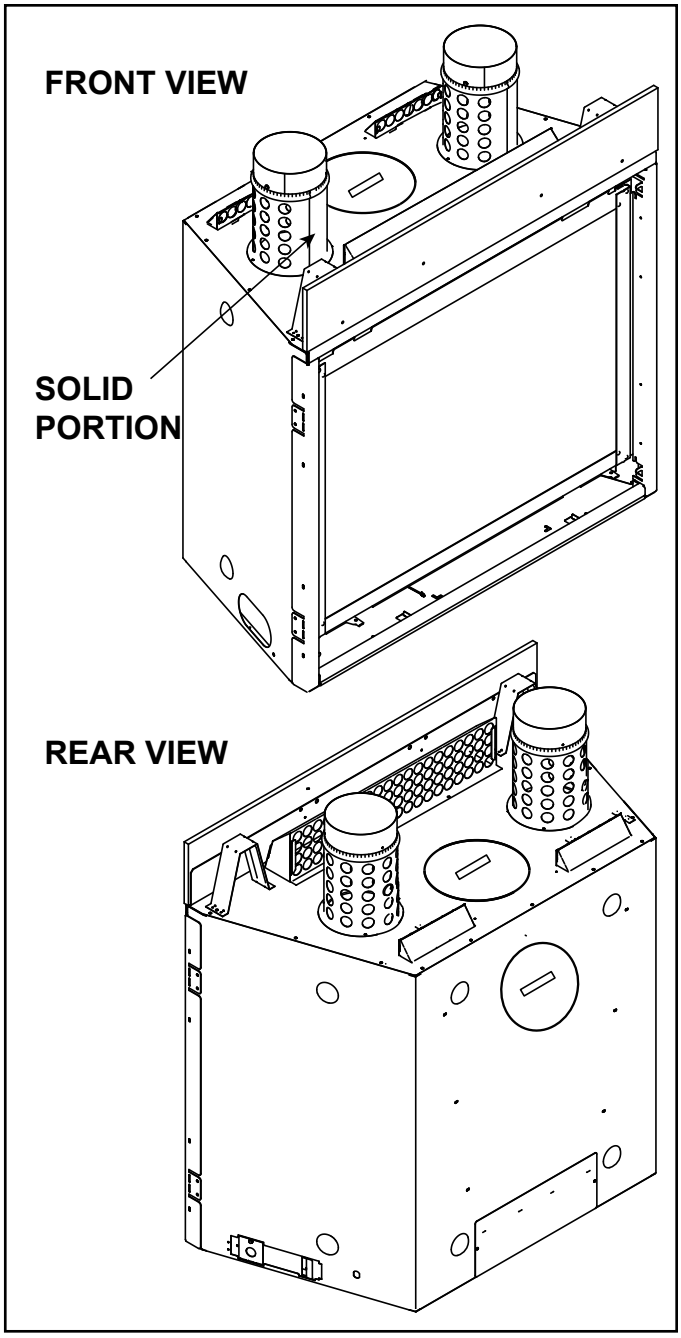

Figure 8 Adapters Installed

Passive Heat Template - Front and Side Discharge

Install the passive heat templates to prevent finishing material from being installed over passive heat discharge openings. Use two templates for front discharge and four templates for side discharge.

1. Hand bend templates as shown in Figure 9.
2. Place one template into the top left corner of the discharge opening as shown in Figure 10. Align the outside edge of the framing with the notch in the template as shown in Figure 11. Attach to framing using wood screws.
3. Place the second template into the bottom right corner and attach using the same method as in Step 2. If installing templates on framing for a side discharge kit, repeat the process for the additional two templates on the other side discharge opening.
4. Once the wall finishing material has been installed, remove the templates and discard. After the templates have been removed, the trim kit, register, or other finishing options may be installed.

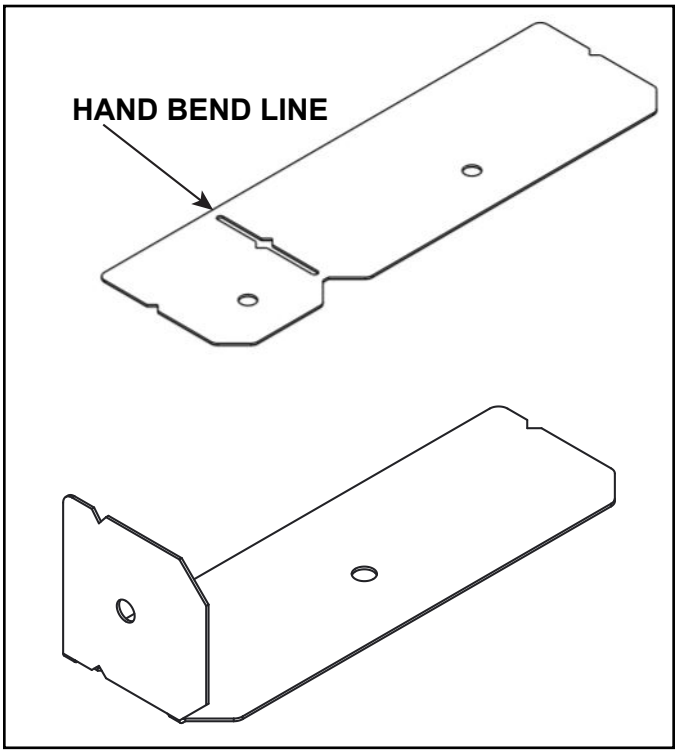

Figure 9 Hand Bending the Template

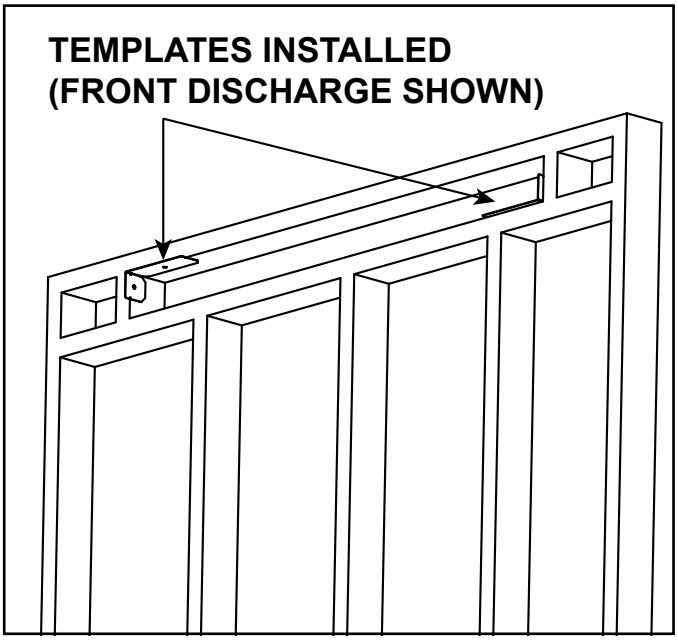

Figure 10 Template Installation

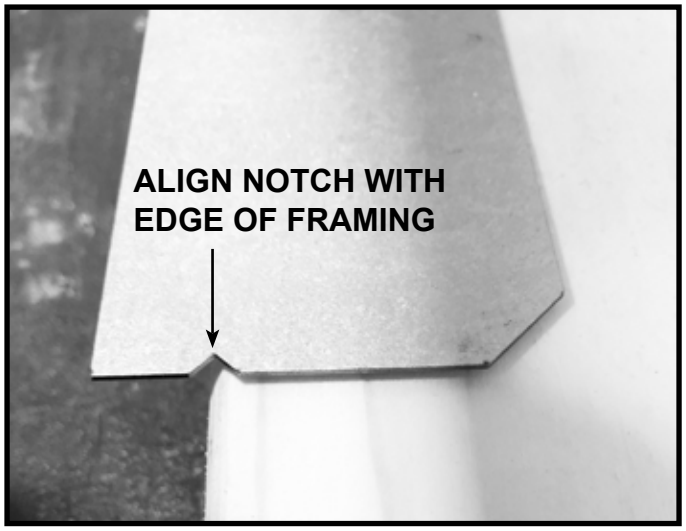

Figure 11 Template Notch Alignment

Finishing

1. Apply wall sheathing material, such as drywall up to 1/2 in. (13mm) thick up to the edge of the discharge opening.

***WARNING! Risk of Overheating! DO NOT** apply wall sheathing past the edge of discharge opening or finishing templates. Remove finishing templates before appliance operation. Overheating of appliance and combustible materials will occur.*

2. **Facing Material with Front Trim Kit (PH-FRTTRIM)**

1 Inch Thick or Less: When using Non-Combustible facing material in this thickness range, the Overlap Fit method may be used. See Figure 12. Place facing materials up to the edge of the discharge opening and install trim kit as instructed. Facing must not interfere with the air flow through the trim kit.

Greater than 1 Inch: Non-Combustible facing material in this thickness range must use the Inside Fit method. See Figure 12. Place facing materials up to ½ in. (13mm) away from the edge of the trim kit to allow for proper removal of the vent cover. Install trim kit as instructed. Consult the appliance Installation Manual to determine maximum facing material thickness.

3. **Facing Material with Side Discharge (PH-SIDETRIM)**

1 Inch Thick or Less: When using Non-Combustible facing material in this thickness range, the Overlap Fit method may be used. See Figure 12. Place facing materials up to the edge of the discharge opening and install register covers as instructed. Facing must not interfere with the air flow through the trim kit.
Greater than 1 Inch: Non-Combustible facing material in this thickness range must use the Inside Fit method. See Figure 12. Place facing materials up to the edge of the register covers. Install register covers as instructed. See Figure 14. Consult the appliance Installation Manual to determine maximum facing material thickness.

4. Install trim kit (PH-FRTTRIM or PH-SIDETRIM) as instructed.

Side Discharge: The PH-SIDETRIM kit is required to complete installation.
Front Discharge: The trim kit (PH-FRTTRIM-36 or PH-FRTTRIM-42) is an optional finishing method. Other standard finishing methods may be used as well.

5. See Figure 13 to understand details and requirements for Passive Heat finishing requirements.

Painting

Side Discharge:

If desired finishing includes a painted register cover, Hearth & Home Technologies recommends using high temperature paint with a minimum of 300 °F (149 °C) continuous exposure rating.

Front Discharge and Open Top Discharge:

The location of the Passive Heat discharge opening could allow for venting and other construction materials to be visible. It is acceptable to paint the vent pipe and other construction materials using a high temperature paint with a minimum of 300 °F (149 °C) continuous exposure rating. Hearth & Home Technologies recommends using black touch up paint (part number TUP-GBK-12) available from your Hearth & Home Technologies dealer.

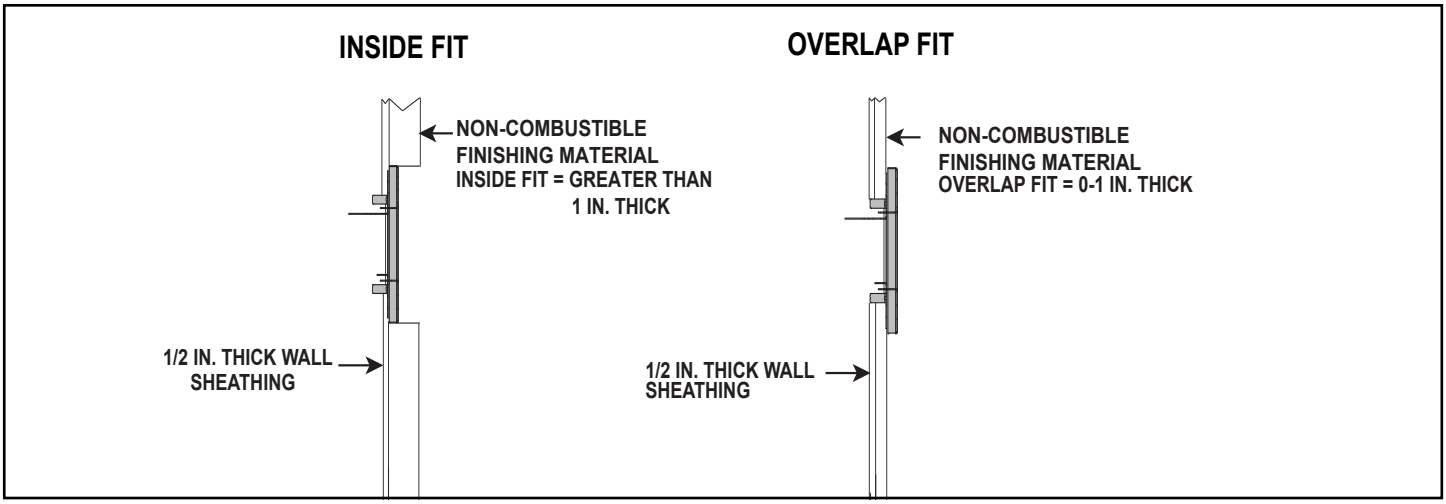

Figure 12 Inside Fit and Overlap Fit

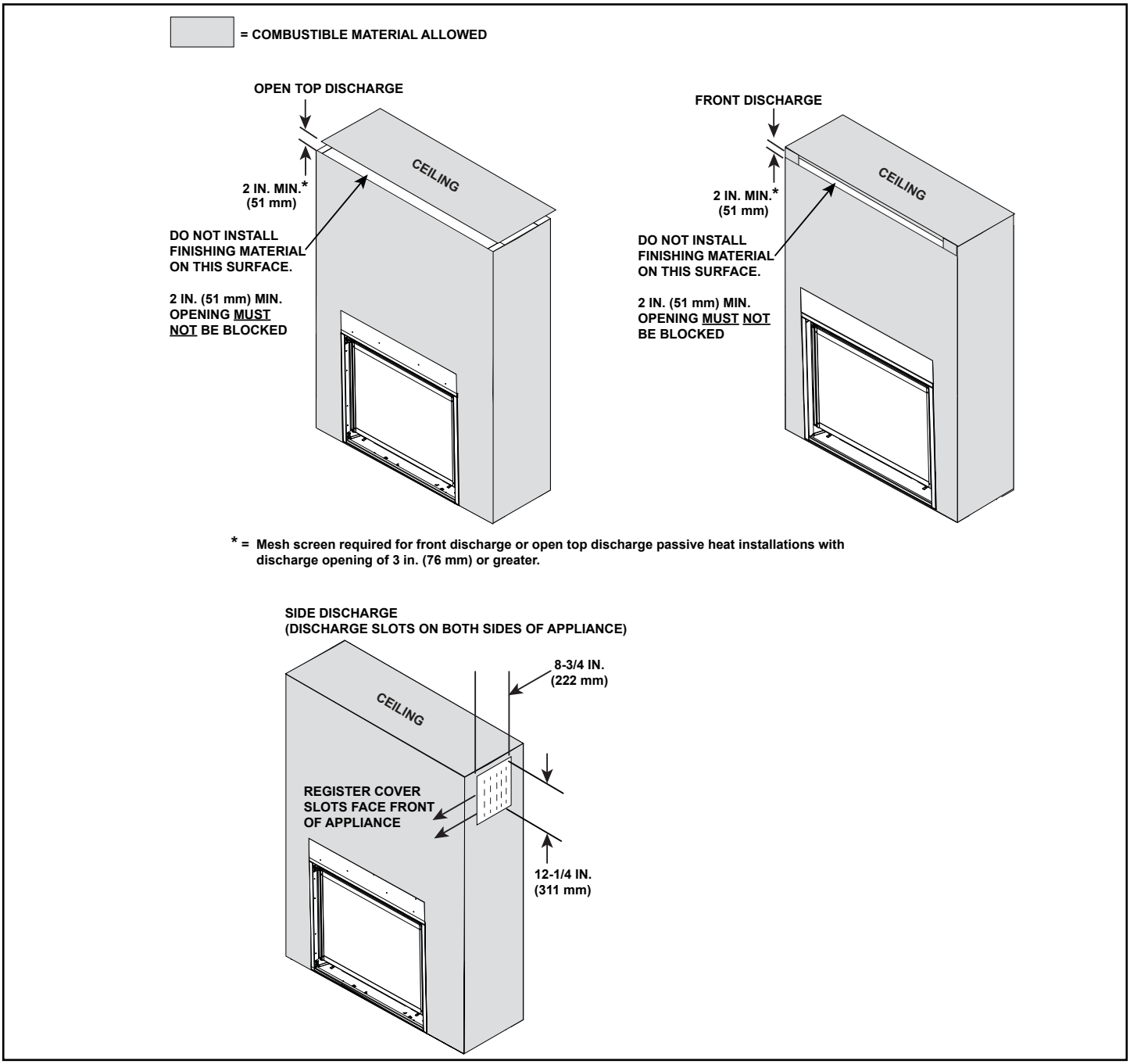

Figure 13 Finishing Material Installed

Install Register Cover - Side Discharge Only

WARNING! Risk of Overheating! *Both passive heat side discharge assemblies included with kit* ***MUST*** *be installed and operational. Overheating will occur.*

1. Install register cover with louvers facing the front of the fireplace (control side) using provided screws See Figure 14.

WARNING! Risk of Fire! *DO NOT block passive heat registers! Overheating will occur.*

LOUVERS FACING THE FRONT OF THE APPLIANCE (CONTROL SIDE)

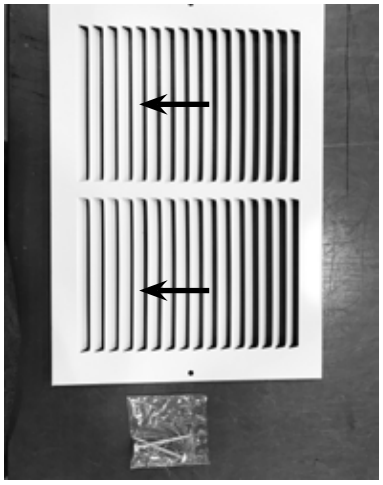

Figure 14 Correct Register Orientation

Mantel Projections

If installing a television (TV) above the appliance, see Section 2.B of the appliance Installation Manual.

NOTICE: *A mantel is required if a fan is installed. Damage to TV could occur.*

Combustible Mantels - Passive Heat Installed

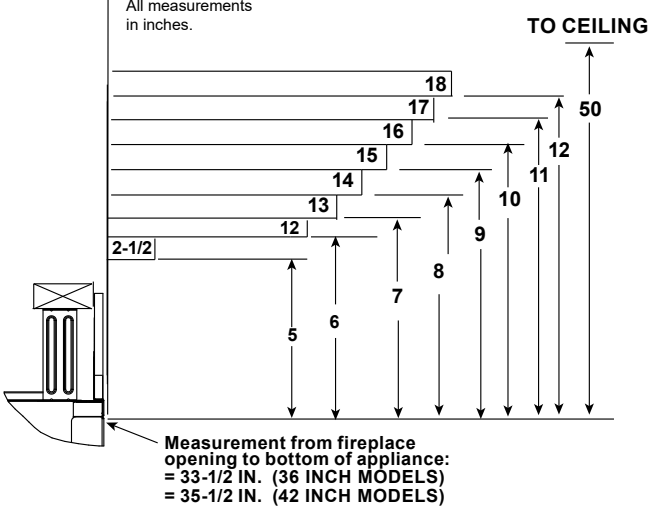

Note: Measurement is taken from top of the opening, NOT the top of the fireplace.

Figure 15 Minimum Vertical and Maximum Horizontal Dimensions of Combustibles - Passive Heat Kit Installed

Non-Combustible Mantels - Passive Heat Installed

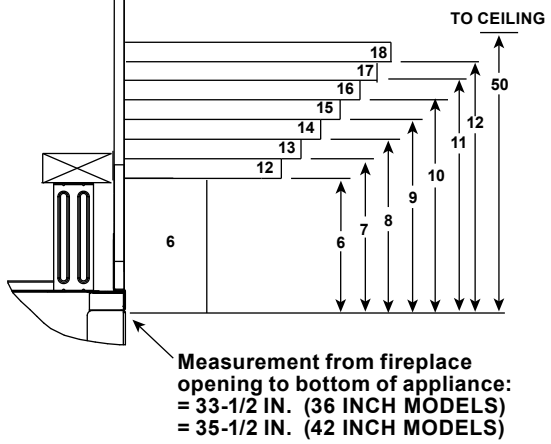

Note: Measurement is taken from top of the opening, NOT the top of the fireplace.

Figure 16 Minimum Vertical and Maximum Horizontal Dimensions of Non-Combustibles - Passive Heat Kit Installed

Installation of Passive Heat with Other Optional Heat Management Systems

There are other heat management options available for use with these models. Consult the appliance manual for compatible options.

NOTICE: *Cap must be removed from adapter prior to attaching venting for the heat management kit. Heat-Zone®-Gas and Heat-Out-Gas system will not function properly if cap remains attached.*

Passive Heat Kit Installed with Optional Heat-Zone-Gas

- Only one Heat-Zone-Gas kit may be installed and used in conjunction with the Passive Heat System. Installation of the HZMR-ADP kit is not required.

WARNING! Risk of Overheating! *DO NOT block the holes on the Passive Heat adapter. Venting MUST not extend past the rib on the Passive Heat adapter. If venting or insulation is blocking holes in the Passive Heat adapter overheating of chase could occur.*

- Remove cap from the Passive Heat adapter and discard the cap. The venting for the Heat-Zone-Gas kit will attach directly on top of the Passive heat adapter. See Figure 17.
- Refer to the instructions included with the Heat-Zone-Gas kit for more information.

Passive Heat Kit Installed with Optional Heat-Out-Gas

- One Heat-Out-Gas kit may be installed and used in conjunction with the Passive Heat Heat Management System.

WARNING! Risk of Overheating! *Be sure the venting does not does not extend past the rib on Passive Heat adapter. If venting or insulation is blocking holes in the Passive Heat adapter overheating of chase could occur.*

- Remove covers from the Passive Heat adapters and discard the covers. The venting for the Heat-Out-Gas kit will attach directly on top of the Passive heat adapter. See Figure 17.
- Refer to the instructions included with the HEAT-OUT-GAS kit for more information.

The Passive Heat Kit is compatible with a GFK-160A or GFK210-240V fan. Consult the appliance Installation Manual for mantel projection information and TV guidelines.

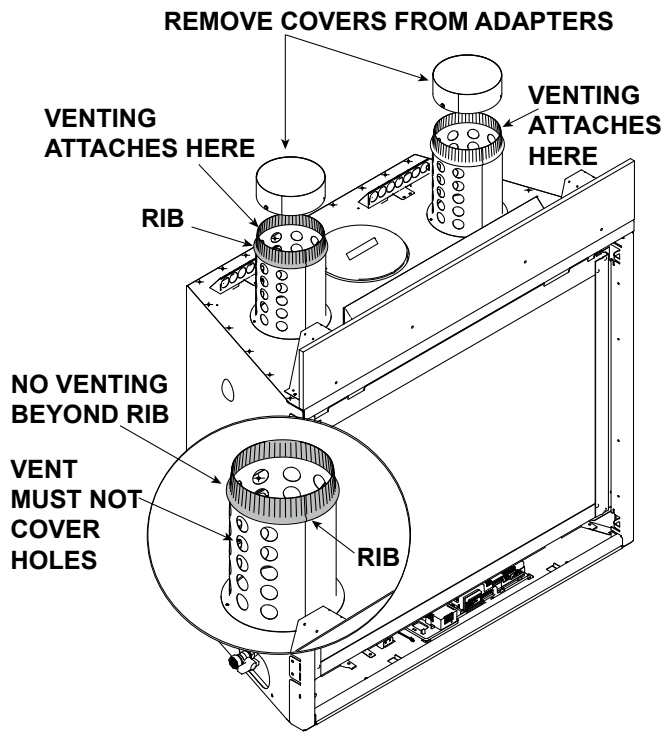

Figure 17 Adapter Prepared for Venting to be Attached

Maintenance

Service and maintain the gas fireplace per instructions. Keep the air register(s) clean and free of any blockage.

Please contact your Hearth & Home Technologies dealer with any questions or concerns.
For the location of your nearest Hearth & Home Technologies dealer,
please visit www.hearthnhome.com.

Hearth & Home Technologies
7571 215th Street West, Lakeville, MN 55044
www.hearthnhome.com