BOSCH

Register your new appliance now at MyBosch and enjoy benefits free of charge: **bosch-home.com/welcome**

MyBosch

Fridge-freezer combination

KGN33.. **KGN36..** **KGN39..**

[en] Information for Use

You can find additional information and explanations online. Scan the QR code on the title page.



Table of contents

1 Safety 3
1.1 Definition of the signal words 3
1.2 General information 4
1.3 Intended use 4
1.4 Restriction on user group 4
1.5 Safe transport 4
1.6 Safe installation 5
1.7 Safe use 6
1.8 Damaged appliance 8

2 Preventing material damage 9

3 Environmental protection and saving energy 9
3.1 Disposing of packaging 9
3.2 Saving energy 9

4 Installation and connection 10
4.1 Scope of delivery 10
4.2 Criteria for the installation location 10
4.3 Installing the appliance 10
4.4 Preparing the appliance for the first time 10
4.5 Connecting the appliance to the electricity supply 10

5 Familiarising yourself with your appliance 12
5.1 Appliance 12
5.2 Control panel 13

6 Features 13
6.1 Shelf 14
6.2 Fruit and vegetable container 14
6.3 Door tray 14
6.4 Accessories 14

7 Basic operation 14
7.1 Switching on the appliance 14
7.2 Operating tips 15
7.3 Switching off the appliance 15
7.4 Setting the temperature 15

8 Additional functions 15
8.1 Super cooling 16
8.2 Super freezing 16
8.3 Energy-saving mode 16
8.4 Rest mode 16

9 Alarm 17
9.1 Door alarm 17
9.2 Temperature alarm 17

10 Home Connect 17
10.1 Setting up Home Connect 18
10.2 Switching on the connection to the WLAN home network (Wi-Fi) 18
10.3 Intelligently networking appliances using Matter [1] 18
10.4 Switching off the connection to the WLAN home network (Wi-Fi) 18
10.5 Installing updates for the Home Connect software 19
10.6 Resetting Home Connect settings 19
10.7 Remote diagnostics 19
10.8 Data protection 19

11 Refrigerator compartment 19
11.1 Tips for storing food in the refrigerator compartment 20
11.2 Chill zones in the refrigerator compartment 20

[1] Matter is developed by Connectivity Standards Alliance™. This brand, related logos, and marks are trademarks of the Alliance, all rights reserved.

12 Cold storage compartment 20
12.1 Storage times in the cold storage compartment at 0 °C 20
13 Freezer compartment 20
13.1 Freezing capacity 21
13.2 Tips for storing food in the freezer compartment 21
13.3 Tips for freezing fresh food ... 21
13.4 Shelf life of frozen food at –18 °C 21
13.5 Defrosting methods for frozen food 22
14 Defrosting 22
14.1 Defrosting in the refrigerator compartment 22
14.2 Defrosting in the cold storage compartment 22
14.3 Defrosting in the freezer compartment 22
15 Cleaning and servicing 22
15.1 Preparing the appliance for cleaning 22
15.2 Cleaning the appliance 22
15.3 Removing the fittings 23
15.4 Removing appliance components 24
16 Troubleshooting 25
16.1 Power failure 28
17 Storage and disposal 28
17.1 Taking the appliance out of operation 28
17.2 Disposing of old appliance ... 28
18 Customer Service 29
18.1 Product number (E-Nr.), production number (FD) and consecutive numbering (Z-Nr.) 29
19 Technical data 29
19.1 Information regarding Free and Open Source Software .. 30
20 Declaration of Conformity 30
20.1 Statement of Compliance for Great Britain 31

⚠ 1 Safety

Observe the following safety instructions.

1.1 Definition of the signal words

This is where you can find explanations for the safety signal words used in this manual.

⚠ WARNING
This indicates that death or serious injuries may occur as a result of non-observance of this warning.

⚠ CAUTION
This indicates that minor or moderate injuries may occur as a result of non-observance of this warning.

ATTENTION
This indicates that damage to the appliance or other material damage may occur as a result of non-compliance with this warning.

Note: This alerts you to important information.

1.2 General information

- Read this instruction manual carefully.
- Keep the instruction manual and the product information safe for future reference or for the next owner.
- Do not connect the appliance if it has been damaged in transit.

1.3 Intended use

This appliance is not intended to be used as a built-in appliance.

Only use this appliance:
- for chilling and freezing food and for making ice cubes.
- in private households and in enclosed spaces in a domestic environment.
- Up to an altitude of 2000 m above sea level.

1.4 Restriction on user group

This appliance may be used by children aged 8 or over and by people who have reduced physical, sensory or mental abilities or inadequate experience and/or knowledge, provided that they are supervised or have been instructed on how to use the appliance safely and have understood the resulting dangers.
Do not let children play with the appliance.
Cleaning and user maintenance must not be performed by children unless they are being supervised.
Children above the age of three years old and younger than eight years old may load and unload the refrigerating appliance.

1.5 Safe transport

⚠ WARNING – Risk of injury!
The heavy weight of the appliance may result in injury when lifted.
▸ Do not lift the appliance on your own.

1.6 Safe installation

⚠ WARNING – Risk of electric shock!

Incorrect installation is dangerous.

- ▸ Connect and operate the appliance only in accordance with the specifications on the rating plate.
- ▸ Connect the appliance to a power supply with alternating current only via a properly installed socket with earthing.
- ▸ The protective conductor system of the domestic electrical installation must be properly installed.
- ▸ Never equip the appliance with an external switching device, e.g. a timer or remote control.
- ▸ When the appliance is installed, the mains plug of the power cord must be freely accessible. If free access is not possible, an isolating switch must be integrated into the permanent electrical installation according to the installation regulations.
- ▸ When installing the appliance, check that the power cable is not trapped or damaged.

If the insulation of the power cord is damaged, this is dangerous.

- ▸ Never let the power cord come into contact with heat sources.

⚠ WARNING – Risk of explosion!

If the appliance's ventilation openings are closed off, a leak in the refrigeration circuit may result in a flammable mixture of gas and air.

- ▸ Keep ventilation openings in the appliance casing or in the integrated casing clear of obstruction.

⚠ WARNING – Risk of fire!

It is dangerous to use an extended power cord and non-approved adapters.

- ▸ Do not use extension cables or multiple socket strips.
- ▸ Only use adapters and power cords approved by the manufacturer.
- ▸ If the power cord is too short and a longer one is not available, please contact an electrician to have the domestic installation adapted.

Portable multiple socket strips or portable power supply units may overheat and cause a fire.

- ▸ Do not place portable multiple socket strips or power supply units on the back of the appliance.

1.7 Safe use

⚠ WARNING – Risk of electric shock!

An ingress of moisture can cause an electric shock.

- ▸ Only use the appliance in enclosed spaces.
- ▸ Never expose the appliance to intense heat or humidity.
- ▸ Do not use steam- or high-pressure cleaners to clean the appliance.

⚠ WARNING – Risk of suffocation!

Children may put packaging material over their heads or wrap themselves up in it and suffocate.

- ▸ Keep packaging material away from children.
- ▸ Do not allow children to play with packaging material.

Children may breathe in or swallow small parts, causing them to suffocate.

- ▸ Keep small parts away from children.
- ▸ Do not let children play with small parts.

⚠ WARNING – Risk of explosion!

If the cooling circuit is damaged, flammable refrigerant may escape and explode.

- ▸ To accelerate the defrosting process, do not use any other mechanical devices or means other than those recommended by the manufacturer.
- ▸ If food is stuck to the freezer compartment, loosen it with a blunt object such as the handle of a wooden spoon.

Products which contain flammable propellants and explosive substances may explode, e.g. spray cans.

- ▸ Do not store products which contain flammable propellants (e.g. spray cans) or explosive substances in the appliance.

⚠ WARNING – Risk of fire!

Electrical devices within the appliance may cause a fire, e.g. heaters or electric ice makers.

- ▸ Do not operate electrical devices within the appliance.

⚠ WARNING – Risk of injury!
Containers that contain carbonated drinks may burst.
- ▸ Do not store containers that contain carbonated drinks in the cold storage compartment.
- ▸ Do not store containers that contain carbonated drinks in the freezer compartment.

Injury to the eyes caused by escaping flammable refrigerant and hazardous gases.
- ▸ Do not damage the tubes of the refrigerant circuit or the insulation.

The appliance may tip.
- ▸ Do not stand or support yourself on the base, runners or doors.

⚠ WARNING – Risk of burns!
Individual parts on the back of the appliance become hot during operation.
- ▸ Never touch these hot parts.

⚠ WARNING – Risk of cold burns!
Contact with frozen food and cold surfaces may cause burns by refrigeration.
- ▸ Never put frozen food straight from the freezer compartment into your mouth.
- ▸ Avoid prolonged contact of the skin with frozen food, ice and surfaces in the freezer compartment.

⚠ CAUTION – Risk of harm to health!
To prevent food from being contaminated, you must observe the following instructions.
- ▸ If the door is open for an extended period of time, this may lead to a considerable temperature increase in the compartments of the appliance.
- ▸ Regularly clean the surfaces that may come into contact with food and accessible drain systems.
- ▸ Store raw meat and fish in suitable containers in the refrigerating appliance so that they do not touch or drip on other food.
- ▸ If the fridge/freezer is empty for an extended period of time, switch off the appliance, defrost it, clean it and leave the door open to prevent the formation of mould.

Metal or metal-style parts in the appliance may contain aluminium. If acidic food comes into contact with aluminium in the appliance, aluminium foil ions may pass into the food.

- ▸ Do not consume soiled food.

1.8 Damaged appliance

⚠ WARNING – Risk of electric shock!

If the appliance or the power cord is damaged, this is dangerous.

- ▸ Never operate a damaged appliance.
- ▸ Never pull on the power cord to unplug the appliance. Always unplug the appliance at the mains.
- ▸ If the appliance or the power cord is damaged, immediately unplug the power cord or switch off the fuse in the fuse box.
- ▸ Call customer service. →*Page 29*

Improper repairs are dangerous.

- ▸ Repairs to the appliance should only be carried out by trained specialist staff.
- ▸ Only use genuine spare parts when repairing the appliance.
- ▸ If the power cord or the appliance power cable of this appliance is damaged, it must be replaced with a special power cord or special appliance power cable, which is available from the manufacturer or its Customer Service.

⚠ WARNING – Risk of fire!



If the tubes are damaged, flammable refrigerant and harmful gases may escape and ignite.

- ▸ Keep naked flames and ignition sources away from the appliance.
- ▸ Ventilate the room.
- ▸ Switch off the appliance. →*Page 15*
- ▸ Unplug the mains plug from the mains or switch off the circuit breaker in the fuse box.
- ▸ Call customer service. →*Page 29*

2 Preventing material damage

ATTENTION
If not rolling freely, the appliance's castors may damage the floor when the appliance is moved.

- ▸ Transport the appliance using a sack truck.
- ▸ Use floor protection when moving the appliance, and do not move it in a zigzag fashion.

Using the appliance, base, runners or doors as a seat or climbing surface may damage the appliance.

- ▸ Do not stand or lean on the appliance, base, runners or doors.

Contamination with oil or fat may cause plastic parts and door seals to become porous.

- ▸ Keep plastic parts and door seals free of oil and grease.

Metal or metal-style parts in the appliance may contain aluminium. When aluminium comes into contact with acidic foods, it corrodes and discolours.

- ▸ Only store packaged food in the appliance.

If you clean fittings and accessories in the dishwasher, this may cause them to become deformed or discolour.

- ▸ Never clean fittings and accessory in the dishwasher.

3 Environmental protection and saving energy

3.1 Disposing of packaging

The packaging materials are environmentally compatible and can be recycled.

- ▸ Sort the individual components by type and dispose of them separately.

3.2 Saving energy

If you follow these instructions, your appliance will use less power.

Selecting the installation location

- Keep the appliance out of direct sunlight.
- Install the appliance as far away as possible from heating elements, cookers and other heat sources:
  - Maintain a 30 mm clearance to electric or gas cookers.
  - Maintain a 300 mm clearance to oil or solid-fuel cookers.
- Make sure there is a small gap between the side wall and the appliance.
- Ensure a clearance of 50 mm from the rear wall.
- Never cover or block the external ventilation openings.

Saving energy during use

Note: The arrangement of the fittings does not affect the energy consumption of the appliance.

- Open the appliance only briefly and then close it carefully.
- Never cover or block the interior ventilation openings or the exterior ventilation openings.
- Transport purchased food in a cool bag and place in the appliance quickly.
- Allow warm food and drinks to cool down before storing them.
- Thaw frozen food in the refrigerator compartment to utilise the low temperature of the food.
- Always leave some space between the food and to the back panel.

4 Installation and connection

4.1 Scope of delivery

After unpacking all parts, check for any transport damage and for completeness of delivery.
If you have any complaints, contact your dealer or our after-sales service →*Page 29*.

The delivery consists of the following:
- Free-standing appliance
- Equipment and accessories [1]
- Installation instructions
- User manual
- Customer service directory
- Warranty enclosure [2]
- Energy label
- Information on energy consumption and noises
- Information about Home Connect

4.2 Criteria for the installation location

⚠ WARNING
Risk of explosion!
If the appliance is in a space that is too small, a leak in the refrigeration circuit may result in a flammable mixture of gas and air.
- ▸ Only install the appliance in a space with a volume of at least 1 m^3 per 8 g refrigerant. The volume of refrigerant is indicated on the rating plate.
  → *"Appliance", Fig.* **1**/4 *Page 12*

The weight of the appliance ex works may be up to 75 kg depending on the model.

The subfloor must be sufficiently stable to bear the weight of the appliance.
The surface must be level.
This refrigerator is intended for use at ambient temperatures of 10 °C to 43 °C.
The appliance is fully functional within the permitted ambient temperature.
If you operate the appliance in colder ambient temperatures, damage to the appliance can be ruled out up to an ambient temperature of 5 °C.

4.3 Installing the appliance

- ▸ Install the appliance in accordance with the enclosed installation instructions.

4.4 Preparing the appliance for the first time

1. Remove the informative material.
2. Remove the protective foil and transit bolts, e.g. remove the adhesive strips and carton.
3. Clean the appliance for the first time. →*Page 22*

4.5 Connecting the appliance to the electricity supply

Requirement: After transporting the appliance in a horizontal position and installing it, wait at least one hour before connecting it to the mains.
1. Insert the appliance plug of the power cord into the appliance.

[1] Depending on the appliance specifications
[2] Not in all countries

2. Insert the mains plug of the appliance's power cable in a socket nearby.
   The connection data of the appliance can be found on the rating plate.
   → *"Appliance", Fig.* **1** / 4 *Page 12*

3. Check the mains plug is inserted properly.

✔ The temperature display shows an animation and the control panel is locked.

✔ The appliance is ready to use once the animation has ended and the temperature display lights up.

5 Familiarising yourself with your appliance

5.1 Appliance

You can find an overview of the parts of your appliance here.

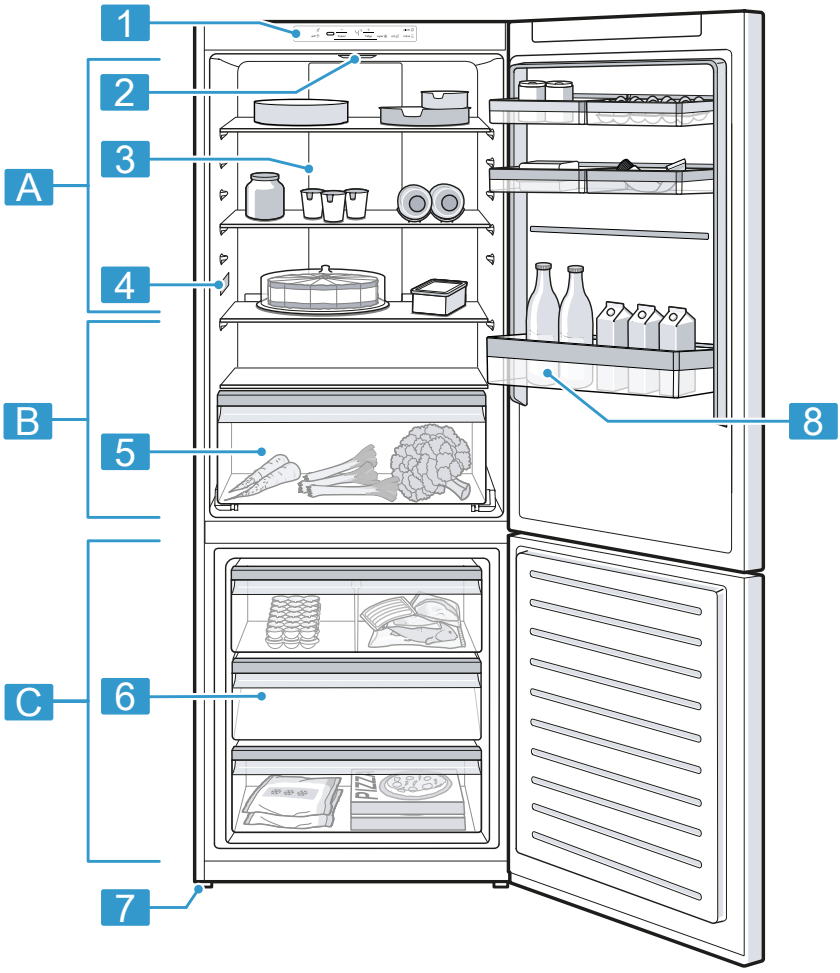

1

A	Refrigerator compartment →*Page 19*
B	Cold storage compartment →*Page 20*
C	Freezer compartment →*Page 20*

1	Control panel →*Page 13*
2	Lighting
3	Inner ventilation openings
4	Rating plate →*Page 29*

5	Fruit and vegetable container → *Page 14*
6	Frozen food container → *Page 24*
7	Screw foot
8	Door tray for large bottles → *Page 14*

Note: Deviations between your appliance and the diagrams may differ with regard to their features and size.

5.2 Control panel

You can use the control panel to configure all functions of your appliance and to obtain information about the operating status.

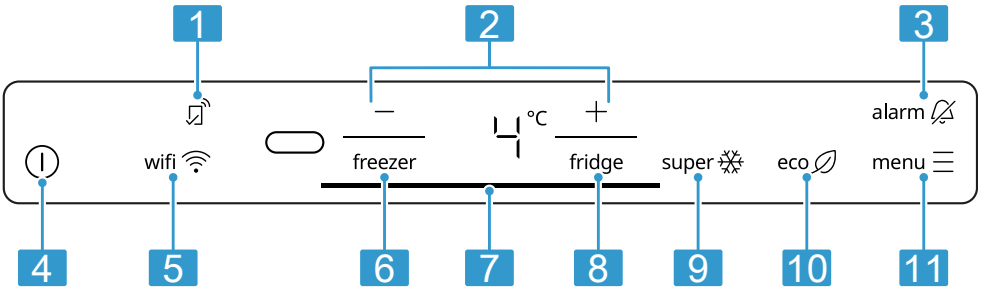

2

1	lights up if user-defined settings have been set via the Home Connect app. You can find more information in the Home Connect app.
2	−/+ sets the temperature.
3	alarm switches the warning signal off.
4	① switches the appliance on or off.
5	wifi switches the connection to the WLAN home network (Wi-Fi) on or off.
6	freezer allows the freezer compartment to be set.
7	The light bar provides visual feedback.
8	fridge allows the refrigerator compartment to be set.
9	super switches the Super function on or off.
10	eco switches energy-saving mode on or off.
11	menu activates and deactivates setting mode.

6 Features

The features of your appliance depend on the model.

6.1 Shelf

To vary the shelf as required, you can remove the shelf and re-insert it elsewhere.
→ *"Removing the shelf", Page 23*

6.2 Fruit and vegetable container

Store fresh fruit and vegetables in their packaging in the fruit and vegetable container.
Cover any chopped fruit and vegetables, or store in air-tight packaging. Condensation may form in the fruit and vegetable container depending on the food and quantity stored. Remove the condensation with a dry cloth.
To ensure that the quality and aroma are retained, store fruit and vegetables that are sensitive to cold outside of the appliance at temperatures of approx. 8 °C to 12 °C, e.g. pineapple, bananas, citrus fruits, cucumbers, courgettes, peppers, tomatoes and potatoes.

6.3 Door tray

To adjust the door tray as required, you can move or remove the door tray and re-insert elsewhere.
→ *"Removing door tray", Page 23*

Tips

- If moving it when it is fully loaded, lift the door tray slightly.
- To organise food, place the door tray in the mounting groove in the holder.

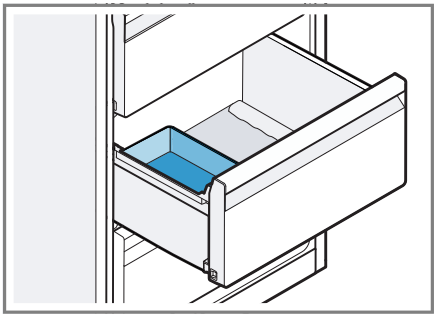

6.4 Accessories

Use original accessories. These have been made especially for your appliance.
The accessories for your appliance depend on the model.

Ice cube tray

Use the ice cube tray to make ice cubes.

Making ice cubes

Use only drinking water to make ice cubes.

1. Fill the ice cube tray with drinking water up to ¾ and place in the freezer compartment.
   If the ice cube tray is stuck to the freezer compartment, loosen it with a blunt object such as the handle of a wooden spoon.
2. To loosen the ice cubes, twist the ice cube tray slightly or hold it briefly under flowing water.

7 Basic operation

7.1 Switching on the appliance

1. Electrically connect the appliance.
   → *Page 10*

Note: If the appliance has been previously switched off using the control panel, press and hold ⏻ for three seconds.

- ✔ The temperature display shows an animation and the control panel is locked.
- ✔ The appliance is ready to use once the animation has ended and the temperature display lights up.
- ✔ The appliance begins to cool.
- ✔ A warning signal sounds and **alarm** 🔕 lights up because the freezer compartment is still too warm.

2. Switch off the warning tone using **alarm** 🔕.

- ✔ **alarm** 🔕 goes out as soon as the set temperature has been reached.

3. Set the required temperature. →*Page 15*

7.2 Operating tips

- Once you have switched on the appliance, the set temperature is only reached after several hours. Do not put any food in the appliance until the set temperature has been reached.
- The front panels of the housing are temporarily heated slightly. This prevents condensation in the area of the door seal.
- When closing the door, make sure that the door is not blocked by stored items.
- When you close the door, a vacuum may be created. The door is then difficult to open again. Wait a moment until the vacuum is offset.
- The temperature in the appliance varies due to the following conditions:
  - How often the appliance is opened
  - Load capacity
  - Temperature of newly stored food
  - Ambient temperature
  - Direct sunlight

7.3 Switching off the appliance

1. Press **menu** ☰ to activate setting mode.
2. Press and hold ⏻ for 3 seconds.

7.4 Setting the temperature

Setting the refrigerator compartment temperature

1. Press **menu** ☰ to activate setting mode.
2. Select the refrigerator compartment using **fridge**.
3. Press −/+ repeatedly until the temperature display shows the required temperature setting.
   The recommended temperature in the refrigerator compartment is 4 °C.

Setting the freezer compartment temperature

1. Press **menu** ☰ to activate setting mode.
2. Select the freezer compartment with **freezer**.
3. Press −/+ repeatedly until the temperature display shows the required temperature setting.
   The recommended temperature in the freezer compartment is −18 °C.

8 Additional functions

Find out which additional functions can be used for your appliance.

8.1 Super cooling

With Super cooling, the refrigerator compartment cools as cold as possible.
Switch on Super cooling before placing large quantities of food in the refrigerator compartment.

Note: When Super cooling is switched on, increased noise may occur.

Switching on Super cooling

1. Press **menu** ☰ to activate setting mode.
2. Select the refrigerator compartment using **fridge**.
3. Press **super** ❄.

✔ **super** ❄ lights up and the light bar lights up blue below the refrigerator compartment selection.

Note: After approx. 6 hours, the appliance switches to normal operation.

Switching off Super cooling

1. Select the refrigerator compartment using **fridge**.
2. Press **super** ❄.

✔ The previously set temperature is displayed.

8.2 Super freezing

With Super freezing, the freezer compartment cools as cold as possible.
Switch on Super freezing before placing a larger quantity of food in the appliance.
In order to utilise the freezer capacity, use Super freezing.

Note: When Super freezing is switched on, increased noise may occur.

Switching on Super freezing

1. Press **menu** ☰ to activate setting mode.
2. Select the freezer compartment with **freezer**.
3. Press **super** ❄.

✔ **super** ❄ lights up and the light bar lights up blue below the freezer compartment selection.

Note: After approx. 54 hours, the appliance switches to normal operation.

Switching off Super freezing

1. Select the freezer compartment with **freezer**.
2. Press **super** ❄.

✔ The previously set temperature is displayed.

8.3 Energy-saving mode

You can set the appliance to save energy with the energy-saving mode. The appliance automatically sets the temperatures.

Refrigerator compartment	6 °C
Cold storage compartment	0 °C
Freezer compartment	–18 °C

Switching on energy-saving mode

1. Press **menu** ☰ to activate setting mode.
2. Press **eco** ∅.

✔ **eco** ∅ lights up and the light bar lights up green below the compartment selection.

Switching off energy-saving mode

▸ Press **eco** ∅.

✔ The previously set temperature is displayed.

8.4 Rest mode

The rest mode switches off all non-essential functions.

During rest mode, the following functions are switched off:
- Super cooling
- Super freezing
- Alarm
- Interior lighting
- Signal tones
- Messages on the control panel

Note: The control panel lighting is switched off during rest mode. **eco** lights up.

Switching on rest mode

1. Press **menu** to activate setting mode.
2. Press and hold **eco** for 6 seconds until the display goes out.

✔ **eco** lights up.

Note: After approx. 74 hours, the appliance switches to normal mode.

Switching off rest mode

▸ Press and hold **eco** for 6 seconds.

9 Alarm

9.1 Door alarm

If the appliance door is open for a while, the door alarm switches on. A signal tone sounds, **alarm** and the light bar flash red below the affected compartment.

Switching off the door alarm

▸ Close the appliance door or press **alarm**.

✔ The warning tone is switched off.

9.2 Temperature alarm

If the freezer compartment becomes too warm, the temperature alarm is switched on.

A signal tone sounds, **alarm** and the light bar below the freezer compartment selection flash red.

⚠ CAUTION
Risk of harm to health!
During the thawing process, bacteria may multiply and spoil the frozen food.
- ▸ Do not refreeze food after it has been defrosted or started to defrost.
- ▸ Refreeze food only after cooking.
- ▸ These items should no longer be stored for the maximum storage period.

The temperature alarm can be switched on in the following cases:
- The appliance is switched on.
  Do not store any food until the appliance has reached the set temperature.
- Large quantities of fresh food are being placed inside.
  Switch on Super freezing before placing large quantities of food in the appliance.
- The freezer compartment door is open for too long.
  Check whether the frozen food has defrosted or thawed.

Switching off the temperature alarm

▸ Press **alarm**.

✔ The warning tone is switched off.

10 Home Connect

This appliance is network-capable. Connect your appliance to a mobile device to control its functions via the Home Connect app.
The Home Connect services are not available in every country. The availability of the Home Connect function

depends on the availability of the Home Connect services in your country. You can find information about this at: *www.home-connect.com*.
To be able to use Home Connect, you must first set up the connection to the WLAN home network (Wi-Fi [1]) and to the Home Connect app.
After switching on the appliance, wait at least 3 minutes until internal device initialisation is complete. Only then should you set up Home Connect.
The Home Connect app guides you through the entire login process. Follow the instructions, noting the information in the Home Connect app.

Notes

- Please note the safety precautions in this instruction manual and make sure that they are also observed when operating the appliance via the Home Connect app. → *"Safety", Page 3*
- Operating the appliance on the appliance itself always takes priority. During this time it is not possible to operate the appliance using the Home Connect app.

10.1 Setting up Home Connect

Requirement: The appliance is receiving signals from the WLAN home network (Wi-Fi) at its installation location.

1. Scan the following QR code.

   You can install the Home Connect app and connect your appliance via the QR code.
2. Follow the instructions in the Home Connect app.

10.2 Switching on the connection to the WLAN home network (Wi-Fi)

1. Press **menu** ☰ to activate setting mode.
2. Press **wifi** .

10.3 Intelligently networking appliances using Matter [2]

The universal Matter standard makes it possible to network smart appliances from different manufacturers. You can network smart appliances using a voice assistant or other central control units, for example.

Note: Not all appliances support the Matter standard. Check in the Home Connect app whether your appliance supports the Matter standard.

Requirements

- The appliance is connected to the Wi-Fi home network and the Home Connect app.
- An app that supports the Matter standard for home appliances has been installed on your mobile device.

▸ Follow the instructions in the Home Connect app to add your appliance to your Matter network.

10.4 Switching off the connection to the WLAN home network (Wi-Fi)

▸ Press **wifi** .

[1] Wi-Fi is a registered trademark of the Wi-Fi Alliance.
[2] Matter is developed by Connectivity Standards Alliance™. This brand, related logos, and marks are trademarks of the Alliance, all rights reserved.

10.5 Installing updates for the Home Connect software

Note: If an update of the Home Connect software is available, a message appears in the Home Connect app. You can find the current software version in the Home Connect app under the appliance information for the appliance.

- ▸ To install the update for the Home Connect software, follow the instructions in the Home Connect app.
- ✔ The control panel is partially locked during the installation.

10.6 Resetting Home Connect settings

If your appliance experiences connection problems with the WLAN home network (Wi-Fi) or your appliance wants to log into a different WLAN home network (Wi-Fi), you can reset the Home Connect settings.

- ▸ Press and hold **wifi** for 7 to 10 seconds until a third audible signal sounds.
- ✔ The Home Connect settings have been reset.

10.7 Remote diagnostics

Customer Service can use Remote Diagnostics to access your appliance if you contact them, have your appliance connected to the Home Connect server and if Remote Diagnostics is available in the country in which you are using the appliance.

Tip: For further information and details about the availability of Remote Diagnostics in your country, please visit the service/support section of your local website: *www.home-connect.com*.

10.8 Data protection

Please see the information on data protection.

The first time your appliance is registered on a home network connected to the Internet, your appliance will transmit the following types of data to the Home Connect server (initial registration):

- Unique appliance identification (consisting of appliance codes as well as the MAC address of the installed Wi-Fi communication module).
- Security certificate of the Wi-Fi communication module (to ensure a secure data connection).
- The current software and hardware version of your appliance.
- Status of any previous resetting to factory settings.

This initial registration prepares the Home Connect functions for use and is only required when you want to use the Home Connect functions for the first time.

Note: Please note that the Home Connect functions can only be utilised with the Home Connect app. Information on data protection can be retrieved in the Home Connect app.

11 Refrigerator compartment

You can keep dairy products, eggs, prepared meals, pastries, open preserves and hard cheese in the refrigerator compartment.
The temperature can be set from 2 °C to 8 °C.
The refrigerator compartment can also be used to store highly perishable foods in the short to medium

term. The lower the selected temperature, the longer the food remains fresh.

11.1 Tips for storing food in the refrigerator compartment

- Only store food when fresh and undamaged.
- Store food covered or in air-tight packaging.
- To avoid impeding the circulation of air and to prevent food from freezing, do not place food in front of the inner ventilation openings or in direct contact with the back wall.
- Allow hot food and drinks to cool down first before placing in the appliance.
- Observe the best-before date or use-by date specified by the manufacturer.

11.2 Chill zones in the refrigerator compartment

The air circulation in the refrigerator compartment creates different chill zones.

Coldest zone

The coldest zone is between the shelf above the vegetable container and the shelf above that, and in front of the inner ventilation openings.

Tip: Store highly perishable food such as fish, sausages and meat in the coldest zone.

Warmest zone

The warmest zone is at the very top of the door.

Tip: Store food that does not spoil easily in the warmest zone, e.g. hard cheese and butter. Cheese can then continue to release its aroma and the butter will still be easy to spread.

12 Cold storage compartment

In the cold storage compartment, you can keep food fresh for longer than in the refrigerator compartment.
The temperature in the cold storage compartment is kept at around 0 °C. The low temperature in the cold storage container ensures ideal storage conditions for perishable foods.

12.1 Storage times in the cold storage compartment at 0 °C

The storage times are dependent on the original quality of your food.

Food	Storage time
Fresh fish, seafood	up to 3 days
Poultry, meat (boiled/fried)	up to 5 days
Beef, pork, lamb, sausage (cold meat)	up to 7 days
Smoked fish	up to 14 days
Soft cheese, yoghurt, quark, buttermilk	up to 30 days

13 Freezer compartment

You can store frozen food, freeze food and make ice cubes in the freezer compartment.
The temperature in the freezer compartment depends on the temperature in the refrigerator compartment.

Long-term storage of food should be at –18 °C or lower.
The freezer compartment can be used to store perishable food long-term. The low temperatures slow down or stop the spoilage.

13.1 Freezing capacity

The freezing capacity indicates the quantity of food that can be frozen right through to the centre within a specific period of time.
Information on freezing capacity can be found on the rating plate.
→ *"Appliance", Fig.* **1** / 4 *Page 12*

Note: Approx. 24 hours before storing fresh food in the appliance, switch on Super freezing.
→ *"Switching on Super freezing", Page 16*

13.2 Tips for storing food in the freezer compartment

- Store food in air-tight packaging.
- Do not bring food which is to be frozen into contact with frozen food.
- Place the food over the whole area of the frozen food containers.
- To ensure that the air can circulate freely in the appliance, push the frozen food containers in as far as they will go.

13.3 Tips for freezing fresh food

- Freeze fresh and undamaged food only.
- Freeze food in portions.
- Cooked food is more suitable than food that can be eaten raw.
- Vegetables: Wash, chop up and blanch before freezing.
- Fruit: Wash, pit and perhaps peel, possibly add sugar or ascorbic acid solution.
- Food that is suitable for freezing includes baked items, fish and seafood, meat, game, poultry, eggs without shells, cheese, butter and quark, ready meals and leftovers.
- Food that is unsuitable for freezing includes lettuce, radishes, eggs in shells, grapes, raw apples and pears, yoghurt, sour cream, crème fraîche and mayonnaise.

Packing frozen food

If you select suitable packaging material and the correct type of packaging, you can determine the product quality and prevent freezer burn.

1. Place the food in the packaging.
2. Squeeze out the air.
3. Pack food airtight to prevent it from losing flavour and drying out.
4. Label the packaging with the contents and the date of freezing.

13.4 Shelf life of frozen food at –18 °C

Food	Storage time
Fish, sausages, prepared meals and baked goods	up to 6 months
Poultry, meat	up to 8 months
Vegetables, fruit	up to 12 months

The imprinted freezer calendar indicates the maximum storage duration in months at a constant temperature of –18 °C.

13.5 Defrosting methods for frozen food

⚠ **CAUTION**
Risk of harm to health!
During the thawing process, bacteria may multiply and spoil the frozen food.
- ▸ Do not refreeze food after it has been defrosted or started to defrost.
- ▸ Refreeze food only after cooking.
- ▸ These items should no longer be stored for the maximum storage period.

- Defrost animal-based food, such as fish, meat, cheese, quark, in the refrigerator compartment.
- Defrost bread at the ambient temperature.
- Prepare food for immediate consumption in the microwave, in the oven, or on the hob.

14 Defrosting

14.1 Defrosting in the refrigerator compartment

The refrigerator compartment in your appliance defrosts automatically.

14.2 Defrosting in the cold storage compartment

The cold storage compartment in your appliance defrosts automatically.

14.3 Defrosting in the freezer compartment

The fully automatic NoFrost system ensures that the freezer compartment remains frost-free. Defrosting is not required.

15 Cleaning and servicing

Customer Service must clean inaccessible points. Cleaning by customer service can give rise to costs.

15.1 Preparing the appliance for cleaning

1. Switch off the appliance.
   →*Page 15*
2. Disconnect the appliance from the power supply.
   Unplug the appliance from the mains or switch off the circuit breaker in the fuse box.
3. Take out all of the food and store it in a cool place.
   Place ice packs (if available) onto the food.
4. Remove all fittings and accessories from the appliance.
   →*Page 23*

15.2 Cleaning the appliance

⚠ **WARNING**
Risk of electric shock!
An ingress of moisture can cause an electric shock.
- ▸ Do not use steam- or high-pressure cleaners to clean the appliance.
- ▸ Do not use the appliance with damp hands.

Liquid in the lighting or in the controls can be dangerous.
- ▸ The rinsing water must not drip into the lighting or controls.

ATTENTION
Unsuitable cleaning products may damage the surfaces of the appliance.
- ▸ Do not use hard scouring pads or cleaning sponges.

- Do not use harsh or abrasive detergents.
- Do not use cleaning products with a high alcohol content.

Sharp or pointed objects damage the door tray rail.

- Never clean the door tray rail with sharp or pointed objects, e.g. a knife.

If you clean fittings and accessories in the dishwasher, this may cause them to become deformed or discolour.

- Never clean fittings and accessory in the dishwasher.

1. Prepare the appliance for cleaning. →*Page 22*
2. Clean the appliance, the fittings, the accessories and the door seals with a dish cloth, lukewarm water and a little pH-neutral washing-up liquid.
3. Dry thoroughly with a soft, dry cloth.
4. Insert the fittings and install the removable appliance parts.
5. Electrically connect the appliance. →*Page 10*
6. Putting the food into the appliance.

15.3 Removing the fittings

If you want to clean the fittings thoroughly, remove these from your appliance.

Removing the shelf

- Lift the shelf at the front ①, pull it out and remove it ②.

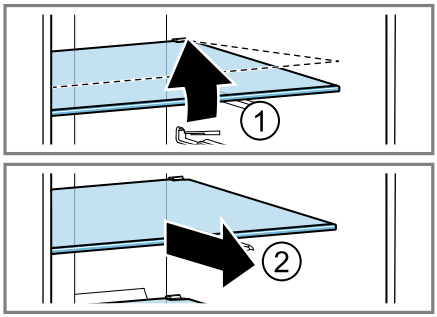

Removing door tray

- Lift the door tray at the front ① and remove it ②.

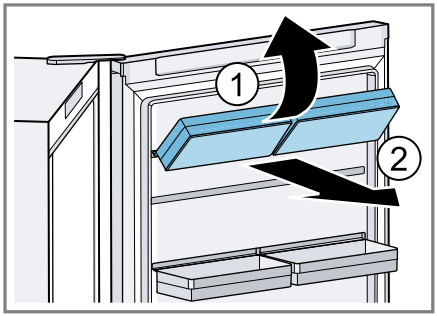

Removing the fruit and vegetable container

1. Pull out the fruit and vegetable container as far as it will go.

2. Lift the fruit and vegetable container at the front ① and remove it ②.

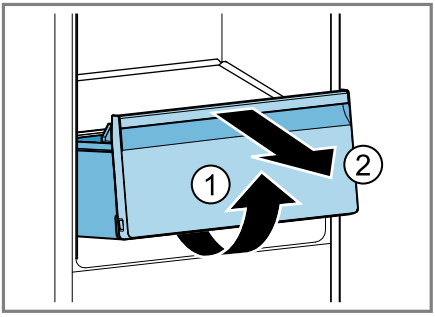

Removing the frozen food container

1. Take out the frozen food container as far as it will go.
2. Lift the frozen food container at the front ① and remove it ②.

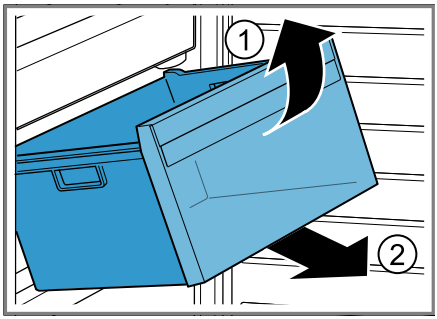

15.4 Removing appliance components

If you want to clean your appliance thoroughly, you can remove certain components from your appliance.

Removing the shelf above the fruit and vegetable container

1. Remove the fruit and vegetable container. →*Page 23*
2. Lift the shelf above the fruit and vegetable container and move the fruit and vegetable container cover slightly forwards.
3. Lift the fruit and vegetable container cover ①, move it to the rear ② and remove it.

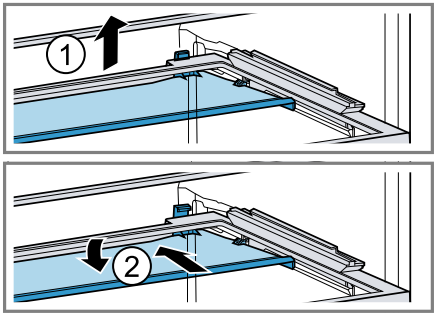

4. Lift the shelf above the fruit and vegetable container at the front ① and remove it ②.

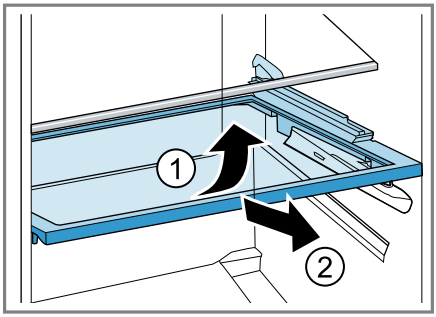

Note: When reinserting the shelf above the fruit and vegetable container, make sure that the lid of the fruit and vegetable container is correctly fitted. The lid of the fruit and vegetable container ensures even air distribution and optimal cooling.

Removing the container rail

- Loosen the retainer ① and remove the container rail ②.

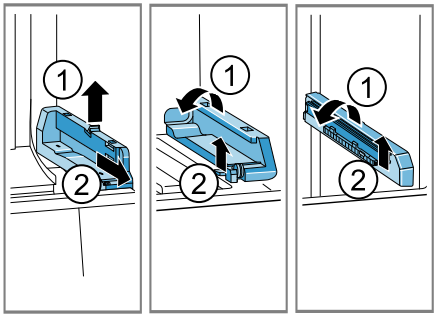

16 Troubleshooting

You can rectify minor faults on your appliance yourself. Read the troubleshooting information before contacting after-sales service. This will avoid unnecessary costs.

⚠ **WARNING**
Risk of electric shock!
Improper repairs are dangerous.

- Repairs to the appliance should only be carried out by trained specialist staff.
- Only use genuine spare parts when repairing the appliance.
- If the power cord or the appliance power cable of this appliance is damaged, it must be replaced with a special power cord or special appliance power cable, which is available from the manufacturer or its Customer Service.

Fault	Cause and troubleshooting
The appliance is not cooling, the displays and lighting are lit.	Showroom mode is switched on. **1.** Disconnect the appliance from the mains. Unplug the appliance from the mains or switch off the circuit breaker in the fuse box. **2.** Reconnect the appliance after five minutes. ✔ The temperature display shows an animation and the control panel is locked. **3.** Wait until the animation ends. **4.** Press and hold **super** ❄ for 10 seconds until 4 audible signal tones sound. ✔ "OFF" appears briefly on the control panel. **5.** After a short time, check whether your appliance is cooling.

Fault	Cause and troubleshooting
The LED lighting does not work.	Different causes are possible. ▸ Call customer service. The customer service number can be found in the enclosed customer service directory.
The refrigeration unit is switching on more frequently and for longer.	The appliance has been opened frequently. ▸ Do not open appliance door unnecessarily.
	External ventilation openings are covered up. ▸ Remove any obstructions from in front of the external ventilation openings.
	Not a fault. Modern refrigeration machines switch on more frequently and have different power levels to cool more efficiently. ▸ Remove any obstructions from in front of the external ventilation openings. ▸ Install the appliance as far away as possible from heating elements, cookers and other heat sources. Avoid prolonged exposure of the appliance to direct sunlight. ▸ Only open the appliance door as briefly as necessary. ▸ Allow hot food and drinks to cool down first before storing in the appliance.
Side panels of the appliance are warm.	Not a fault. The side panels contain pipes which heat up during the cooling process. Units touching the appliance will not be damaged by the heat. No action required.
Home Connect is not working properly.	Different causes are possible. ▸ Go to *www.home-connect.com*.
"E" or "d" appears on the temperature display.	The electronics have detected a fault. **1.** Switch off the appliance. →*Page 15* **2.** Disconnect the appliance from the mains. Unplug the appliance from the mains or switch off the circuit breaker in the fuse box. **3.** Reconnect the appliance after five minutes. **4.** If the message still appears on the display, call Customer Service. The customer service number can be found in the enclosed customer service directory.
A signal tone sounds, **alarm** 🔕 and the light bar flash red. The door alarm is switched on.	The appliance door is open. ▸ Close the appliance door.

Fault	Cause and troubleshooting
A signal tone sounds, **alarm** 🔕 and the light bar below the freezer compartment selection flash red. The temperature alarm is switched on.	Different causes are possible. ▸ Press **alarm** 🔕.
	External ventilation openings are covered up. ▸ Remove any obstructions from in front of the external ventilation openings.
	Larger quantities of fresh food have been put in. ▸ Switch on Super freezing before placing a larger amount of food in the appliance. → *"Switching on Super freezing", Page 16*
The temperature differs greatly from the setting.	Different causes are possible. **1.** Switch off the appliance. →*Page 15* **2.** Switch the appliance back on after five minutes. →*Page 14* ▸ If the temperature is too warm, check the temperature again after a couple of hours. ▸ If the temperature is too cold, check the temperature again on the following day.
Condensation accumulates on the surface of the appliance and on the shelves inside.	The water contained in warm and humid air condenses on the colder surfaces of the appliance. **1.** Wipe away the condensation water with a soft, dry cloth. **2.** Open the appliance as briefly as possible. **3.** Ensure that the appliance is always closed properly.
The appliance hums, bubbles, buzzes, gargles, clicks or crackles.	Not a fault. A motor is running, e.g. refrigerating unit, fan. Refrigerant flows through the pipes. The motor, switches or solenoid valves are switching on or off. Automatic defrosting is running. No action required.
The appliance makes noises.	The appliance is not level. ▸ Align the appliance using a spirit level and the screw feet.
	The appliance is not free-standing. ▸ Observe the minimum clearances for the appliance.
	Fittings wobble or stick. ▸ Check the removable fittings and, if required, replace these.
	Bottles or containers are touching. ▸ Move the bottles or containers away from each other.
	Super freezing is switched on. No action required.

16.1 Power failure

During a power failure, the temperature in the appliance rises; this reduces the storage time and the quality of the frozen food.
On the website for your appliance, the technical data provides you with the storage times for frozen food in the event of a fault.

Notes

- Open the appliance as little as possible during a power failure and do not place any other food in the appliance.
- Check the quality of the food immediately after a power failure.
  - Dispose of any frozen food that has defrosted and is hotter than 5 °C.
  - Cook or fry slightly thawed frozen food, and then either consume it or freeze it again.

17 Storage and disposal

17.1 Taking the appliance out of operation

1. Switch off the appliance. →*Page 15*
2. Disconnect the appliance from the power supply.
   Unplug the appliance from the mains or switch off the circuit breaker in the fuse box.
3. Remove all of the food.
4. Clean the appliance. →*Page 22*
5. **ATTENTION –** Objects jammed between the door and the housing may damage the door hinge.
   - ▸ Open the door until it remains open by itself.
   - ▸ Do not insert any objects between the door and the housing.

   To guarantee the ventilation inside the appliance, leave the appliance open.

17.2 Disposing of old appliance

Valuable raw materials can be reused by recycling.

⚠ WARNING
Risk of harm to health!
Children can lock themselves in the appliance, thereby putting their lives at risk.

- ▸ Leave shelves and containers inside the appliance to prevent children from climbing in.
- ▸ Keep children away from the redundant appliance.

⚠ WARNING
Risk of fire!
If the tubes are damaged, flammable refrigerant and harmful gases may escape and ignite.

- ▸ Do not damage the tubes of the refrigerant circuit or the insulation.

1. Unplug the appliance from the mains.
2. Cut through the power cord.
3. Dispose of the appliance in an environmentally friendly manner.
   Information about current disposal methods are available from your specialist dealer or local authority.



This appliance is labelled in accordance with European Directive 2012/19/EU concerning used electrical and electronic appliances (waste electrical and electronic equipment - WEEE).
The guideline determines the framework for the return and recycling of

used appliances as applicable throughout the EU.

18 Customer Service

Function-relevant genuine spare parts according to the corresponding Ecodesign Directive can be obtained from Customer Service for a period of at least 10 years from the date on which your appliance was placed on the market within the European Economic Area.
Furthermore, our Customer Service will continue to provide you with other function-relevant and storable genuine spare parts for up to 15 years from the date on which your appliance was placed on the market. For more information, please contact our Customer Service team.

Note: Under the terms of the manufacturer's warranty applicable to the location, the use of Customer Service is free of charge. The minimum duration of the warranty (manufacturer's warranty for private consumers) in the European Economic Area is 2 years according to the terms of warranty applicable to the location. The terms of warranty do not affect other rights or claims held by yourself under local legislation.

Detailed information about the warranty period and the warranty conditions in your country is available via the QR code on the enclosed document on service contacts and warranty conditions, from our customer service or on our website.
You can find the contact details for our customer service via the QR code on the enclosed document on service contacts and warranty conditions or on our website.

18.1 Product number (E-Nr.), production number (FD) and consecutive numbering (Z-Nr.)

If you contact Customer Service, you will require the product number (E-Nr.), the production number (FD) and the consecutive numbering (Z-Nr.), which you can find on the appliance's rating plate.
→ *"Appliance", Fig.* **1** / **4** *Page 12*
Make a note of your appliance's details and the Customer Service telephone number to find them again quickly.

19 Technical data

Refrigerant, cubic capacity and further technical specifications can be found on the rating plate.
→ *"Appliance", Fig.* **1** / **4** *Page 12*
You can find more information about your model online at *https://eprel.ec.europa.eu/*[1]. This web address is linked to the official EU EPREL product database. Please then follow the instructions on searching for the model. The model identifier is made up of the characters before the slash in the product number (E-Nr.) on the rating plate. Alternatively, you can also find the model identifier in the first line of the EU energy label.
The number of light sources included depends on the model.

[1] Only applies to countries in the European Economic Area

This product contains a light source from energy efficiency class E.
The light sources are available as a spare part and must only be replaced by trained specialist staff.

19.1 Information regarding Free and Open Source Software

This product includes software components that are licensed by the copyright holders as free software or open source software.
The applicable licence information is stored on your home appliance. You can also access the applicable licence information via your Home Connect app: "Profile -> Legal information -> Licence Information". [1]
You can also download the licence information on the brand product website. (Please search on the product website for your appliance model and additional documents). Alternatively, you can request the relevant information from oss-request@bshg.com or BSH Hausgeräte GmbH, Carl-Wery-Str. 34, 81739 Munich, Germany.
The relevant source code will be made available on request.
Please send your request to oss-request@bshg.com or BSH Hausgeräte GmbH, Carl-Wery-Str.34, 81739 Munich, Germany.
Subject: „OSSREQUEST“
The cost of performing your request will be charged to you. This offer is valid for three years from the date of purchase or at least as long as we offer support and spare parts for the relevant appliance.

20 Declaration of Conformity

BSH Hausgeräte GmbH hereby declares that the appliance with Home Connect functionality conforms to the essential requirements and other relevant provisions of Directive 2014/53/EU.
A detailed RED Declaration of Conformity can be found online at *www.bosch-home.com* among the additional documents on the product page for your appliance.

CE

Hereby, BSH Hausgeräte GmbH declares that the appliance with Home Connect functionality is in compliance with relevant statutory requirements. [2]
A detailed Declaration of Conformity can be found online at *www.bosch-home.co.uk* among the additional documents on the product page for your appliance. [2]

UK CA

2.4 GHz band (2400–2483.5 MHz): Max. 100 mW

[1] Depending on the appliance specifications
[2] Only applies to Great Britain

5-GHz band (5150–5350 MHz + 5470–5725 MHz): max. 150 mW

	BE	BG	CZ	DK	DE	EE	IE	EL	ES
	FR	HR	IT	CY	LI	LV	LT	LU	HU
	MT	NL	AT	PL	PT	RO	SI	SK	FI
	SE	NO	CH	TR	IS	UK (NI)			
5 GHz WLAN (Wi-Fi): For indoor use only.									

AL	BA	MD	ME	MK	RS	UK	UA
5 GHz WLAN (Wi-Fi): For indoor use only.							

20.1 Statement of Compliance for Great Britain

The full Statement of Compliance according to the Product Security and Telecommunications Infrastructure (Security Requirements for Relevant Connectable Products) Regulations 2023 can be found online at www.bosch-home.co.uk among the additional documents on the product page for your appliance.

Product type
This statement of compliance covers the products described in this information for use whose model identifier group is seen on the title page. The full model identifier is made up of the characters before the slash in the product number (E no.) which can be found on the rating plate. Alternatively, you can also find the model identifier in the first line of the UK Energy Label.

Name and address of manufacturer
BSH Hausgeräte GmbH, Carl-Wery-Strasse 34, 81739 München, Germany
This statement of compliance is prepared by the manufacturer.

The manufacturer, BSH Hausgeräte GmbH deems that it has complied with

- provision 5.1-1 of ETSI EN 303 645 v3.1.3 and, where relevant, provision 5.1-2 of ETSI EN 303 645 v3.1.3;
- provision 5.2-1 of ETSI EN 303 645 v3.1.3;
- provision 5.3-13 of ETSI EN 303 645 v3.1.3.

Support period
BSH Hausgeräte GmbH will provide security updates that are necessary to maintain the main functions free of charge until at least 28/02/2036.

Bosch Home Connect App

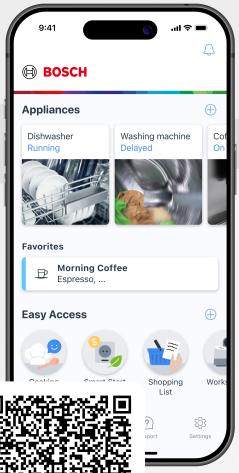

Connect your home appliance today and enjoy the following benefits:

- **Never waste energy again. If you have left the door open, you will receive a notification.**
- **Early reminders of food expiry dates. This way, you produce less waste and save money at the same time.**
- **Activate super cooling/super freezing when you are out shopping to create the perfect conditions for your purchases when you arrive home.**

Need some help? You can find it here.

Expert advice on your Bosch home appliances, help with problems or repairs by professionals from Bosch.

Discover all the different ways Bosch can assist you:
www.bosch-home.com/service

The contact details of all countries are listed in the attached service directory.

BSH Hausgeräte GmbH
Carl-Wery-Straße 34
81739 München, GERMANY
www.bosch-home.com

A Bosch Company

Valid within Great Britain:
Imported to Great Britain by
BSH Home Appliances Ltd.
Grand Union House
Old Wolverton Road
Wolverton, Milton Keynes
MK12 5PT
United Kingdom

8001399060 (060819)
en