ENGLISH

FORNO

Alta Qualita

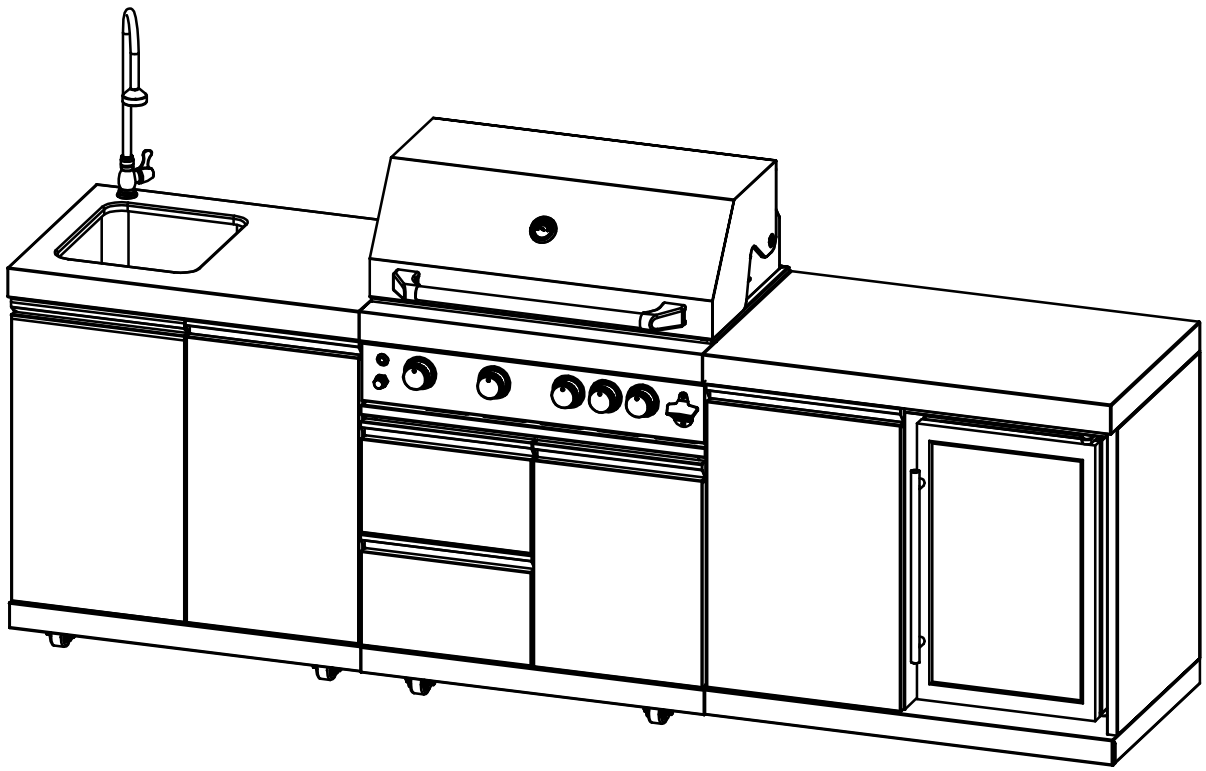

FORNO Outdoor Kitchen set, 3 + 1 infrared Burner BBQ

MODEL NUMBER SERIES:

FODKT2506 WHT/FODKT2506 BLK

INSTRUCTION MANUAL & INSTALLATION GUIDE

USE OUTDOORS ONLY

Read these instructions carefully before using your appliance, and keep it carefully.
If you follow the instructions, your appliance will provide you with many years of good service.

TABLE OF CONTENTS

Customer Care	3
Warning	4
Important Safety	5
Proper Location of the Grill	7
Product Technical Data	9
Product Dimensions	10
Names of Parts and Accessories	11
Installations	13
Connection	15
Using Your Grill	17
Cleaning and Maintenance	20
Troubleshooting	23
Natural gas conversion	24
Warranty	30
For Rotisserie Kit	32

Customer Care

Thank you for purchasing a Forno product. Please read the entire instruction manual before operating your new appliance for the first time. Whether you are an occasional user or an expert, it will be beneficial to familiarize yourself with the safety practices, features, operation and care recommendations of your appliance.

Both the model and serial number are listed inside the product. For warranty purposes, you will also need the date of purchase .

Record this information below for future reference.

Product Information

Model Number: _____

Serial Number:

Date of Purchase: _____

Purchase Address And Phone: _____

Service Information

Use these numbers in any correspondence or services calls concerning your product.

If you received a damaged product, immediately contact Forno.

Check the troubleshooting guide before you call for service. It lists the causes of minor operation problems that you can correct yourself.

“Need some quick help? Simply scan the qr code and get access to our fast support form. We’re always here to assist you with any questions or concerns you may have. So, don’t hesitate to reach out!”

Services in Canada and Untied States

Keep the instruction manual handy to answer your questions. If you don’t understand something or need more assistance, please visit our website for fast support. Please provide us your name, number, address,serial number of the product that troubleshooting, proof of purchase, and a short description of the issue. A customer service representative will contact you as soon as possible. All warranty work needs to be authorized by FORNO customer service. All our authorized service providers are carefully selected and rigorously trained by us.

Danger

- If you smell gas
- Shut off gas to the appliance
- Extinguish any pen fame
- Open lid
- If odor continues, keep away from the appliance and immediately all yur gas supplier or yur fire department

Warning

- Do not store or use gasoline or other fammable lquids or vapors in the vicinity of this or any ther ppliance.
- An LP Cylinder not connected for use shall not be stored in the vicinity of this or any appliance .

California Proposition 65 Warning:

- Chemicals known to the State of California to cause cancer, birth defects or other reproductive harm are found in and/or created by the combustion of natural gas, propane, butane and other fuels. Always operate this unit as described in the owner's manual and in well ventilated areas.

Read all instructions before you operate your grill. Save these instructions!

Placement and Location

- **For outdoor use only.**
- Never locate this appliance in an enclosed room, under a sealed overhead structure, or in any type of enclosed area such as a garage, shed, or breezeway. Keep clear of trees and shrubs.
- Do not place this grill under or near windows or vents that can be opened into your home.
- Grills are not intended for installation in or on recreational vehicles or boats.
- Maintain sufficient distance as to not overheat any overhead combustible material such as a patio cover.
- The area surrounding your new grill should be kept clean and free from flammable liquids and other combustible materials such as mops, rags or brooms, as well as solvents, cleaning fluids, and gasoline.
- Do not use the grill, grill cabinet, or area surrounding the grill as a storage area for flammable or plastic items. Do not store the liquid propane (LP) cylinder in the vicinity of this or any other appliance when it is not being used.

Set-Up

- Before installing built in grills in enclosures, copy all product information such as model number, serial number and type of grill (e.g. natural gas or LP) and store information in a safe place. This information is located on a plate located behind the grill and is visible when the hood is lowered or on the right side of the chassis. There is an area on the back cover of this manual where you can write down this information.
- We recommend that a licensed contractor install your Cal Flame™ grill. Installation must conform to local codes, or in the absence of local codes, with either the *National Fuel Gas Code,* ANSI Z223.1 / NFPA54, *Natural Gas and Propane Installation Code*, CSA B149.1, or *Propane Storage and Handling Code*, B149.2), as applicable.
- Your Cal Flame™ grill must be plugged into a permanent, grounded 110V outlet with a dedicated 15A GFCI breaker in accordance with local codes or the *National Electrical Code, ANSI / NFPA 70*, or the *Canadian Electrical Code, CSA C22.1*.
- Do not use an extension cord to supply power to your Cal Flame™ grill. Such use may result in fire, electrical shock or other personal injury. Do not install a fuse in the neutral or ground circuit. A fuse in the neutral or ground circuit may result in an electrical shock hazard. Do not ground this appliance to a gas supply pipe or hot water pipe. Keep any electrical supply cords and the fuel supply hose away from any heated surfaces.
- To prevent fire and smoke damage, remove all packaging material before operating grill.
- Before you start cooking, clean the entire grill thoroughly with hot, soapy water. This is necessary to remove residual solvents, oil and grease used in the manufacturing process. The grates should also be thoroughly cleaned in the same manner.

DANGER

What To Do If You Smell Gas

- Shut off gas to the appliance.
- Extinguish any open flame.
- Open lid.
- If odor continues, keep away from the appliance and immediately call your gas supplier or your fire department.

Operation

- Do not use grill for other than intended use.
- In the event that a burner goes out, turn burner knobs to the full OFF position, fully open the grill hood and let it air out. Do not attempt to use the grill until the gas has had time to dissipate.
- Never use the grill if the drip pan is not properly installed. Drip pan should be pushed all the way to the rack located just under the grill. Fire or explosion can result from an improperly installed drip pan.
- Keep all electrical supply cords and the rotisserie

motor cord away from the heated areas of the grill.

- Never use the grill or side burner in windy conditions. If used in a consistently windy area a windbreak will be required. Always adhere to the specified clearances listed in this manual.
- Never line the grill or side burners with aluminum foil.
- When the unit is not in use, be sure to turn off the gas at the LP tank.
- Do not install or operate your grill unit in such a manner that the cross ventilation openings are blocked. Fresh air must be able to pass though installed vents to safeguard against residual gas accumulation. Failure to allow proper ventilation may cause fire or explosion.
- When handling LP gas line and connectors, do not allow them to come in contact with any metal surfaces of the cabinet. Do not drop LP connectors.
- Do not use fuel such as charcoal briquettes in gas grills.
- Gas sources to the grill and side burners must be regulated. Do not operate grill or side burners if regulators have been removed, fire or explosion can occur.
- Never leave the grill and side burners unattended when in use. When using pots and pans, boil-overs will cause smoking and greasy boil-overs may ignite.
- Always use the proper size pan. Select utensils with flat bottoms large enough to cover the burner. The use of under-sized utensils exposes the sides of the utensils to direct contact with a portion of the flame. This can scorch utensils and hamper cleanup. Excessive flames on large stainless steel pots can result in permanent discoloration. For best results, we recommend commercial quality aluminum pans and utensils.
- Always position handles of utensils so they do not extend over adjacent work areas or cooking areas. This reduces the risk of burns, ignition of flammable materials, and spillage due to accidental contact with the utensils.
- Do not use water on grease fires. Never pick up a flaming pan. Turn the appliance off and smother the flaming pan with a tight-fitting lid, a cookie sheet or a flat tray. For flaming grease outside of the pan, smother it with baking soda or use a dry chemical or foam-type fire extinguisher.
- Never allow clothing, pot holders or other flammable materials come in contact with or be close to any grate, burner or hot surface until it has fully cooled. Never wear loose fitting or hanging garments while using your grill. Fabric may ignite and result in personal injury.
- When using the grill, do not touch the grill rack, burner grate, or immediate surroundings as these areas become extremely hot and can cause burns. Use handles or knobs.
- Only use dry pot holders and do not use a towel or other bulky cloth in place of pot holders. Moist or damp pot holders used on hot surfaces can cause burns.
- Do not heat any unopened glass or metal container of food on the grill. Pressure may build up and cause the container to burst, possibly resulting in serious personal injury or damage to the grill.
- Do not reach over your grill or any other surfaces when hot or in use.

Maintenance and Repair

- Spiders and other insects can nest in the burners of the grill and block the gas and airflow to the burner ports. This creates a dangerous condition that can result in a fire behind the valve panel. Inspect and clean the burners periodically and follow the guidelines in the Cleaning and Maintenance section of this manual.
- Unless specifically recommended in this manual, do not repair or replace any part of the grill. A qualified technician should perform all service. Any repairs made by a non-LMS approved dealer technician will void your warranty.

Storage

- When your gas grill is not in use, turn off the gas at the supply cylinder.
- Storage of a grill indoors is permissible only if the supply cylinder is disconnected and removed.

Precautions Regarding Children

- Never leave children unattended in the area where the grill is being used. Close supervision of children is necessary when any appliance is use near children.
- Do not store items of interest to children around or below the grill.
- Never allow children to sit or stand on any part of the grill.

Proper Location of the Grill

Here are some general considerations when determining where to place your new barbecue island. Be certain that your installation will meet all city and local safety codes and requirements.

When planning your grill location, access to gas lines and 110V power supplies should be considered. If you are using natural gas, the location with the shortest gas line run is recommended. You may need a grounded, dedicated, 15A 110V GFCI power source for use of your appliances (e.g., lights, rotisserie, refrigerator, receptacles, etc.).

When determining a suitable location, consider factors such as exposure to wind, proximity to traffic paths, and windows that open into the home.

Locate the grill enclosure any place where there is adequate ventilation. The size and configuration of your house and yard will determine how you should locate your grill enclosure, but as a general rule, do not place it under or near windows that can be opened into your home. Ventilation is address in greater detail in the next section.

The sides, bottom and back of the grill enclosure should not be any closer than 36" to combustible construction.

To reduce the risk of personal injury caused by reaching over a hot appliance, avoid locating cabinet storage space directly above the outdoor grill.

Grills are designed for outdoor use only .

Carbon Monoxide Hazard

This appliance can produce carbon monoxide which has no odor.



Using it in an enclosed space can kill you.

Never use this appliance in an enclosed space such as a camper, tent, car, or home.

Ensuring Proper Ventilation

Do not locate your barbecue island in an enclosed area, which is any covered area that is walled on two, three, or four sides. This includes areas or rooms such as a garage, shed, breezeway, patio, cabana, etc.

Although some enclosed areas may have windows, screens, or ventilation systems, they are nevertheless considered to be hazardous and may cause damage, injury, or death . Enclosed areas are NOT approved for a barbecue island .

Do not locate your barbecue island under a sealed overhead structure. Acceptable overhead structures allow for airflow, such as screen or lattice.

You can install an awning over your barbecue island, provided you make sure it is high enough to prevent damage or fire. We recommend a minimum overhead distance of six feet from the top of the grill hood.

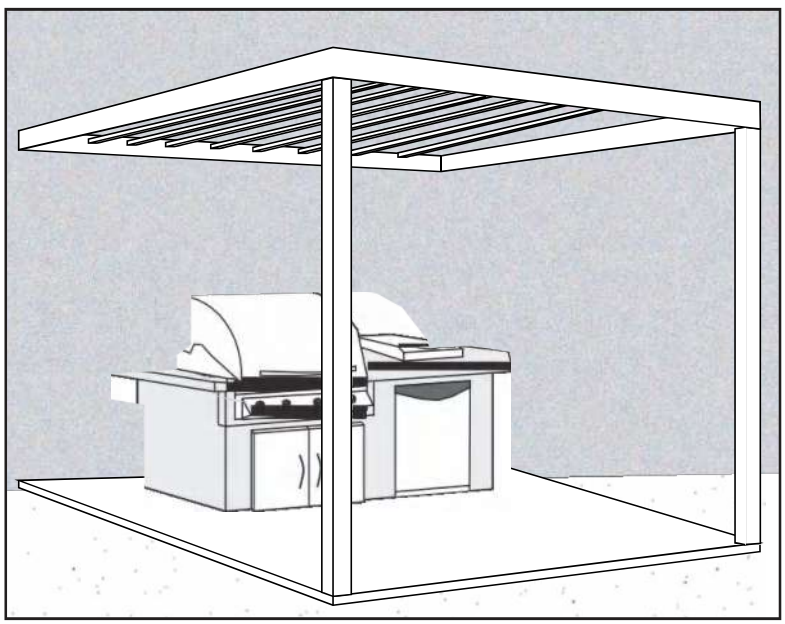

- **Solid foundation**
- **Open on three sides**
- **Minimum distance of six feet overhead from combustible material**
- **Overhead is not sealed**
- **Not placed near windows**
- **No overhead storage**
- **No combustible materials stored nearby**

Explicit information specifying the necessity for maintaining proper clearances from combustible construction ,the specific minimum clearances from such construction to the sides and back of the outdoor cooking gas appliance ,and that the outdoor cooking gas appliance shall not be used under overhead combustible construction .

Construction materials

PCFetch . will not be held responsible for property damage, injury, or death as a result of locating a grill enclosure in a non-approved location or using non-approved construction materials .

DO NOT use combustible materials for the built-in construction .

Acceptable building materials: Brick, cinder block, steel frame, hardiboard, granite, tile, glass brick, concrete, cement, stucco, stone.

Unacceptable building materials: Wood of any sort, laminate or synthetic materials, plastics, linoleum, fiberglass.

In addition, we do not recommend using materials that are susceptible to damage or decomposition by weather, such as dry wall or plaster.

Distance of product from wall

Explicit information specifying the necessity for maintaining proper clearances from combustible construction ,the specific minimum clearances from such construction to the sides and back of the outdoor cooking gas appliance ,and that the outdoor cooking gas appliance shall not be used under overhead combustible construction .

WARNING: This product can expose you to chemicals including Chromium (hex avalent compounds), which are known to the State of California to cause cancer and birth defects or other reproductive harm. For more information go to www.p65Warnings.ca.gov

Product technical data

GAS BARBECUE GRILL **ANS Z21.89-2017 • CSA 1.18-2017** **Outdoor Cooking Specialty Gas Appliance** FOR PROPANE GAS & NATURAL GAS PIN NO.80195589	**MODEL: FODKT2506** INPUT RATING:60 ,000BTU/H SERIAL NUMBER ： **For Outdoor Use Only. If Stored Indoors, Detach and Leave Cylinder Outdoors**

* Do not store a spare LP-gas cylinder under or near this appliance.
* Never fill the cylinder beyond 80 percent full.
* If the information beyond is not followed exactly, a fire causing death or serious injury may occur.
* Minimum clearance from sides and back of unit to combustible construction, 36 inches from sides and 36 inches from back.
* Do not use this appliance under overhead combustible surfaces.
* CAUTION: Use only the gas pressure regulator supplied with this appliance. This regulator is set for an outlet pressure of 11 iwc（LPG 27.4kPA NG17. 4kPA ）
* Turn off LP supply at cylinder when appliance is not in use.
* Top cover must be open when main burner(s) is in operation.
* **Lighting instructions**

1.Read instructions before lighting

2.Open lid during lighting.

3.If ignition does not occur in 5 seconds, turn the burner control(s) off, wait 5 minutes, and repeat the lighting procedure.

* **WARNING**

Electrical Grounding Instructions

1. This outdoor cooking gas appliance is equipped with a three-prong(grounding) plug for your protection against shock hazard and should be plugged directly into a properly grounded three-prong receptacle. Do not cut or remove the grounding prong from this plug.
2. Use only with a GFI protected circuit.
3. Use only extension cords approved for outdoor use marked with W-A and rated for the power of this appliance.

	LP	NG	RATE BTU INPUT
Components	Orifice Size	Orifice Size	
Main burner	1.02 MM	1.67MM	12000BTU
Infrared burner	1.05 MM	1.71 MM	12500BTU
Rear burner	1.04 MM	1.67 MM	11500BTU

	Voltage	Frequency	Power
Transformer	120V	60Hz	24W
AC Motor	120V	60Hz	4W
Halogen Lamp	12V	60Hz	10W
LED Light	3V		

CTM Household Appliances Inc
11420 Albert Hudon, Montreal,
Quebec, Canada H1G 3J6

Product Dimension

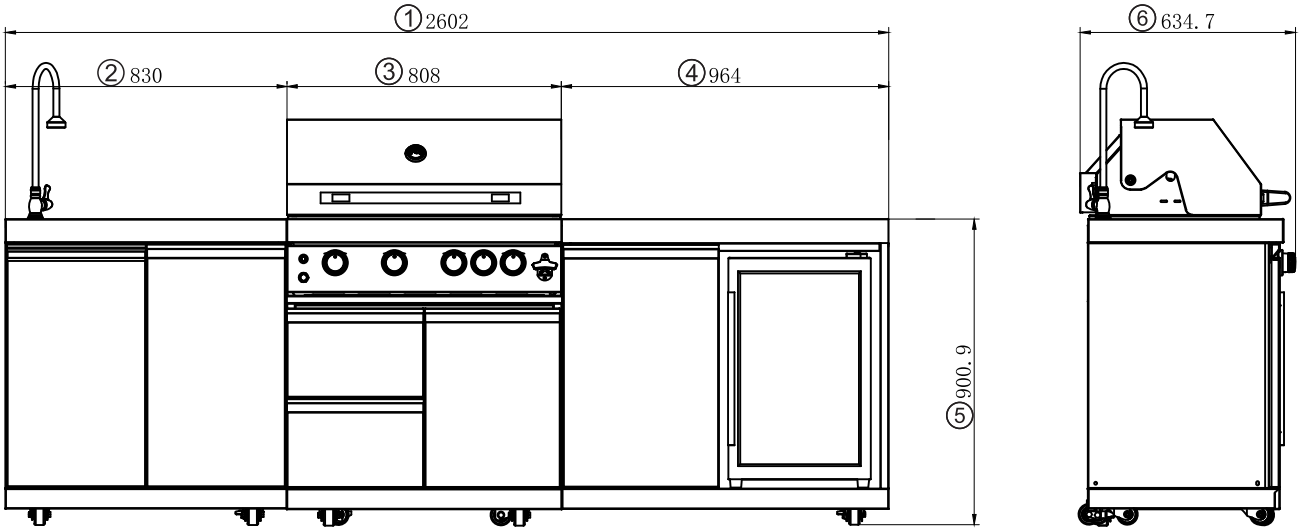

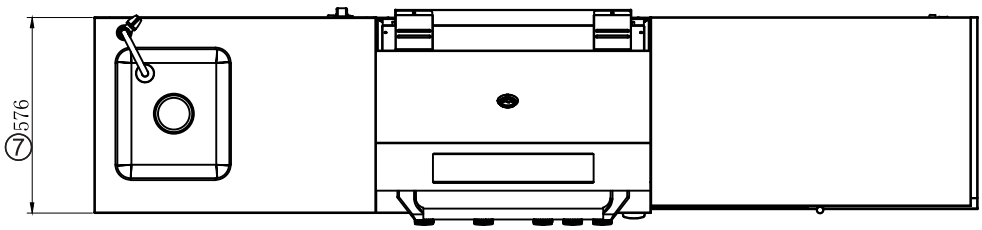

1	2	3	4	5	6	7
Total length	Width of the sink unit	Width of the grill	Width of the fridge unit	Height of the cabinet	Depth of the grill	Depth of the cabinets
102 11/25"	32 67/100"	31 4/5"	38"	35 2/5"	25"	22 17/25"
2602mm	830mm	808mm	964mm	900.9mm	634.7mm	576mm

Cutout

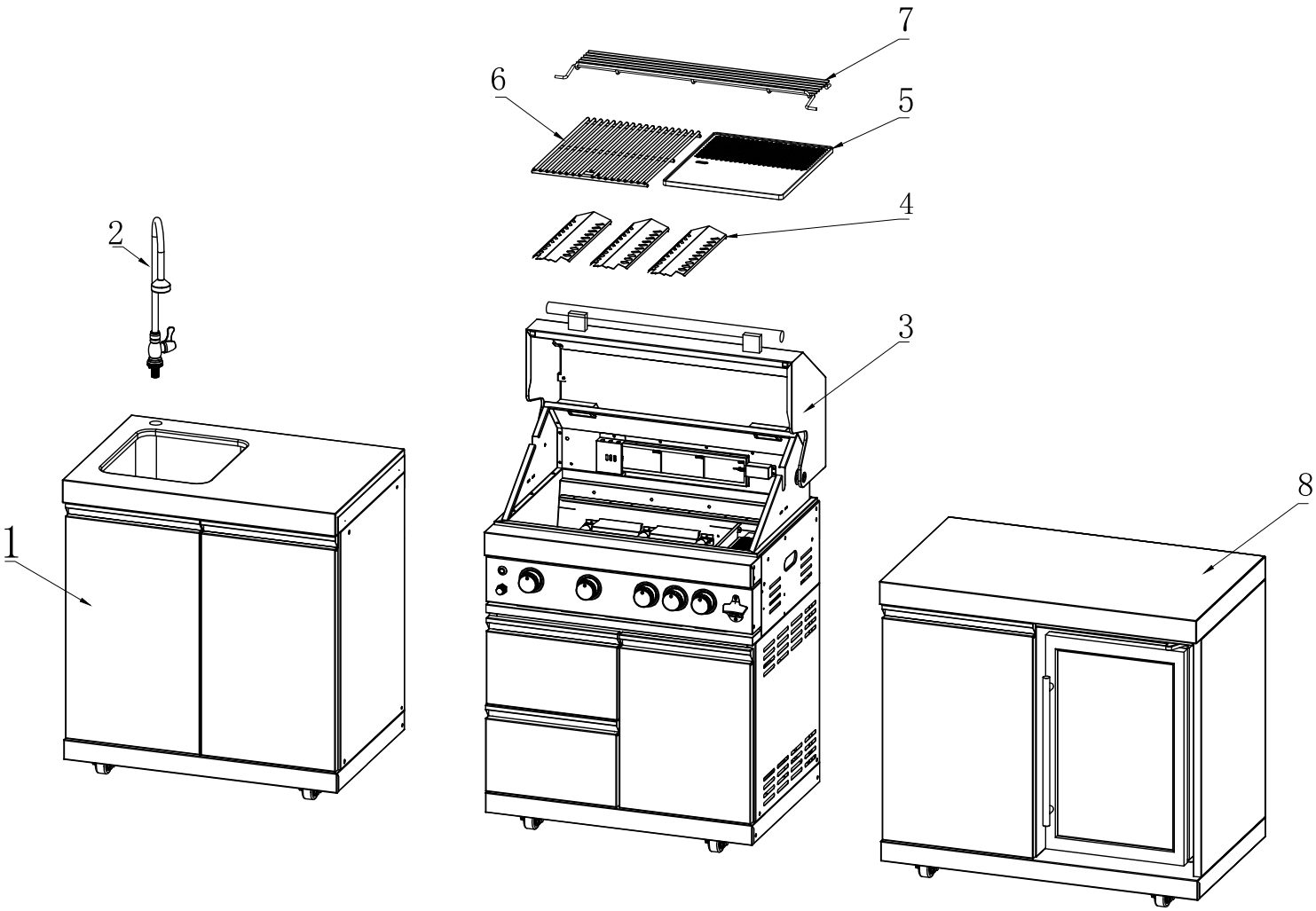

BBQ Parts

NO.	Pic.	Item Name	Qty
1		BBQ Model	1
2		Flame Tamer	6
3	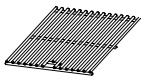	Cooking Grid	2
4	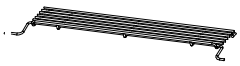	Warming Rack	1
5		AC Motor	1
6		Spit Rod collar	1
7		Collar	1
8		Handle	1
9		Bolt and Nut	2
10		4-Sprong Meat Fork	2
11		Weight Balance	1
12		Motor Bracket	1
13		Spit Rod	1
14		Washer	2

Cabinet Part

NO.	Pic.	Item Name	Qty
1		Sink unit	1
2		Fridge unit	1
3		Faucet	1
4		M6x12	12

Installation

1. Unscrew the small back plate, fasten the faucet. Then assemble back the back the back plate.

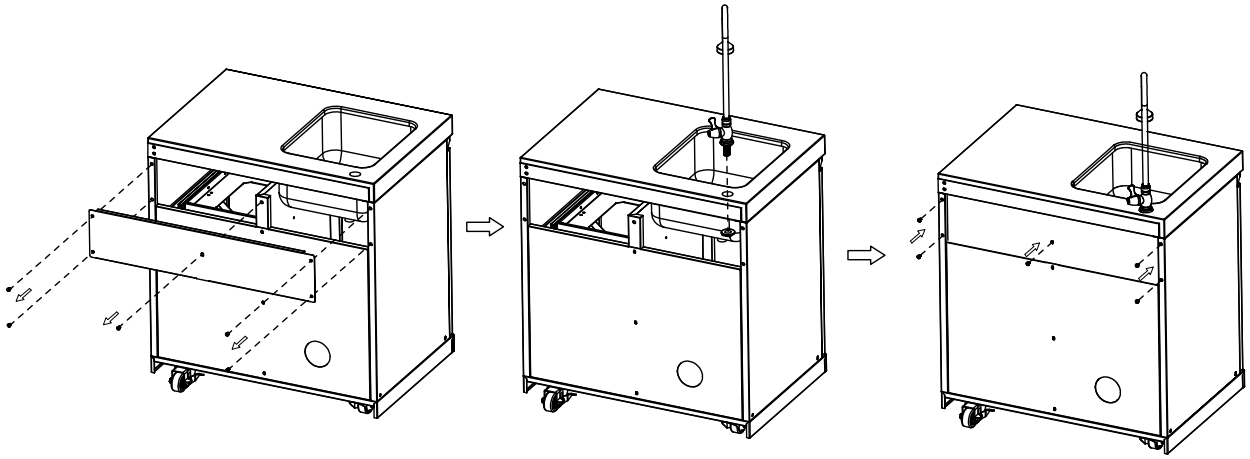

2. M6x12 4PCS

Connect the cabinets and grills from left to right, the sink unit, the 90 degree corner, the grill and the bar table with 4pcs M6x12 screws.

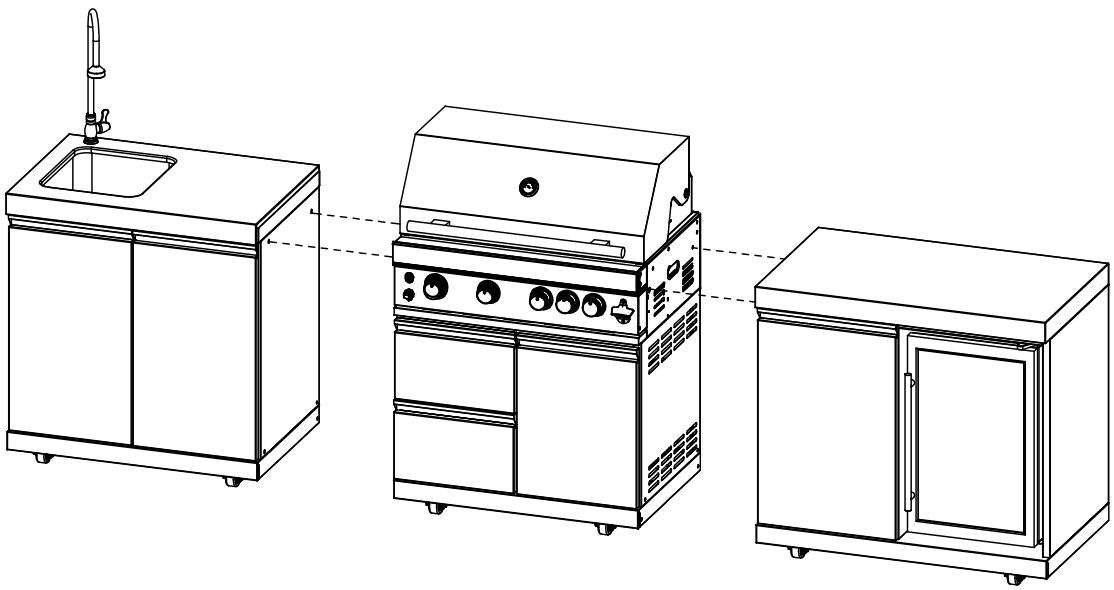

3. M6x12 8PCS

Connect the grill and the cabinets with the bracket with 8pcs M6x12 screws.

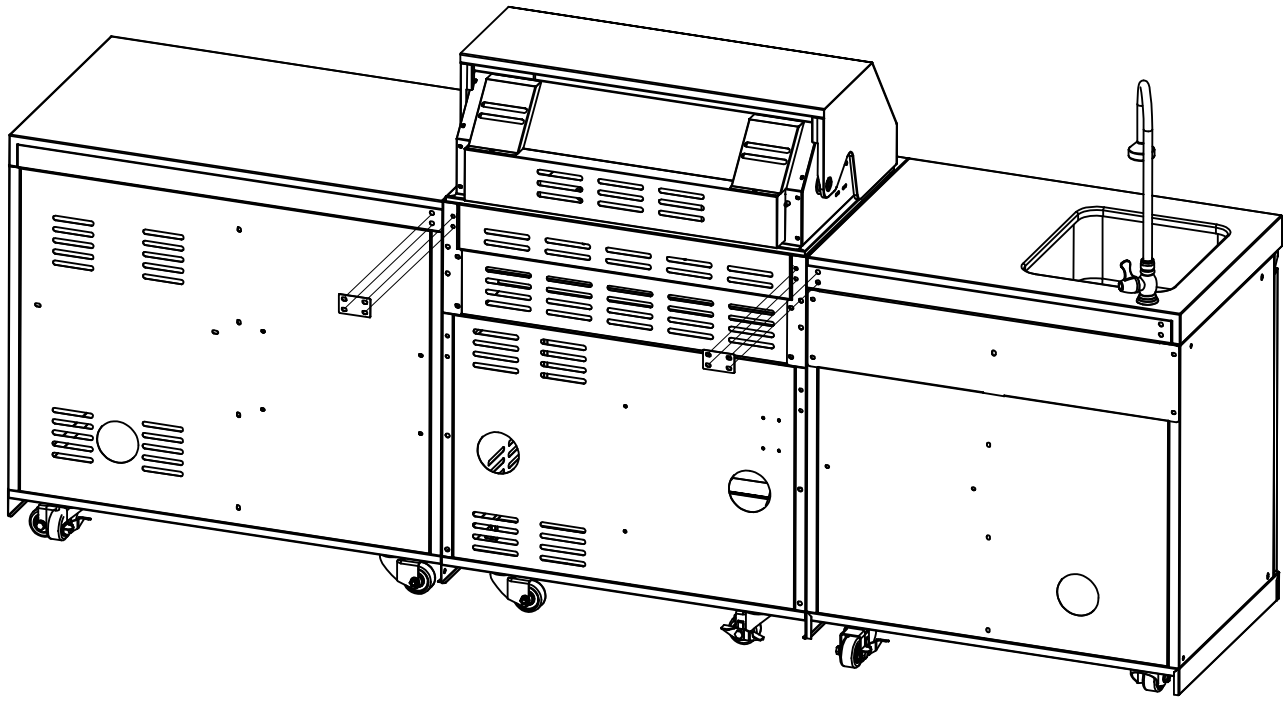

2. Connect the Gas Line to the Grill

Note: Make sure you have converted the grill for natural gas before connecting the gas line to the regulator.

Connecting the grill
connect the gas line to the grill using the appropriate connection for your gas type.

Other cylincers may be acceptable to use with the appliance provided, as long as they are compatible with the appliance retention. The cylinders is mounted to the appliance through the retention.
See illustration



3. Connect to a Gas Source

Liquid Propane Connection

Use the pressure regulator and hose assembly supplied with the grill, or a regulator and hose assembly with the same specifications. Replacement LP regulator and hose must have a coupling nut that will connect to a QCC-1 cylinder valve on one end and a female fitting that will connect to a 3/8" tapered fitting on the grill manifold. See the figures below.

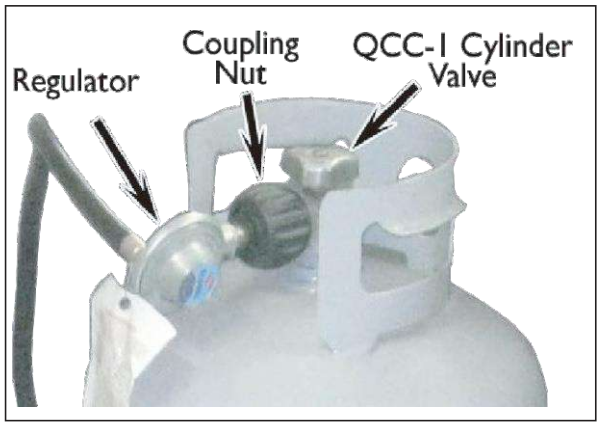

Connect the brass fitting to the manifold behind the grill. Do not use Teflon tape or plumber's dope. Do NOT remove the NG regulator from the manifold. Connect the coupling nut to the LP cylinder valve.

When you are finished connecting to the gas source, perform a leak test.

Natural Gas Connection

Connect the gas line to the NG stub-up inside the barbecue island. When you are finished connecting to the gas source, perform a leak test.

Leak Testing Procedure

Perform a leak test at least once a year whether the gas supply cylinder has been disconnected or not. In addition, whenever the gas cylinder is connected to the regulator or whenever any part of the gas system is disconnected or replaced, perform a leak test.

As a safety precaution, remember to always leak test your grill outdoors in a well-ventilated area. Never smoke or permit sources of ignition in the area while doing a leak test. Do not use a flame, such as a lighted match to test for leaks. Use a solution of soapy water.

1. Prepare a leak testing solution of soapy water by mixing in a spray bottle one part liquid soap to one part water.
2. Make sure all the control knobs are in the OFF position.
3. Turn on the gas.
   a. On natural gas systems, turn the main feed valve to the grill.
   b. On LP systems, turn the cylinder valve knob counter clockwise one turn to open.
4. Apply the leak-testing solution by spraying it on joints of the gas delivery system. Blowing bubbles in the soap solution indicates that a leak is present.
5. Stop a leak by tightening the loose joint or by replacing the faulty part with a replacement part recommended by the manufacturer. Do not attempt to repair the cylinder valve if it is damaged. The cylinder must be replaced.
6. Turn all control knobs back to the full OFF position.

If you are unable to stop a leak:

1. Turn all control knobs back to the full OFF position.
2. Shut off the gas supply to the grill and release pressure in the hose and manifold by pushing in and turning any of the control valves one quarter turn counter-clockwise.
3. On LP systems, remove the cylinder from the grill.
4. Call an authorized gas appliance service technician or an LP gas dealer.

Do not use the appliance until the leak is corrected.

Using Your Grill

Read all instructions before you operate your grill .

We recommend you wash your entire grill with soap and water prior to lighting it for the first time. Oils are used during the manufacturing process and some residual oil may still be on the stainless steel parts of your grill. Washing will reduce the possibility of discoloration. We also recommend you keep your grill covered when not in use. This will minimize the amount of dust and dirt that accumulates on your grill and extend the life of your grill.

Remember to use your grill safely by following these reminders:

- It is dangerous to use barbecue grills and side burners in any manner other than for what it is designed for.
- Do not use charcoal in a gas grill or side burner.
- Do not heat sealed containers such as cans or jars on grills or side burners. Explosion may result resulting in injury or death. Any sealed container, such as a pressure cooker, must have a properly operating pressure relieve valve to minimize explosion hazard.
- Never put combustible material such as paper, cloth, or flammable liquids on your grill at any time. Do not use grill, side shelves, cabinets, or any area around grill to store flammable materials.
- Never operate main burners and rear infrared convection burners at the same time. Excessive grill temperatures will result.

Basic Grill Operation

Before lighting, make sure all burner controls are off. Do not attempt to light the burners if the smell of gas is present. Check the connection with a soap and water solution after attaching the hose. For LP units, make sure there is gas in the tank and it is sitting upright. For natural gas units, make sure the shut off valve is on.

1. Make sure the drip tray is in place.
2. Light the grill burners using the instructions on the previous page.
3. Turn the control knob to HIGH and preheat the grill for 15 minutes. Close the top cover during the appliance preheat period.
4. Place the food on the grill and cook to desired completion. Adjust heat setting if necessary. You may set the control knob to any position between HIGH and LOW.
5. Allow the grill to cool and clean the drip tray after each use.

Do not leave the grill unattended while cooking.

Gas Cylinder Orientation

LP gas cylinder must be up oriented upright during operation for proper vapor withdrawl. Operating the grill with the cylinder on it side will allow liquid gas to flow into the regulator. Erratic gas flow will occur, resulting in possible flare-ups or explosion.





Warning

NEVER cover the entire cooking or grill surface with griddles or pans. Overheating will occur and burners will not perform properly when combustion heat is trapped below the cooking surface.

CAUTION: NEVER spray water on a hot gas unit. This may damage porcelain or cast iron components.

Lighting the Burners

Each time you light the grill, check the following:

- Inspect the hose before using the grill. If there is excessive abrasion or wear, or if the hose is cut, it must be replaced prior to using the grill. If you need a replacement hose, contact your dealer.
- Ensure the area around the barbecue is clear of flammable substances such as gasoline, yard debris, wood, etc.
- Ensure there is no blockage of the airflow through the vent space located below the face of the unit.
- When using propane gas, keep the special ventilation openings in the enclosure free and clear of debris.
- If connected to a propane cylinder, carefully inspect the rubber hose attached to the regulator before each use.
- Ensure the propane cylinder, regulator, and rubber hose are installed in a location not subject to heating above 125º F (51º C).
- Ensure the burner flames burn evenly along both sides of each burner with a steady flame (mostly blue with yellow tipping). If burner flames are not normal, check the orifice and burner for insects or insect nests.
- Ensure the in-line gas valve or gas cylinder valve is always shut OFF when the barbecue is not in use.
- Do not operate the side burner with its cover closed or the back burner with its cover installed.

Electronically Lighting the Burners

1. Open the hood.
2. Keep your face as far away from the burners as possible.
3. Press and rotate the burner knob counter clockwise past the light position to HIGH. You will hear a loud click as the electronic lighter produces a spark.
4. Listen for the sound of the gas igniting. If the burner does not light on the first try, repeat immediately.
5. If the burner does not light after three attempts, turn the control knobs to the OFF position. Wait five minutes until the gas clears before attempting to light it again.
6. Repeat the procedure or try the manual lighting procedure below.
7. Upon successful lighting, repeat the process on the other burners you wish to light.

Manually Lighting the Burners

8. To shut off the burners, rotate the knob and turn to OFF.
9. It is normal to hear a popping sound when the burners are turned off.

WARNING: Do not use standard matches or cigarette lighters to perform match lighting procedures. Serious burns can occur and lighters can explode.

1. Open the hood.
2. If you have just attempted to light the burner, allow five minutes for any accumulated gas to dissipate.
3. Slide out the drip tray from the grill.
4. Keep your face as far away from the burners as possible.
5. Light and insert a long stem match, holding it near the burner ports.
6. Push in and turn the control knob just past the LIGHT position to HIGH.
7. Listen for the sound of the gas igniting. If the burner does not light after five seconds, turn the control knobs to the OFF position. Wait five minutes until the gas clears before attempting to light it again.
8. If the burner does not light after several attempts see Troubleshooting Guide in the back of this manual.

Cooking with the Rotisserie

Plug in the rotisserie in any 110V outlet. The rotisserie motor has an ON/OFF switch that controls the single-speedThe rotisserie motor. rotates in both directions. You can change the direction by turning it off and turning it back on again.

The rotisserie cooks with the infrared back burner, which provides intense searing radiant heat. The location of the rotisserie and burner allows the placement of a rotisserie-basting pan (NOT included) beneath the food to collect juices and drippings for basting and gravy.

Before you can use the rotisserie, you need to mount the brackets and motor to the grill. See page 18 for instructions.

Loading food on the rotisserie rod

1. Hold the handle firmly while sliding one of the fork assemblies (prongs facing away from the handle) onto the rod.
2. Push the rod through the center of the food, then slide the other holder (prongs toward the food) onto the rod.
3. Center the meat on the rod and push the fork assemblies firmly together.
4. Tighten the thumbscrews.
5. To secure any loose portions of your meat, use butcher string (never use nylon or plastic string).6
. Place a basting pan under the food to collect the drippings.

Cooking with the rotisserie

1. Remove the warming rack.
2. Place the pointed end of the rotis rod into the motor and rest the threaded end on the support at the side of the grill. When the rod is pushed as far as possible into the motor, the grooved end of the rod should rest on the right side bracket.
3. If necessary, to offset unbalanced loads, slide the counter weight on to the rod. With the counter weight loose, allow the loaded rod to rotate and come to a stop. Now rotate the counter weight above the rod in a vertical position and tighten the thumbscrew. You can slide the counter weight away from or closer to the rotisserie rod as needed for balanced operation.
4. Light the infrared back burner. It will reach cooking temperature in about one minute. The orange/red glow will even out in about five minutes. The back burner flame can be adjusted to the level of intensity you prefer.

To ensure safe and proper maintenance, we recommend you follow these directions carefully.

Clean internal parts of the grill regularly as determined by the amount of use and foods cooked. The entire grill should be cleaned at least once a year.

In addition, keep the area around your grill clear and free from combustible materials, gasoline, and other flammable vapors and liquids. Do not obstruct the flow of combustion and ventilation air.

DISCONNECT ELECTRICAL SUPPLY BEFORE CLEANING ANY PART OF THE GRILL.

These instructions describe the best way to care for your stainless steel. They apply to grills and barbecue islands with stainless steel fixtures.

Although stainless steel grills will discolor and accumulate grime with regular use, they can keep their original shine with periodic cleaning. We strongly recommend using a surface protectant to prevent smudging and surface rust from accumulating.

The easiest way to clean the grill is immediately after cooking is completed. Doing so will extend the life of your grill, prevent grease fires, and present a pleasant appearance while you grill.

Stainless Steel Care and Cleaning

All exposed stainless steel surfaces require special attention if you want to keep them looking clean and bright. Following these simple instructions will help avoid scratching or damaging the finish and keep your stainless steel attractive.

Cleaning instructions for grill interiors, including racks and burners, are described after this section.

1 . Clean

Thoroughly clean stains, food, and grime using a sponge or damp cloth with warm water and a mild dish soap. Use Fantastik or Formula 409 to remove heavier soil.

2 . Rinse

Thoroughly rinse all surfaces and dry them completely with a clean towel. Do not allow stainless steel to air dry.

3 . Polish

We strongly recommend that you apply a surface protectant to all exposed stainless steel surfaces.

Spray a small amount of WD-40 or Sheila Shine on a piece of paper towel and rub with the grain over the surface of the appliance. Using a clean terry cloth or paper towel, polish the appliance by rubbing with the

Cleaning Products and Materials

DO NOT USE these common cleaning products and materials – they will damage the surface of your stainless steel.

- CLR
- Lime-Away
- Oven cleaner
- Cleansers such as Ajax or Comet
- Ammonia
- Bleach
- Chlorine
- Steel wool pads
- Wire brushes
- Scrapers
- Pumice

We recommend these products for cleaning your stainless steel:

- Mild dish detergent such as Dawn
- Formula 409
- Fantastik
- Instant Rust Out (exterior ONLY)
- WD-40 (exterior ONLY)
- Sheila Shine (exterior ONLY)

We have had best success with Instant Rust Out, but WD-40 works very well too. Instant Rust Out is available in some hardware stores. WD-40 is widely available.

Baking soda, lemon oil, olive oil, vinegar, or club soda can also be effective for cleaning light soil on all stainless steel surfaces.

Do not use steel wool or wire brushes to scrub your grill.

For light soil, use a damp sponge or cloth.

For heavier stains, use a Scotch-Brite scrubber or similar product.

grain until excess liquid is removed and the surface shines. It should not be oily to the touch, however some residue is acceptable.

Furniture polish, such as Old English, can be effective for polishing stainless steel and protecting the surface.

Caution Do not use Instant Rust Out, WD-40, or Sheila Shine near food or on food preparation surfaces as it is a health hazard. This includes the interior of the grill, grill racks, stainless steel sinks, the inside of cabinets, warming drawers, and ovens.

Fire Hazard NEVER spray WD-40 or Sheila Shine near an open flame! These products are extremely flammable while in their aerosol forms.

Rust Removal

It is a common misconception that stainless steel does not rust. It does not stain, corrode, or rust as easily as ordinary steel (it *stains less*), but it is not stain-proof. If not properly protected and maintained, it can corrode, pit, and discolor.

Important Because salt will accelerate rust and corrosion, grill or barbecue island owners who live near the beach need to be diligent in maintaining their stainless steel hardware. You need to clean and polish your stainless steel frequently, apply a protectant, and ensure water does not collect and puddle.

There are two methods of rust removal we recommend:

1 . Rust removal with Instant Rust Out:

Spray exterior stainless steel surfaces with Instant Rust Out. Let it stand for about 30 seconds, then wipe with a clean cloth. Apply a second time if necessary.

Instant Rust Out will leave a white residue which can be rinsed off with water. Wipe the grill dry with a clean cloth and apply Sheila Shine or WD-40 as a surface protectant.

2 . Rust removal with WD-40 or Sheila Shine:

Spray exterior stainless steel surfaces with WD-40 or Sheila Shine and wipe down with a dry cloth or paper towel until surface is free of rust. If there is significant rust or corrosion, use a Scotch-Brite scrubber.

Both of these products will act as a surface protectant and help resist smudges, stains, and rust.

Caution Although nitric acid (also called aqua fortis) can be effective for rust removal, it is a highly corrosive chemical. Because of the potential for injury or damage to your stainless steel, we do not recommend using nitric acid.

Cleaning the Interior of Your Grill

1. Thoroughly clean stains, food, and grime using a sponge or damp cloth with warm water and a mild dish soap. Use Fantastik or Formula 409 to remove heavier soil.
2. Thoroughly rinse all surfaces and dry them completely with a clean towel. Do not allow water to accumulate and puddle on stainless steel. Water from various sources such as garden hoses contains iron which will give the appearance of rusting on stainless steel. If allowed to stand for long periods of time on stainless steel, it will cause pitting.
3. The racks, flame tamers, and flavor bars can all be removed for cleaning and are dishwasher safe.

Burners

Spiders and small insects occasionally inhabit or make nests in the burner tubes, obstructing the gas flow. Sometimes this results in a type of fire in and around the gas tubes called "flashback". To reduce the risk of flashback, this procedure should be followed at least once a month or when your grill has not been used for an extended period of time.

IMPORTANT: Prior to starting this procedure, turn OFF all of the gas control knobs, shut off the fuel supply, and disconnect the fuel line.

The burners can be removed by removing the locking pins and lifting them out. The locking pins

are located under the grill toward the back. They are used to keep the burners in place during shipping and are not necessary to operate your grill. Remove burners from the grill by carefully lifting each burner up and away from the gas valve orifice.

Use a wire brush to clean the outer surface of each burner to remove food residue and dirt. Clean any clogged ports with a stiff wire such as an opened paper clip.

Inspect each burner for damage (cracks and holes). If any damage is found, discontinue grill usage until you replace the burner.

Upon reinstallation, inspect the gas valve orifices for cleanliness and condition and the location of the igniters. When you replace the burners, you do not need to replace the locking pins.

Cooking Grates

Use a solution equal parts detergent and hot water just as you would for any cooking equipment. A stiff wire brush or steel wool may also be helpful in removing grime and food deposits.



Note Do not use a wire brush or stainless steel on any other part of your grill or any other stainless steel surface except the cooking grates or the griddle!

Drip Pan

The full width drip pan will collect grease from the main grill area. The pan should be cleaned after every use to avoid the possibility of a grease fire. Be sure to allow the drip pan to cool prior to cleaning. You may clean the drip pan with a solution of warm soapy water. Make sure to rinse thoroughly to avoid staining.

Griddle

To prevent burns or injury, make sure the griddle is completely cool before cleaning.

The griddle is made from non-magnetic, 304 grade stainless steel. There are various stainless steel cleaners available. Always use the mildest cleaning procedure first, and always scrub in the direction of the grain. Use soapy water for most cleaning. A non-abrasive scrubber may also be helpful in removing grime and food deposits. Steel wool may be used for especially difficult spots. Wipe all areas dry before storing.

Steam Cleaning Your Grill

Steam cleaning the interior of your grill is very effective and will not void your warranty. Portable hand-held steam cleaners are inexpensive and do not require chemicals. You can steam clean all parts of your grill, including the burners. When you are finished, make sure you wipe all surfaces down.

If you spray the burners, ignite them and let them burn for about 10 minutes to prevent any water from accumulating inside them.

Covering Your Grill

When not in use and after cooling, cover your grill with our full length, zippered side canvas cover. (See your local Cal Flame dealer for details.) The cover will help protect your grill from detrimental effects of weather and environmental pollutants. Never put a cover on a hot grill. Allow the grill to cool before covering.

SEASONAL STORAGE

- If the appliance will be exposed to low temperatures or not used for an extended period (e.g., during winter), the refrigerator module must be emptied, cleaned, and stored indoors.
- Ensure the unit is completely dry before storage. Leave the door slightly open to prevent odor and mold growth.
- All water from the sink and faucet module must be completely drained to prevent freezing and potential damage to internal components.
- Failure to store the refrigerator module in a protected indoor environment during freezing conditions may affect performance and could lead to damage.

Problem: **Plugged orifice**

Solution: Unplug the orifice as follows:

- Remove cooking grills, flame tamer and grease tray.
- Remove burners from the bottom of the firebox by pulling the locking pin from beneath the burner peg using a standard screwdriver or needle nose pliers.
- Carefully lift each burner up and away from the gas orifice.
- Remove the orifice from the control valve.
- Gently clear any obstruction with a fine wire.
- Reinstall the orifice, reinstall the burners over the orifices, and seat each burner peg into position hole at the bottom ledge of the firebox.
- Replace cooking components and grease collectors.

If an obstruction is suspected in the control valve, contact your local dealer for assistance.

Problem: **Misalignment of Igniter on Burner**

Solution:

- Check for proper position of the electrode tip, which should be pointing forward towards the front of the burner and free of grease to allow proper sparking.
- The ignition wire should be connected firmly to the valve ignition device and electrode. Replace the ignition wire if it is frayed or cracked.
- With the gas supply closed and all control knobs set to the off position, check each position igniter individually for the presence of a spark at the electrode. Push each knob in fully and rotate it about 1/4 turn to the left (counter-clockwise) until you hear a loud click. The trigger hitting the strike block should produce a blue spark at the electrode tip. Return control knob to the off position before checking the next igniter.
- While the grill is still hot, wait for a minimum of five minutes before commencing re-ignition. (This allows accumulated gas fumes to clear.) If all checks / corrections have been made and the gas grill still fails to operate properly, contact your local Cal Flame dealer.

Problem: **Flashback**

Solution: When fire occurs in and around the burner tubes, immediately turn off gas at its source and turn the control knobs clockwise to the 'OFF' position. Wait until the grill has cooled off and then clean the burner tubes and burners as described on page of this manual.

Natural gas conversion

- When converted to natural gas, the NG gas label needs to be replaced with a ULPG gas label.
- Where a mobile appliance is to be connected to a fixed gas supply via a flexible hose connection, a restraining tether of adequate strength shall be fixed to the appliance and be suitable to be fixed to the wall within 50 mm of each connection point. The length of the tether shall not exceed 80% of the length of the hose assembly.
- WARNING! FAILURE TO HEED THESE WARNINGS COULD RESULT IN A FIRE OR EXPLOSION THAT COULD CAUSE SERIOUS BODILY INJURY, DEATH OR PROPERTY DAMAGE.
- Natural Gas Conversion must be performed by a QUALIFIED GAS TECHNICIAN ONLY. The QUALIFIED GAS TECHNICIAN should ensure compliance of local codes, including but not limited to, requirements and installation of grill regulator.
  DO NOT ATTEMPT TO CONVERT YOURSELF. Improper conversion could result in a gas leak which could cause a fire or explosion and cause serious bodily injury, death or property damage. Leaks due to improper conversion could occur immediately or slowly over time. If you hear any unusual noises or leaks, smell gas or unusual odors, or notice anything unusual with the operation of your gas appliance after the installation, immediately shut off the gas supply and discontinue use until the appliance is repaired by a QUALIFIED GAS TECHNICIAN.

Below parts are needed for natural gas conversion:
INCLUDED
#Natural gas orifices
#4" Water Column Regulator with Hose
#Tools
#6 mm Nut Driver
#6 mm Wrench
#Hex Key

Some of the following accessories need to be purchased by the customer at the local supplier:
#Quick Connector
#10 ft (3.0m) Natural Gas Hose

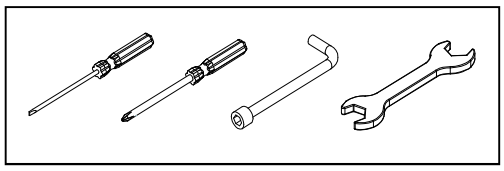

Tools will be needed for gas conversion

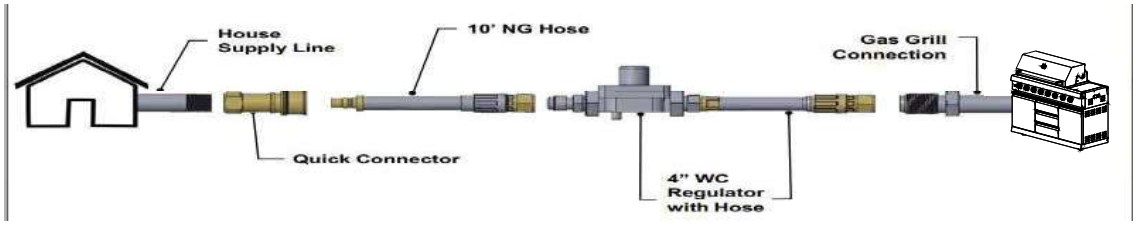

LG to NG step

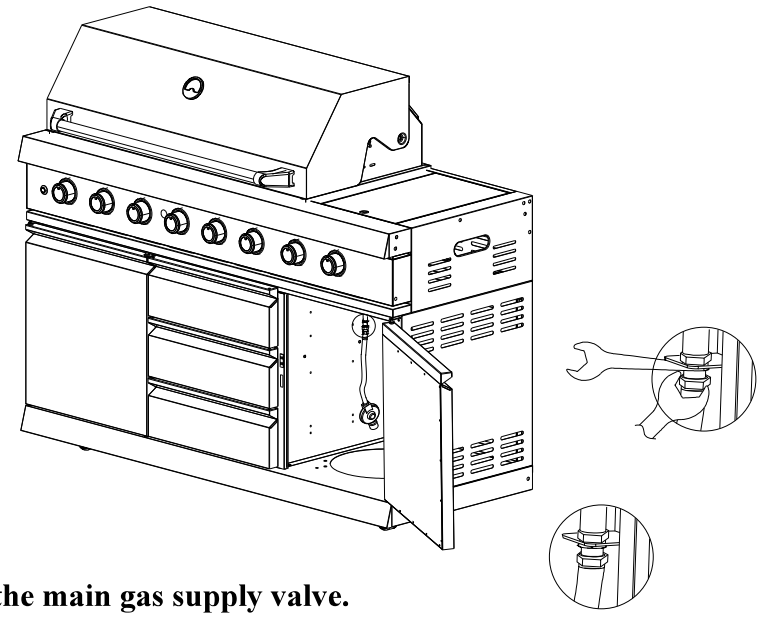

1. Turn off the main gas supply valve.
2. Disconnect LP gas fuel tank.
3. Turn off all burner control valves.
4. Remove the LP gas fuel tank from the grill cart.
5. Use an adjustable wrench to remove the LP regulator from the manifold.
6.Use an adjustable wrench to install the Natural gas regulator hose to the manifold and secure

The inlet is 3/8 SAE Flare with 5/8-18 UNF threads. The Natural Gas regulator thread is 1/2" BSP.

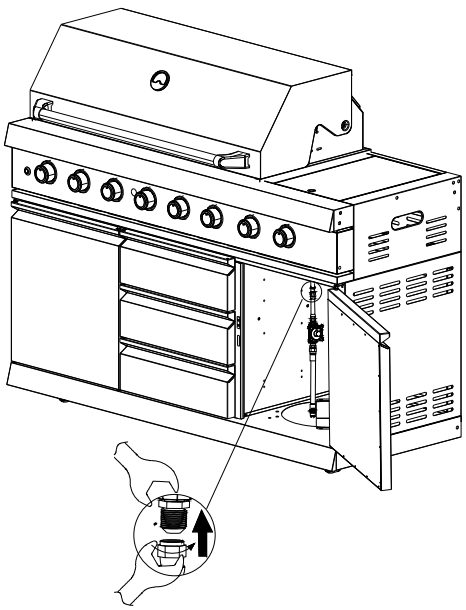

1.Connect the brass connector on one end of the 10 ft (3.0m) PVC flexible gas supply hose to the Natural gas pressure regulator

2.Connect the quick connector on the other end of the 10 ft (3.0 m) PVC flexible gas supply hose to the rigid Natural gas supply pipe.

3.Please do leak test after conversion

Natural gas conversion

Loosen the screws and remove the back burner guard

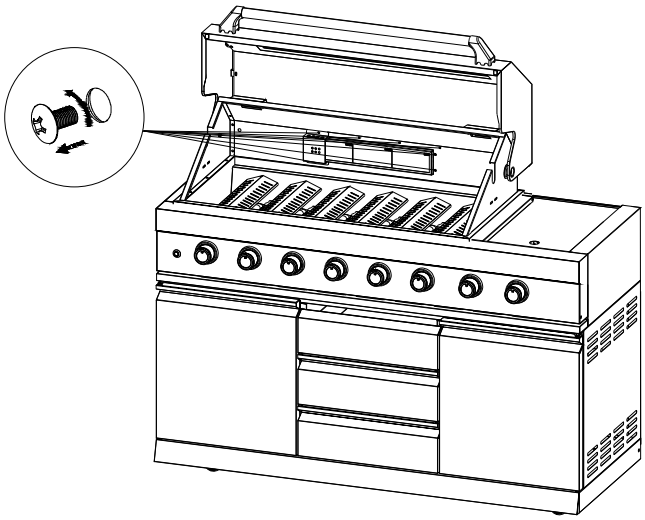

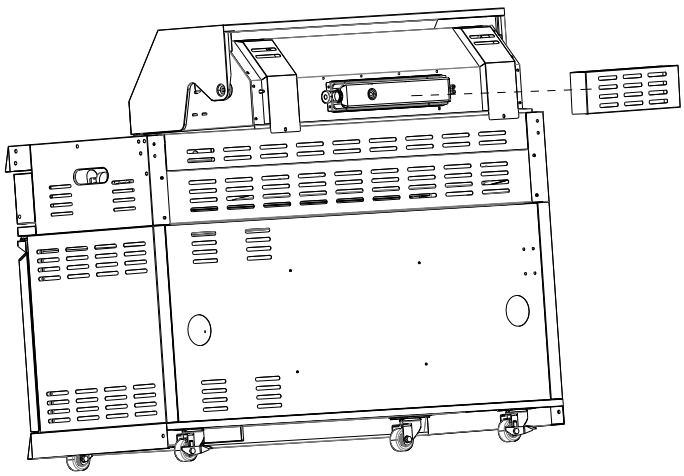

Remove the LP nozzle of the back burner from the back of the barbecue and replace it with an NG nozzle

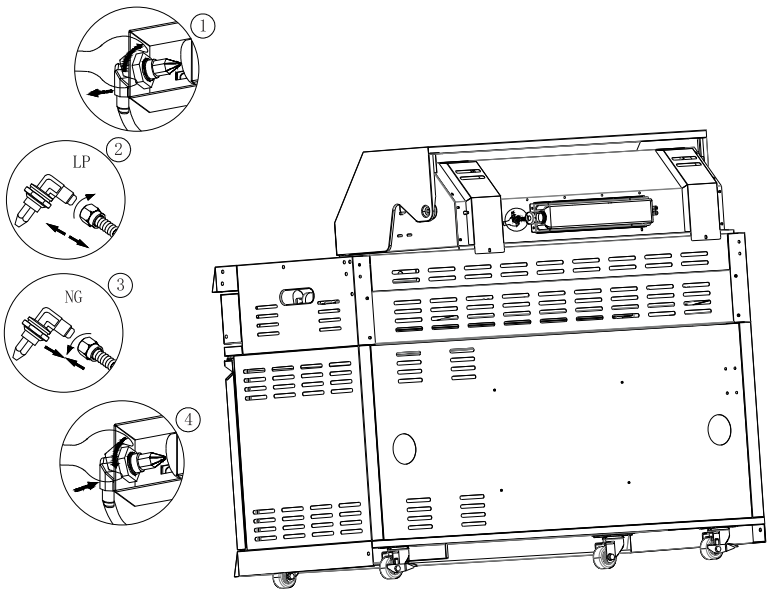

Take out the knobs and loosen the screws, take out the valve

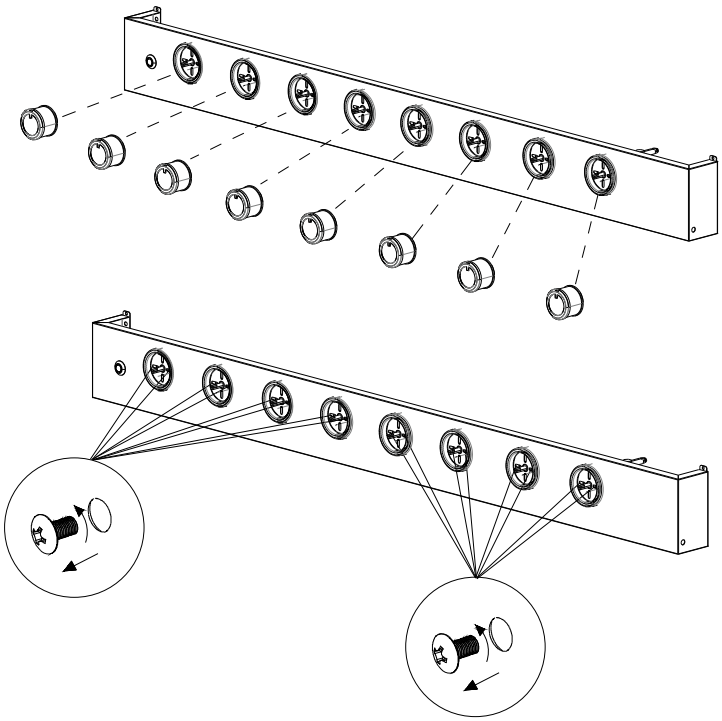

Use tools to loosen the adjust screw of the valve, adjust to in the same level.
One turn out (360°) from fully in.
(only for main burner and side burner)

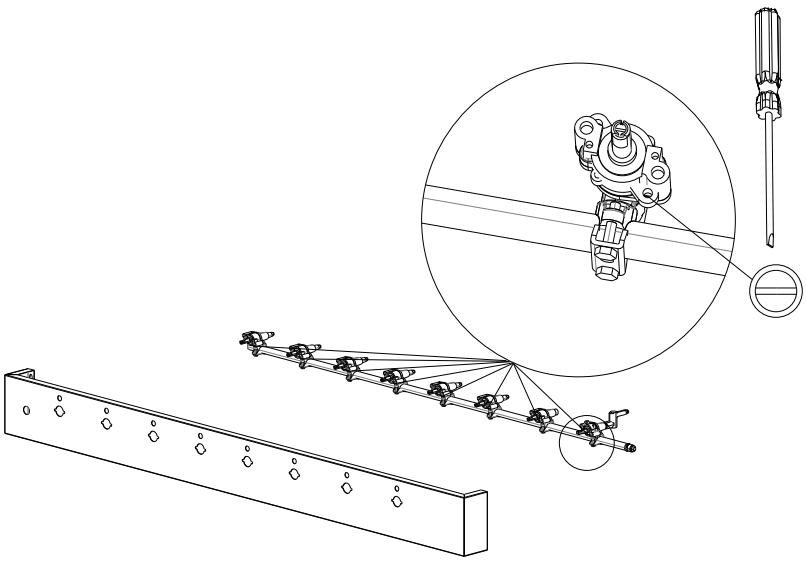



Natural gas conversion

Take out the drip tray

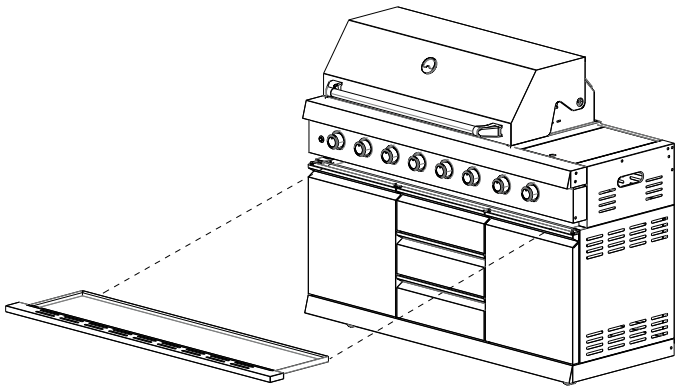

Loosen the screws of control panel

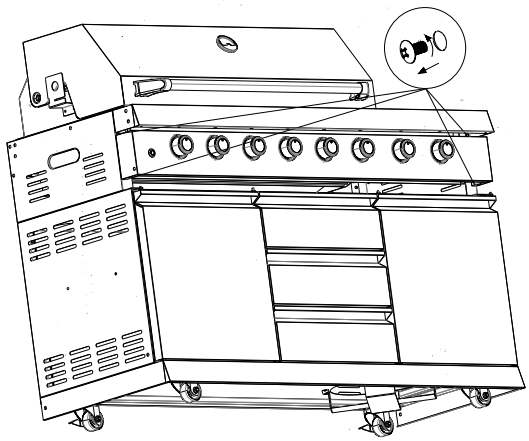

1.Take out the whole panel , loose the infrared burner hose
2.Unplug the ignition wire
3.Use tool loose the thermocouple gently
4.Take out the hose of gas connector
5.Pull out the light cord

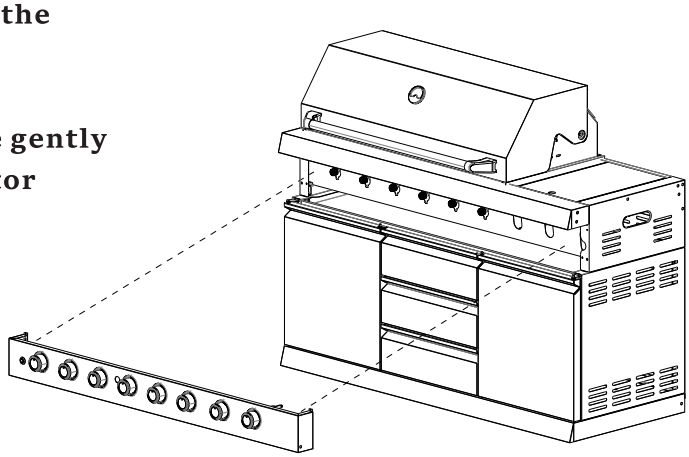

Natural gas conversion

Use wrench change the LP nozzle to
NG nozzle
(only for main burner and side burner)

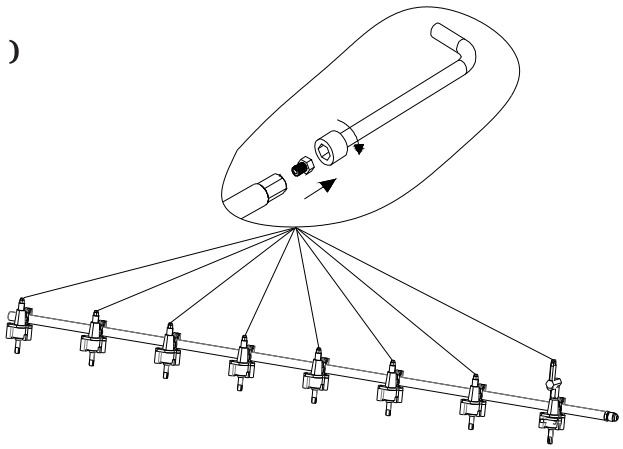

After that , assembly it back :

1.Insert the wire one by one Black for black color , red for red color
2.put the hose of gas connector in the right side connect infrared burner hose, use spanner to screw it use soap water to test leakage
3.Insert the wire
4.put the whole panel into the BBQ, screw back 4pcs screws
5.check all the burners one by one are fixed
6.Put back all the knobs.
7.Use soap water to test leakage before use, try to burn the burner again.

After conversion to natural gas, the product must be secured with a chain and cannot be moved.

A restraining chain or wire of adequate strength shall be fixed to the apploance and the wall with 50 mm of each connection point. The length of the chain or wire shall not exceed 80% of the length of the hose assembly.

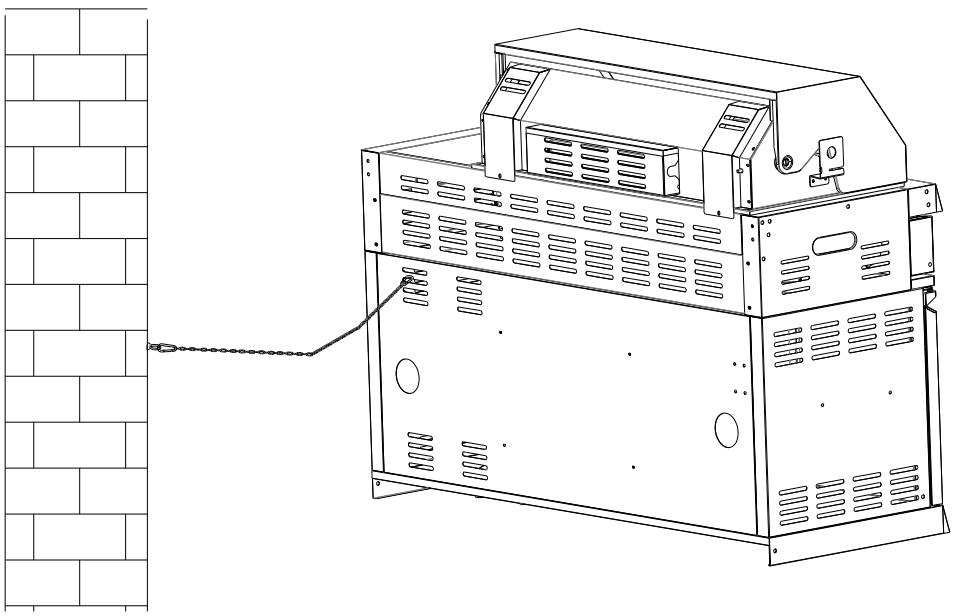

Warranty

What this limited warranty covers:
The Warranty coverage provided by Forno Appliances in this statement applies exclusively to the original Forno appliance ("Product") sold to the consumer ("Purchaser") by an authorized Forno dealer/distributor/retailer, purchased and installed in the United States or Canada, and which has always remained within the original country of purchase (the United States or Canada). Warranty coverage is activated on the date of the Product's original retail purchase and has a duration of two (2) years.
Warranty coverage is non-transferable. In the event of replacement of parts or of the entire product, the replacement Product (or parts) shall assume the remaining original Warranty activated with the original retail purchase document. This Warranty shall not be extended with respect to such replacement. Forno Appliances will repair or replace any component/part which fails or proves defective due to materials and/or workmanship within 2 years of the date of the original retail purchase and under conditions of ordinary residential, non-commercial use. Repair or replacement will be free of charge, including labor at standard rates and shipping expenses. Purchaser is responsible for making the Product reasonably accessible for service. Repair service must be performed by a Forno Authorized Service company during normal working hours.

Important
Retain proof of original purchase to establish warranty period. Forno's liability on any claim of any kind, with respect to the goods and/or services provided, shall in no event exceed the value of the goods or service or part there of which has given rise to the claim.

30-Day Cosmetic Warranty
The Purchaser must inspect the product at the time of delivery. Forno warrants that the Product is free from manufacturing defects in materials and workmanship for a period of thirty (30) days from date of the original retail purchase of the Product.

This coverage includes:
- Paint blemishes
- Chips
- Macroscopic finish defects

Cosmetic warranty does NOT cover:
- Issues resulting from incorrect transport, handling and/or installation (e.g.: dents, broken, warped or deformed structures or components, cracked or otherwise damaged glass components);
- Slight color variations on painted/enameled components;
- Differences caused by natural or artificial lighting, location or other analogous factors; > stains/corrosion/discoloration caused by external substances and/or environmental factors; > labor costs, display, floor, B-stock, out- of-box,"as is" appliances and demo units.

How to receive service
To receive warranty services, the Purchaser must contact the Forno Support department in order to determine the problem and the required service procedures. Troubleshooting with a customer service representative will be necessary before moving forward with the service. Model number, serial number and date of original retail purchase will be requested.

Warranty Exclusions: What Is Not Covered.
- Use of the Product in any non-residential, commercial application.
- Use of the Product for anything other than its intended purpose.
- Repair services provided by anyone other than a Forno Authorized Service agency.
- Damages or repair services to correct services provided by unauthorized parties or the use of unauthorized parts.
- Installation not in accordance with local/state/city/county fire codes, electrical codes, gas codes, plumbing codes, building codes, laws or regulations.
- Defects or damage due to improper storage of the Product.
- Defects, damage or missing parts on products sold out of the original factory packaging or from displays. > Service calls or repairs to correct an incorrect installation of the Product and/or related accessories.
- Replacement of parts/service calls to connect, convert or otherwise repair the electrical wiring and/or gas line in order to properly use the product.
- Replacement of parts/service calls to provide instructions and information on the use of the Product.
- Replacement of parts/service calls to correct issues arising from the product being used in a manner other than what is normal and customary for residential use.
- Replacement of parts/service calls due to wear and tear of components such as seals, knobs, pan supports, shelving, cutlery baskets, buttons, touch displays, scratched or broken ceramic-glass tops.
- Replacement of parts/service calls for lack of/improper maintenance, including but not limited to: build up of residues, stains, scratches, discoloration, corrosion.
- Defects and damages arising from accidents, alteration, misuse, abuse or improper installation.
- Defects and damages arising from Product transport, logistics and handling. Inspection of the product must be made at time of delivery. Following receipt and inspection, the selling dealer/delivery company must be notified of any issues arising from handling, transport and logistics.
- Defects and damages arising from external forces beyond the control of Forno Appliances, including but not limited to wind, rain, sand, fires, floods, mudslides, freezing temperatures, excessive moisture or extended exposure to humidity, power surges,
- Lightning, structural failures surrounding the appliance and other acts of God.
- Products whose serial number has been altered/damaged/tampered with. In no case shall Forno be held liable or responsible for damage to surrounding property, including furniture, cabinetry, flooring, panels, and other structures surrounding the Product. Forno is neither liable nor responsible for the Product if it is located in a remote area or an area where certified trained technicians are not reasonably available. Purchaser must bear any transportation and delivery costs of the Product to the nearest Authorized Service Center or the additional travel expenses of a certified trained technician

Warranty

THERE ARE NO EXPRESS WARRANTIES OTHER THAN THOSE LISTED AND DESCRIBED ABOVE, AND NO WARRANTIES, EITHER EXPRESS OR IMPLIED, INCLUDING, BUT NOT LIMITED TO, ANY IMPLIED WARRANTIES OF MERCHANTABILITY OR FITNESS FOR A PARTICULAR PURPOSE THAT SHALL APPLY AFTER THE EXPRESS WARRANTY PERIODS STATED ABOVE, AND NO OTHER EXPRESS WARRANTY OR GUARANTEE GIVEN BY ANY PERSON, FIRM OR CORPORATION WITH RESPECT TO THIS PRODUCT SHALL BE BINDING ON FORNO. FORNO SHALL NOT BE LIABLE FOR LOSS OF REVENUE OR PROFITS, FAILURE TO REALIZE SAVINGS OR OTHER BENEFITS, TIME AWAY FROM WORK, MEALS, LOSS OF FOOD OR BEVERAGES, TRAVELING OR HOTEL EXPENSES, EXPENSES TO RENT OR PURCHASE APPLIANCES, REMODELING/CONSTRUCTION EXPENSES IN EXCESS OF DIRECT DAMAGES WHICH ARE UNDENIABLY CAUSED EXCLUSIVELY BY FORNO OR ANY OTHER SPECIAL, INCIDENTAL OR CONSEQUENTIAL DAMAGES CAUSED BY THE USE, MISUSE OR INABILITY TO USE THIS PRODUCT, REGARDLESS OF THE LEGAL THEORY ON WHICH THE CLAIM IS BASED, AND EVEN IF FORNO HAS BEEN ADVISED OF THE POSSIBILITY OF SUCH DAMAGES. NOR SHALL RECOVERY OF ANY KIND AGAINST FORNO BE GREATER IN AMOUNT THAN THE PURCHASE PRICE OF THE PRODUCT SOLD BY FORNO AND CAUSING THE ALLEGED DAMAGE. WITHOUT PREJUDICE TO THE FOREGOING, PURCHASER ASSUMES ALL RISK AND LIABILITY FOR LOSS, DAMAGE OR INJURY TO PURCHASER AND PURCHASER'S PROPERTY AND TO OTHERS AND THEIR PROPERTY ARISING FROM THE USE, MISUSE, OR INABILITY TO USE THIS PRODUCT SOLD BY FORNO THAT IS NOT A DIRECT RESULT OF NEGLIGENCE ON THE PART OF FORNO THIS LIMITED WARRANTY SHALL NOT EXTEND TO ANYONE OTHER THAN THE ORIGINAL PURCHASER OF THIS PRODUCT, IS NON-TRANSFERABLE, AND STATES YOUR EXCLUSIVE REMEDY.



Correct Disposal of this product:
This marking indicates that this appliance should not be disposed with other household wastes. To prevent possible harm to the environment or human health from uncontrolled waste disposal, recycle it responsibly to promote the sustainable reuse of material resources.

For rotisseries kit

WARNING The side burner is not allowed to operate during operation of turnspit motors

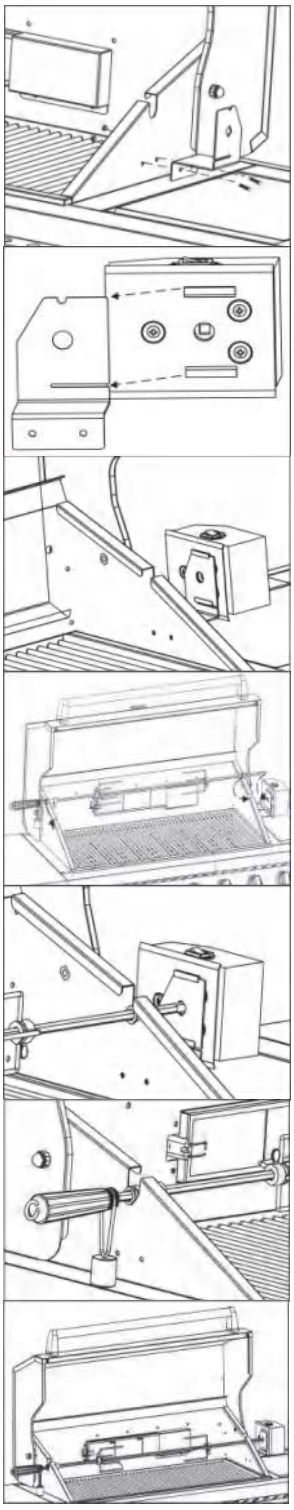

ASSEMBLY, INSTALLATION AND OPERATION INSTRUCTIONS.

Assembling and Attaching Rotisseries Kit to barbecue
1.Using 2 sets of bolts, nuts and washers provided, attach the bracket to the right side of the grill as shown in Fig 1 by passing two bolts through the bracket and then the outside of your grill. Place a washer on the end Of each bolt. Secure bolts with nuts. Take care not to over tighten the bolts. Repeat for right side.

2.Slid rotisseries Motor over right side Bracket.(Fig 2,3.)
3.Place the collar ,Spit Rod collar and meat prongs onto the rotisseries rod and attach it to the support on the right-hand side of the rotisseries bracket on the grill . The rod should turn smoothly. (Fig 4.)

4.Place washer onto the rotisseries rod, followed by the weight balance. Then attach the handle into the rotisseries rod. The weight balanceshould be positioned in the space between the washer and handle of the rod(Fig 5,6.)

5. Place the end of the rotisseries rod into the motor. Make sure rotisseries rod. is aligned properly with the motor. (Fig 7.)

Using the Rotisserie burner.

Plug the unit into an electrical outlet. Slide one of the meat prongs onto the rod (prongs toward the food). Center the food to be cooked on the rod,followed the thumbscrews. It may also be necessary to wrap food with butcher's string,(never use nylon or plastic string) to secure loose portions.

Once the food is secure, insert the pointed end of the rotisseries rod into the motor assembly and rest the other end on the support on the right hand side of the grill.
If needed remove the cooking grates for more room.
Turn the power switch to the "No" Position to start the rotisseries motor.
Turn the power switch off after cooking
Notes: When using the rotisseries burner, make sure all main burners are off.
When using the rotisseries burner, it is not recommended to use Side burners as injury may result from burning.

CARE AND MAINTENANCE.

Turn off , unplug and remove the rotisserie kits when not in use.
After using, clean all metal parts using a dry cloth to avoid rusting.
Do not immerse any parts in water. Store in a dry place.

TROUBLESHOOTING

If the rod is not rotating at a constant speed, reposition the meat on the forks and rod to adjust the weight so that it is balanced.
The rod also can be balanced by adjusting the Counterweight.

FORNO

Alta Qualita

FOR
FAST SUPPORT
EMAIL AT **INFO@FORNO.CA**

Customer Support: Call 1-866-231-8893 or email: info@forno.ca