PHILIPS

EasyKey

6000 series

Smart Lever Door Lock

DDL603E

User manual

Register your product(s) to get support from below link:

www. philips.com/support

Contents

1 Important info 02

Security
Caution
Disposal of used products and batteries

2 Installation 03

Packaging list
Exploded views
Before installation
Instructions

3 Get to know your EasyKey 09

Front escutcheon
Rear escutcheon

4 How to set up your EasyKey 10

-Before setup
-Modify master PIN code
-User settings
-Deletion of user information
-System settings
-Extended functions
-System query
-Local query
-App binding instruction

5 How to use your EasyKey 17

Unlocking

Unlock from outside
-With Key tag
-With fingerprint
-With PIN code

Unlock from inside
-With handle

Locking

-Lock from outside
-Lock from inside

Interior lockout
Mechanical key opening

6 Other functions 20

Safehandle function
Restore to factory settings
One-key mute mode

7 Meaning and use of indicators 21

Door lock status indicator
Mute mode indicator
System lockup indicator

8 Troubleshooting 23

Alerts on Philips Easykey
How to charge Philips Easykey in an emergency
How to replace batteries

1.Important info

Security

◆Before using Philips EasyKey, please read and understand all instructions. Damage caused by non-compliance with the instructions will not be covered by warranty.

◆Use only the manufacturer-specified accessories/components.

◆Use only the alkaline batteries the product is equipped with, or use the same specification type of alkaline batteries.

◆Do not forcibly disassemble this product to avoid triggering an alarm or damaging the product.

◆Do not scrape the fingerprint sensor with sharp objects, otherwise it may cause permanent damage.

◆Do not expose products to environments where there is water leakage or splashing.

◆Do not expose the product to corrosive substances to prevent damaging the protective cover.

◆Do not hang objects on the handle, in case it might affect the normal use of the lock.

◆Pleae clean the product with a soft cloth.

◆Do not remove the battery during setting up and operating.

◆Please let a professional technician to install the door lock and follow the installation guidelines provided.Do not disassemble the lock by yourself. Keep the relevant sealed stickers properly. Do not easily disclose the password information.

◆Please modify the default master PIN code immediately after installation and configuration, and keep the mechanical key properly.

◆Please replace all the batteries immediately if there is a low battery alarm. Please make sure to correctly match the poles (+/-) when installing the batteries.

Caution

◆Do not place the battery near a fire to avoid an explosion.

◆Do not use any emergency power supply that does not meet the safety requirements to power up the product.

◆Do not connect the 2 poles of the batteries with metals to avoid short circuit which may lead to an explosion.

◆Please make sure any component replacement is executed by Philips, Philips authorized service center or professional technicians.

◆Do not use accessories or parts that have been produced by other manufacturers or have not been specifically recommended by Philips. Use of such accessories and parts may void your warranty.

Disposal of used products and batteries

◆You can have your locks reclaimed at Philips authorized service centers. You will receive corresponding compensation if your products meet our conditions.

◆Please learn by yourself the local electronic product classification and collection system.

◆Please abide by local regulations and do not mix used products with ordinary domestic waste.

◆Proper disposal of used products can help to avoid potential negative impacts on the environment and human health.

◆This product contains batteries which can not be disposed of together with domestic waste.

◆Please learn the local regulations concerning battery classification and collection by yourself. Proper disposal of used batteries can help to avoid negative impacts on environment and human health.

2.Installation

Packaging list

This packaging list is for reference only. Please refer to the actual packaging contents.

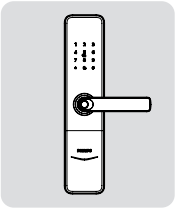

①Front escutcheon with silicone pad

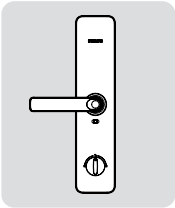

②Rear escutcheon with silicone pad

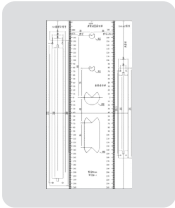

③Drilling template

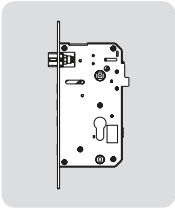

④Mortise

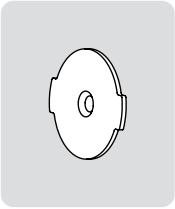

⑤Mounting plate

⑥User manual

⑦Warranty card

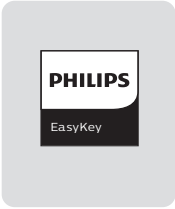

⑧Quality certificate

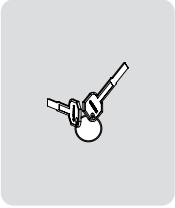

⑨Mechanical key

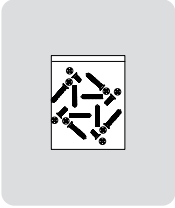

⑩Installation kit

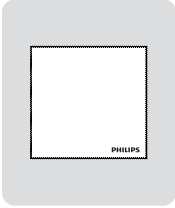

⑪Cleaning pad

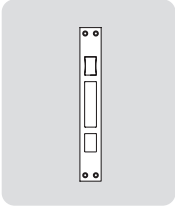

⑫Strike

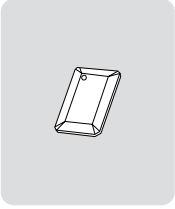

⑬Key tag

Exploded views

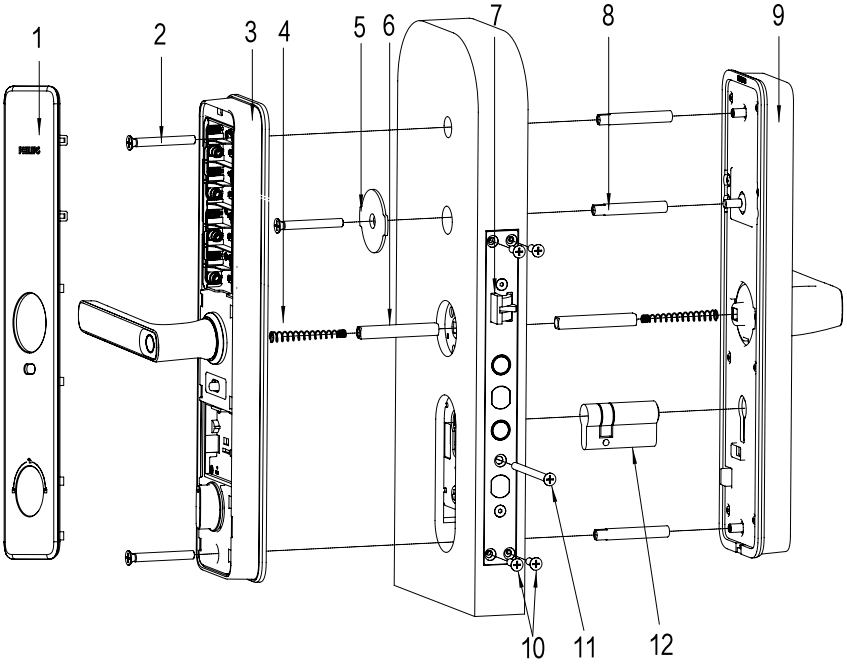

1.Rear cover x1
2.Anchor screw x3
3.Rear escutcheon x1
4.Compressed spring x2
5.Mounting plate x1
6.Square shaft x2
7.Mortise x1
8.Threaded pipe x3
9.Front escutcheon x1
10.Anchor screw of mortise x4
11.Anchor screw of lock cylinder x1
12.Lock cylinder x1

Before installation

Step 1 | Confirm door swing direction

This product is suitable for the door going in four directions: left outward, right inward, right outward and left inward.

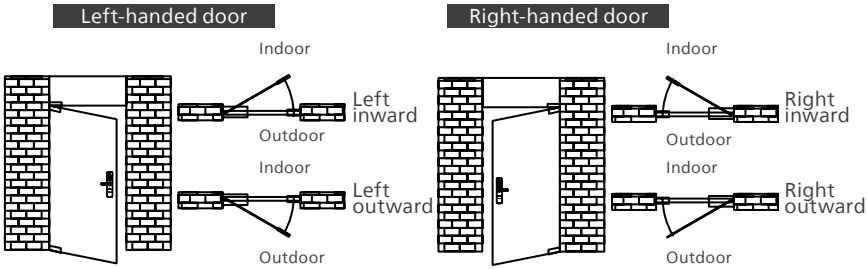

Step 2 | Change the front handle direction

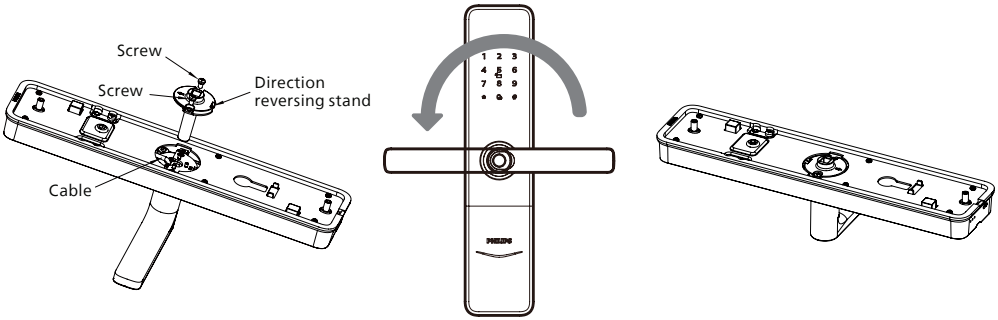

1. Unscrew two screws and remove direction reversing stand and cover.
2. Rotate the handle to 180 degrees for optimal placement.
3. Make sure the cable is in the same position as the one showed in the picture one. Then put the direction reversing stand back and tighten the screws.

Change the rear handle direction

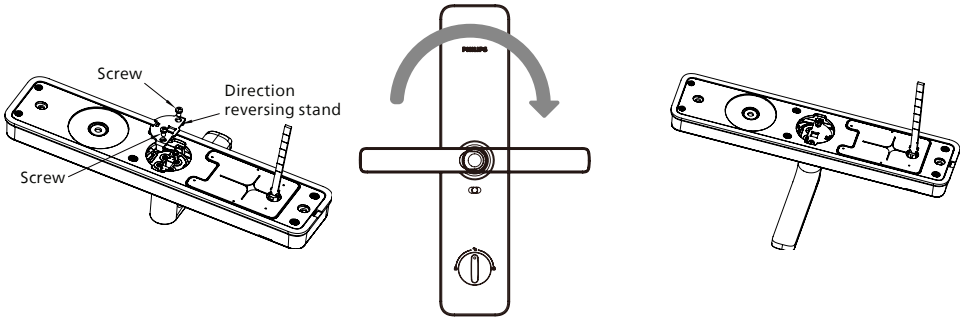

1. Unscrew two screws and remove the direction reversing stand.
2. Rotate the handle to 180 degrees for optimal placement.
3. Put the direction reversing stand back and tighten the screws.

⚠ Attention

1. Please choose the proper installation kit to suit your door thickness.The default installation kit is applicable for a door thickness of 60-90mm. If your door thickness does not within this range, please feel free to contact us.
2. The bar shall be cut to an optimal length as per the thickness of door.

Step 3 | Change the direction of latch bolt

Change the direction of the latch bolt to suit your door swing direction. If the slant of the latch bolt faces the outside door, then it is the inward opening door. If the slant of the latch bolt faces the inside door, then it is the outward opening door.

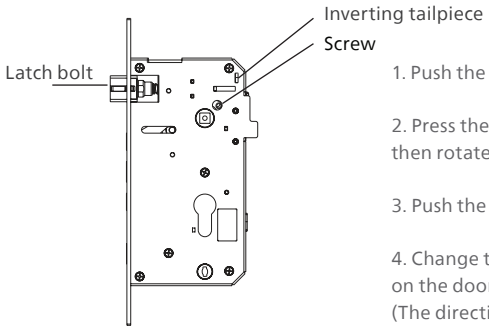

1. Push the inverting tailpiece to the top.

2. Press the latch bolt down to the mortise surface, then rotate it 180 degrees and pull it out.

3. Push the tailpiece to the bottom.

4. Change the direction of the directional screw based on the door swing direction.
(The directional screw must be installed on the interior door that is equipped with rear escutcheon)

Instructions

The following instructions only apply to right-handed doors. For left-handed doors, please read [Before installation] carefully and make necessary adjustments.

1 Mark the hole for drilling with drilling template and drill the marked hole, then mount the mortise into the hole and fasten it with anchor screw.

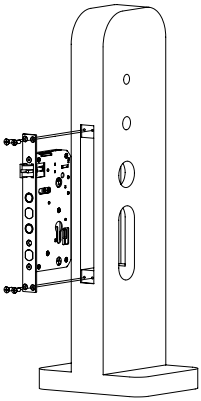

⚠ Attention

The mortise cable should through the hole showed on the picture.

2 Insert the gourd lock cylinder into the corresponding position and fasten it with screw.

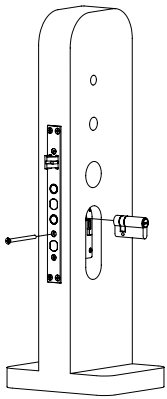

3 Install the threaded pipes and place the compressed spring and square shaft into the hole of the lever.

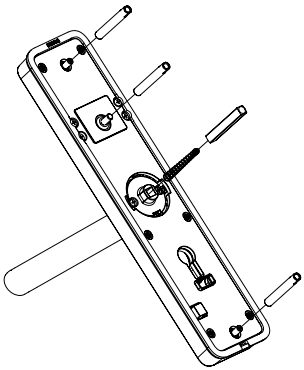

4 Pull the connector through the hole and align the square shaft and threaded pipes on the front escutcheon with the holes.

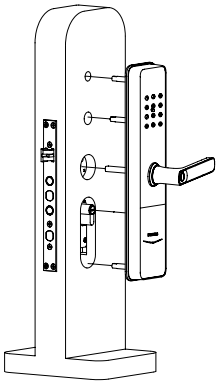

⚠ Attention

Anti-dismantling component should be flush against the door or an alert would be triggered when Philips easykey is electrified.

5 Make sure the mounting plate is installed as shown in the picture and fasten it with screw.

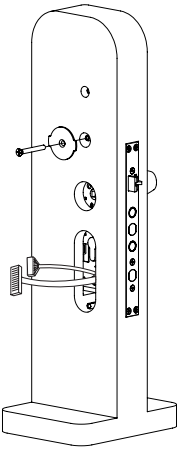

6 Put the compressed spring and square shaft to the rear escutcheon. Align the square shaft and bar with the hole on the mortise. Connect the connector of front escutcheon and mortise to the connector port of rear escutcheon and hide the extra connector in the door hole. Then fasten the rear escutcheon with screws.

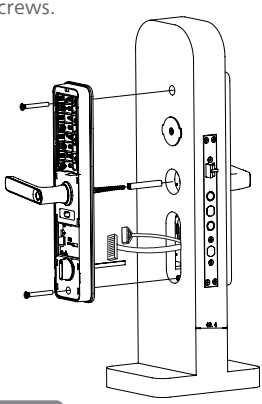

⚠ Attention

The bar can be cut to an optimal length based on door thickness and then insert it into the hole on the mortise.

7 Install four AA batteries followed by rear cover. Then, test the locking and unlocking function and repeat these steps if required.

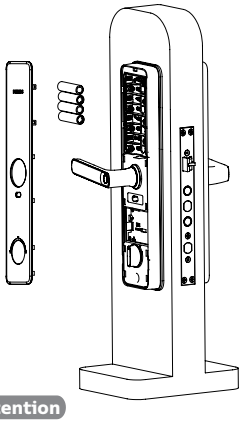

⚠ Attention

Please make sure the rear cover is firmly fastened in the installation process, preventing it from falling when closing door.

3.Get to know your EasyKey

Front escutcheon

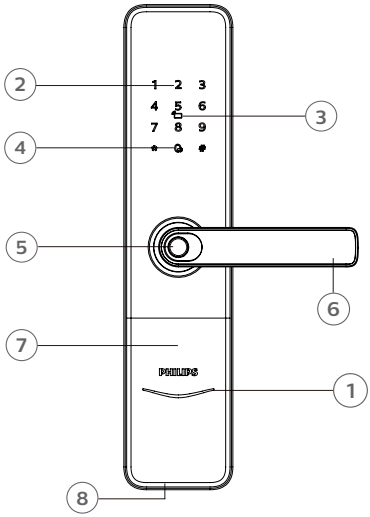

1	Door status indicator
2	Keypad
3	Keytag reader
4	Mute key
5	Fingerprint sensor
6	Handle
7	Keyhole
8	USB interface

Rear escutcheon

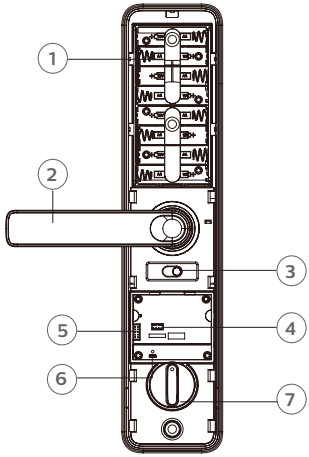

1	Battery cover
2	Handle
3	Safehandle switch
4	Extended moudle interface
5	Burning port
6	Reset button (Restore to default settings)
7	Rotary knob

4.How to set up your EasyKey

Before setup

◆Philips EasyKey comes with two modes: General mode and Dual verification mode

General mode	Dual verification mode
Unlock with any registered identity information	Unlock with the combination of two different verifications among PIN code, Key tag and fingerprint.

⚠ Attention

Fingerprint and Key tag are optional. Actual unlocking methods may vary depending on the feature of product, please refer to the actual product.

◆ User code

If you want to delete a specific user's information, you could delete the related user code in the system.

◆You can record the user information in the following table for future query.

User code	Name	Fingerprint	PIN Code	Key tag
00				
01				
02				
03				
04				
05				
06				
07				
08				
09				

◆Icon annotation

Master PIN code | One-time user PIN code | User PIN code | User code 00-19 | User code 00-99 | Fingerprint | # key | * key | Keytag

⚠ Attention

1.Press [*] key to return to the previous menu.
2. The default master PIN code is 12345678.

◆How to enter master mode:

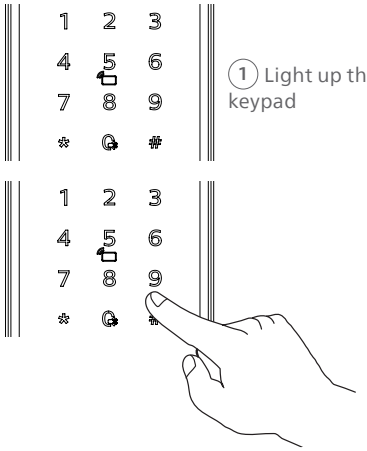

① Light up the keypad

② Enter [#] before you enter any other numbers, then enter master PIN code and confirm with [#].

Modify master PIN code

Press [#], enter master PIN code and confirm with [#].

Press [1] to modify master PIN code.

Enter the new master PIN code and confirm with [#].Re-enter the new master PIN code and confirm with [#].After hearing a voice prompt of "Succeeded", press [*] several times until you exit master mode.

User settings

Register a user PIN code

Press [#], enter master PIN code and confirm with [#].

Press [2] to enter user registration, then press [1] to register a new user PIN code, which will be automatically numbered and broadcasted by the system.

Enter a user PIN code of 6 to 12 digits,and confirm with [#]. Then re-enter the user PIN code and confirm with [#]. After hearing a voice prompt of "Succeeded", press [*] several times until you exit master mode.

Register a one-time user PIN code

Press [#], enter master PIN code and confirm with [#].

Enter [2] to enter user settings, then enter [2] again to add a one-time PIN code.

Enter a one-time user PIN code of 6 to 12 digits and confirm with [#]. Re-enter the one-time user PIN code and confirm with [#]. After hearing a voice prompt of "Succeeded", press [*] several times until you exit master mode.

Register a fingerprint

Press [#], enter master PIN code and confirm with [#].

Press [2] to enter user settings, then press [3] to enter fingerprint registration. The system will automatically number the fingerprint and broadcast the number.

Place your finger on the fingerprint sensor. When you hear a voice prompt of “Move your finger and put on again", lift your finger and repeat the process. After you hear a voice prompt of “Succeeded", keep pressing [*] until you finally exit the master mode.

Register a keytag

Press [#], enter master PIN code and confirm with [#].

Enter [2] to enter user registration and enter [4] to add a key tag, then the system will automatically number it and generate a voice prompt.

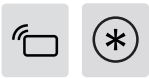

Hold the key tag on the reader until you hear a “Dong” sound. When hearing a voice prompt of “Succeeded”, keep pressing [*] until you finally exit the master mode.

Deletion of user information

Delete a user PIN code

Press [#], enter master PIN code and confirm with [#].

Press [3] to enter user deletion, then press [1] to enter user PIN code deletion. Press [1] again to delete a single user PIN code.

Enter a two-digit user code (from 00 to 19) which a PIN code is to be deleted and then confirm with [#]. After hearing a voice prompt of “Succeeded”, keep pressing [*] until you finally exit the master mode.

Delete all user PIN codes

Press [#], enter master PIN code and confirm with [#].

Press [3] to enter user deletion, then press [1] to enter user PIN code deletion. Press [2] to delete all user PIN codes. After hearing a voice prompt of "Succeeded", press [*] several times until you exit master mode.

Delete a one-time PIN code

Press [#], enter master PIN code and confirm with [#].

Enter [3] to enter user record deletion and enter [2] to delete one-time PIN code.

After hearing a voice prompt of “Succeeded”, press [*] several times until you exit master mode.

Delete a fingerprint

Press [#], enter master PIN code and confirm with [#].

Enter [3] to enter user record deletion and enter [3] to enter fingerprint deletion, then enter [1] to delete a single fingerprint.

Enter a two-digit user code (from 00 to 99) which a fingerprint is to be deleted and then confirm with [#]. After hearing a voice prompt of “Succeeded”,
keep pressing [*] until you finally exit the master mode.

Delete all fingerprints

Press [#], enter master PIN code and confirm with [#].

Press [3] to enter user deletion, then press [3] again to enter fingerprint deletion. Press [2] to delete all fingerprints. After hearing a voice prompt of "Succeeded", press [*] several times until you exit master mode.

Delete a keytag

Press [#], enter master PIN code and confirm with [#].

Enter [3] to enter the deletion of user information and enter [4] to enter the deletion of keytag, then enter [1] to delete a single keytag. Enter a two-digit user code (from 00-99) which a key tag is to be deleted or place a keytag to be deleted against the keytag reader. After hearing a voice prompt of “Succeeded", keep pressing [*] until you finally exit the master mode.

Delete all keytags

Press [#], enter master PIN code and confirm with [#].

Press [3] to enter the deletion of user information and enter [4] to enter the deletion of keytag, then enter [2] to delete all keytags. After hearing a voice prompt of “Succeeded", keep pressing [*] until you finally exit the master mode.

System initialization

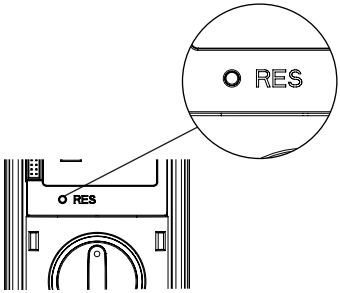

Remove the battery cover, then double press the [RES] hole with a sharp object. When you hear a voice prompt of “Restoring to default settings", it means that all user information is emptied.

System settings

Language settings

Press [#], enter master PIN code and confirm with [#].

Press [4] to enter system settings, then press [1] to enter language settings.

For Chinese, press [1]; For English, press [2]; For Spanish, press [3]; For Russian, press [4]; For Arabic, press [5]. After hearing a voice prompt of “Succeeded”, press [*] until you finally exit the master mode.

Attention

The default language is English.

Volume settings

Press [#], enter master PIN code and confirm with [#].

Press [4] to enter system settings, then press [2] to enter volume settings.

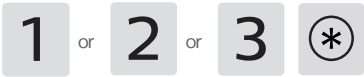

Choose the volume as needed: For high volume, press [1]; for low volume, press [2]; for mute mode, press [3]. After hearing a voice prompt of “Succeeded”, keep pressing [*] until you finally exit the master mode.

Attention

The default volume is “high volume”.

Switch to dual verification mode

Press [#], enter master PIN code and confirm with [#].

Enter [4] to go into system settings, then enter [3] to go into dual verification mode.

For single verification, press [1]; for dual verification, press [2]. After hearing a voice prompt of "Succeeded", press [*] several times until you exit master mode.

Extended functions

Enter [#] and enter master PIN code, then confirm with [#].

Enter [5] to go into extended functions.

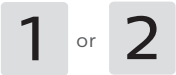

Enter [1] to join a network. Enter [2] to exit a network. Before entering into the extended function settings, please download and open the TmallGenie APP on your mobile phone.

Attention

Extended functions are applicable to Wi-Fi enabled product. Please follow the below instructions to connect to Wi-Fi network.

System Query

Security code query

Press [#], enter master PIN code and confirm with [#].

Enter [6] to go into system query, then enter [1] to check the security code and the system will automatically broadcast the product series number.

Attention

Directly enter 400# to go into system query.

Local Query

Press [#], enter master PIN code and confirm with [#].

Press [6] to enter system query, then press [2] to get the software version automatically broadcasted.

Attention

Directly enter 114# to go into the local query.

App binding instruction

Attention

Due to the functions vary in different models, please consult the official authorized seller to confirm whether the product(s) you purchased support(s) networking.

Download the App

Please scan the QR code above to download the App and install it.

Lock pairing

1. For Bluetooth smart door lock(s)

① Make sure the door lock terminal has been installed with batteries or connected to the power supply.

② Sign in to the App, click to “Add a device” on the Homepage, choose [Bluetooth Smart Door Lock] to enter the pairing page, then complete the pairing process according to the App prompts.

2. For Wi-Fi smart door lock(s), facial recognition smart door lock(s) and video smart door lock(s)

① Make sure the door lock terminal has been installed with batteries or connected to the power supply.

② Click the [#] on the smart door lock terminal and enter the master PIN code, re-click the [#] to enter master mode, press [5], then press[1] to enter the Networking Distribution Mode, then you will hear a voice prompt of “Connecting, please wait a moment”.

③ Sign in to the App, click to “Add a device” on the Homepage, choose [Wi-Fi lock/Facial recognition lock/Video lock] to enter the pairing page, then complete the pairing process according to the App prompts.

Attention

The door locks only support connecting to the 2.4Ghz Wi-Fi router (5Ghz Wi-Fi is not supported). Please make sure that the visual distance between the router and the door lock terminal is less than 10 meters, otherwise, the signal might be poor.

5.How to use your EasyKey

Unlocking | Unlock from outside

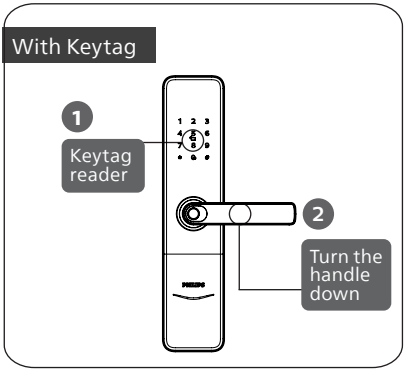

①Place the registered keytag against the keytag reader.
②When you hear a voice prompt of “Door opened”, turn the handle down to unlock the door.

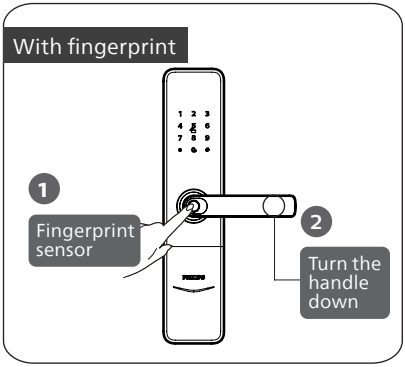

①Place the registered finger on the fingerprint sensor.
②When you hear a voice prompt of “Door opened”, turn the handle down to unlock the door.

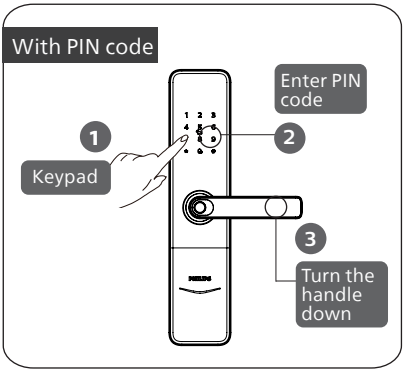

①Touch the digit input area to light up the keypad.
② Enter the registered PIN code and confirm with [#].
③After hearing a voice prompt of “Door opened”, turn the handle down to unlock the door.

Unlocking | Unlock from inside

With handle

Philips EasyKey employs indoor fast opening mortise, allowing you to directly press down the handle to unlock the door.

⚠ Attention

When opening the door from inside, please make sure the safe handle switch is toggled to green scale and the safe handle function is disabled.

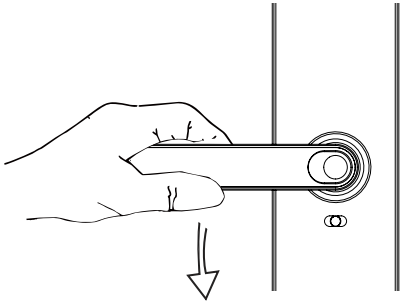

Locking | Lock from outside/inside

Lock from outside

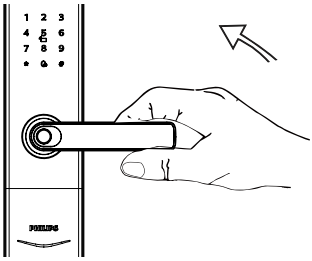

After the door is closed, lifting the handle can have the latch bolt poped up, locking the door.

Lock from inside

After the door is closed, lifting the handle can have the latch bolt poped up, locking the door.

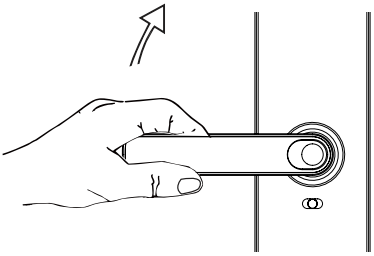

Interior lockout

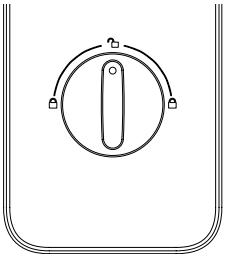

After the door is locked, turning the rotary knob to the "lock" icon at the left or right side of the rotary knob as showed in the left image can enable the inside deadlock.
Twisting the rotary knob to the "unlock" icon can release the inside deadlock mode.

Mechanical key opening

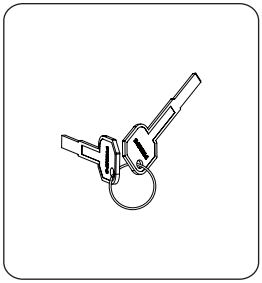

1 Find the mechanical key in the Philips Easykey box.

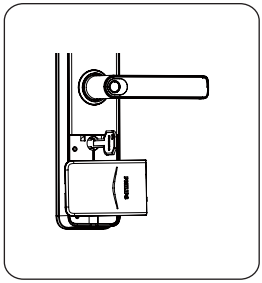

2 Open the mechanical key cover. Lift it up and rotate it 90°.

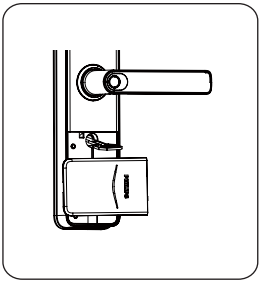

3 Insert the mechanical key into the keyhole and make sure it remains in the horizontal position as shown in the image. Rotate it clockwise or counter clockwise by around a full circle and a half to unlock the door.

⚠ Attention

It is recommended not to use mechanical keys daily unless there is an emergency, such as the dead battery, forgotten PIN code or system malfunction.

6.Other functions

Safehandle function

Function:
When safe handle function is enabled, you could lock up the handle from inside, and doors can't be unlocked from inside.

How to use:
1. Enable safe handle function: Toggle the switch to red scale.

2. Disable safe handle function: Toggle the switch to green scale.

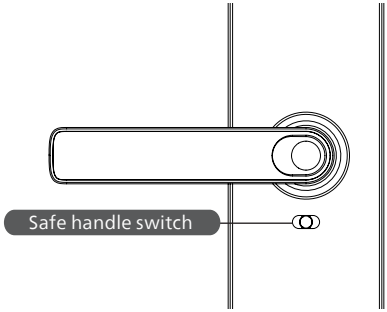

Restore to factory settings

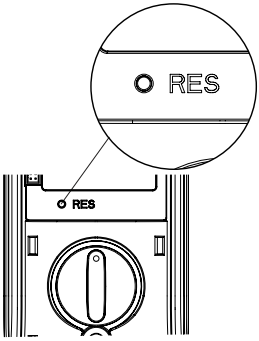

Function:
Empty all user information and restore to factory settings.

How to use:
Double click the [RES] button with a sharp object. Then the door lock will be restored to factory settings and all the user information will be emptied.

One-key mute mode

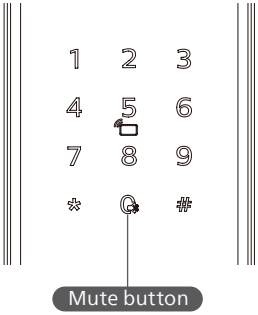

Function:
Turning off the voice guide with only one key, which is applicable to the scenes where you don't want to disturb your families.

How to use:
1. Mute: When the system is awake, long press the mute button for 2 seconds to enter one-time mute mode. The button will glow white.

2. Unmute: When the system is awake, long press the mute button for 2 seconds to restore the voice guide. The button will glow white.

7.Meaning and use of indicators

Lock status indicator

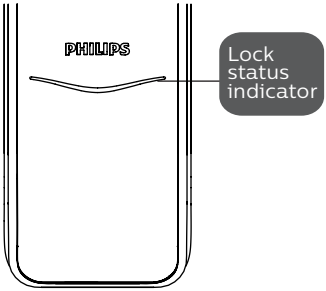

The meanings of different light colors

Blue: After the system wakes up, the light will glow blue, indicating that you can operate the lock.

Green: After the door is unlocked, the light will glow green, indicating that the door is open.

Red: After the door is locked, the light will glow red, indicating that the door is closed.

Mute mode indicator

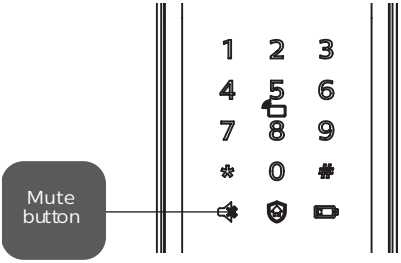

The meanings of light colors:

White: The mute mode is on or off.

System lockup indicator

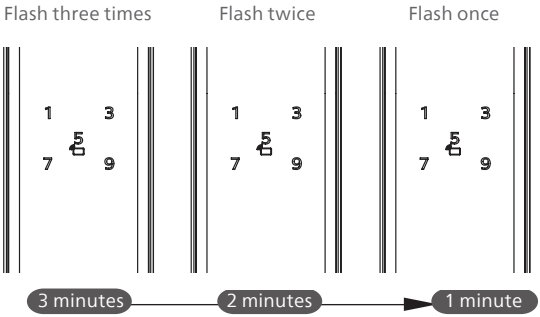

If there are consecutive incorrect inputs of any of the fingerprint, PIN code, or key tag 5 times within 5 minutes, the system will lock up for 3 minutes.

⚠ Attention

Only when waking up the outside escutcheon or verifying the identity of the user would the numbers appear.

8.Troubleshooting

Alerts on Philips Easykey

Low battery alert, reminding you to replace the batteries in time

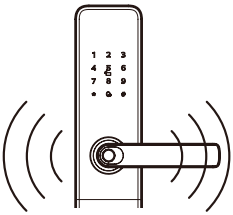

Way to trigger: When the system wakes up, it will automatically check the battery voltage. If the voltage is too low, then an alert will be triggered to remind you to replace the batteries.

Way to be alerted: A voice prompt of"Low battery voltage, please replace all batteries" will be given when unlocking the door.

Way to turn off: The alert will be automatically turned off.

Anti-dismantling alert

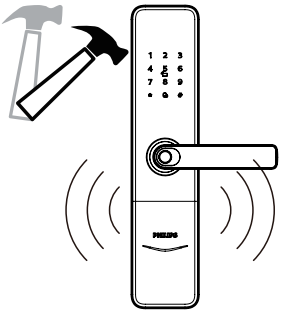

Way to trigger: The front escutcheon is pried open and there is a gap between the door frame and the door lock.

Way to be alerted: Repeat alerts

Way to turn off: Alert will be turned off automatically or close after verifying the identity of the users. And the normal way to unlock the door from inside or outside could also turn off the alert.

How to charge Philips Easykey in an emergency

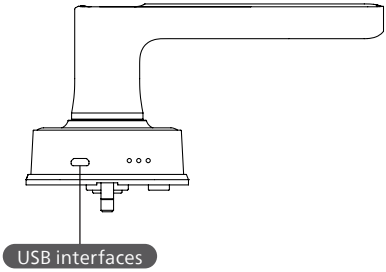

When the battery voltage is low and the door cannot be opened from outside, you can power up the lock by plugging 5V power bank into the micro USB. After the door is unlocked, please replace the batteries instantly.

How to replace batteries

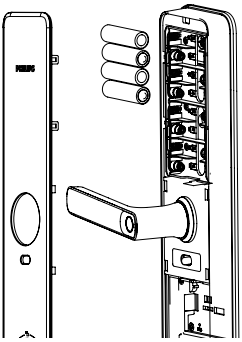

To keep the batteries running longer and save you from replacing the batteries repeatedly, Philips Easykey is powered by four AA batteries and can contain eight batteries at the same time. Remove the batteries by loosening the buckles on the lower part of rear escutcheon and draging the rear escutcheon upward.

Philips and the Philips Shield Emblem are registered trademarks of Koninklijke Philips N.V. and are used under license. This product has been manufactured by and is sold under the responsibility of Shenzhen Conex Intelligent Technology Co., Ltd., and Shenzhen Conex Intelligent Technology Co., Ltd. is the warrantor in relation to this product.