Form No. 3467-309 Rev A

Fuel Pickup with Screen Kit

Z Master 2000 and 4000 Series Units

Model No. 161-6806

Installation Instructions

Installation

1

Preparing the Machine

No Parts Required

Procedure

1. Park the machine on a level surface.
2. Disengage the blade-control switch.
3. Move the motion-control levers outward to the NEUTRAL-LOCK position.
4. Engage the parking brake.
5. Shut off the engine and remove the key.
6. Wait for machine parts to cool.

2

Installing the Kit

Parts needed for this procedure:

1	Bushing
1	Rubber-compatible lubricant
1	Fuel pickup with screen

Procedure

Note: Discard all removed parts unless otherwise indicated.

1. Rotate the seat forward and disconnect the seat-switch wire harness. Lay the seat on the deck.

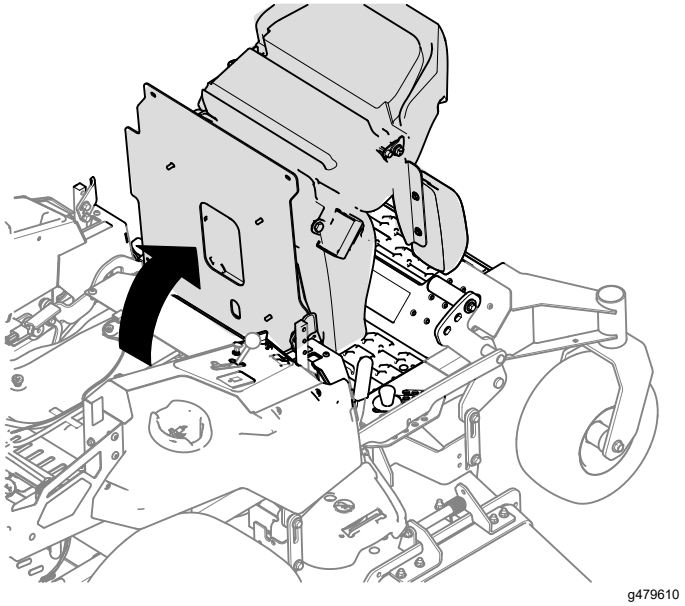

g479610

Figure 1

© 2024—The Toro® Company
8111 Lyndale Avenue South
Bloomington, MN 55420

Register at www.Toro.com.

Original Instructions (EN)
Printed in the USA
All Rights Reserved

3467-309

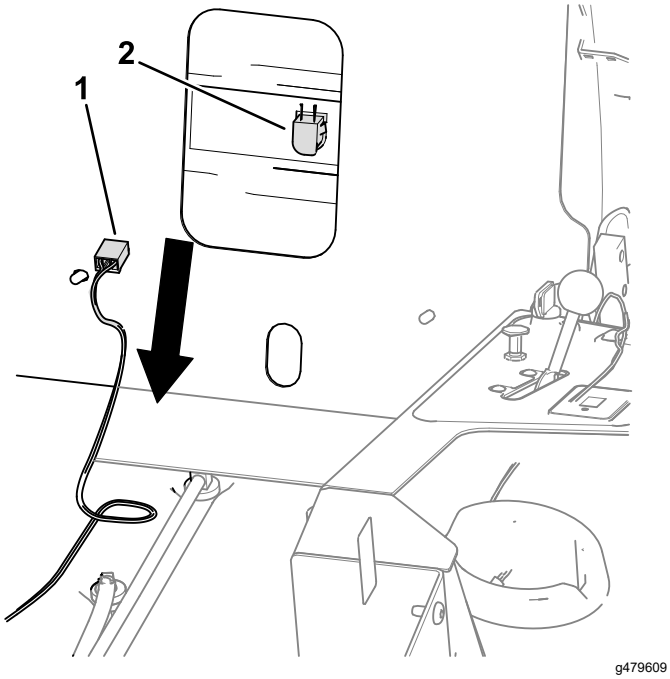

Figure 2

1. Wire harness
2. Bail switch

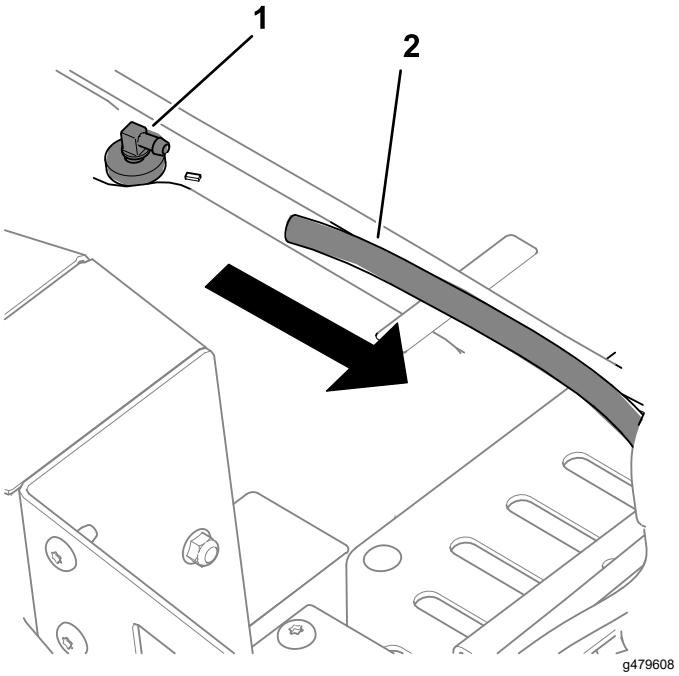

Figure 3

1. Fuel pickup tube
2. Fuel line

2. Remove the fuel line from the fuel pickup tube. Position the fuel line to the side and keep for later use.

⚠ DANGER

In certain conditions, fuel is extremely flammable and highly explosive. A fire or explosion from fuel can burn you and others and can damage property.

Refer to your *Operator's Manual* for a complete list of fuel related precautions.

3. Remove the existing fuel pickup tube and bushing.

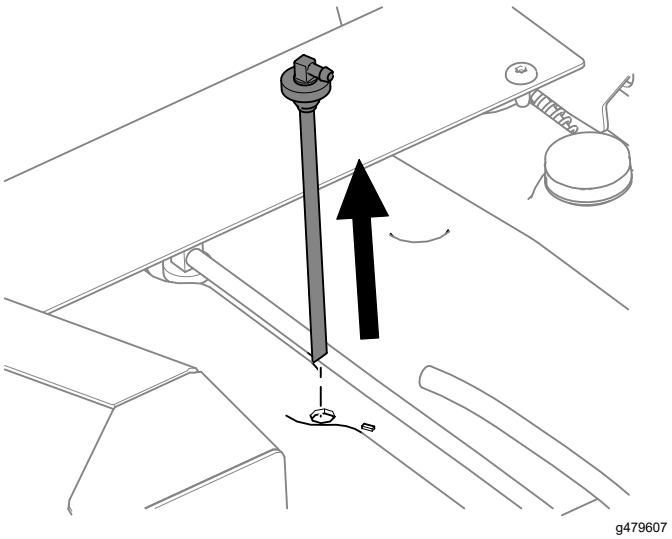

Figure 4

4. Apply rubber-compatible lubricant to the new bushing and install the bushing.

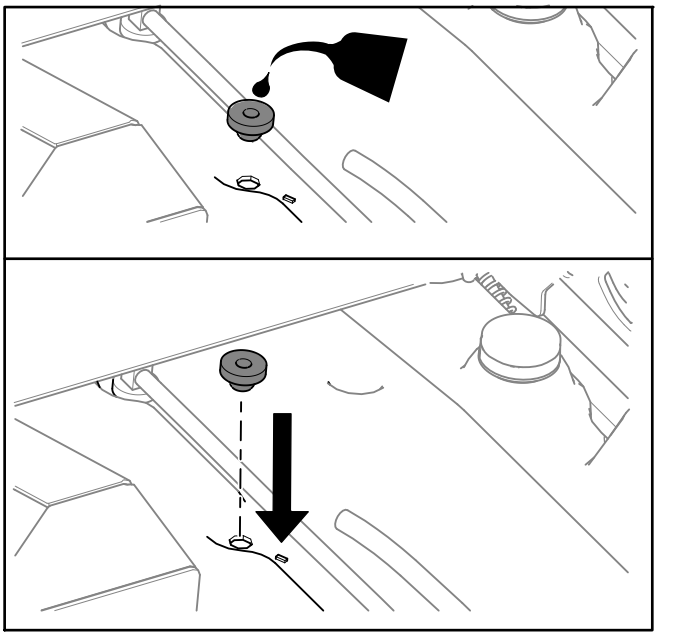

g479647

Figure 5

5. Install the new fuel pickup tube.

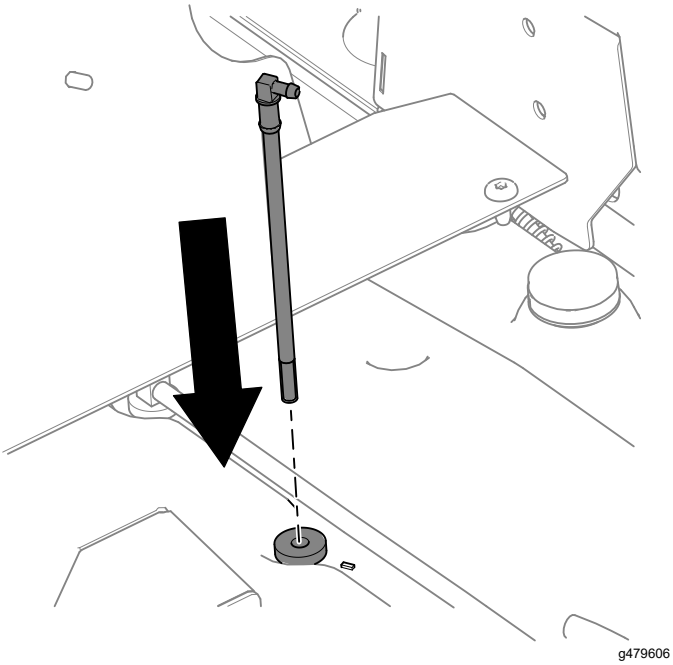

g479606

Figure 6

6. Connect the fuel line to the new fuel pickup tube.

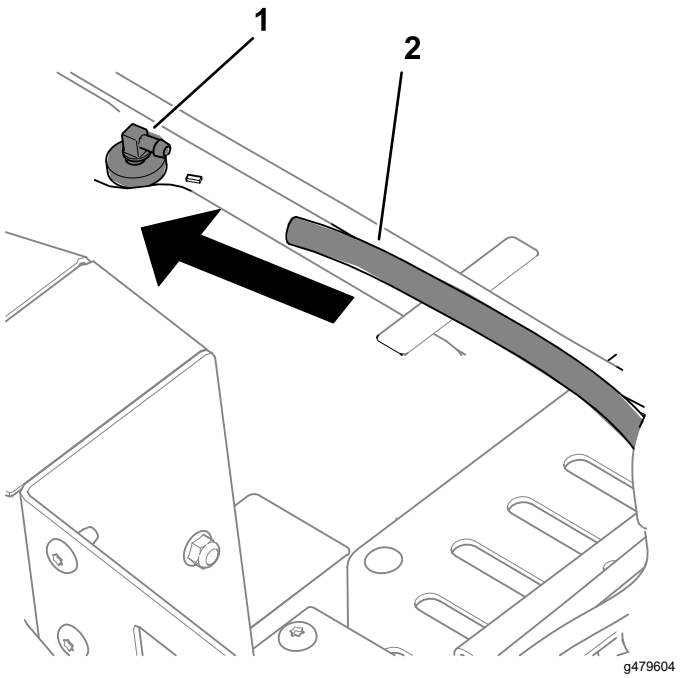

g479604

Figure 7

1. Fuel pickup tube
2. Fuel line

7. Connect the wire harness to the seat-switch under the seat and rotate the seat into place.



Count on it.