WORX NITRO

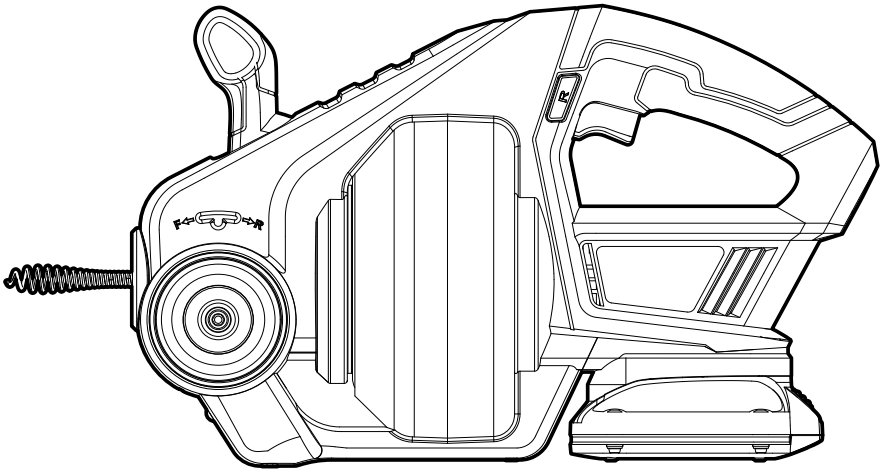

20V Cordless Drain Auger	**EN**	**P05**
Déboucheur de canalisations sans fil 20V	**F**	**P10**
Tornillo sinfín de drenaje de 20 V sin cable	**ES**	**P16**

HELPLINE NUMBER
NUMÉRO DU SERVICE D'ASSISTANCE
NÚMERO DE LÍNEA DE AYUDA
1-866-354-WORX (9679)

WX891L WX891L.X

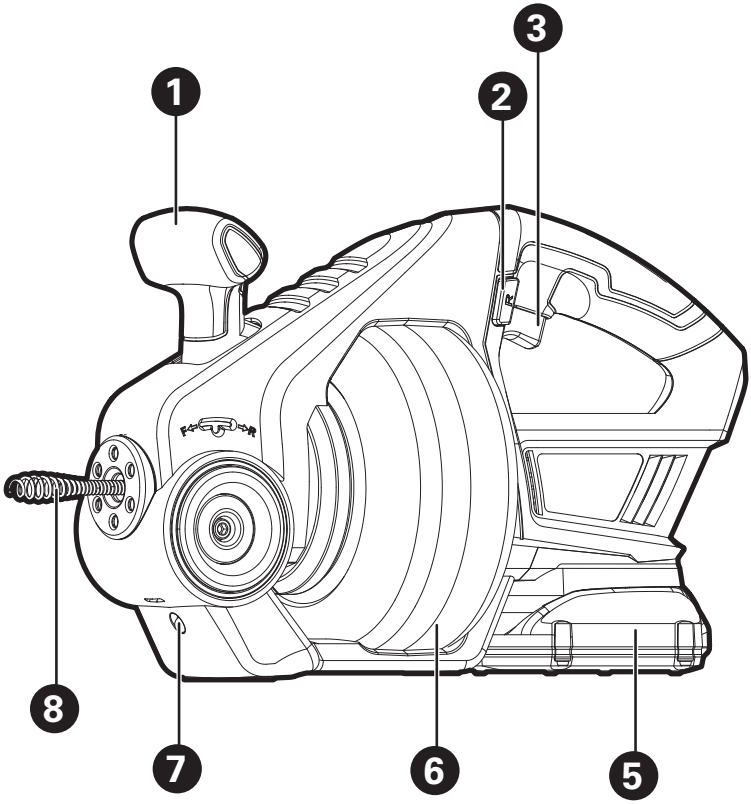
1
2
3
8
7
6
5

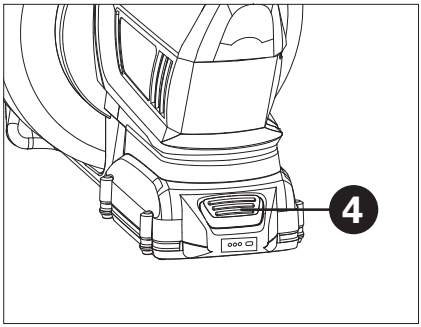
4

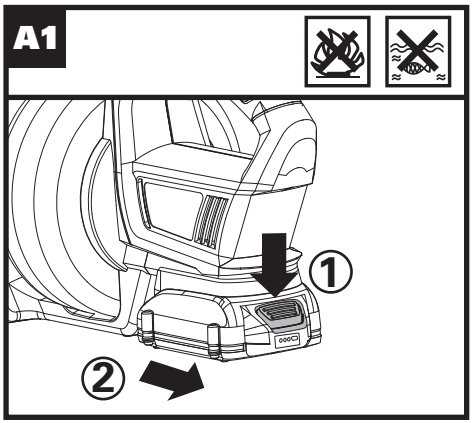
A1
①
②

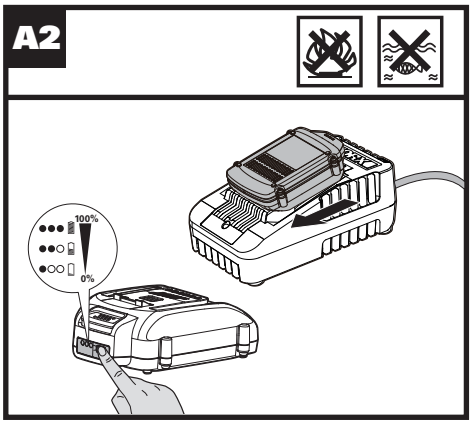
A2
100%
0%

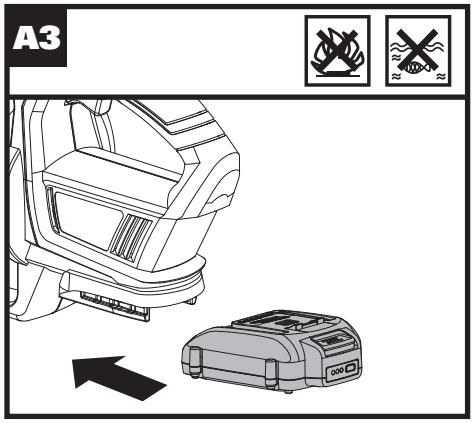
A3

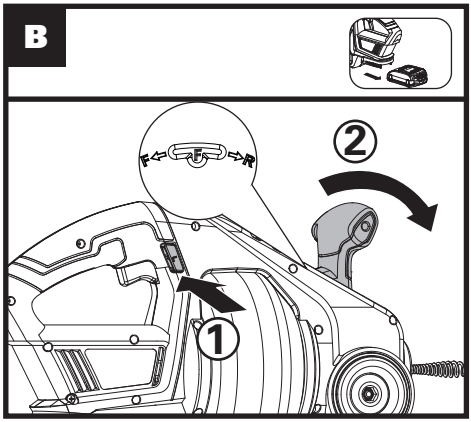
B
F
R
②
①

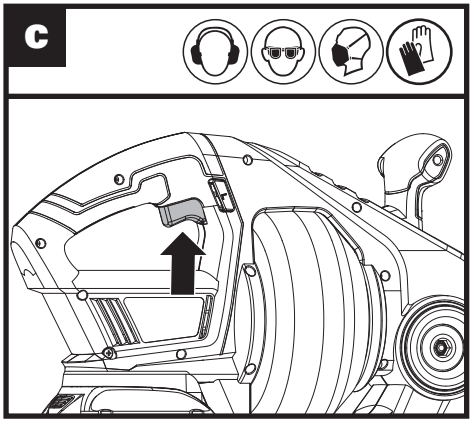
C

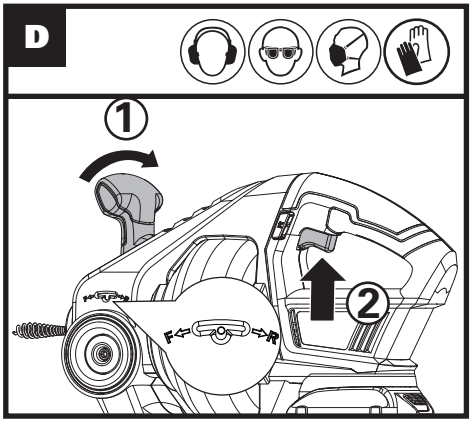
D
①
②
F
R

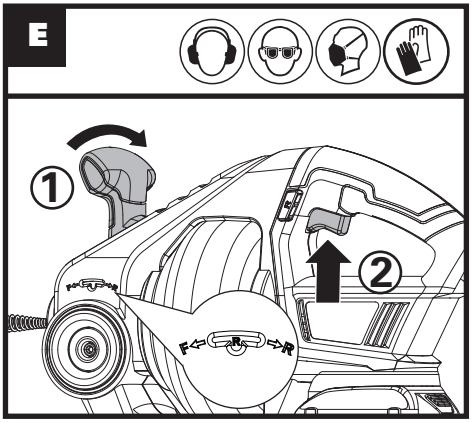
E
1
2
F
R
R

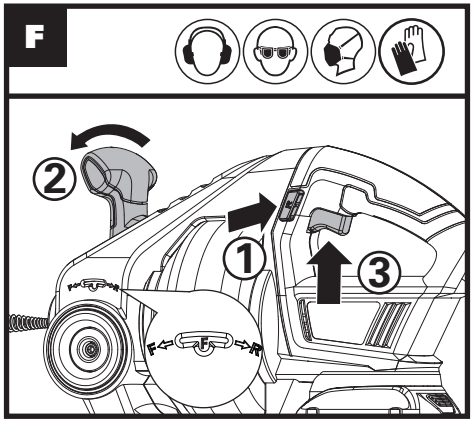
F
2
1
3
F
R

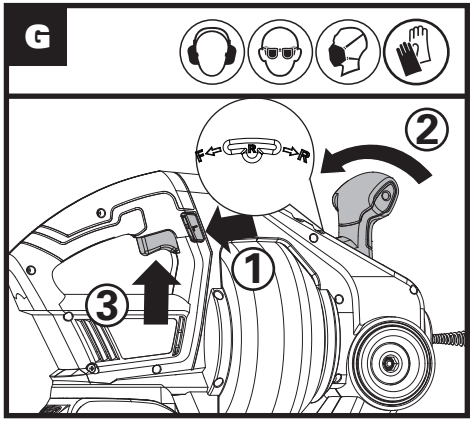
G
2
F
R
1
3

PRODUCT SAFETY

⚠ WARNING: This product can expose you to chemicals including lead and Di (2-ethylhexyl) phthalate (DEHP) which are known to the State of California to cause cancer and birth defects or other reproductive harm. For more information go to www.P65Warnings.ca.gov.

GENERAL POWER TOOL SAFETY WARNINGS

⚠ WARNING Read all safety warnings, instructions, illustrations and specifications provided with this power tool. *Failure to follow all instructions listed below may result in electric shock, fire and/or serious injury.*

Save all warnings and instructions for future reference.
The term "power tool" in the warnings refers to your mains-operated (corded) power tool or battery-operated (cordless) power tool.

1) Work area safety

a) Keep work area clean and well lit. *Cluttered or dark areas invite accidents.*

b) Do not operate power tools in explosive atmospheres, such as in the presence of flammable liquids, gases or dust. *Power tools create sparks which may ignite the dust or fumes.*

c) Keep children and bystanders away while operating a power tool. *Distractions can cause you to lose control.*

2) Electrical safety

a) Power tool plugs must match the outlet. Never modify the plug in any way. Do not use any adapter plugs with earthed (grounded) power tools. *Unmodified plugs and matching outlets will reduce risk of electric shock.*

b) Avoid body contact with earthed or grounded surfaces, such as pipes, radiators, ranges and refrigerators. *There is an increased risk of electric shock if your body is earthed or grounded.*

c) Do not expose power tools to rain or wet conditions. *Water entering a power tool will increase the risk of electric shock.*

d) Do not abuse the cord. Never use the cord for carrying, pulling or unplugging the power tool. Keep cord away from heat, oil, sharp edges or moving parts. *Damaged or entangled cords increase the risk of electric shock.*

e) When operating a power tool outdoors, use an extension cord suitable for outdoor use. *Use of a cord suitable for outdoor use reduces the risk of electric shock.*

f) If operating a power tool in a damp location is unavoidable, use a residual current device (RCD) protected supply. *Use of an RCD reduces the risk of electric shock.*

3) Personal safety

a) Stay alert, watch what you are doing and use common sense when operating a power tool. Do not use a power tool while you are tired or under the influence of drugs, alcohol or medication. *A moment of inattention while operating power tools may result in serious personal injury.*

b) Use personal protective equipment. Always wear eye protection. *Protective equipment such as dust mask, non-skid safety shoes, hard hat, or hearing protection used for appropriate conditions will reduce personal injuries.*

c) Prevent unintentional starting. Ensure the switch is in the off-position before connecting to power source and/or battery pack, picking up or carrying the tool. *Carrying power tools with your finger on the switch or energising power tools that have the switch on invites accidents.*

d) Remove any adjusting key or wrench before turning the power tool on. *A wrench or a key left attached to a rotating part of the power tool may result in personal injury.*

e) Do not overreach. Keep proper footing and balance at all times. *This enables better control of the power tool in unexpected situations.*

f) Dress properly. Do not wear loose clothing or jewelry. Keep your hair and clothing away from moving parts. *Loose clothes, jewelry or long hair can be caught in moving parts.*

g) If devices are provided for the connection of dust extraction and collection facilities, ensure these are connected and properly used. *Use of dust collection can reduce dust-related hazards.*

h) Do not let familiarity gained from frequent use of tools allow you to become complacent and ignore tool safety principles. *A careless action can cause severe injury within a fraction of a second.*

4) Power tool use and care

a) Do not force the power tool. Use the correct power tool for your application. *The correct power tool will do the job better and safer at the rate for which it was designed.*

b) Do not use the power tool if the switch does not turn it on and off. *Any power tool that cannot be controlled with the switch is dangerous and must be repaired.*

c) Disconnect the plug from the power source and/or remove the battery pack, if detachable, from the power tool before making any adjustments, changing accessories, or storing power tools. *Such preventive safety measures reduce the risk of starting the power tool accidentally.*

d) Store idle power tools out of the reach of children and do not allow persons unfamiliar with the power tool or these instructions to operate the power tool. *Power tools are dangerous in the hands of untrained users.*

e) Maintain power tools and accessories. Check for misalignment or binding of moving parts, breakage of parts and any other condition that may affect the power tool's operation. If damaged, have the power tool repaired

before use. *Many accidents are caused by poorly maintained power tools.*

f) Keep cutting tools sharp and clean. *Properly maintained cutting tools with sharp cutting edges are less likely to bind and are easier to control.*

g) Use the power tool, accessories and tool bits etc. in accordance with these instructions, taking into account the working conditions and the work to be performed. *Use of the power tool for operations different from those intended could result in a hazardous situation.*

h) Keep handles and grasping surfaces dry, clean and free from oil and grease. *Slippery handles and grasping surfaces do not allow for safe handling and control of the tool in unexpected situations.*

5) Battery tool use and care

a) Recharge only with the charger specified by the manufacturer. *A charger that is suitable for one type of battery pack may create a risk of fire when used with another battery pack.*

b) Use power tools only with specifically designated battery packs. *Use of any other battery packs may create a risk of injury and fire.*

c) When battery pack is not in use, keep it away from other metal objects, like paper clips, coins, keys, nails, screws or other small metal objects, that can make a connection from one terminal to another. *Shorting the battery terminals together may cause burns or a fire.*

d) Under abusive conditions, liquid may be ejected from the battery; avoid contact. If contact accidentally occurs, flush with water. If liquid contacts eyes, additionally seek medical help. *Liquid ejected from the battery may cause irritation or burns.*

e) Do not use a battery pack or tool that is damaged or modified. *Damaged or modified batteries may exhibit unpredictable behaviour resulting in fire, explosion or risk of injury.*

f) Do not expose a battery pack or tool to fire or excessive temperature. *Exposure to fire or temperature above 266 °F (130 °C) may cause explosion.*

g) Follow all charging instructions and do not charge the battery pack or tool outside the temperature range specified in the instructions. *Charging improperly or at temperatures outside the specified range may damage the battery and increase the risk of fire.*

6) Service

a) Have your power tool serviced by a qualified repair person using only identical replacement parts. *This will ensure that the safety of the power tool is maintained.*

b) Never service damaged battery packs. *Service of battery packs should only be performed by the manufacturer or authorized service providers.*

SAFETY INSTRUCTIONS FOR DRAIN AUGERS

a) Only grasp the rotating cable with gloves recommended by the manufacturer. *Latex or loose-fitting gloves or rags can become wrapped around the cable and may result in serious personal injury.*

b) Do not allow the cutter to stop turning while the cable is turning. *This can overstress the cable and may cause twisting, kinking or breaking of the cable and may result in serious personal injury.*

c) Use latex or rubber gloves inside the gloves recommended by the manufacturer, goggles, face shields, protective clothing, and respirator when chemicals, bacteria or other toxic or infectious substances are suspected to be in a drain line. *Drains may contain chemicals, bacteria and other substances that may cause burns, be toxic or infectious or may result in other serious personal injury.*

d) Practice good hygiene. Do not eat or smoke while handling or operating the tool. After handling or operating drain cleaning equipment, use hot, soapy water to wash hands and other body parts exposed to drain contents. *This will help reduce the risk of health hazards due to exposure to toxic or infectious material.*

e) Only use the drain auger for the recommended drain sizes. *Using the wrong size drain cleaner can lead to twisting, kinking or breaking of the cable and may result in personal injury.*

f) Always wear safety goggles or eye protection when assembling parts, operating the tool, or performing maintenance. Following this rule will reduce the risk of serious personal injury.

1) Position the the drain auger within four inches of the drain or inlet being cleared. Operating the tool at greater distances can result in the cable twisting or binding.
2) Avoid running the tool in reverse for extended periods of time as this can damage the cable.
3) Never place your hand near the drum or the cable as it is rotating. Following this rule will reduce the risk of serious personal injury.
4) Clogged drains may contain bacteria, cleaning solutions, or other potentially harmful substances.
5) Always wear protective clothing, eye protection, and gloves while operating this tool to prevent these substances from contacting your skin and eyes.
6) When removing the cable from a drain, remove it slowly to avoid “splash back”. Use warm, soapy water to clean hands and other body parts that may have been exposed to potentially harmful substances.

SAFETY WARNINGS FOR BATTERY PACK

a) Do not dismantle, open or shred battery pack.

b) Do not expose battery pack to heat or fire. Avoid storage in direct sunlight.

c) Do not short-circuit a battery pack. Do not store battery packs haphazardly in a box or drawer where they may short-circuit each other or be short-circuited by other metal objects. When

battery pack is not in use, keep it away from other metal objects, like paper clips, coins, keys, nails, screws or other small metal objects, that can make a connection from one terminal to another. Shorting the battery terminals together may cause burns or fire.

d) Do not remove battery pack from its original packaging until required for use.
e) Do not subject battery pack to mechanical shock.
f) In the event of battery leaking, do not allow the liquid to come in contact with the skin or eyes. If contact has been made, wash the affected area with copious amounts of water and seek medical advice.
g) Observe the plus (+) and minus (–) marks on the battery back and equipment and ensure correct use.
h) Do not use any battery pack which is not designed for use with the equipment.
i) Keep battery pack out of the reach of children.
j) Seek medical advice immediately if a cell or battery has been swallowed.
k) Always purchase the battery pack recommended by the device manufacturer for the equipment.
l) Keep battery pack clean and dry.
m) Wipe the battery pack terminals with a clean dry cloth if they become dirty.
n) Battery pack needs to be charged before use. Always use the correct charger and refer to the manufacturer's instructions or equipment manual for proper charging instructions.
o) Do not leave battery pack on prolonged charge when not in use.
p) After extended periods of storage, it may be necessary to charge and discharge the battery pack several times to obtain maximum performance.
q) Recharge only with the charger specified by WorxNITRO. Do not use any charger other than that specifically provided for use with the equipment.
r) Retain the original product literature for future reference.
s) Use only the battery pack in the application for which it was intended.
t) Remove the battery pack from the equipment when not in use.
u) Dispose of properly.
v) Do not mix cells of different manufacture, capacity, size or type within a device.

SYMBOL

	To reduce the risk of injury, user must read instruction manual
	Warning
	Wear ear protection
	Wear eye protection
	Wear dust mask
	Batteries may enter water cycle if disposed improperly, which can be hazardous for ecosystem. Do not dispose of waste batteries as unsorted municipal waste.
	Do not burn
 Li-Ion	Li-Ion battery, battery must be recycled
	Make sure the battery is removed prior to changing accessories.
	Wear protective gloves



call2recycle®

POSITEC Inc. has established a partnership with the RBRC Corporation to recycle any Positec batteries with the RBRC-call2recycle seal. For environmental protection, please do not discard batteries in the trash. After the batteries' life cycle is ended, then please call 1-800-822-8837 for a free service that will properly dispose of the battery.

COMPONENT LIST

1.	**FEED HANDLE (FEED, NEUTRAL, AND RETRACT)**
2.	**ROTATION BUTTON**
3.	**VARIABLE SPEED TRIGGER**

4.	**BATTERY PACK RELEASE BUTTON ***
5.	**BATTERY PACK ***
6.	**DRUM**
7.	**LED LIGHT**
8.	**CABLE**

*** Not all the accessories illustrated or described are included in standard delivery.**

TECHNICAL DATA

Type **WX891L WX891L.X (891 - designation of machinery, representative of drain auger)**

	WX891L WX891L.X**
Voltage	20 V ⎓ Max. ***
Rotating speed	0~560 rpm
Dredging capability	ϕ19~76 mm (3/4"~3")
Cable size	L*D=7.6 m(25 ft) * ϕ 7 mm (1/4")
Machine weight (bare tool)	7.5 lbs (3.4 kg)

**X may be followed by one or two characters. All models are the same except model number and trademark. The suffix in models may be number from "1" to "999" or English letter "A" to "Z" or "M1" to" M9" which means different package or the various of accessories packed in the package.
***Voltage measured without workload. Initial battery voltage reaches maximum of 20 volts. Nominal voltage is 18 volts.

Category	**Type**	**Capacity**
20V Battery	WA3520	1.5 Ah
	WA3525	2.0 Ah
	WA3575	2.0 Ah
	WA3578	4.0 Ah
	WA3012	4.0 Ah
20V Charger	WA3742	0.4 A
	WA3875	2.0 A
	WA3881	2.0 A

We recommend that you purchase your accessories from the same store that sold you the tool. Refer to the accessory packaging for further details. Store personnel can assist you and offer advice.

OPERATING INSTRUCTIONS

NOTE: Before using the tool, read the instruction book carefully.

INTENDED USE:
You may use this product for the purposes of clearing obstructions from sinks, toilets, and bathtub pipes 3/4"-4" (19-76mm).

Assembly and Operation

Action	**Figure**
BEFORE OPERATION	
Removing the battery pack	See Fig. A1
Charging the battery back	See Fig. A2
Installing the battery pack	See Fig. A3
OPERATION	
Set the Rotation Button 1) Fully depress the L position to allow for forward/clockwise rotation. 2) Set the Feed Handle in "Feed" position by pushing handle forward. The indicator should display "F".	See Fig. B
Advancing/Retracting the Cable Hold the drain auger within four inches of the drain or overflow and manually feed the cable into the drain pipe. Squeeze the variable speed trigger to advance the cable into the drain. **NOTE:** Advance the cable slowly at first. Advancing it too rapidly can result in twisting or binding. The cable should advance freely through the drain pipe until it contacts the obstruction or is caught in a P-trap.	See Fig. C

If the cable is caught in a P-trap, additional force or increased trigger pressure should be enough to advance it past the bend in the pipe. 1) If the cable has contacted an obstruction, set Feed Handle in the neutral position. In neutral the cable will not advance or retract. Indicator will display "O" when set to neutral. 2) Squeeze the variable speed trigger and hold for several seconds allowing the tip of the cable to bore into the obstruction. The cable will then wrap around the obstruction. **NOTE:** If the cable stops rotating, release the variable speed trigger to avoid kinking or damaging the cable.	See Fig. D
1) Set Feed Handle in retract mode. Indicator will display "R". 2) Squeeze the variable speed trigger and slowly retract the cable and pull the obstruction through the drain. **NOTICE: Keep the rotation button in L when retracting cable out of the drain. R position should only be used momentarily to relieve cable tension.** Once the obstruction is cleared, run water through your drain to confirm that the water is flowing freely. To prevent accidents, turn off the tool and remove the Battery Pack after use. Clean the Cable (see below), then store the tool indoors out of children's reach.	See Fig. E

CLEANING THE DRAIN AUGER

The drain auger should be cleaned after each use to prevent contamination and residue build up.

To drain the drum:
1) Remove the battery pack from the tool.
2) Manually rotate the drum until the waterproof plug is exposed.
   - Remove the waterproof plug with an allen wrench
3) Allow any liquids inside the drum to pour down a drain or into a container approved for liquid waste.

To clean the cable:
1) Remove the battery pack from the tool.
2) Using a clean cloth and warm soapy water, pull the cable out from the tool, cleaning it as it advances. Continue until the cable has been fully advanced and completely cleaned.
3) Using a clean, dry cloth, pull the cable back into the tool, drying it as it retracts. Continue until the cable has been fully retracted.
4) To ensure that no water entered the tool, drain the drum as described earlier.

MAINTAIN TOOLS WITH CARE

Remove the battery before carrying out any adjustment, servicing or maintenance.
Keep tools sharp and clean for better and safer performance. Follow instructions for lubricating and changing accessories. Inspect tool cords periodically and if damaged, have repaired by authorized service facility. Your power tool requires no additional lubrication or maintenance. There are no user serviceable parts in your power tool. Never use water or chemical cleaners to clean your power tool. Wipe clean with a dry cloth. Always store your power tool in a dry place. Keep the motor ventilation slots clean. Keep all working controls free of dust.
Periodically clear dust and chips from guard and base to ensure proper performance.

FOR BATTERY TOOLS

The ambient temperature range for the use and storage of tool and battery is 32 °F-113 °F (0°C-45°C).
The recommended ambient temperature range for the charging system during charging is 32 °F-104 °F (0°C-40°C).

TROUBLE SHOOTING

Symptom	Possible Solution
The cable and onstruction are stuck in the pipe and cannot be retracted	See Fig. F: 1.) Set the R position. In this position, the rotation of the cable will be reversed to counter-clockwise. 2.) Set Feed Handle to "Feed". The indicator will display "F". 3.) Lightly squeeze the variable speed trigger. **Backward position should only be used momentarily to relieve cable tension.** If that doesn't work, pull out the cable by hand. Remember to wear safety gloves and remove the battery from the tool and slowly pull the cable out of the pipe.
The cable cannot wrap obstruction	Push the Feed Handle to neutral and allow the obstruction to wrap around the shaft. Switch the Rotation button R/L until the obstruction is dislodged. See Fig. G: 1) Set the L position when retracting cable out of the drain. 2) Set Feed Handle in retract mode. Indicator will display "R". 3) Squeeze the variable speed trigger and slowly retract the cable and pull the obstruction through the drain.
The cable is twisted	Release the variable speed trigger and stop rotation. Set the Feed Handle in neutral and set the R position. Lightly press the variable speed trigger to allow the cable to free itself. ⚠ **WARNING: If you are unable to clear the pipe or encounter problems that cannot be resolved, please contact a professional to avoid causing more serious blockages and distress.**