Form No. 3442-644 Rev A

TORO®

Count on it.

Operator's Manual

Powered Bagger

TITAN® MAX Zero-Turn-Radius Riding Mower

Model No. 79347—Serial No. 400000000 and Up

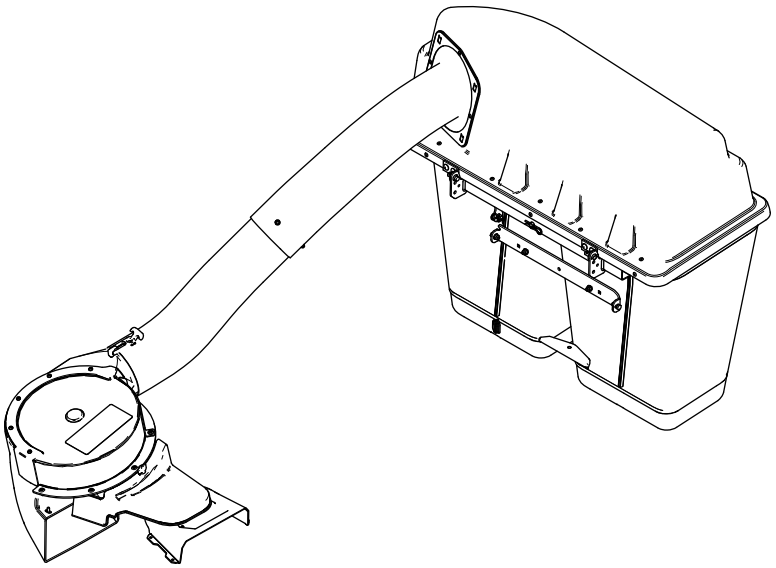

Register at www.Toro.com.
Original Instructions (EN)

3442-644

⚠ WARNING

CALIFORNIA
Proposition 65 Warning

Use of this product may cause exposure to chemicals known to the State of California to cause cancer, birth defects, or other reproductive harm.

Introduction

Read this information carefully to learn how to operate and maintain your product properly and to avoid injury and product damage. You are responsible for operating the product properly and safely.

Visit www.Toro.com for product safety and operation training materials, accessory information, help finding a dealer, or to register your product.

Whenever you need service, genuine Toro parts, or additional information, contact an Authorized Service Dealer or Toro Customer Service and have the model and serial numbers of your product ready. Figure 1 identifies the location of the model and serial numbers on the product. Write the numbers in the space provided.

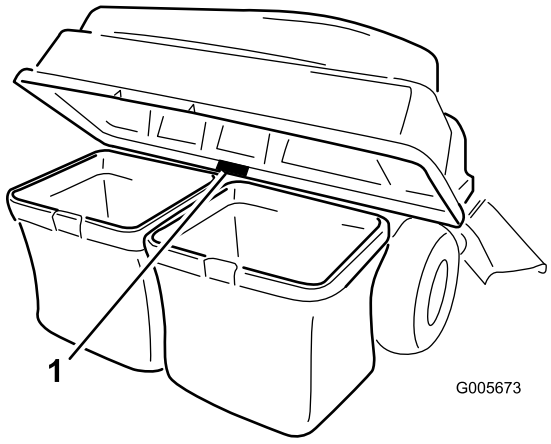

g005673

Figure 1

1. Model and serial number location

Model No. _____

Serial No. _____

This manual uses 2 words to highlight information. **Important** calls attention to special mechanical information and **Note** emphasizes general information worthy of special attention.

The safety-alert symbol (Figure 2) appears both in this manual and on the machine to identify important safety messages that you must follow to avoid accidents. This symbol will appear with the word **Danger**, **Warning**, or **Caution**.

- **Danger** indicates an imminently hazardous situation which, if not avoided, **will** result in death or serious injury.
- **Warning** indicates a potentially hazardous situation which, if not avoided, **could** result in death or serious injury.
- **Caution** indicates a potentially hazardous situation which, if not avoided, **may** result in minor or moderate injury.



g000502

Figure 2

1. Safety-alert symbol

Contents

Safety 3
Safety and Instructional Decals 4
Setup 6
1 Preparing the Machine 7
2 Installing the Weight Kit 8
3 Removing the Grass Deflector and Belt Cover 8
4 Installing the Baffle and Blower Support 10
5 Installing the Pulley Assembly, Belt Cover, and Shoulder Bolt 12
6 Installing the Blower Assembly 13
7 Installing the Blower Belt and Powered Bagger Cover 14
8 Installing the Bagger Support (If Applicable) 15
9 Installing the Transmission Support 16
10 Installing the Cross Brace 16
11 Installing the Pivot Assembly 18
12 Installing the Hold-Down Rod 18
13 Assembling the Hood 19
14 Installing the Hood 19
15 Installing the Bags 20
16 Installing the Hitch Cover 20
17 Installing the Discharge Tubes 21
18 Adjusting the Parking Brake 23
19 Checking the Tire Pressure 23
Operation 24

© 2020—The Toro® Company
8111 Lyndale Avenue South
Bloomington, MN 55420

Contact us at www.Toro.com.
Printed in the USA
All Rights Reserved

Emptying the Grass Bags 24
Clearing Obstructions from the Bagger 25
Removing the Bagger 25
Operating Tips 26
Maintenance 27
Recommended Maintenance Schedule(s) 27
Preparing for Maintenance 27
Cleaning the Hood Screen 27
Cleaning the Bagger and Bags 28
Inspecting the Blower Belt 28
Replacing the Blower Belt 28
Inspecting the Bagger 28
Inspecting the Mower Blades 28
Replacing the Grass Deflector 29
Storage 30
Storing the Bagger Attachment 30
Troubleshooting 31

Safety

- Become familiar with the safe operation of the equipment, with the operator controls, and safety signs.
- Use extra care with grass catchers or other attachments. These can change the operating characteristics and the stability of the machine.
- Follow the manufacturer's recommendations for adding or removing wheel weights or counterweights to improve stability.
- Do not use a grass catcher on steep slopes. A heavy grass catcher could cause loss of control or overturn the machine.
- Slow down and use extra care on hillsides. Be sure to travel in the recommended direction on hillsides. Turf conditions can affect the stability of the machine. Use extreme caution while operating near drop-offs.
- Keep all movement on slopes slow and gradual. Do not make sudden changes in speed, direction, or turning.
- The grass catcher can obstruct the view to the rear. Use extra care when operating in reverse.
- Use care when loading or unloading the machine into a trailer or truck.
- Never operate with the discharge deflector raised, removed or altered, unless using a grass catcher.
- Keep hands and feet away from moving parts. Do not make adjustments with the engine running.
- Park the machine on level ground, disengage the drives, chock the wheels, and shut off the engine before leaving the operator's position for any reason including emptying the grass catcher or unclogging the chute.
- If you remove the grass catcher, be sure to install any discharge deflector or guard that might have been removed to install the grass catcher. Do not operate the mower without either the entire grass catcher or the grass deflector in place.
- Shut off the engine before removing the grass catcher or unclogging the chute.
- Do not leave grass in the grass catcher for extended periods of time.
- Grass catcher components are subject to wear, damage and deterioration, which could expose you to moving parts or allow objects to be thrown. Frequently check components and replace with the manufacturer's recommended parts, when necessary.

Safety and Instructional Decals

Safety decals and instructions are easily visible to the operator and are located near any area of potential danger. Replace any decal that is damaged or missing.

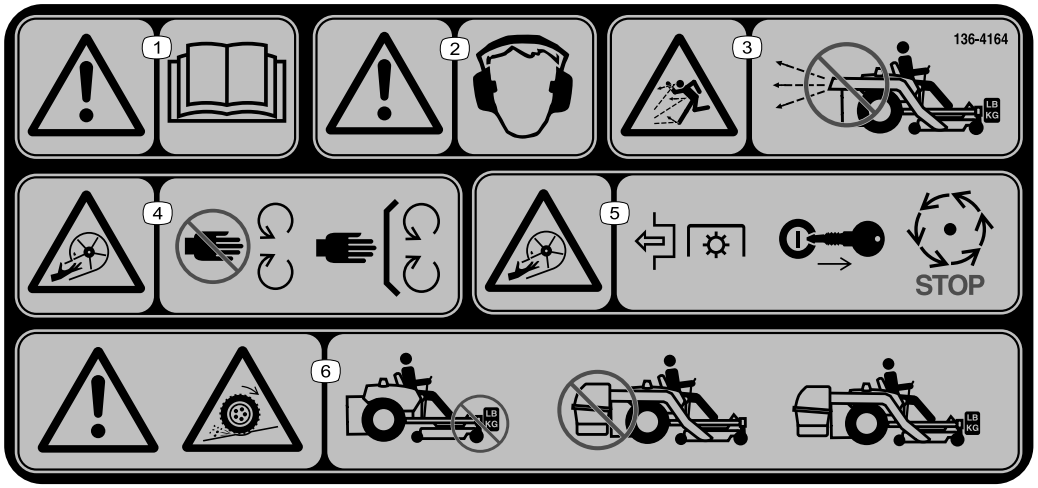

decal136-4164

136-4164

1. Warning—read the *Operator's Manual*.
2. Warning—hearing protection must be worn.
3. Thrown object hazard—do not operate the blower without the entire system installed and latched.
4. Cutting/dismemberment hazard, impeller—keep away from moving parts; keep all guards and covers in place.
5. Cutting/dismemberment hazard, impeller—disengage the PTO, remove the key, and wait for all moving parts to stop.
6. Warning; loss of traction—do not operate with only counterbalance weights installed; do not operate with only E-Z Vac installed; operate only with both E-Z Vac and counterbalance weights installed.

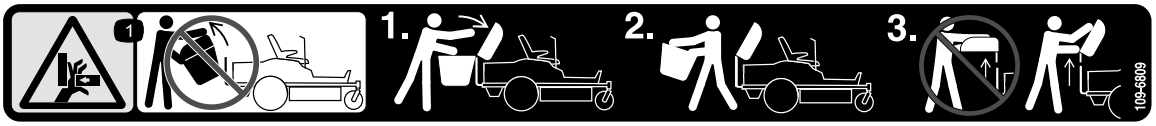

decal109-6809

109-6809

1. Crushing hazard of hand—do not remove the whole bagger from the machine; open the bagger top and then remove the bag(s) from the bagger. Do not remove the bagger top when it is closed; open the bagger top and then remove it.

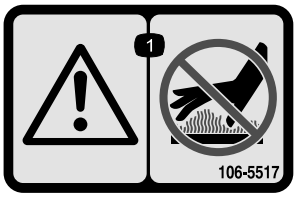

decal106-5517

106-5517

1. Warning—do not touch the hot surface.

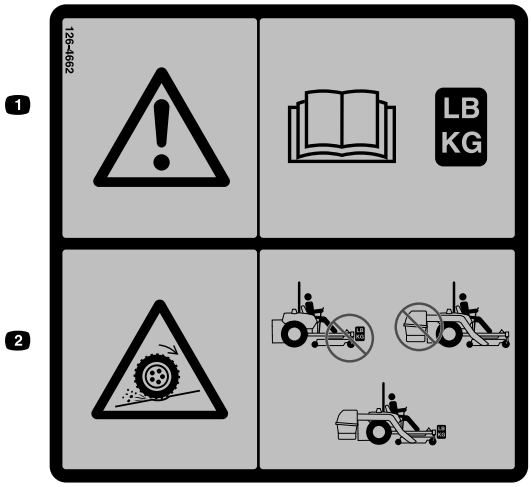

decal126-4662

126-4662

1. Warning—read the *Operator's Manual* for the correct quantity of counterbalance weight(s).
2. Loss of traction and steering or reduced stability hazard—Ez Vac counterbalance weight(s) installed without the Ez Vac may cause loss of traction and steering control. The Ez Vac installed without the Ez Vac counterbalance weight(s) can cause reduced stability. Install weight(s) only when the Ez Vac is installed.



decal133-8061

133-8061

Setup

Loose Parts

Use the chart below to verify that all parts have been shipped.

Procedure	Description	Qty.	Use
1	No parts required	–	Prepare the machine.
2	Weight Channel plate Plate Tabbed plate Bolt (3/8 x 2-1/2 inches) Nut (3/8 inch)	2 2 2 2 4 4	Install the weights.
3	No parts required	–	Remove the grass deflector and belt cover.
4	Blower support Hex washer-head screw (3/8 x 3/4 inch) Baffle Carriage bolt (5/16 x 3/4 inch) Flange nut (5/16 inch)	1 2 1 4 4	Install the baffle and blower support.
5	Pulley assembly Belt cover	1 1	Install the pulley assembly and belt cover.
6	Blower assembly	1	Install the blower assembly.
7	Powered bagger cover Blower belt	1 1	Install the blower belt and powered bagger cover.
8	Left bagger support Right bagger support Bolt (5/16 x 3-1/4 inches) Flange nut (5/16 inch) Washer	1 1 4 4 4	Install the bagger support.
9	Transmission support	1	Install the transmission support.
10	Cross brace Hex-head bolt (5/16 x 7/8 inch) Flange nut (5/16 inch)	1 4 4	Install the cross brace.
11	Pivot assembly Hairpin cotter	1 1	Install the pivot assembly.
12	Hold-down rod Hairpin cotter	1 1	Install the hold-down rod.
13	Hood Grass screen Hairpin cotter	1 1 2	Assemble the hood.
14	Hood assembly	1	Install the hood.
15	Bag	2	Install the bags.
16	Hitch cover	1	Install the hitch cover.

Procedure	Description	Qty.	Use
17	Upper tube Screw (1/4 x 3/4 inches) Washer (1/4 inch) Locknut (1/4 inch) Lower tube	1 2 2 2 1	Install the discharge tubes.
18	No parts required	–	Adjust the parking brake.
19	No parts required	–	Check the tire pressure.

Determine the left and right sides of the machine from the normal operating position.

1

Preparing the Machine

No Parts Required

Procedure

1. Park the machine on a level surface.
2. Move the motion-control levers to the NEUTRAL-LOCK position.
3. Engage the parking brake.
4. Shut off the engine and remove the key.

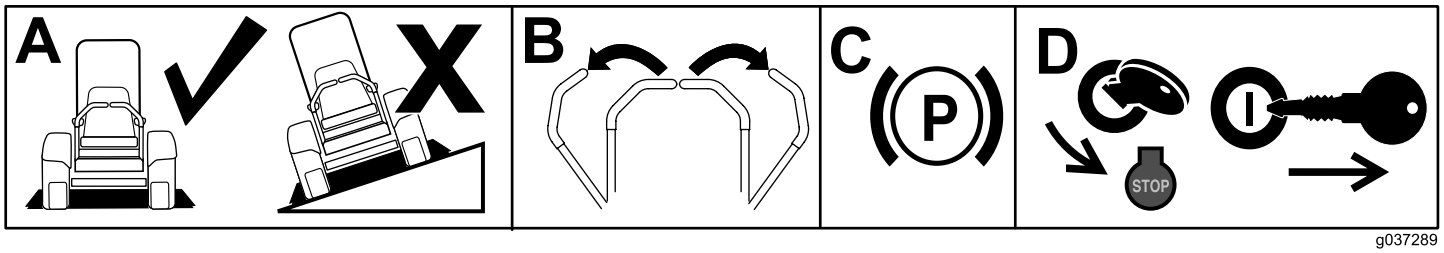

g037289

g037289

Figure 3

2

Installing the Weight Kit

Parts needed for this procedure:

2	Weight
2	Channel plate
2	Plate
2	Tabbed plate
4	Bolt (3/8 x 2-1/2 inches)
4	Nut (3/8 inch)

Procedure

1. Use the bolts (3/8 x 2-1/2 inches) nuts (3/8 inch) to secure the plates to the weight (Figure 4).

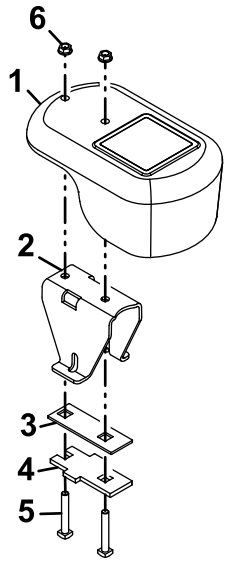

g185955

Figure 4

1. Weight
2. Channel plate
3. Plate
4. Tabbed plate
5. Bolt (3/8 x 2 -1/2 inches)
6. Nut (3/8 inch)

2. Use the knob, washer, and carriage bolt (3/8 x 3-1/2 inch) to secure a caster weight to each caster arm (Figure 5).

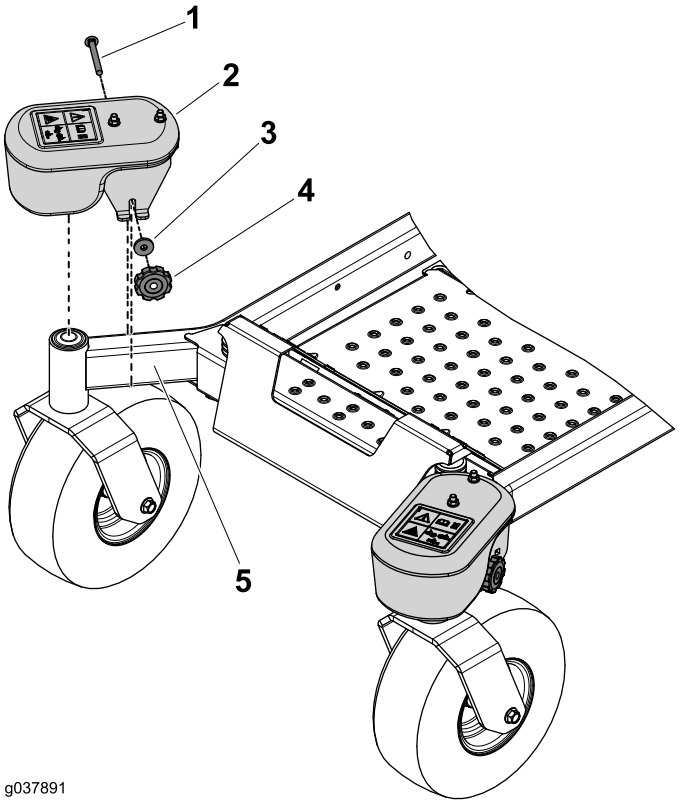

g037891

g037891

Figure 5

1. Carriage bolt (3/8 x 3-1/2 inch)
2. Weight
3. Washer
4. Knob
5. Caster arm

3

Removing the Grass Deflector and Belt Cover

No Parts Required

Procedure

⚠ WARNING

An uncovered discharge opening could allow the machine to throw objects toward you or bystanders and result in serious injury. Also, contact with the blade could occur.

Never operate the lawn mower unless you install a mulch plate, discharge deflector, or grass-collection system.

If you remove the Powered Bagger, install the grass deflector; refer to Replacing the Grass Deflector (page 29).

Inspect the grass deflector for damage before each use. Replace any damaged parts before use.

1. Disengage the spring from the notch in the deflector bracket and slide the rod out of the welded deck brackets, spring, and discharge deflector (Figure 6).

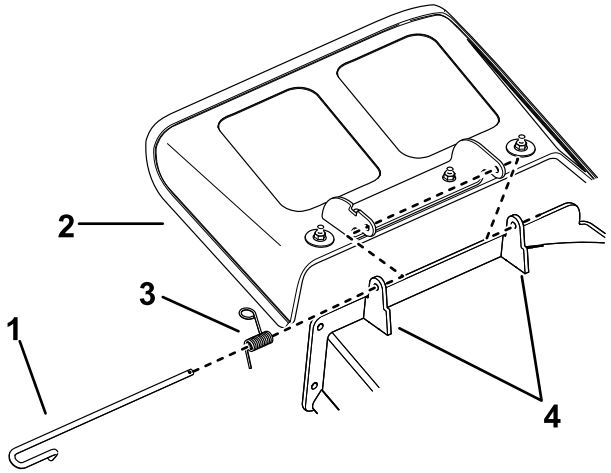

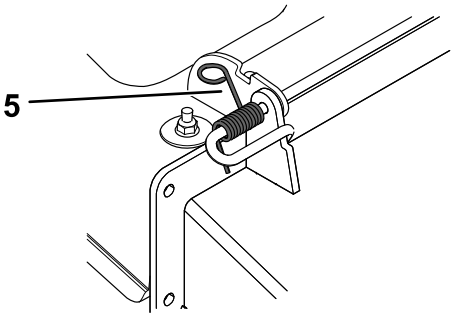

g297555

Figure 6

1. Rod
2. Spring
3. Deflector
4. Deck brackets
5. Spring installed over the rod

2. Remove the deflector (Figure 6).
3. Remove the 4 screws securing the right belt cover, and remove the belt cover (Figure 7).

   Note: Retain the 4 screws for installation in Procedure 5 Installing the Pulley Assembly, Belt Cover, and Shoulder Bolt (page 12).

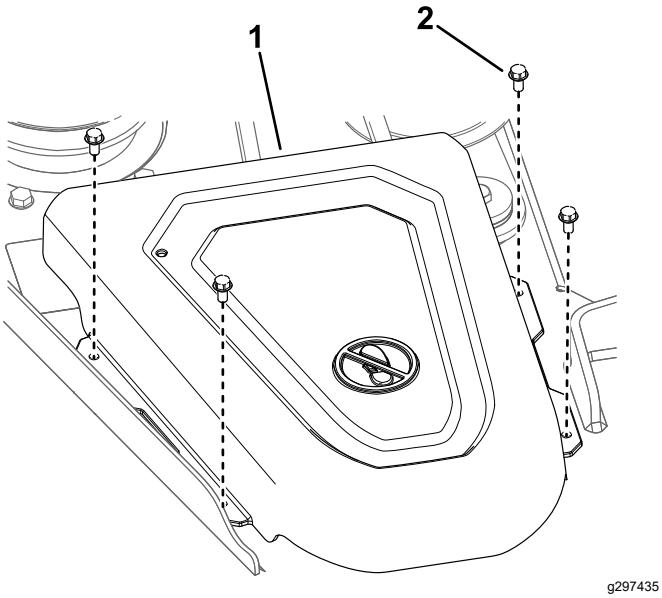

Figure 7

1. Cover
2. Screw

4

Installing the Baffle and Blower Support

Parts needed for this procedure:

1	Blower support
2	Hex washer-head screw (3/8 x 3/4 inch)
1	Baffle
4	Carriage bolt (5/16 x 3/4 inch)
4	Flange nut (5/16 inch)

Procedure

1. Install the blower support to the mower deck using 2 hex washer-head screws (3/8 x 3/4 inch) as shown in Figure 8.

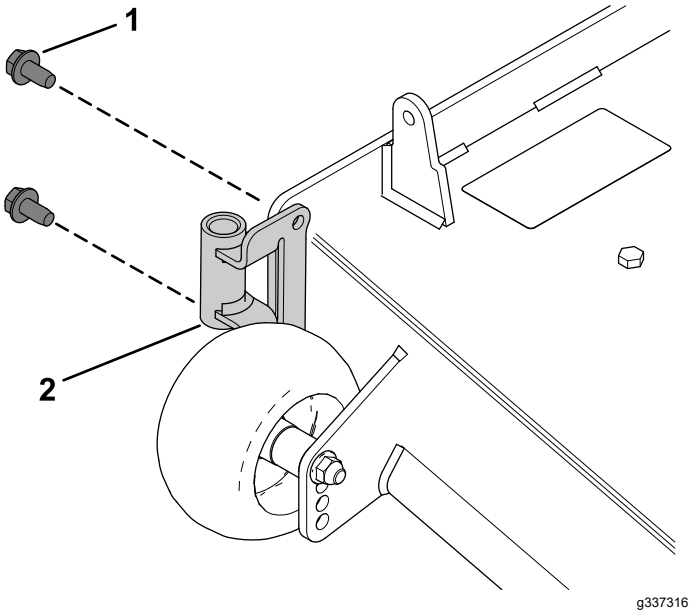

Figure 8

1. Hex washer-head screw (3/8 x 3/4 inch)
2. Blower support

2. Remove the existing bolt and nut from the mower deck (Figure 9).

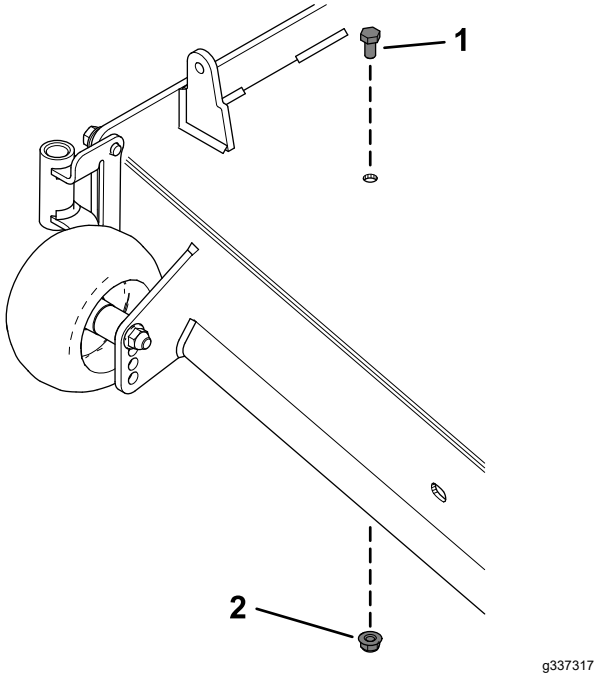

Figure 9

1. Existing bolt
2. Existing nut

3. Install the left side of the baffle using a carriage bolt (5/16 x 3/4 inch) and flange nut (5/16 inch) as shown in Figure 10.
4. Loosen the 2 carriage bolts (5/16 x 3/4 inch) in the baffle slots, and slide the baffle until the hole aligns with the hole in the mower deck (Figure 10).
5. Install baffle as shown in Figure 10.
6. Tighten the 2 carriage bolts (5/16 x 3/4 inch) in the baffle slots (Figure 10).

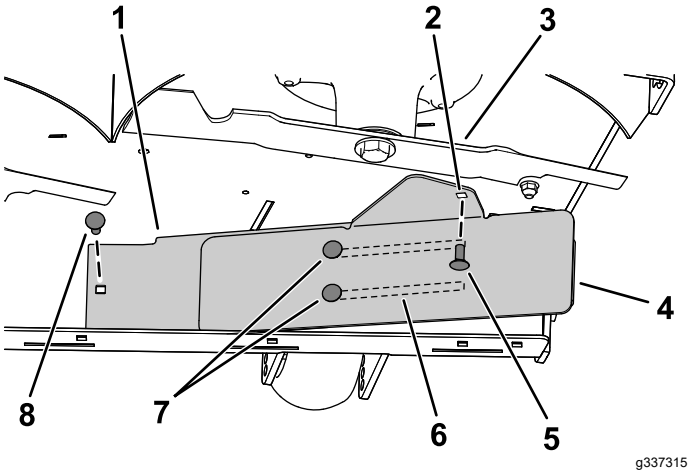

Figure 10

1. Inner baffle
2. Hole for mower deck installation.
3. Right blade
4. Outer baffle
5. Install this carriage bolt (5/16 x 3/4 inch) and flange nut (5/16 inch) after sliding the baffle.
6. Slots in the baffle
7. Loosen these 2 carriage bolts (5/16 x 3/4 inch) and 2 flange nut (5/16 inch).
8. Install this carriage bolt (5/16 x 3/4 inch) and flange nut (5/16 inch) first.

5

Installing the Pulley Assembly, Belt Cover, and Shoulder Bolt

Parts needed for this procedure:

1	Pulley assembly
1	Belt cover

Procedure

1. Remove the nut and washer from the right mower deck pulley.
2. Install the pulley assembly to the right mower deck pulley with the previously removed nut and washer (Figure 11).
3. Torque the nut to 136 to 149 N·m (100 to 110 ft-lb).

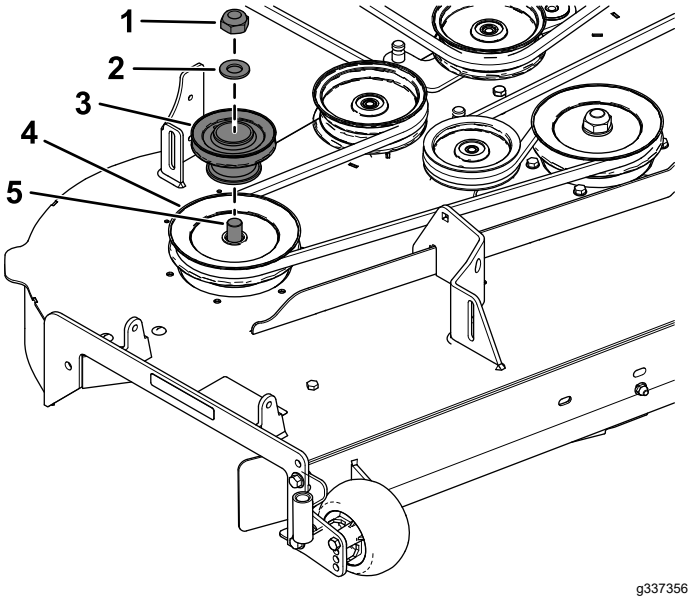

Figure 11

1. Existing pulley nut
2. Existing washer
3. Blower pulley
4. Existing deck (spindle) pulley
5. Spindle

4. Install the new belt cover over the pulley assembly using the 4 previously removed screws (1/4 x 1/2 inch) as shown in Figure 12.

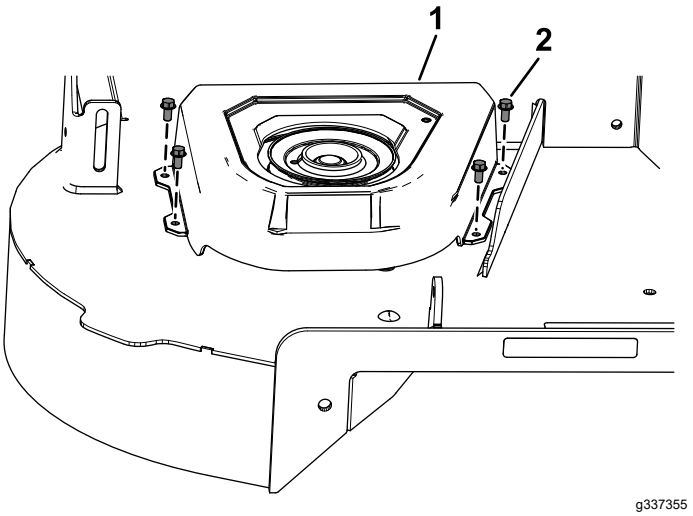

Figure 12

1. Belt cover
2. Screw (1/4 x 1/2 inch)

6

Installing the Blower Assembly

Parts needed for this procedure:

1	Blower assembly

Procedure

⚠ WARNING

An uncovered discharge opening allows the lawn mower to throw objects toward you or bystanders, resulting in serious injury. Also, contact with the blade could occur.

- **Never operate the lawn mower without a cover plate, a mulch plate, or a grass chute and catcher.**
- **Make sure that the grass deflector is installed when you remove the grass chute and catcher.**

Important: **Install the side-discharge chute when you remove the bagger and blower.**

Important: **Save all the hardware and the side-discharge chute.**

1. If necessary, install the belt onto the blower pulley (Figure 15).
2. Insert the blower pivot pin into the blower support and rotate the blower assembly inward toward the machine (Figure 13).

   Note: The blower assembly should automatically latch as shown in Figure 14.

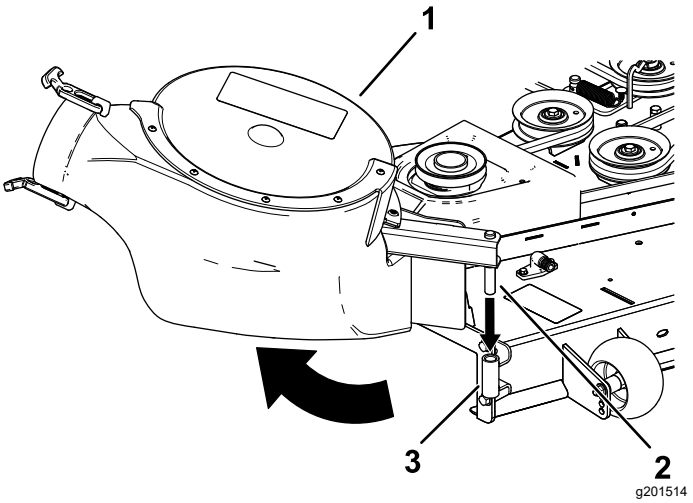

Figure 13

1. Blower assembly
2. Blower pivot pin
3. Blower support

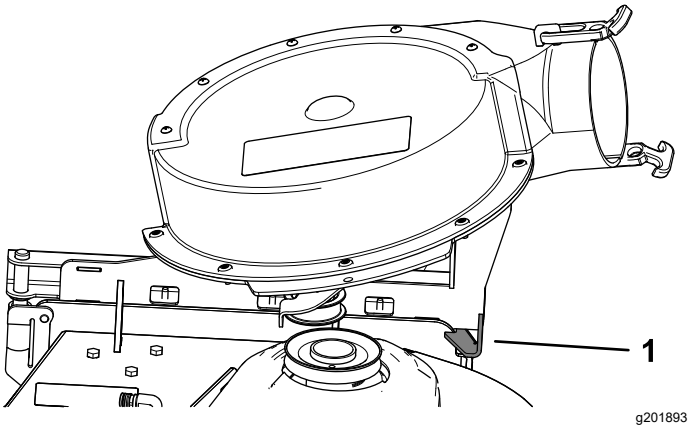

Figure 14

1. Blower latch

7

Installing the Blower Belt and Powered Bagger Cover

Parts needed for this procedure:

1	Powered bagger cover
1	Blower belt

Procedure

1. Install the belt around the blower pulley (Figure 15 and Figure 16); refer to 6 Installing the Blower Assembly (page 13).

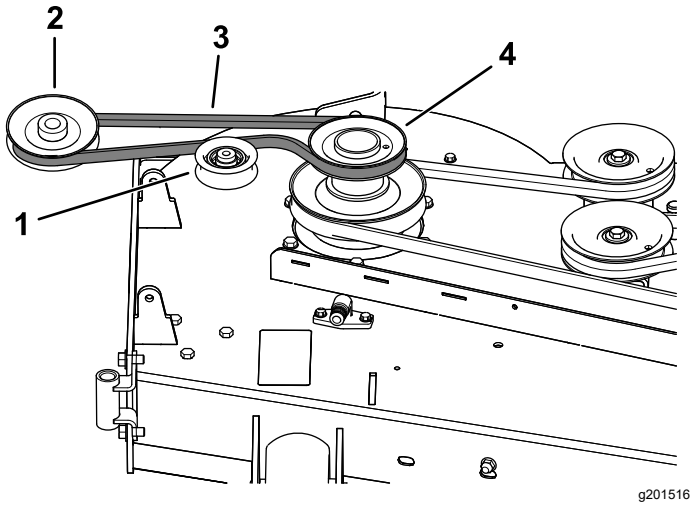

Figure 15

Blower Belt Routing

1. Idler/tension pulley
2. Blower pulley
3. Blower belt
4. Drive pulley

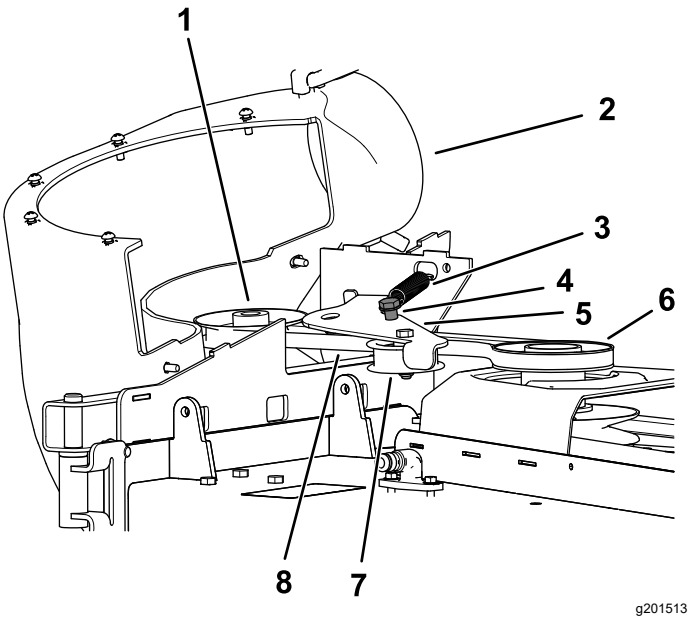

Figure 16

1. Blower pulley
2. Blower in position (housing portion removed for illustrative purposes)
3. Spring
4. Idler-pulley post
5. Idler arm
6. Drive pulley
7. Idler/tension pulley
8. Blower belt

2. Ensure that the belt remains aligned to the blower pulley while you are installing the blower assembly.
3. Pull the spring loaded idler pulley away from the fixed spring post, and route the belt around the mower deck pulley (Figure 16).

   Note: Ensure that the belt is routed around the blower pulley correctly.
4. Route the belt around the drive pulley as illustrated in Figure 15 and Figure 16.
5. Install the powered bagger cover over the belt cover, and secure it by tightening the knob (Figure 17).

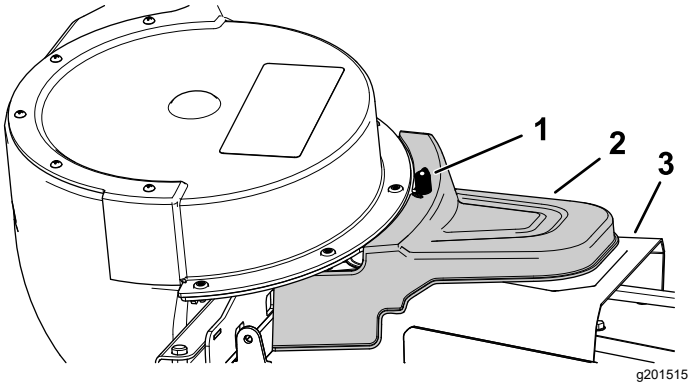

Figure 17

1. Knob
2. Powered bagger cover
3. Belt cover

8

Installing the Bagger Support (If Applicable)

Parts needed for this procedure:

1	Left bagger support
1	Right bagger support
4	Bolt (5/16 x 3-1/4 inches)
4	Flange nut (5/16 inch)
4	Washer

Procedure

1. Remove the bolts and nuts that secure the upper trim to the machine (Figure 18).

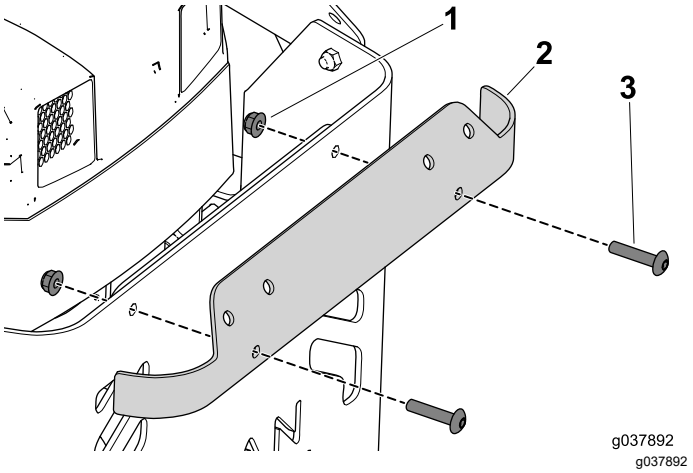

Figure 18

1. Flange nut
2. Upper trim
3. Bolt

2. Remove and discard the bolts and nuts that secure the left side of the rear guard to the frame (Figure 19).

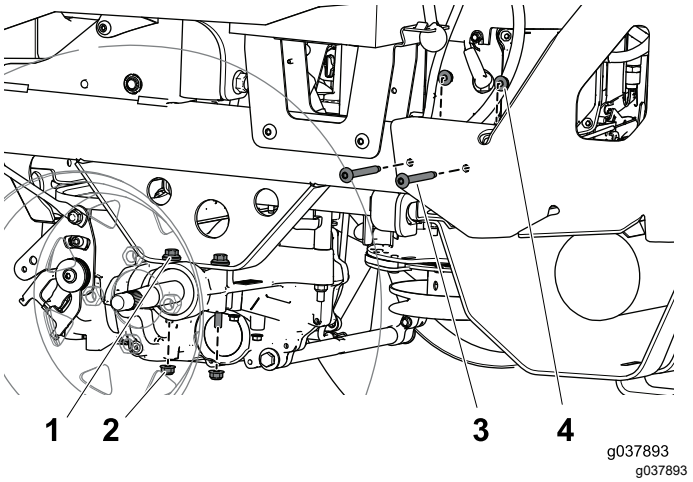

Figure 19

1. Bolt securing the left drive assembly
2. Flange nut securing the left drive assembly
3. Bolt securing the rear guard
4. Flange nut securing the rear guard

3. Remove and set aside the 2 flange nuts that secure the left drive assembly to the frame (Figure 19).

   Note: Do not remove the bolts.

4. Align the holes on the support to the bolts on the drive assembly and loosely install the nuts that you set aside (Figure 20).

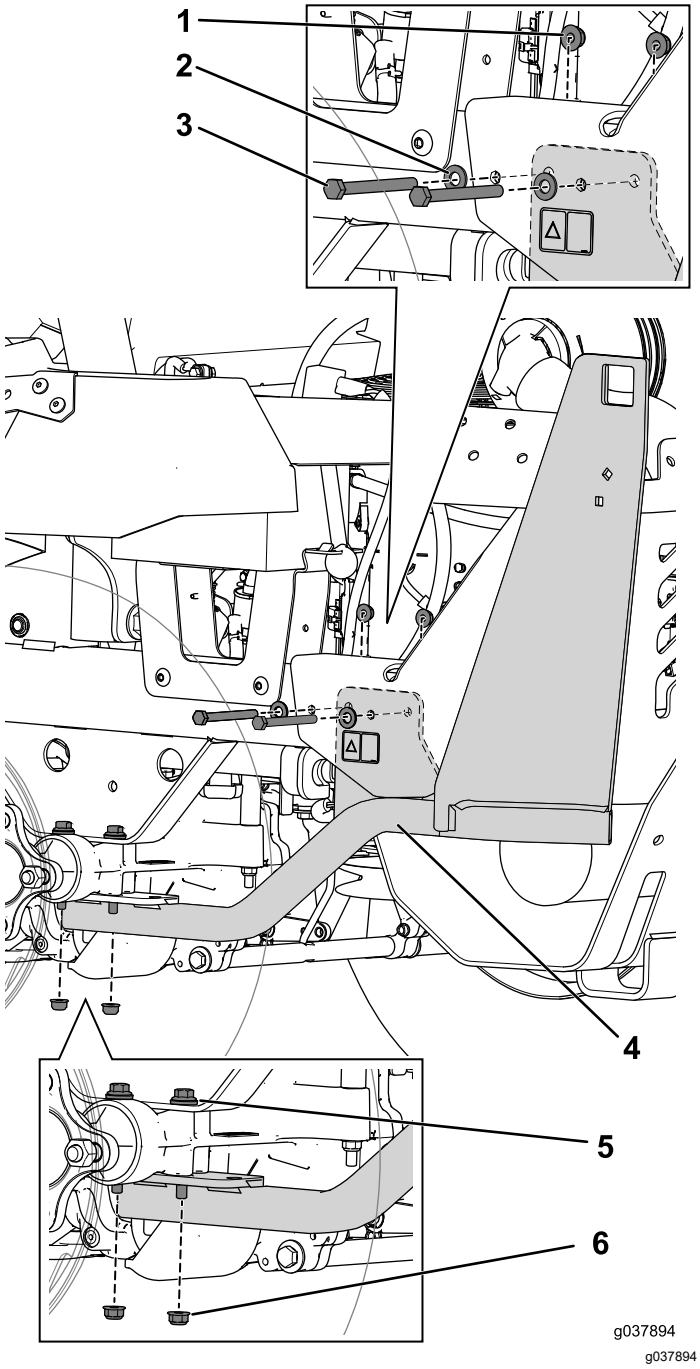

Figure 20

1. Flange nut (5/16 inch)
2. Washer
3. Bolt (5/16 x 3-1/4 inches)
4. Left bagger support
5. Drive-assembly bolt
6. Flange nut (5/16 inch)

5. Use the 2 bolts (5/16 x 3-1/4 inches) and nuts to secure the support to the frame (Figure 20).

   Note: The support mounting tab is installed on the inside of the frame; it does not cover the decal.

6. Tighten all the hardware that you installed.
7. Follow this procedure to install the right support frame.

9

Installing the Transmission Support

Parts needed for this procedure:

1	Transmission support

Procedure

1. Remove the 2 flange nuts from the support bolts on the left and right transmissions and set them aside (Figure 21).

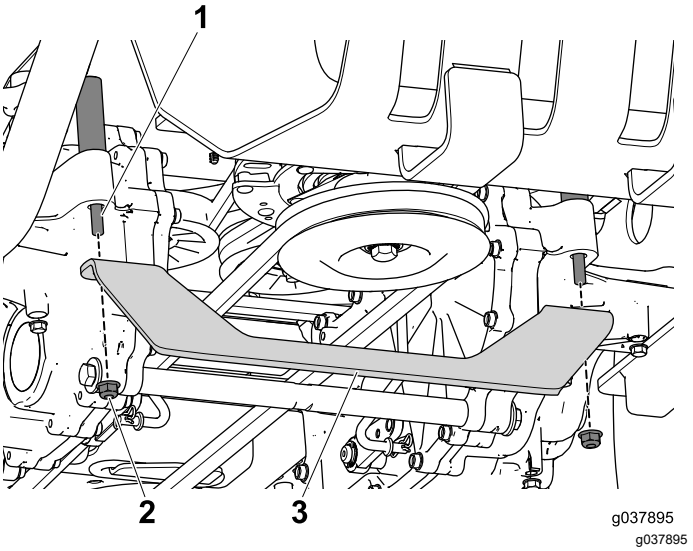

Figure 21

1. Support bolt
2. Flange nut
3. Transmission support

2. Align the bracket to the support bolts and secure them with the 2 flange nuts you removed in the previous step (Figure 21).

10

Installing the Cross Brace

Parts needed for this procedure:

1	Cross brace
4	Hex-head bolt (5/16 x 7/8 inch)
4	Flange nut (5/16 inch)

Procedure

1. Use 2 hex-head bolts (5/16 x 7/8 inch) and flange nuts to secure the cross brace to the left and right bagger support (Figure 22).

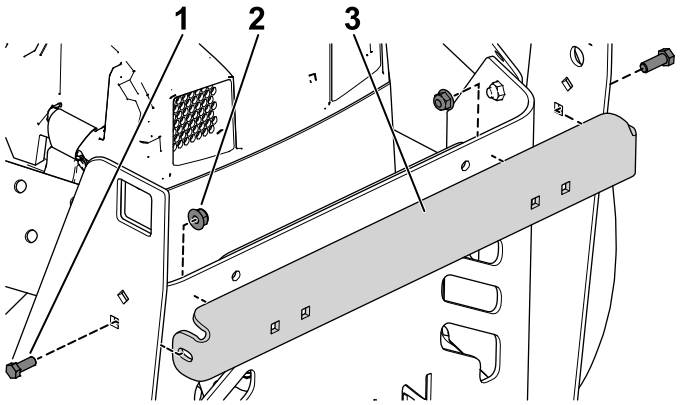

Figure 22

1. Hex-head bolt (5/16 x 7/8 inch)
2. Flange nut (5/16 inch)
3. Cross brace

2. Use 2 hex-head bolts (5/16 x 7/8 inch) and flange nuts to secure the cross brace to the rear guard (Figure 23).

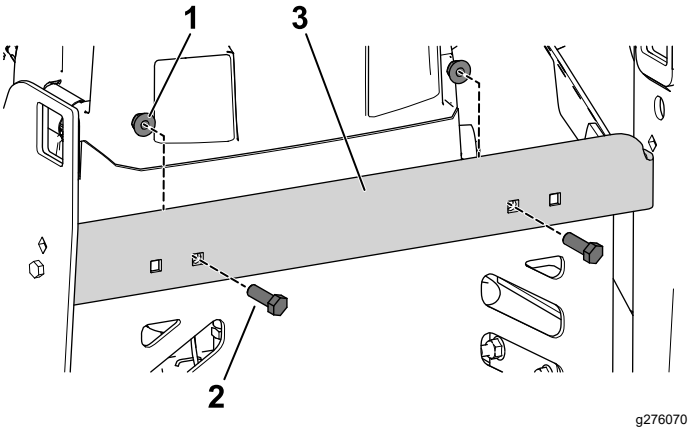

Figure 23

1. Flange nut (5/16 inch)
2. Hex-head bolt (5/16 x 7/8 inch)
3. Cross brace

11

Installing the Pivot Assembly

Parts needed for this procedure:

1	Pivot assembly
1	Hairpin cotter

Procedure

1. Slide the square end of the pivot assembly through the opening in the left bagger support and the post through the right support (Figure 24).

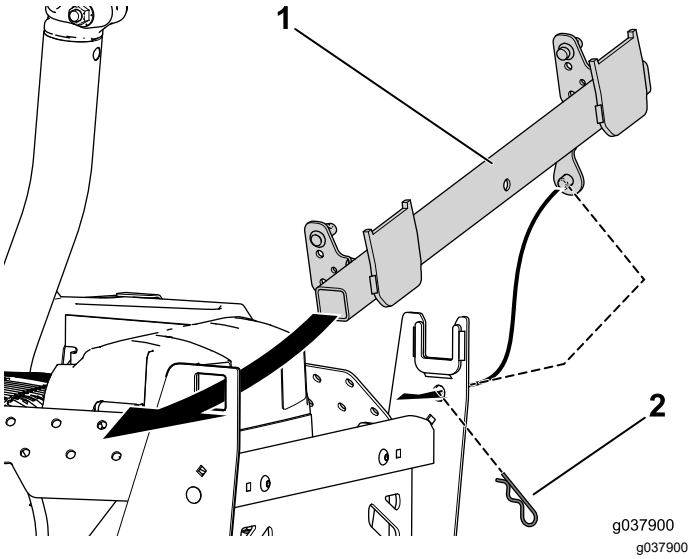

Figure 24

1. Pivot assembly
2. Hairpin cotter

2. Install the hairpin cotter into the post to secure the pivot assembly to the bagger support (Figure 24).

12

Installing the Hold-Down Rod

Parts needed for this procedure:

1	Hold-down rod
1	Hairpin cotter

Procedure

1. Install hold-down rod to the pivot assembly (Figure 25).

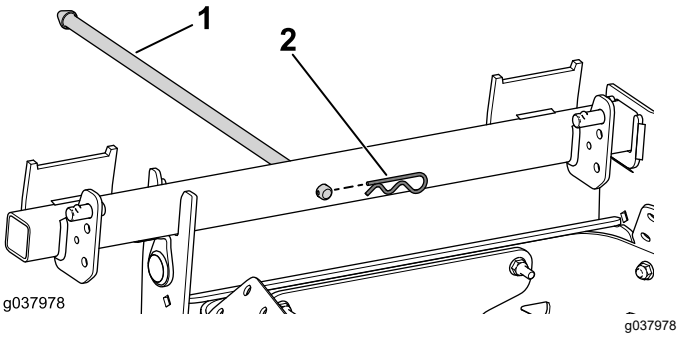

Figure 25

1. Hold-down rod
2. Hairpin cotter

2. Use the hairpin cotter to secure the rod into the pivot assembly (Figure 25).

13

Assembling the Hood

Parts needed for this procedure:

1	Hood
1	Grass screen
2	Hairpin cotter

Procedure

Use the 2 hairpin cotters to secure the grass screen to the hood (Figure 26).

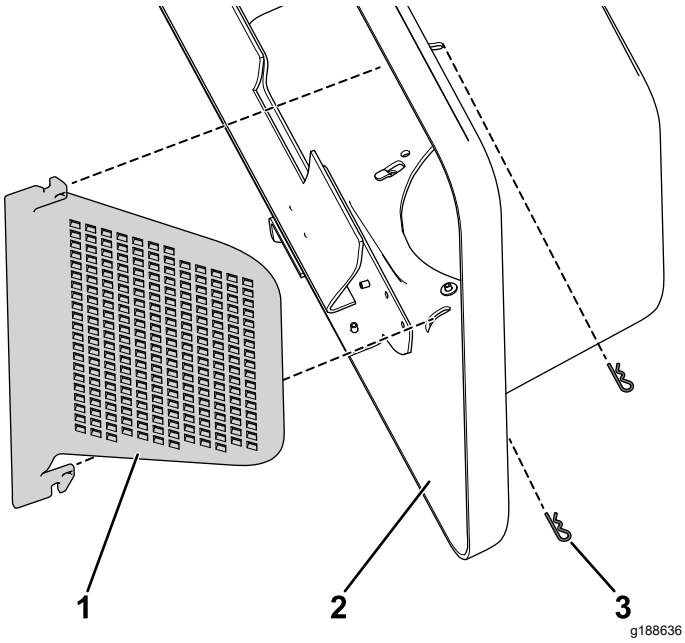

Figure 26

1. Grass screen
2. Hood
3. Hairpin cotter

14

Installing the Hood

Parts needed for this procedure:

1	Hood assembly

Procedure

1. Align the key-hole feature on the pivot bracket to the key on the pivot pin and slide it into position (Figure 27).

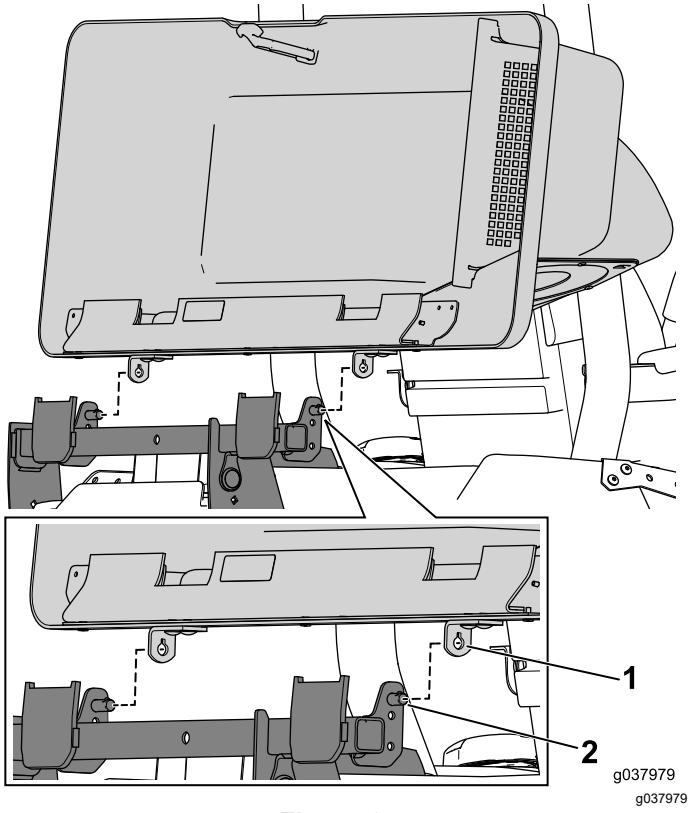

Figure 27

1. Pivot bracket
2. Pivot pin

2. Rotate the hood to capture it with the pivot pin.

15

Installing the Bags

Parts needed for this procedure:

2	Bag

Procedure

Hook the bag over the pivot assembly (Figure 28).

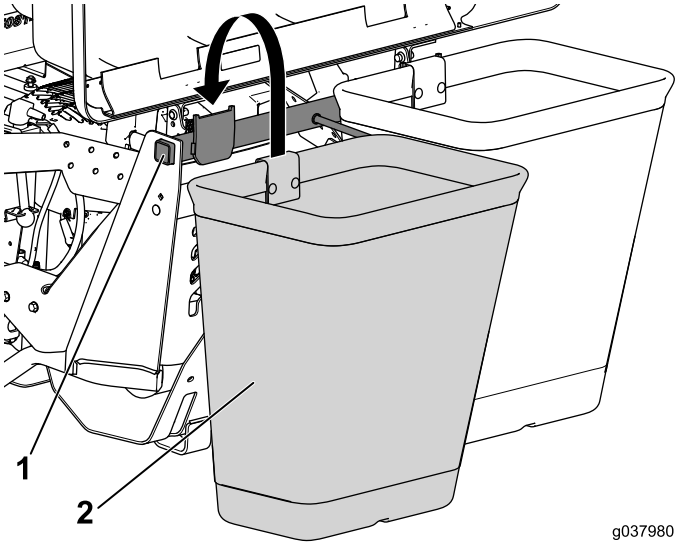

Figure 28

1. Bag
2. Pivot assembly

16

Installing the Hitch Cover

Parts needed for this procedure:

1	Hitch cover

Procedure

1. Apply a lubricant to the nipple on the hitch cover.
2. Align the hitch cover over the hitch and press it into place (Figure 29).

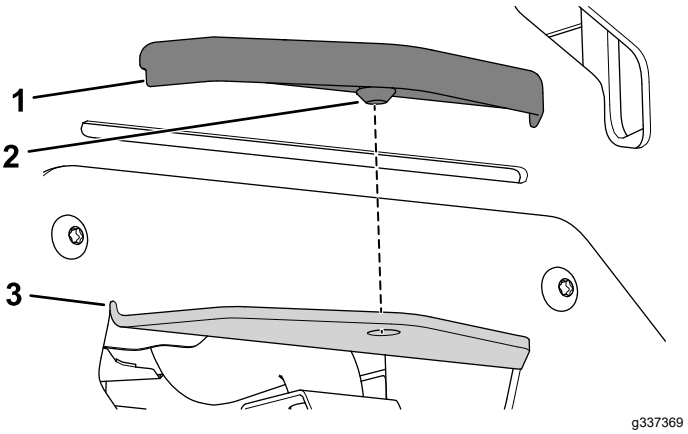

Figure 29

1. Hitch cover
2. Nipple
3. Hitch

17

Installing the Discharge Tubes

Parts needed for this procedure:

1	Upper tube
2	Screw (1/4 x 3/4 inches)
2	Washer (1/4 inch)
2	Locknut (1/4 inch)
1	Lower tube

Procedure

Important: **Ensure that the mower deck is at the lowest height of cut before installing the discharge tubes.**

1. Lower the mower deck to the lowest height-of-cut position.
2. Remove the bags for viewing the tube under the hood.
3. Lower and latch the hood.
4. Use both latches to attach the lower tube to the blower assembly (Figure 30).

   Note: Ensure that the notch in the lower tube is at the bottom when installed (Figure 32).

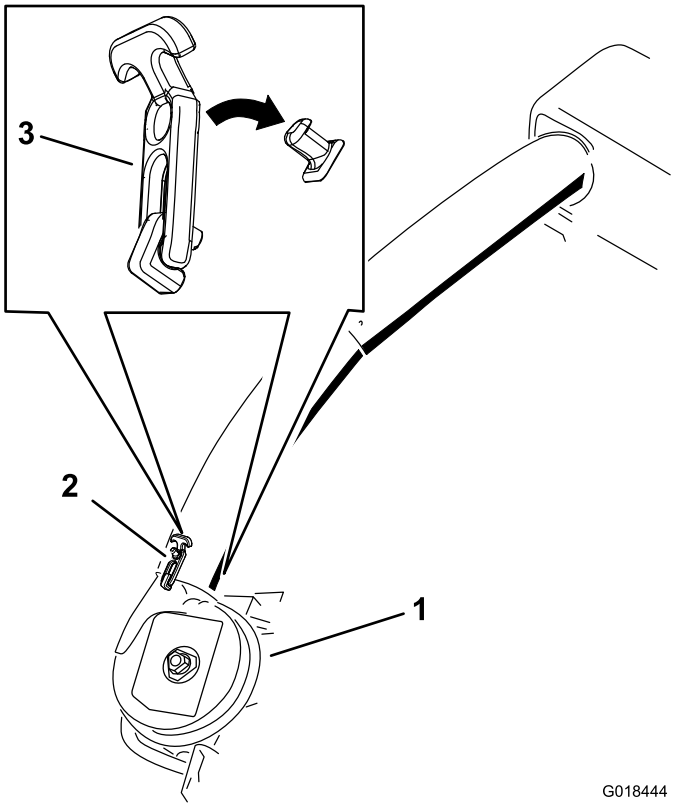

Figure 30
Lower Discharge Tube Latch

1. Blower assembly
2. Upper latch
3. Latch

5. Make note of where the 2 bolts in the upper tube are installed.

   Note: The hole near the molded arrowheads will not be used.
6. Remove the 2 bolts in the lower end of the upper tube.
7. Use the 2 holes as a template for the lower tube.

   Note: Retain the hardware.
8. Insert the upper end (no holes) of the upper tube through the tube seal in the hood by pushing the tube in until the tube contacts the inside of the hood.
9. Pull the upper tube out slightly so that the seal extends outward and over the lower tube (Figure 31).

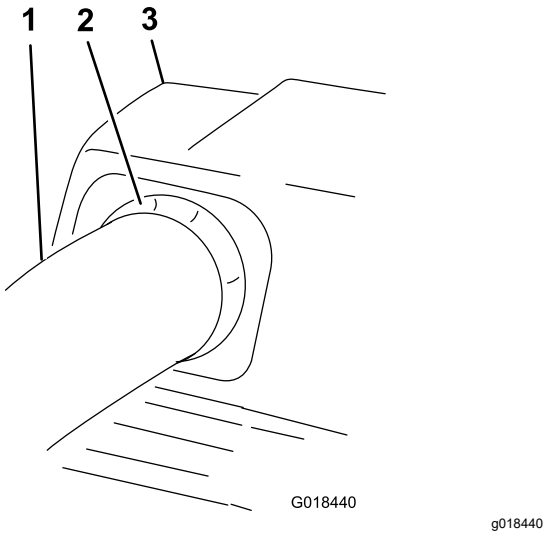

Figure 31

1. Upper tube
2. Rubber seal protruding out
3. Bagger hood

10. Align the upper tube holes to match the dimples on the surface of the lower tube.

    Note: Ensure that the side profile appears as shown in Figure 32.

    Note: Do not use the open hole near the molded arrowheads.

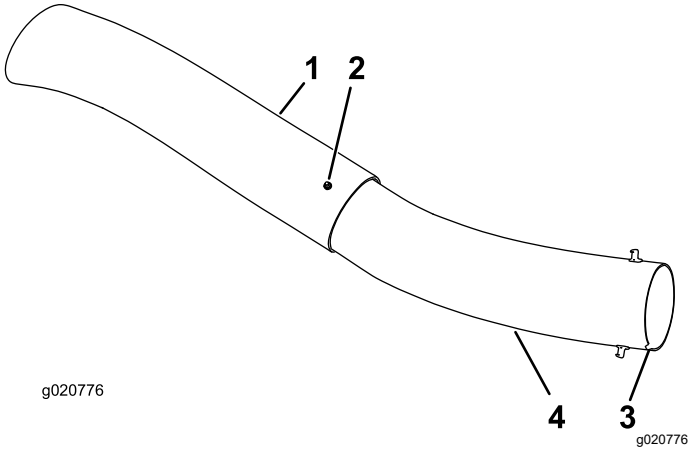

Figure 32

1. Upper tube
2. Existing hole (bolt removed)
3. Notch at the bottom of the tube when installed
4. Lower tube

11. Using the existing holes in the upper tube as a template, drill 2 holes, 6.5 mm (1/4 inch) diameter, through the dimples on the lower tube (Figure 33).

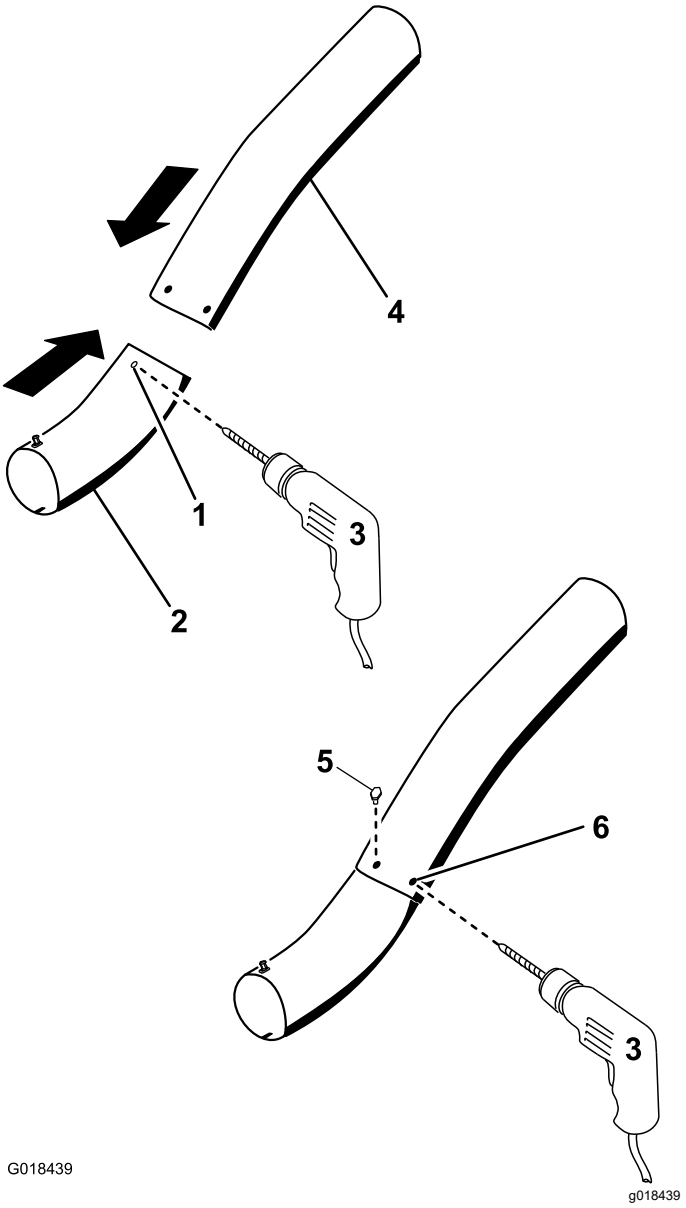

Figure 33

Drilling Lower Discharge Tube

1. Dimples
2. Lower tube
3. Drill 6.5 mm (1/4 inch) diameter hole
4. Upper tube
5. Install screw (1/4 x 3/4 inch), washer (1/4 inch), and locknut (1/4 inch) here.
6. Upper tube—existing holes

12. Remove the upper and lower tubes from the machine.
13. Slide the tubes together and align the holes.
14. Install the washers (1/4 inch) onto the bolts (Figure 33).
15. Using a hex key tool, install the screws (1/4 x 3/4 inch) and washers (1/4 inch) from the inside of the lower tube and through the existing holes in the upper tube (Figure 33).

16. Secure the tubes together with the nuts (1/4 inch) as shown in Figure 33.
17. Insert the upper discharge tube through the tube seal in the hood.
18. Pull the upper tube out slightly so that the seal extends outward and over the blower assembly (Figure 31).
19. Use both latches to attach the lower tube to the blower assembly (Figure 30).

18

Adjusting the Parking Brake

No Parts Required

Procedure

Check to ensure that the parking brake is adjusted properly. Refer to your *Operator's Manual* for the correct procedure.

19

Checking the Tire Pressure

No Parts Required

Procedure

Increase the tire pressure due to the additional weight.

Note: This is not applicable with semi-pneumatic tires.

Check and increase the air pressure in the front caster wheels and rear tires (Figure 34).

Air pressure in the rear tires: 138 kPa (20 psi)

Air pressure in the front caster wheels: 172 kPa (25 psi)

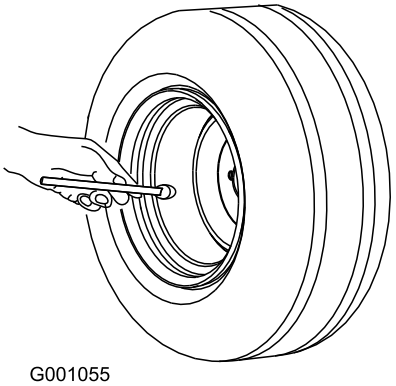

Figure 34

Operation

⚠ WARNING

To avoid personal injury, do the following:

- **Become familiar with all operating and safety instructions in the *Operator's Manual* for the mower before using this attachment.**
- **Never remove the discharge tube, bags, bagger top, or the chute while the engine is running.**
- **Always shut the engine off and wait for all moving parts to stop before clearing an obstruction from the bagging system.**
- **Never perform maintenance or make repairs while the engine is running.**

⚠ WARNING

Without the grass deflector, bagger tubes or complete bagger assembly mounted in place, you and others are exposed to blade contact and thrown debris. Contact with the rotating mower blade(s) and thrown debris will cause injury or death.

- **Always install the grass deflector when removing the bagger and changing to side discharge mode.**
- **If the grass deflector is ever damaged, replace it immediately. The grass deflector routes material down toward the turf.**
- **Never put your hands or feet under the mower.**
- **Never try to clear the discharge area or mower blades unless you move the power take off (PTO) to off and rotate the ignition key to off. Also remove the key and pull the wire off of the spark plug(s).**
- **Turn off the engine before unclogging the discharge chute.**

Emptying the Grass Bags

⚠ DANGER

Debris, such as leaves, grass, or brush can catch fire. A fire in the engine area can cause personal injury and property damage.

- **Keep the engine and muffler area free of debris accumulation.**
- **Take care when opening the bagger cover to keep debris from falling onto the engine and muffler area.**
- **Allow the machine to cool before storing it.**

1. Park the machine on a level surface.
2. Move the motion-control levers to the NEUTRAL-LOCK position.
3. Engage the parking brake, shut off the engine, and remove the key.
4. Open (raise) the bagger top (Figure 35).

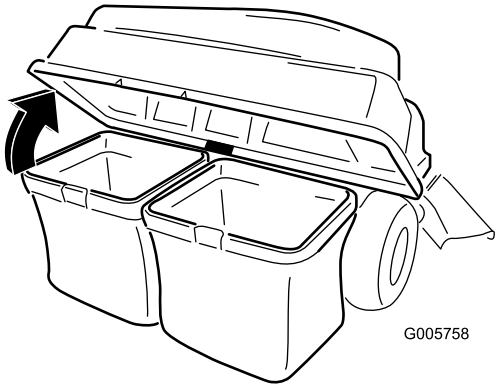

g005758

Figure 35

5. Compress debris into the bags. With both hands, lift up on the bag and unhook it from the retaining bracket. Empty the bag. Repeat the procedure for the other bag.
6. Install the bags by sliding the bag frame hooks onto the retaining brackets.
7. Lower the bagger top onto the bags.

Clearing Obstructions from the Bagger

⚠ WARNING

When the bagger is in operation, the blower is rotating and can cut off or injure hands and fingers.

- **Before adjusting, cleaning, repairing and inspecting the blower, and before unclogging the chute, shut off the engine and wait for all moving parts to stop. Remove the key.**
- **Use a stick or similar object, not your hands, to remove an obstruction from the blower and tube.**
- **Keep your face, hands, feet, and any other part of your body or clothing away from concealed, moving, or rotating parts.**

1. Park the machine on a level surface and disengage the blade control switch.
2. Move the motion control levers outward to the neutral lock position, stop the engine, remove the key, set the parking brake and wait for all moving parts to stop before leaving the operating position.
3. Check the grass bags and empty them if they are full.
4. Remove and separate the discharge tube and chute from the bagger top and mower. Using a stick or similar object, carefully remove and clear the obstruction from the mower, discharge tube, chute, and the bagger top.
5. After you remove the obstruction, install the complete bagger system and resume operation.

Removing the Bagger

⚠ CAUTION

Failing to remove the front bagger weights and operating the machine without the bagger attachment may cause an unstable condition, which could result in a loss of control.

- **Always remove the front weights when removing the bagger attachment.**
- **Never operate the machine without the bagger attachment and the front weights installed.**

You can remove the bagger by repeating the Setup sections from all installed bagger related kits in reverse order. If weights are installed, always remove the front bagger weights when removing the bagger attachments.

Note: It is necessary only to remove the cutoff baffle when installing a mulching kit.

Operating Tips

Tips for Bagging

Remembering the Size of the Machine with the Attachment

Remember that the machine is longer and wider with this attachment installed. By turning too sharply in confined places, you may damage the attachment.

Trimming

Always trim with the left side of the mower. Do not trim with the right side of the mower because you could damage the bagger chute and discharge tube.

Cutting Height

Do not set the mower cutting height too low because long grass surrounding the mower can prevent air from getting under the mower and entering the bagging system. If enough air does not get under the mower, the bagging system will plug.

Cutting Frequency

Cut the grass often, especially when it grows rapidly. You will have to cut your grass twice if it gets excessively long.

Cutting Technique

For best lawn appearance, be sure to slightly overlap the mower into the previously cut area. This helps reduce the load on the engine and reduces the chance of plugging the chute and discharge tube.

Bagging Speed

Most often you will bag with the mower throttle in the FAST position and drive at a normal ground speed. However, in extremely dry and dusty grass, you may want to slightly reduce the throttle speed and increase the ground speed of the mower. The bagging system may plug if you drive too fast and the engine speed gets too slow. On hills, it may be necessary to slow the mower ground speed. This helps maintain the engine speed and bagging efficiency. Mow downhill whenever possible.

⚠ CAUTION

As the bagger fills, extra weight is added to the back of the machine. If you stop and start suddenly on hills, you may lose steering control or the machine may tip.

- **Do not start or stop suddenly when going uphill or downhill. Avoid uphill starts.**
- **If you do stop the machine when going uphill, disengage the blade control. Then back down the hill using a slow speed.**
- **Avoid sudden turns or rapid speed changes on slopes.**
- **Never operate the machine without the bagger attachment and the front weights installed.**

Bagging Long Grass

Excessively long grass is heavy and may not be propelled completely into the grass bags. If this happens, the discharge tube and chute may plug. To avoid plugging the bagging system, mow the grass at a high height of cut, then lower the mower to your normal cutting height and repeat the bagging process.

Bagging Wet Grass

Always try to cut grass when it is dry because your lawn will have a neat appearance. If you must cut wet grass, use the conventional side-discharge feature of the mower. Several hours later, when the clippings are dry, install the complete bagger attachment and vacuum up the grass clippings.

Signs of Plugging

As you are bagging, a small amount of grass clippings normally blow out the front of the mower. An excessive amount of clippings blowing out indicates that the bags are full or the system is plugged.

Maintenance

Note: Determine the left and right sides of the machine from the normal operating position.

Recommended Maintenance Schedule(s)

Maintenance Service Interval	Maintenance Procedure
After the first 8 hours	• Inspect the blower belt. • Inspect the bagger.
After each use	• Clean the hood screen. • Clean the bagger.
Every 25 hours	• Inspect the blower belt.
Every 100 hours	• Inspect the bagger.

⚠ WARNING

If you leave the key in the key switch, someone could accidently start the engine and seriously injure you or other bystanders.

Remove the key and disconnect the wire from the spark plug before you do any maintenance. Set the wire aside so that it does not accidentally contact the spark plug.

⚠ WARNING

Engines can become hot when they are operating. Severe burns can occur from contacting hot surfaces.

Allow engines, especially the muffler, to cool before touching.

⚠ WARNING

Debris, such as leaves, grass, or brush can catch fire. A fire in the engine area can cause personal injury and property damage.

- **Keep the engine and muffler area free of debris accumulation.**
- **Take care when opening the bagger cover to keep debris from falling onto the engine and muffler area.**
- **Allow the machine to cool before storing it.**

Preparing for Maintenance

Do the following steps before preforming maintenance on the machine:

1. Park the machine on a level surface.
2. Disengage the PTO, move the motion control levers to the NEUTRAL-LOCK position, and engage the parking brake.
3. Shut off the engine and remove the key.
4. Clean the mower of any debris on the deck or rear part of the mower to ease maintenance.

Cleaning the Hood Screen

Service Interval: After each use

1. Open the bagger hood.
2. Clean the debris from the screen.
3. Close the bagger hood.

Cleaning the Bagger and Bags

Service Interval: After each use

1. Wash the inside and outside of the bagger hood, bags, tube, and the underside of the mower.

   Note: Use a mild automotive detergent to remove dirt.
2. Make sure that you remove matted grass from all parts.
3. After washing all parts, let them dry thoroughly.

Note: With all parts installed, start and run the machine for a minute to assist in drying.

Inspecting the Blower Belt

Service Interval: After the first 8 hours

Every 25 hours

Check belts for cracks, frayed edges, burn marks or any other damage. Replace damaged belts.

Replacing the Blower Belt

1. Remove the plastic belt cover.
2. Pull back on the spring-loaded idler pulley to relieve the belt tension (Figure 36).

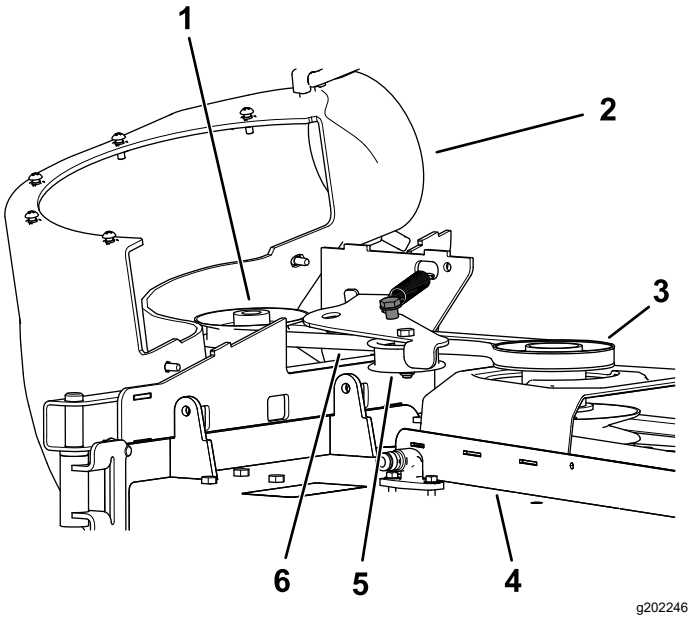

Figure 36

1. Blower pulley
2. Blower in position (housing portion removed for illustrative purposes)
3. Drive pulley
4. Mower deck
5. Idler/tension pulley
6. Blower belt

3. Remove the existing bagger belt from the mower-deck pulley.
4. Remove the blower from the mower deck.
5. Remove the existing bagger belt from the blower pulleys.
6. Install the new belt around the blower pulleys (Figure 36).
7. Install the blower onto the blower support.
8. Install the new belt around the mower-deck pulley (Figure 36).
9. Pull back on the spring loaded idler pulley and install the belt onto the spring-loaded idler pulley (Figure 36).

Inspecting the Bagger

Service Interval: Every 100 hours

After the first 8 hours

1. Check the upper tube, lower tube, bagger hood, and the blower assembly.

   Note: Replace these parts if they are cracked or broken.
2. Check the bags, bagger frame, and screen.

   Note: Replace any parts that are cracked or broken.
3. Tighten all nuts bolts and screws.

Inspecting the Mower Blades

1. Inspect the mower blades regularly and whenever a blade strikes a foreign object.
2. If blades are badly worn or damaged, install new blades; refer to your machine *Operator's Manual* for complete blade maintenance.

Replacing the Grass Deflector

⚠ WARNING

An uncovered discharge opening could allow the machine to throw objects toward you or bystanders, resulting in serious injury. Also, contact with the blade could occur.

Never operate the machine unless you install a mulch plate, discharge deflector, or grass collection system.

1. Disengage the spring from the notch in the deflector bracket and slide the rod out of the welded deck brackets, spring, and discharge deflector (Figure 37).

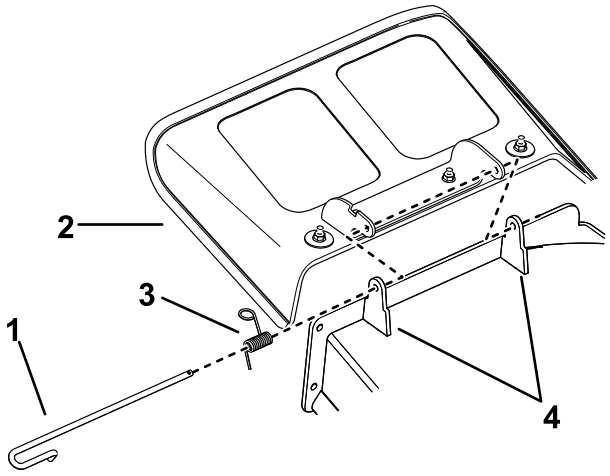

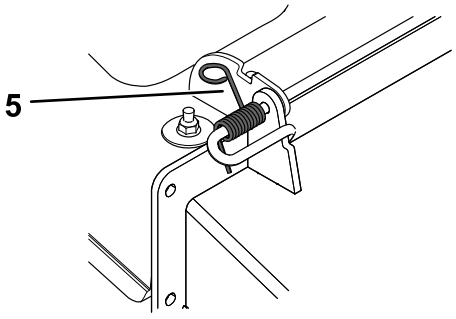

g297555

Figure 37

1. Rod
2. Spring
3. Deflector
4. Deck brackets
5. Spring installed over the rod

2. Remove the damaged or worn discharge deflector.

3. Position the new discharge deflector with the bracket ends between the welded brackets on the deck as shown in Figure 38.
4. Install the spring onto the straight end of the rod.
5. Position the spring on the rod as shown in Figure 38 so that the shorter spring end comes from under the rod before the bend and going over the rod as it returns from the bend.
6. Lift the loop end of the spring and place it into the notch on the deflector bracket (Figure 38).

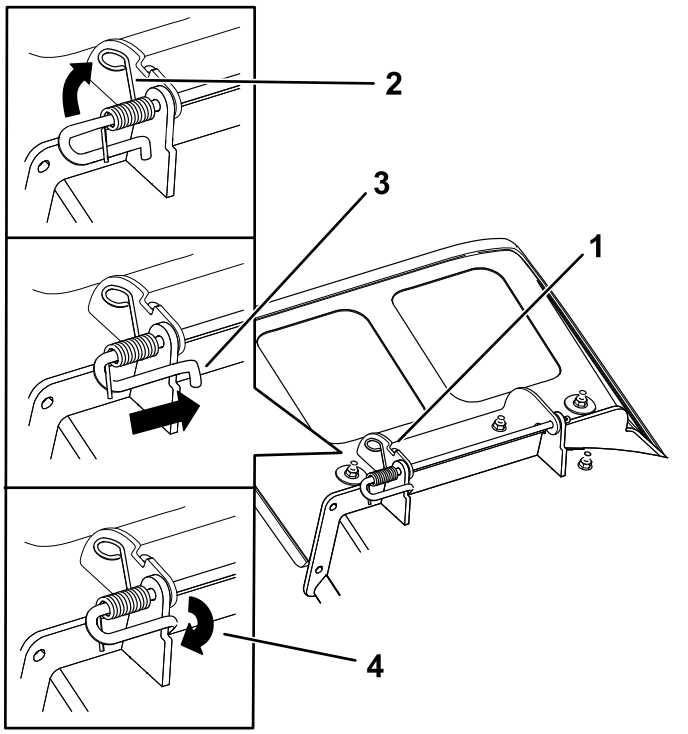

g297573

Figure 38

1. Rod and spring assembly installed
2. Loop end of the spring installed into the notch in the deflector bracket
3. Rod, short end, moved behind the mower bracket
4. Short end, retained by mower bracket.

7. Secure the rod and spring assembly by twisting it so that the short end of the rod is behind the front bracket welded to the deck (Figure 38).

   Important: **The grass deflector must be spring loaded in the down position. Lift the deflector up to test that it snaps to the full down position.**

Storage

Storing the Bagger Attachment

1. Clean the bagger attachment; refer to Cleaning the Bagger and Bags (page 28).
2. Inspect the bagger attachment for damage; refer to Inspecting the Bagger (page 28).
3. Ensure that the grass bags are empty and thoroughly dry.
4. Store the bagger in a clean, dry place, out of direct sunlight. This protects the plastic parts and extends the life of the bagger. If you must store the bagger outside, cover it with a weatherproof cover.

Troubleshooting

Problem	Possible Cause	Corrective Action
There is abnormal vibration.	1. The cutting blade(s) are bent or unbalanced. 2. The blade-mounting bolt is loose. 3. There is a loose blower pulley or pulley assembly. 4. The bagger belt is worn. 5. The blower fan blade(s) are bent or unbalanced.	1. Install new cutting blade(s). 2. Tighten the blade-mounting bolt. 3. Tighten the appropriate pulley. 4. Replace the belt. 5. Contact an Authorized Service Dealer.
Reduced bagging performance	1. The engine speed is too low. 2. The screen in the bagger hood is plugged. 3. The bagger belt is loose. 4. There is a plugged tube or blower. 5. The bags are full.	1. Always operate the engine at full throttle. 2. Remove debris, leaves, or grass clippings from the screen. 3. Replace the bagger belt. 4. Locate and remove the plugged debris. 5. Empty the hopper.
The blower and tubes plug too frequently.	1. The bags are too full. 2. The engine speed is too low. 3. The grass is too wet. 4. The grass is too long. 5. The screen in the bagger hood is plugged. 6. The ground speed is too fast. 7. The bagger belt is worn.	1. Dump more frequently. 2. Always operate the engine at full throttle. 3. Cut grass when it is dry. 4. Cut no more than 51 to 76 mm (2 to 3 inches) or 1/3 of the grass height, whichever is less. 5. Remove debris, leaves, or grass clippings from the screen. 6. Drive slower at full throttle. 7. Replace the belt.
Debris blowout	1. The bags are too full. 2. The ground speed is too fast. 3. The mower deck is not leveled.	1. Dump more frequently. 2. Drive the machine at slow ground speed while operating the engine at full throttle. 3. See the machine *Operator's Manual* for leveling the mower deck.
The blower impeller does not spin freely.	1. The blower is plugged. 2. The impeller is not aligned.	1. Remove debris, leaves, or grass clippings from the blower impeller. 2. Contact an Authorized Service Dealer.

Notes:

Notes:

EEA/UK Privacy Notice

Toro's Use of Your Personal Information

The Toro Company ("Toro") respects your privacy. When you purchase our products, we may collect certain personal information about you, either directly from you or through your local Toro company or dealer. Toro uses this information to fulfil contractual obligations - such as to register your warranty, process your warranty claim or to contact you in the event of a product recall - and for legitimate business purposes - such as to gauge customer satisfaction, improve our products or provide you with product information which may be of interest. Toro may share your information with our subsidiaries, affiliates, dealers or other business partners in connection these activities. We may also disclose personal information when required by law or in connection with the sale, purchase or merger of a business. We will never sell your personal information to any other company for marketing purposes.

Retention of your Personal Information

Toro will keep your personal information as long as it is relevant for the above purposes and in accordance with legal requirements. For more information about applicable retention periods please contact legal@toro.com.

Toro's Commitment to Security

Your personal information may be processed in the US or another country which may have less strict data protection laws than your country of residence. Whenever we transfer your information outside of your country of residence, we will take legally required steps to ensure that appropriate safeguards are in place to protect your information and to make sure it is treated securely.

Access and Correction

You may have the right to correct or review your personal data, or object to or restrict the processing of your data. To do so, please contact us by email at legal@toro.com. If you have concerns about the way in which Toro has handled your information, we encourage you to raise this directly with us. Please note that European residents have the right to complain to your Data Protection Authority.

California Proposition 65 Warning Information

What is this warning?

You may see a product for sale that has a warning label like the following:



WARNING: Cancer and Reproductive Harm—www.p65Warnings.ca.gov.

What is Prop 65?

Prop 65 applies to any company operating in California, selling products in California, or manufacturing products that may be sold in or brought into California. It mandates that the Governor of California maintain and publish a list of chemicals known to cause cancer, birth defects, and/or other reproductive harm. The list, which is updated annually, includes hundreds of chemicals found in many everyday items. The purpose of Prop 65 is to inform the public about exposure to these chemicals.

Prop 65 does not ban the sale of products containing these chemicals but instead requires warnings on any product, product packaging, or literature with the product. Moreover, a Prop 65 warning does not mean that a product is in violation of any product safety standards or requirements. In fact, the California government has clarified that a Prop 65 warning "is not the same as a regulatory decision that a product is 'safe' or 'unsafe.'" Many of these chemicals have been used in everyday products for years without documented harm. For more information, go to https://oag.ca.gov/prop65/faqs-view-all.

A Prop 65 warning means that a company has either (1) evaluated the exposure and has concluded that it exceeds the "no significant risk level"; or (2) has chosen to provide a warning based on its understanding about the presence of a listed chemical without attempting to evaluate the exposure.

Does this law apply everywhere?

Prop 65 warnings are required under California law only. These warnings are seen throughout California in a wide range of settings, including but not limited to restaurants, grocery stores, hotels, schools, and hospitals, and on a wide variety of products. Additionally, some online and mail order retailers provide Prop 65 warnings on their websites or in catalogs.

How do the California warnings compare to federal limits?

Prop 65 standards are often more stringent than federal and international standards. There are various substances that require a Prop 65 warning at levels that are far lower than federal action limits. For example, the Prop 65 standard for warnings for lead is 0.5 µg/day, which is well below the federal and international standards.

Why don't all similar products carry the warning?

- Products sold in California require Prop 65 labelling while similar products sold elsewhere do not.
- A company involved in a Prop 65 lawsuit reaching a settlement may be required to use Prop 65 warnings for its products, but other companies making similar products may have no such requirement.
- The enforcement of Prop 65 is inconsistent.
- Companies may elect not to provide warnings because they conclude that they are not required to do so under Prop 65; a lack of warnings for a product does not mean that the product is free of listed chemicals at similar levels.

Why does Toro include this warning?

Toro has chosen to provide consumers with as much information as possible so that they can make informed decisions about the products they buy and use. Toro provides warnings in certain cases based on its knowledge of the presence of one or more listed chemicals without evaluating the level of exposure, as not all the listed chemicals provide exposure limit requirements. While the exposure from Toro products may be negligible or well within the "no significant risk" range, out of an abundance of caution, Toro has elected to provide the Prop 65 warnings. Moreover, if Toro does not provide these warnings, it could be sued by the State of California or by private parties seeking to enforce Prop 65 and subject to substantial penalties.



Count on it.