Please read and save these instructions. Read carefully before attempting to assemble, install, operate or maintain the product described. Protect yourself and others by observing all safety information. Failure to comply with instructions could result in personal injury and/or property damage! Retain instructions for future reference.

Dayton® Portable Oil-Fired Heater

Description

Dayton Model 3VE53B heater is a 400,000 BTU/Hr heater.
This heater use 1-K Kerosene (see Operation section for alternative fuels) for combustion, and electricity to run the fan. It is primarily intended for temporary heating of well ventilated buildings under construction, alteration, or repair. This heater may be used in agricultural, industrial and commercial environments.

Figure 1 – Model 3VE53B

Specifications

ELECTRICAL SPECIFICATIONS

Model	Electrical Input	Amperage	Fuse	Spark Plug Gap
3VE53B	120V, 60 Hz	3.0	250V/ 8 amp	0.1" (2.5mm)

GENERAL SPECIFICATIONS

Model	Type of Fuel	Input Rating	Pump Pressure	Fuel Tank Capacity	Fuel Consumption	Size L x W x H (Inches)	Weight Lbs. (kg)
3VE53B	1-K Kerosene	400,000 BTU/Hr	130 PSI	24 Gallons	3.0 Gal/Hr	53" x 30" x 36"	150 (68kg)

Table of Contents **Page**

Description 1
Specifications 1
Introduction 1
Unpacking 1
Product Features 2
General Safety Information 2-3
Assembly 4-5
Operation 5-8
Kerosene (1-K or Number 1 Fuel Oil) 5-6
Overview of Heater Design. 6
Fueling Your Heater 6
Ventilation 6
Electrical outlet 7
Long-Term Storage 7-8
Maintenance 10
Wiring Diagrams 11
Repair Parts Illustration 12
Repair Parts List 12-13
Troubleshooting Chart 14-15
Warranty Information 16

Introduction

Please read this USER'S MANUAL carefully. It will show you how to assemble, maintain and operate this heater safely and efficiently to obtain the full benefits of its many features.

Consumer: Retain these instructions for future reference.

Unpacking

1. Remove all packing items applied to heater for shipment.
2. Remove all items from carton.
3. Check all items for shipping damage. If heater is damaged, promptly inform dealer where you purchased heater.

General Safety Information

⚠ DANGER ***Indicates an imminently hazardous situation which, if not avoided, WILL result in death or serious injury.***

⚠ WARNING ***Indicates a potentially hazardous situation which, if not avoided, COULD result in death or serious injury.***

⚠ CAUTION ***Indicates a potentially hazardous situation which, if not avoided, MAY result in minor or moderate injury.***

⚠ WARNING ***Before using this heater, please read this USER'S MANUAL very carefully. This USER'S MANUAL has been designed to instruct you as to the proper manner in which to assemble, maintain, store, and most importantly, how to operate the heater in a safe and efficient manner.***

CSA® US

Form 5S4857

Printed in Korea
09663
1005/367/VCPVP

PIN008
05/05

Dayton®

Dayton® Portable Oil-Fired Heater

Dimensions

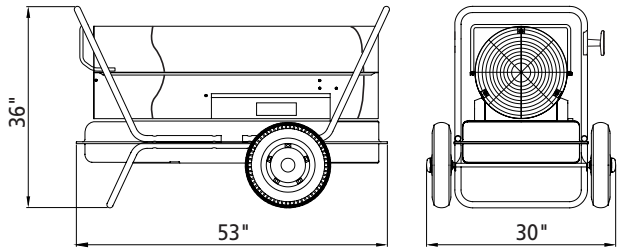

Model 3VE53B

	Dimension
H	36”
L	53”
W	30”

Figure 2 – Heater Dimensions

Product Features

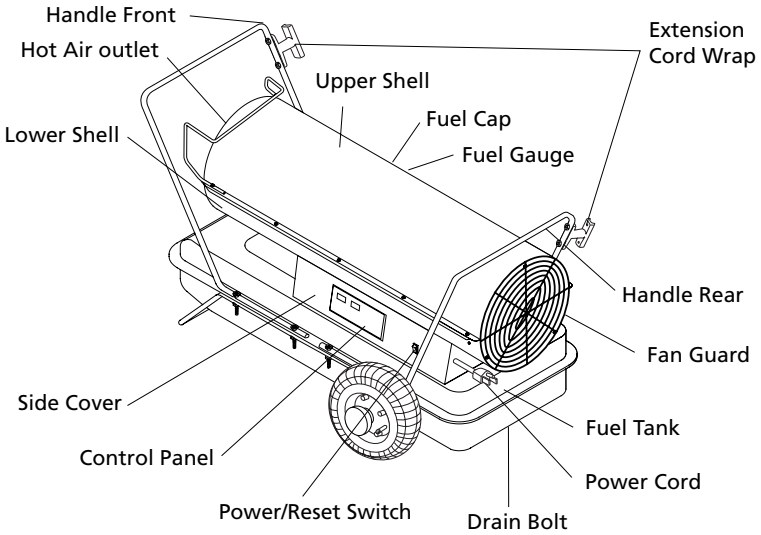

Figure 3 – Model 3VE53B Features

General Safety Information (Continued)

⚠WARNING ***Never leave the heater unattended while burning!***

⚠ DANGER ***Improper use of this heater can result in serious injury or death from burns, fire, explosion, electrical shock, and/or carbon monoxide poisoning.***

For optimal performance of this heater, it is strongly suggested that 1-K kerosene be used. 1-K kerosene has been refined to virtually eliminate contaminants, such as sulfur, which can cause a rotten egg odor during the operation of the heater.

However, #1 or #2 fuel oil (diesel fuel) may also be used if 1-K kerosene is not available. Be advised that these fuels do not burn as clean as 1-K kerosene, and care should be taken to provide more fresh air ventilation to accommodate any added contaminants that may be added to the heated space. Use of #1 or #2 fuel oil may result in more periodic maintenance.

⚠WARNING ***Risk of Indoor Air Pollution!***

- Use this heater only in well ventilated areas! Provide at least a three square foot (2,800 sq cm) opening of outside air for every 100,000 BTU/hr of heater rating.
- People with breathing problems should consult a physician before using the heater.

Model 3VE53B

General Safety Information (Continued)

- Carbon Monoxide Poisoning: Early signs of carbon monoxide poisoning resemble flu-like symptoms such as headaches, dizziness, and/or nausea. If you have these symptoms, your heater may not be working properly.
- Get fresh air at once! Have the heater serviced. Some people are more affected by carbon monoxide than others. These include pregnant women, those with heart or lung problems, anemia, or those under the influence of alcohol, or at high altitudes.
- Never use this heater in living or sleeping areas.

⚠ WARNING ***Risk of Burns/Fire/ Explosion!***

- NEVER use fuels such as gasoline, benzene, paint thinners, or other oil compounds in this heater (RISK OF FIRE OR EXPLOSION).
- NEVER use this heater where flammable vapors may be present.
- NEVER refill the heater's fuel tank while heater is operating or still hot. This heater is EXTREMELY HOT while in operation.
- Keep all combustible materials away from this heater.

Minimum Clearances

Outlet	**8 feet (250 cm)**
Sides, Top and Rear	**4 feet (125 cm)**

- NEVER block air inlet (rear) or air outlet (front) of heater.
- NEVER use duct work in front or at rear of heater.
- NEVER move or handle heater while still hot.
- NEVER transport heater with fuel in its tank.
  When used with optional thermostat or if equipped with a thermostat, the heater may start at any time.
- ALWAYS locate heater on a stable and level surface.
- ALWAYS keep children and animals away from heater.
- Use 1-K kerosene in this heater. #1 fuel oil is a suitable substitute.
- Bulk fuel storage should be a minimum of 25 ft. from heaters, torches, portable generators, or other sources of ignition. All fuel storage should be in accordance with federal, state, or local authorities having jurisdiction.

⚠ WARNING ***Risk of Electric Shock!***

- Use only the electrical power (voltage and frequency) specified on the model plate of the heater. Use only a three-prong, grounded outlet and extension cord.
- ALWAYS install the heater so that it is not directly exposed to water spray, rain, dripping water, or wind.
- ALWAYS unplug the heater when not in use.

CALIFORNIA RESIDENTS:

This heater produces carbon monoxide, which is listed by the State of California as a reproductive toxin under Proposition 65.

MASSACHUSETTS RESIDENTS:

Massachusetts state law prohibits the use of this heater in any building which is used in whole or in part for human habitation. Use of this heating device in Massachusetts requires local fire dept. permit (M.E.L.C. 148, Section 10A).

CANADIAN RESIDENTS:

Use of this heater shall be in accordance with authorities having jurisdiction and CSA Standard B139.

NEW YORK CITY RESIDENTS:

For use only at construction sites in accordance with applicable NYC codes. Contact Dayton customer service for NYCFD certificate of approval numbers.

Dayton® Portable Oil-Fired Heater

Assembly

Model	3VE53B
Wheel Support Frame	Yes
Wheels	Yes
Cap-wheel	Yes
Front-Handle	Yes
Rear-Handle	Yes
Axle	Yes
Screws and Nuts	Yes
Cotter Pin and Washer	Yes

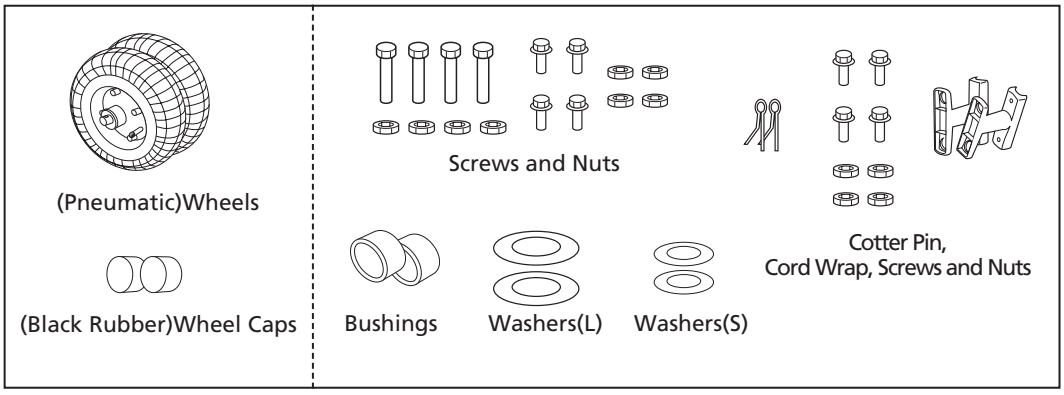

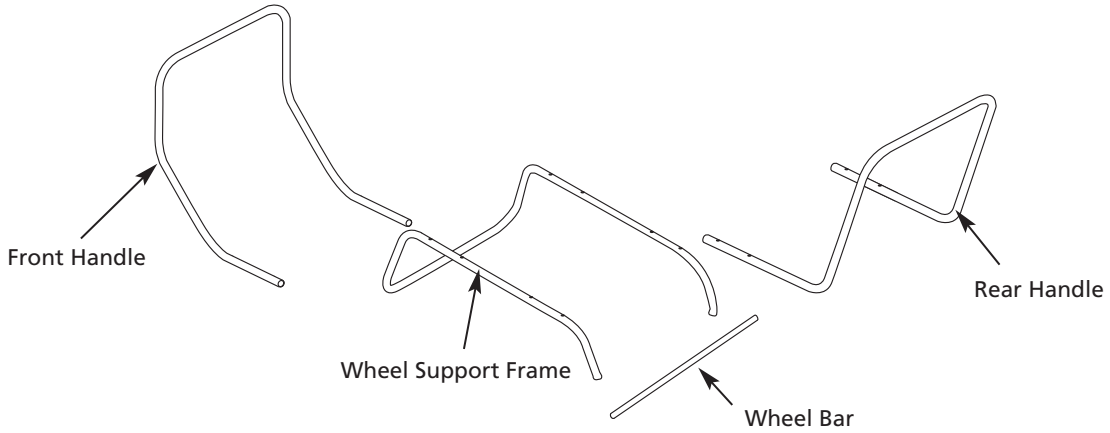

Figure 4 – Component Identification

Model 3VE53B

Assembly

TOOLS REQUIRED

- MEDIUM PHILLIPS SCREWDRIVER.
- OPEN OR ADJUSTABLE WRENCH, USE US(INCH) SCREWS NUTS.
- LONG NOSE PLIERS.

ASSEMBLING WHEEL, HANDLE

1. Slide axle through wheel support frame. Install wheel bushing, flat washers (S) and wheel on axle.

NOTE : When installing wheels, wheel tube valve of wheels outward wheel support frame (figure 5).

2. Place flat washers (L) and cotter pins on axle ends and bend cotter pins with long nose pliers to secure.
3. Place wheel cap on flat washers (L).
4. Place heater on wheel support frame. Make sure air inlet end (rear) of heater is over wheels. Align the holes on fuel tank flange. Insert screws through handles (front and rear), fuel tank flange, and wheel support frame as shown in Figure 5 and attach nut finger tight after each screw is inserted.
5. After all screws are inserted, tighten nuts firmly.
6. Place safety guard on upper shell. Tighten safety guard with two screws as figure 5.

⚠CAUTION ***Do not operate heater without support frame fully assembled to tank.***

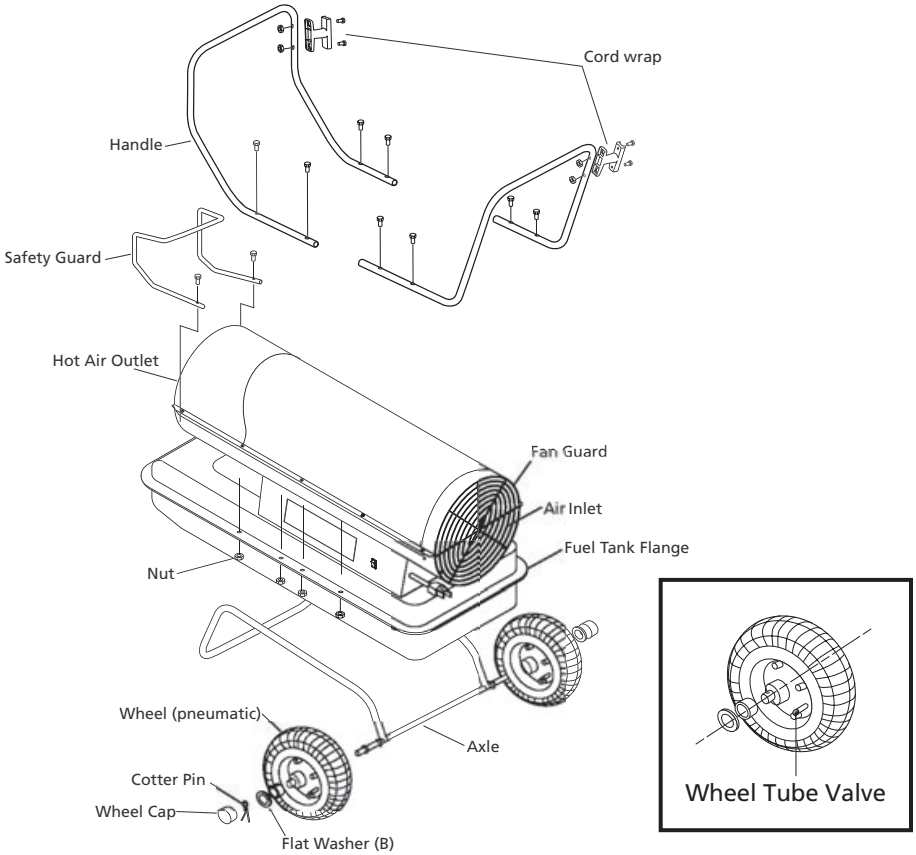

Figure 5 – 3VE53B Assembly

Operation

KEROSENE (1-K)

For optimal performance of this heater, it is strongly suggested that 1-K kerosene be used. 1-K kerosene has been refined to virtually eliminate contaminants, such as sulfur, which can cause a rotten egg odor during the operation of the heater. However, #1 or #2 fuel oil (diesel fuel) may also be used if 1-K kerosene is not available. Be advised that these fuels do not burn as clean as 1-K kerosene, and care should be taken to provide more fresh air ventilation to accommodate any added contaminants that may be added to the heated space.

NOTE: Kerosene should only be stored in a blue container that is clearly marked “kerosene”. Never store kerosene in a red container. Red is associated with gasoline.

- NEVER store kerosene in the living space. Kerosene should be stored in a well ventilated area outside the living area.
- NEVER use fuel such as gasoline, benzene, alcohol, white gas, camp stove fuel, paint thinners, or other oil compounds in this heater (THESE ARE VOLATILE FUELS THAT CAN CAUSE A FIRE OR EXPLOSION).
- NEVER store kerosene in direct sunlight or near a source of heat.
- NEVER use kerosene that has been stored from one season to the next. Kerosene deteriorates over time. OLD KEROSENE WILL NOT BURN PROPERLY IN THIS HEATER.

Dayton® Portable Oil-Fired Heater

Operation (Continued)

- Use 1-K kerosene in this heater. #1 fuel is a suitable substitute.

OVERVIEW OF HEATER DESIGN

Fuel System: This heater is equipped with an electric magnet pump that forces fuel through the fuel line connected to the fuel intake, and then through a nozzle in the burner head. This fuel is then sprayed into the combustion chamber in a fine mist.

Sure Fire Ignition: The electronic ignitor sends voltage to a specially designed spark plug. The spark plug ignites the fuel and air mixture described above.

The Air System: The heavy duty motor turns a fan that forces air into and around the combustion chamber. Here, the air is heated and then forced out the front of the heater.

THE SAFETY SYSTEM

Temperature Limit Control: This heater is equipped with a Temperature Limit Control designed to turn the heater off should the internal temperature rise to an unsafe level. If this device activates and turns your heater off, it may require service.

Once the temperature falls below the reset temperature, you will be able to start your heater.

Electrical System Protection: This heater's electrical system is protected by a fuse that protects it and other electrical components from damage. Fuse is located inside of an in-line "FUSE BARREL". If your heater fails to operate, check this fuse first and replace as needed(Two spare fuses are included with heater). Refer to Specification chart on page 1.

Flame-Out Sensor: Utilizes a photocell to monitor the flame in burn chamber during normal operation. It will cause the heater to shut off should the burner flame extinguish.

FUELING YOUR HEATER

Never fill the heater fuel tank in the living space: fill the tank outdoors.

Do not overfill your heater and be sure heater is level.

⚠ WARNING ***Never refill fuel tank when heater is operating or still hot.***

IMPORTANT: REGARDING FIRST IGNITION OF HEATER. The first time you light the heater, it should be done OUTDOORS. This allows the oils, etc., used in manufacturing heater to be burned off outside.

VENTILATION

⚠ CAUTION ***Risk of indoor air pollution. Use heater only in well ventilated areas.***

Provide a fresh air opening of at least three (3) square feet (2,800 sq. cm) for each 100,000 BTU/Hr. rating. Provide extra fresh air if more heaters are being used.

TO START HEATER

1. Fill fuel tank with kerosene or No. 1 fuel oil.
2. Attach fuel cap.
3. Plug power cord into three-prong, grounded extension cord. Extension cord must be at least six feet long.

Extension Cord Wire Size Requirements

- 6 to 100 feet long, use 14 AWG conductor.
- 101 to 200 feet long, use 12 AWG conductor.
- 201 to 300 feet long, use 10 AWG conductor.
- 301 to 400 feet long, use 8 AWG conductor.
- 401 to 500 feet long, use 6 AWG conductor.

4. Flip the power switch to "ON". Then press the "OPERATION BUTTON". The power indicator lamp and room temperature display will light and the heater will start. Push the up and down arrow keys on the control panel to adjust the thermostat setting.

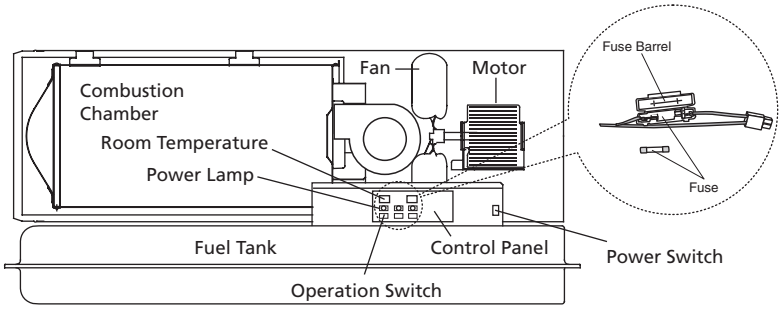

Figure 6 – Overview of Heater Design

MODEL	Internal Shut-Off Temp. +/-10 Degrees	Reset Temp. +/-10 Degrees
3VE53B	140°F/60°C	130°F/54°C

Model 3VE53B

Operation (Continued)

If heater does not start, the thermostat setting may be too low. Push "TEMP CONTROL UP ARROW" to higher setting to start heater. If heater still does not start, turn power switch to "OFF" and then to "ON" position (See Figure 7). If heater still does not start, see Troubleshooting Chart on page 15.

NOTE: The major electrical components of this heater are protected by a circuit breaker (fuse) mounted to the power switch. If your heater fails to start, check this first and replace as necessary. You should also check your power source to insure that proper voltage and frequency are being supplied to the heater.

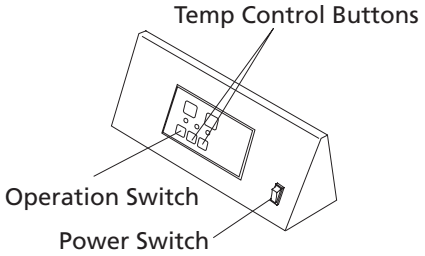

Figure 7. Control Panel

TO STOP HEATER

⚠ CAUTION ***Never unplug heater while heater is running.***

Heater must go through cooling cycle. The cooling cycle cools the combustion chamber. Damage to heater can occur if combustion chamber is not cooled. Do not restart heater until cooling cycle is complete.

1. Push "TEMP CONTROL DOWN ARROW" to lowest temperature setting. This will cause heater flame to go out. The motor will continue to run during the cooling cycle. This allows the fan to cool the combustion chamber. When the cooling cycle (approx.2.5 minute) is finished, the motor will stop. Do not turn switch to "OFF" or unplug heater until cooling cycle is finished.
2. Push power switch to "OFF" and unplug power cord.
3. To temporarily stop heater, set thermostat at a temperature lower than air around heater. Heater will cycle back on if air temperature around heater matches thermostat setting.

TO RESTART HEATER

⚠ CAUTION ***Do not restart heater until cooling cycle is finished.***

The cooling cycle cools the combustion chamber.

1. Wait until cooling cycle is finished after stopping heater.
2. Repeat steps under TO START HEATER.

ELECTRICAL OUTLET

⚠ WARNING **Shock Hazard!**

- Never plug in an appliance with more than a 5amp rating into this outlet.
- Always keep outlet covered when not in use.
- 250V 5amp max (non fused).

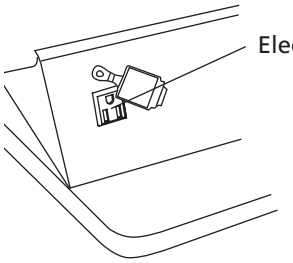

Figure 8 – Electrical outlet

LONG-TERM STORAGE OF YOUR HEATER

FUEL TANK DRAIN

1. Remove drain bolt from rear bottom-front side of fuel tank by unscrewing drain bolt from drain. See Figure 9.

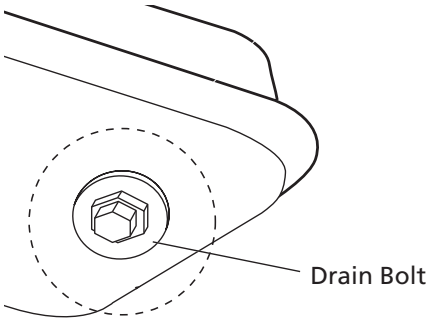

(Bottom-Front of Fuel Tank)

Figure 9 – Drain Bolt Removal

2. Using a small amount of kerosene, swirl and rinse the inside of the tank. NEVER MIX WATER WITH KEROSENE, as it will cause rust inside the tank. Pour the kerosene out, making sure that you remove it all.

IMPORTANT: Do not store kerosene over summer for use during next heating season. Using old fuel may damage heater.

Dayton® Portable Oil-Fired Heater

Operation (Continued)

3. Reinstall drain bolt as follows.

- Insert bolt's seal head fully into drain hole so that flange is flush to tank's bottom. See Figure 10.
- Insert seal cap fully into head hole so that cap flange is flush to head flange. See Figure 10.

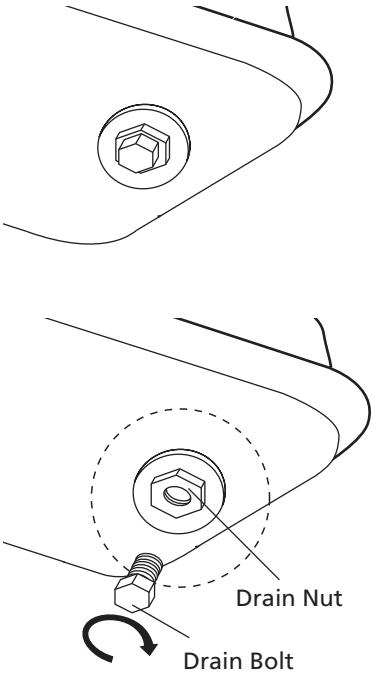

Figure 10 – Drain Bolt Reinstall

IMPORTANT: Reinstall bolt fully into hole in tank; otherwise it will not seal completely.

- Make sure storage place is free of dust and corrosive fumes.
- Store the heater in the original box with the original packing material and keep USER'S MANUAL with heater.

Maintenance

⚠WARNING ***Never service heater while it is plugged in or while hot!***

USE ORIGINAL EQUIPMENT REPLACEMENT PARTS. Use of third-party or other alternate components will void warranty and may cause unsafe operating conditions.

FUEL TANK

Flush every 200 hours of operation or as needed (See Storage, page 7).

FAN BLADES

CLEAN EVERY SEASON OR AS NEEDED

- Remove upper shell (See Air Intake Filter).
- Use Allen wrench to loosen set screw which holds fan blade to motor shaft.
- Slip fan blade off motor shaft.
- Clean fan blade using soft cloth moistened with kerosene or solvent.
- Dry fan blade thoroughly.
- Reinstall fan blade to motor shaft.
- Place fan blade hub flush with end of motor shaft.
- Place set screw on flat of shaft.
- Tighten screw firmly (40-50 inch-pounds/4.5-5.6 N-m). Reinstall upper shell.

NOZZLE

Remove dirt in nozzle as needed (See figure 12)

- Remove upper shell.
- Remove fuel line B from burner assembly by using wrench.
- Remove burner head from burner assembly.
- Remove lead wire from spark plug.
- Remove spark plug from burner head.
- Carefully remove nozzle from burner head using socket wrench.
- Blow compressed air through face of nozzle. (This will remove any dirt).
- Inspect nozzle for damage. If damaged or clogged, replace nozzle.
- Make sure plug is in place on burner head.
- Reinstall nozzle into burned head and tighten firmly (175~200 inch-pounds).
- Reinstall spark plug in burner head.
- Attach burner head to combustion chamber.
- Attach spark plug wire to spark plug.
- Attach fuel line to burner head tighten firmly.
- Replace upper shell.

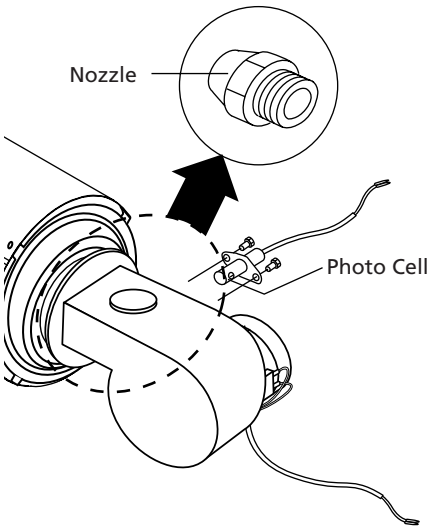

Figure 11 – Nozzle Replacement

Model 3VE53B

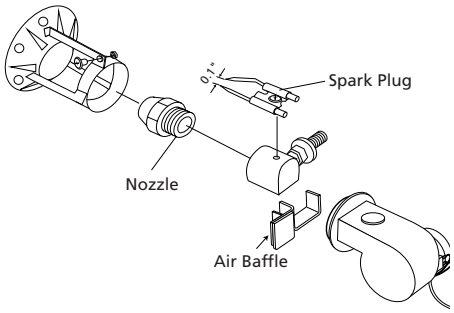

Figure 12 – Nozzle

- Attach ignitor wire to spark plug. Attach fuel and air line hoses to burner head.
- Reinstall fan blade and upper shell.

SPARK PLUG

CLEAN AND REGAP EVERY 600 HOURS OF OPERATION OR REPLACE AS NEEDED.

- Remove upper shell.
- Remove spark plug wire from spark plug (See Figure 13).
- Remove spark plug from burner head using medium phillips screw driver.
- Clean and regap spark plug electrodes to 0.1" (2.5mm) gap.
- Reinstall spark plug in burner head.
- Attach spark plug wire to spark plug.
- Reinstall upper shell.

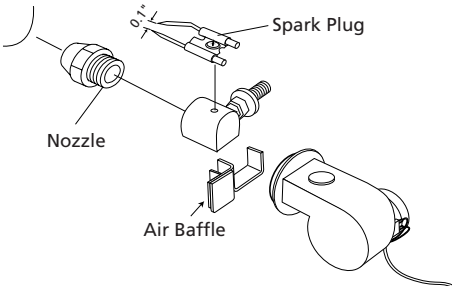

Figure 13 – Spark Plug Replacement

- Remove upper shell.
- Remove fan (See Fan Blades).
- Remove photocell from its mounting bracket.
- Clean photocell lens with cotton swab. TO REPLACE: Remove side cover near power switch.
- Disconnect wires from power switch and remove side cover.
- Disconnect wires from circuit board and remove photocell.
- Install new photocell and attach wires to circuit board.
- Replace switch wires to power switch and side cover.
- Replace fan and upper shell.

PHOTOCELL

CLEAN PHOTOCELL ANNUALLY OR AS NEEDED.

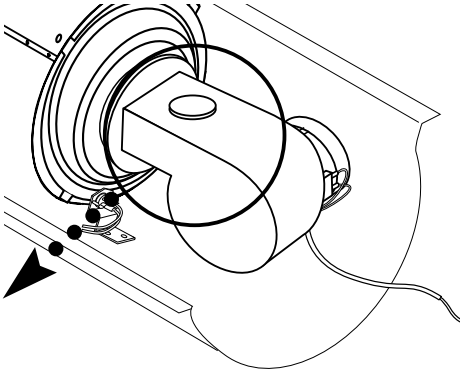

Figure 14 – Photocell Lead Wire

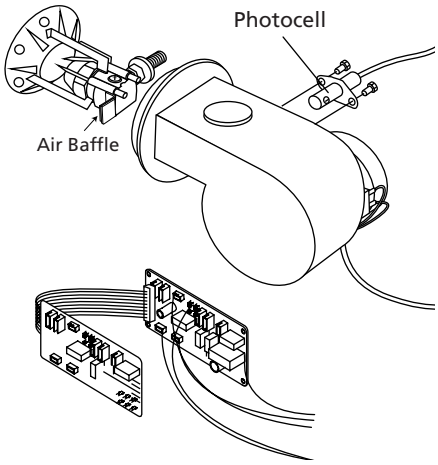

Figure 15 – Photocell Replacement

Dayton® Portable Oil-Fired Heater

FUEL FILTER (See Figure 16)

CLEAN TWICE PER HEATING SEASON OR AS NEEDED.

Fuel filter A on Fuel cap

- Remove fuel cap.
- Take out fuel filter with clean kerosene.
- Wash fuel filter with clean kerosene.
- Replace fuel filter on fuel tank.
- Replace fuel cap on fuel tank.

Fuel filter B on fuel line (See Figure 16)

- Remove fuel line A from fuel pump by using wrench.
- Take out fuel line from Fuel tank by pull out fuel filter gasket.
- Remove fuel filter assembly from fuel line.
- Wash fuel filter in clean kerosene .
- Reassamble fuel filter in reverse order.

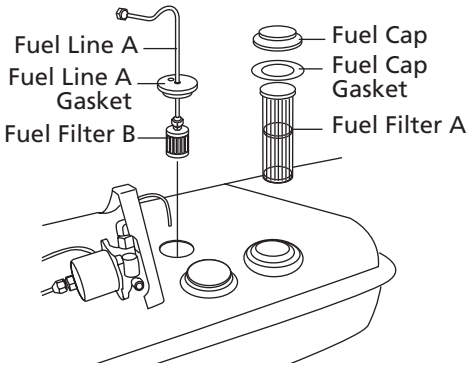

Figure 16 – Remove Tank Fuel Filter

PUMP PRESSURE ADJUSTMENT

- Remove right side panel with screw driver.
- Remove fuel line A from fuel pump by using wrench.

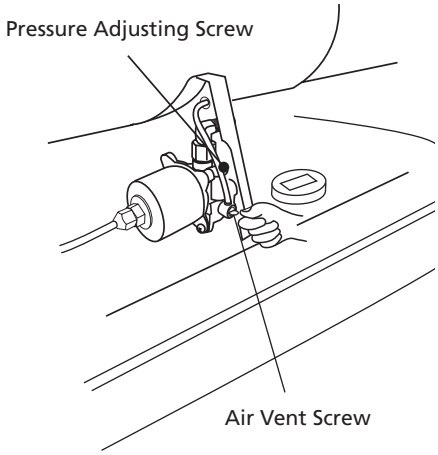

Figure 17-Pump Pressure Adjustment

- Replace pressure gauge at outlet of fuel pump.
- Adjust pump pressure by turning pressure adjusting screw.
- Turn relief valve clockwise to increase pressure.
- Turn relief valve counterclockwise to decrease pressure.
- Set pump pressure to correct pressure.

Model	Pump Pressure
3VE53B	130PSI

We recommend pump pressure adjusting is not needed if red marking on pump body and adjusting screw is fit each other.

NOTE: Use only original equipment replacement parts. Use of alternate or third party components will void any warranty and may cause unsafe operating conditions.

- Stop heater (See OPERATION, page 7). If accessory pressure gauge is being used, remove pressure gauge.
- Replace pressure gauge, and plug in end of filter cover.

NOTE: USE ONLY ORIGINAL EQUIPMENT REPLACEMENT PARTS. Use of alternate or third party components will void warranty and may cause an unsafe operating condition.

NOTE: If heater does not ignite when START SWITCH IS SWITCHED, please turn AIR VENT SCREW to counter clockwise to release air, then flip POWER SWITCH back on.

Model 3VE53B

Wiring Diagrams

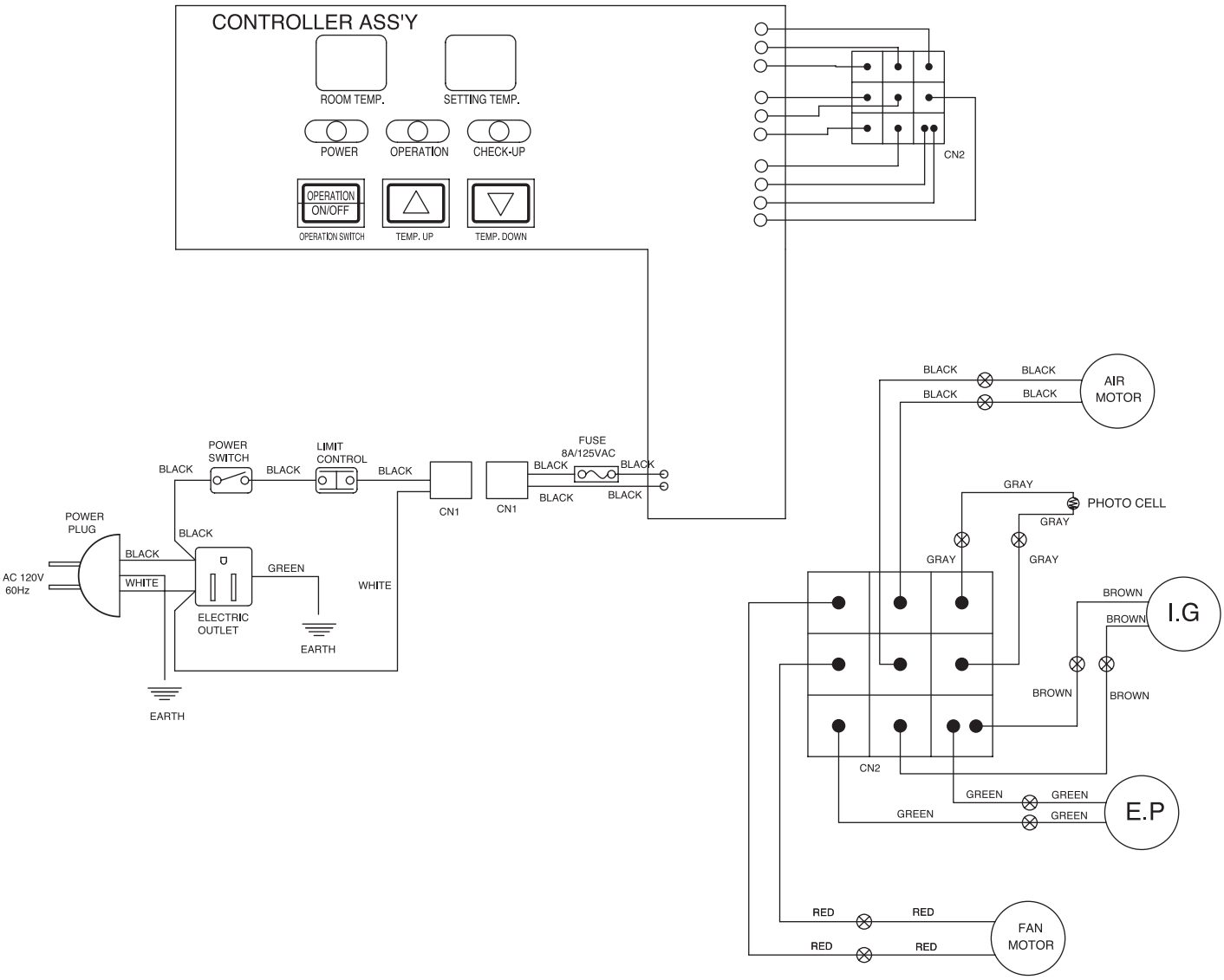

For Repair Parts, call 1-800-323-0620

24 hours a day – 365 days a year

Please provide following information:
-Model number
-Serial number (if any)
-Part description and number as shown in parts list

Address parts correspondence to:
Grainger Parts
P.O. Box 3074
1657 Shermer Road
Northbrook, IL 60065-3074 U.S.A.

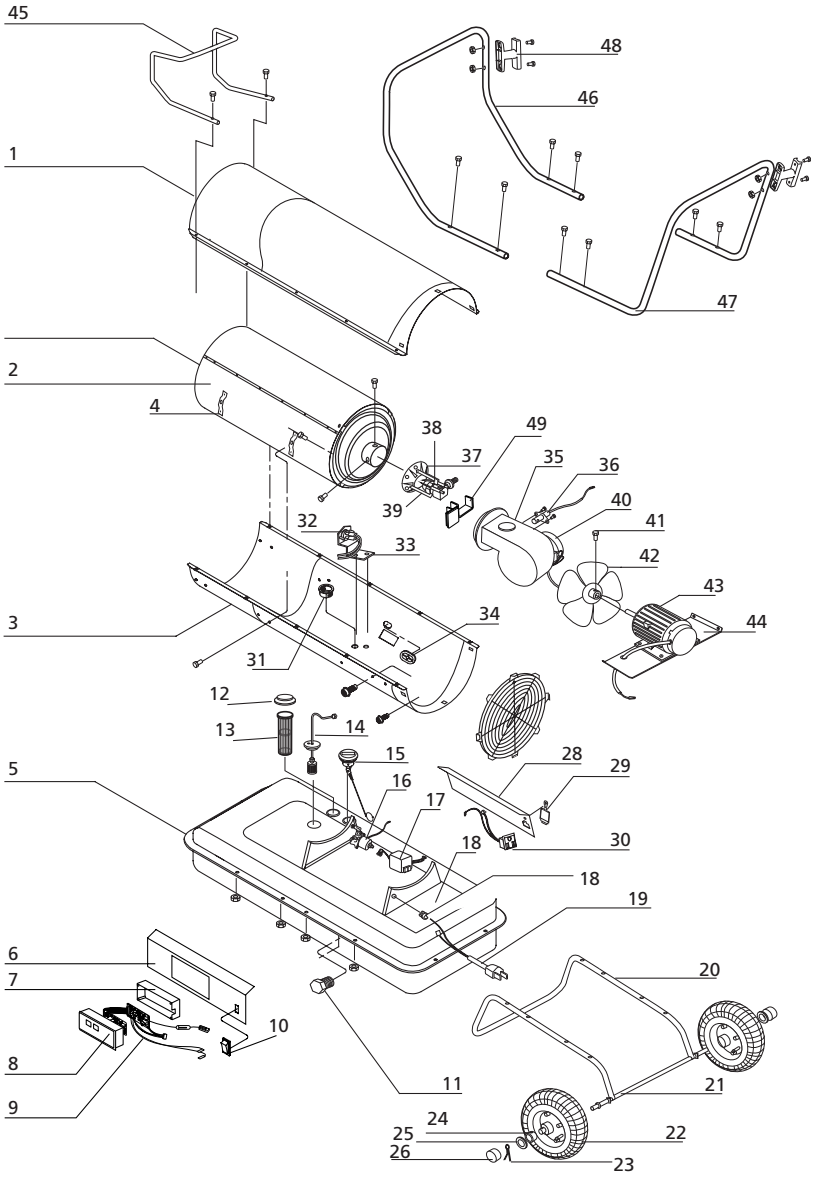

Figure 19 – Repair Parts Illustration for Model 3VE53B

Repair Parts List for Portable Oil-Fired Heater

Ref. No.	Description	PART No.	QTY	Ref. No.	Description	PART No.	QTY
1	Upper Shell	70-001-1401	1	6	Right Side Cover	70-008-0500	1
2	Chamber Ass'y	70-011-0600	1	7	PCB Case Lower	70-027-0702	1
3	Lower Shell	70-001-1402	1	8	PCB Case Upper	70-027-0703	1
4	Baffle Bracket Rear	70-001-0608	4	9	Main PCB Ass'y	70-027-0700	1
5	Fuel Tank Ass'y	70-002-0400	1	10	Power Switch	70-038-0100	1

Model 3VE53B

Repair Parts List for Portable Oil-Fired Heater

Ref. No.	Description	PART No.	QTY
11	Drain Bolt	70-036-0802	1
12	Fuel Cap Ass'y	70-006-0200	1
13	Fuel Filling Filter	70-006-0300	1
14	Fuel Line Ass'y(A)	70-036-0700	1
15	Fuel Gauge Ass'y	70-007-0300	1
16	Magnet Pump Ass'y	70-020-0700	1
17	Ignitor	70-037-0700	1
18	Cord Bushing	70-033-0200	1
19	Power Cord Ass'y	70-034-0300	1
20	Wheel Support Frame	70-064-0100	1
21	Wheel Axle	70-041-0303	1
22	Pneumatic Wheel	70-041-0110	2
23	Split Pin	70-041-0107	2
24	Wheel Bushing	70-041-0109	2
25	Flat Washer(A)	70-041-0105	2
26	Wheel Cap	70-041-0104	2
27	Fan Guard	70-016-0300	1
28	Left Side Cover	70-009-0500	1
29	Socket Cover	70-030-0100	1
30	Electric Outlet Ass'y	70-029-0100	1

Ref. No.	Description	PART No.	QTY
31	Bushing Grommet(L)	70-018-0200	1
32	Thermostat	70-019-0500	1
33	Thermostat Bracket	70-019-0501	1
34	Rubber Bushing	70-018-0300	1
35	Burner Blower Fan Ass'y	70-063-0300	1
36	Photocell Ass'y	70-016-0150	1
37	Air Control Head Ass'y	70-014-0701	1
38	Spark Plug	70-052-0400	1
39	Nozzle	70-015-0700	1
40	Burner Motor Ass’y	70-063-0200	1
41	Fan Fixing Screw M8x8	-	1
42	Fan Ass'y	70-024-0700	1
43	Air Motor Ass'y	70-021-0700	1
44	Motor Supporter	70-020-0407	1
45	Safety Guard	70-065-0100	1
46	Front Handle	70-042-0300	1
47	Rear Handle	70-043-0300	1
48	Cord Wrap	70-032-0200	2
49	Air Baffle	–	1

Dayton® Portable Oil-Fired Heater

Troubleshooting Chart

Symptom	Possible Cause(s)	Corrective Action
Heater ignites but Main PCB Assembly shuts heater off after a short period of time (Lamp is flickering) E1	1. Wrong pump pressure 2. Dirty Fuel Filter 3. Dirt in Nozzle 4. Dirty Photocell Lens 5. Photocell Assembly not properly installed (not seeing flame) 6. Bad electrical connection between photocell and Main PCB Assembly 7. Bad Photocell	1. See Pump Pressure Adjustment, Page 10 2. See Fuel Filter, Pages 10 3. See Nozzle, Page 8 4. Clean Photocell Lens, Page 9 5. Make sure Photocell Boot is properly seated in bracket, Page 9 6. Check electrical components (See wiring diagrams, Page 11) 7. Replace Photocell, Page 9
Heater will not ignite, but motor runs for a short period of time (Lamp is flickering) E1	1. No fuel in tank 2. Wrong pump pressure 3. Carbon deposits on Spark Plug and/or improper gap 4. Dirty Fuel Filter 5. Dirt in Nozzle 6. Water in Fuel Tank 7. Poor electrical connection between ignitor and Main PCB Assembly 8. Ignitor Wire not attached to Spark Plug 9. Defective Ignitor	1. Fill tank with kerosene 2. See Pump Pressure Adjustment, Page 10 3. See Spark Plug, Pages 9 4. See Fuel Filter, Pages 10 and 10 5. See Nozzle, Page 8 6. Flush Fuel Tank with clean kerosene 7. Check electrical connections (See wiring diagrams, Page 11) 8. Attach Ignitor Wire to Spark Plug. See Spark Plug, Pages 9 9. Replace Ignitor
Fan does not turn when heater is plugged in and Power Switch is in the ON position (Lamp is on or flickering) E1 or E2	1. Thermostat setting too low 2. Poor electrical connection between Motor and Main PCB Assembly	1. Adjust Thermostat to a higher setting. 2. Check electrical connections (See wiring diagrams, Page 11)
E3	1. Switch Failure 2. Short circuit	1. Replace Switch 2. Check wiring and connection

Model 3VE53B

Troubleshooting Chart

Symptom	Possible Cause(s)	Corrective Action
E4	Sensor disconnected	1. Check limit control thermostat 2. Check sensor connection
E5	Overheating	1. Wait until unit cool down
Other Problems	1. Poor Combustion - Flames extending beyond heater - Low heat out 2. Power failure - No power supply to heater	1. Poor Combustion - Align a red mark between the screw and pump body 2. Power failure - Check / Replace fuse

Dayton® Portable Oil-Fired Heater

LIMITED WARRANTY

DAYTON ONE-YEAR LIMITED WARRANTY. Dayton® Portable Oil-Fired Heaters, Models covered in this manual, are warranted by Dayton Electric Mfg. Co. (Dayton) to the original user against defects in workmanship or materials under normal use for one year after date of purchase. Any part which is determined to be defective in material or workmanship and returned to an authorized service location, as Dayton designates, shipping costs prepaid, will be, as the exclusive remedy, repaired or replaced at Dayton's option. For limited warranty claim procedures, see PROMPT DISPOSITION below. This limited warranty gives purchasers specific legal rights which vary from jurisdiction to jurisdiction.

LIMITATION OF LIABILITY. To the extent allowable under applicable law, Dayton's liability for consequential and incidental damages is expressly disclaimed. Dayton's liability in all events is limited to and shall not exceed the purchase price paid.

WARRANTY DISCLAIMER. Dayton has made a diligent effort to provide product information and illustrate the products in this literature accurately; however, such information and illustrations are for the sole purpose of identification, and do not express or imply a warranty that the products are MERCHANTABLE, or FIT FOR A PARTICULAR PURPOSE, or that the products will necessarily conform to the illustrations or descriptions. Except as provided below, no warranty or affirmation of fact, expressed or implied, other than as stated in the "LIMITED WARRANTY" above is made or authorized by Dayton.

PRODUCT SUITABILITY. Many jurisdictions have codes and regulations governing sales, construction, installation, and/or use of products for certain purposes, which may vary from those in neighboring areas. While Dayton attempts to assure that its products comply with such codes, it cannot guarantee compliance, and cannot be responsible for how the product is installed or used. Before purchase and use of a product, review the product applications, and all applicable national and local codes and regulations, and be sure that the product, installation, and use will comply with them.

Certain aspects of disclaimers are not applicable to consumer products; e.g., (a) some jurisdictions do not allow the exclusion or limitation of incidental or consequential damages, so the above limitation or exclusion may not apply to you; (b) also, some jurisdictions do not allow a limitation on how long an implied warranty lasts, consequentially the above limitation may not apply to you; and (c) by law, during the period of this Limited Warranty, any implied warranties of implied merchantability or fitness for a particular purpose applicable to consumer products purchased by consumers, may not be excluded or otherwise disclaimed.

PROMPT DISPOSITION. Dayton will make a good faith effort for prompt correction or other adjustment with respect to any product which proves to be defective within limited warranty. For any product believed to be defective within limited warranty, first write or call dealer from whom the product was purchased. Dealer will give additional directions. If unable to resolve satisfactorily, write to Dayton at address below, giving dealer's name, address, date, and number of dealer's invoice, and describing the nature of the defect. Title and risk of loss pass to buyer on delivery to common carrier. If product was damaged in transit to you, file claim with carrier.

Manufactured for Dayton Electric Mfg. Co., 5959 W. Howard St., Niles, Illinois 60714 U.S.A.