BALMUDA

Control Code

BALMUDA The Teppanyaki

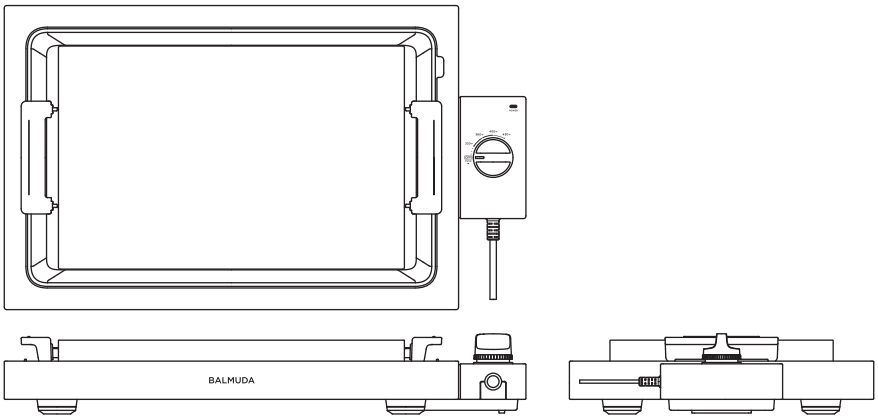

Electric Grill (Household Use Only)

K10H Series

Instruction Manual Limited Warranty

Thank you for purchasing BALMUDA The Teppanyaki. Before using the appliance, be sure to read this manual thoroughly, particularly its “Safety Precautions” (p.2 to 8) section. In addition, pay special attention to the contents marked with ⚠. Carefully store the manual after reading it together with your proof of purchase, which shows the date of purchase and dealer’s name.

FOR USE IN U.S. ONLY
WARRANTY VOID IF USED OUTSIDE U.S.

Important	Be sure to read this manual before use. Keep it in a safe place for future reference. For information on our warranty policy, please refer to the BALMUDA website (https://us.balmuda.com).

Contents

IMPORTANT SAFEGUARDS..... 1
Safety Precautions..... 2
Contents of the Package 9
Names of Parts..... 9
Using the Appliance for the First Time.....10
How to Use 13
Cleaning 17
Troubleshooting 20
Error Indications 22
Accessory Set for BALMUDA The Teppanyaki (Sold Separately) 24
Product Registration 25
Warranty Policy and Privacy Policy 25
Disposal 25
Product Specifications.....25
Customer support 26

IMPORTANT SAFEGUARDS

When using electrical appliances, basic safety precautions should always be followed, including the following:

1. Read all instructions.
2. Do not touch hot surfaces. Use handles or dials.
3. To protect against fire, electric shock, and injury to persons, do not immerse the cord, plugs, or main body in water or other liquid.
4. Close supervision is necessary when any appliance is used by or near children.
5. Unplug the power cord from the outlet when the appliance is not in use and before cleaning it. Allow the appliance to cool before putting on or taking off the parts, and before cleaning the appliance.
6. Do not operate the appliance with a damaged cord or plug, or after the appliance malfunctions, or has been damaged in any manner. Return the appliance to the nearest authorized service facility for examination, repair or adjustment.
7. The use of any accessory attachments not recommended by BALMUDA may result in fire, electric shock, or injury to persons.
8. Do not use the appliance outdoors.
9. Do not let the cord hang over the edge of a table or counter, or touch hot surfaces.
10. Do not place the appliance on or near a hot gas or electric burner, or in a heated oven.
11. Extreme caution must be used when moving the appliance if hot oil or other hot liquids remain inside.
12. Always attach plug to appliance first, then plug cord in the wall outlet. To disconnect, turn any control to “off,” then remove plug from wall outlet.
13. Do not use appliance for other than intended use.
14. The appliance is for household use only.

SAVE THESE INSTRUCTIONS

Safety Precautions

Read the Safety Precautions carefully before use to ensure correct operation. The precautions described in this manual must be followed to ensure safe use of this appliance and prevent hazards to you and other people, as well as damage to the appliance and your home or property. Once you finish reading this manual, store it carefully for future reference. Also please note that this appliance is intended for household and indoor use only. Do not use the appliance outdoors.

These symbols indicate the degree of harm or damage that may be caused by improper use.

⚠ **WARNING**	Indicates "**actions that could result in serious injury or death**".
⚠ **CAUTION**	Indicates "**actions that could result in minor injury or cause damage to a building or furniture**".

These symbols indicate requirements during use of this appliance.

Indicates **prohibited** actions that must not be performed.

Indicates **required** actions that must be performed.

Indicates **general precautions.**

⚠ WARNING

Installation

Do not place the power cord in between any spaces within the product and make sure the power cord does not come in contact with the bottom of the appliance. Do not insert your fingers, wires, or any kind of metallic or other foreign objects inside the appliance.

Doing so may cause burns and other injuries, electric shock, fire, or malfunction. If there is a foreign object inside the main unit,disconnect the power plug from the outlet and contact BALMUDA Support (p.26).

Do not use the appliance on a mat sensitive to heat.

Doing so may cause fire.

Do not place the appliance on a table made of resin or other materials sensitive to heat.

Doing so may cause an unpleasant odor.

Do not use the appliance on an object that could block the steam vent at the bottom of the main unit.

Doing so may cause fire.

Do not place the appliance where the power cord could be tripped over.

You may drop the appliance if you trip over the power cord, causing injuries, fire, or malfunction.

Do not use the appliance at an altitude of 6,500 feet or higher.

Doing so may cause electric shock, fire, or malfunction.

Power cord

Do not disconnect or insert the power plug with wet hands.

Doing so may cause electric shock.

Do not apply tension to the power cord while using the appliance.

Do not do any of the following, as this may cause the power cord to overheat and catch fire:

Scratch, modify, bend, pull, step on, or twist the cord or place it near heating devices.

Do not place heavy items on the cord, or use it while it is bundled.

Do not use a broken power plug.
Doing so may cause electric shock or cause fire due to heat.

Do not use a power strip to which many other devices are connected.
Doing so may cause sparks or fire.

If the power cord is damaged, the cord must be replaced by BALMUDA or our representative or equally qualified personnel.

Use a dedicated outlet with a rated current of 12 A or more at 120 V AC.
Using the appliance with an outlet or extension cord that does not meet the rating, or with an outlet or extension cord shared with other devices, may cause overheating, resulting in fire.

Insert the power plug fully into the outlet.
If the power plug is inserted incorrectly, it may cause electric shock or cause fire due to heat.

To unplug, pull on the power plug rather than the cord.
Failure to do so may cause electric shock or fire due to short circuit.

Unplug after cooking or when the appliance is not in use.
Failure to do so may cause fire or electric shock.

Usage

Never attempt to repair, disassemble, or modify the appliance yourself.
Doing so may cause accidents or injuries due to electric shock, fire, or abnormal operation.
Please contact BALMUDA Support (p.26) in case of malfunction.

This appliance is not intended for use by persons (including children) with reduced physical, sensory, or mental capabilities, or lack of experience and knowledge, unless they have been given supervision or instruction concerning use of the appliance by a person responsible for their safety. Children should be supervised to ensure that they do not play with the appliance (including the power cord).
Failure to do so may cause burns and other injuries, electric shock, fire, or malfunction.

Do not use the appliance (including the accessories) for purposes other than cooking.

Doing so may cause fire, smoke, burns, or malfunction.

Do not splash the appliance with water or any kind of liquid. Do not immerse the appliance in water or any kind of liquid.

Doing so may cause electric shock or malfunction. If the power cord, temperature setting dial, or heater tube is splashed with liquid, turn the power off, unplug the power cord, and wipe off the liquid. Please contact BALMUDA Support (p.26) if you find any abnormality during use after this.
Some parts can be cleaned with water. Refer to “Cleaning” (p.17) for details.

Do not touch the edge of the spatula included in this set.

Directly touching the edge of the spatula may cause injury during use or cleaning.

Do not leave the main unit unattended during cooking.

Doing so may result in fire. When you leave the appliance, be sure to turn the power off.

Do not use an open flame to cook food on the clad plate.

Do not flambé food (cover food with liquor and set it alight to evaporate the alcohol content quickly) or use a torch flame to sear food. Doing so may cause fire.

Never use charcoal with the appliance.

Doing so may cause malfunction.

Do not use the clad plate for purposes other than those described in this manual. Do not place the clad plate in an oven or on a stove, regardless of whether it is gas or electric.

Doing so may cause malfunction or deterioration of the clad plate.

Do not store the appliance above eye level. Do not store the appliance in a humid place.

The clad plate or other items may fall when taking the product out from a storage above eye level and cause injury. Storing the appliance in a humid place may result in malfunction.

Do not store the spatula included within reach of children.

The appliance is not designed to be operated with an external timer or separate remote control system.

Remove all packing materials.

Using the appliance with any packing material remaining may cause fire or malfunction.

⚠ CAUTION

Installation

Do not use the appliance near a wall or furniture.
Doing so may cause damage to the wall or furniture from steam or heat, resulting in discoloration or deformation.

Do not use the appliance outdoors.

Do not use the appliance where it is exposed to strong airflow.
If the appliance is directly exposed to airflow from a fan, air conditioner, or similar device, it may not reach the appropriate temperature (when the indicator changes to a solid color).

Place the main unit on a horizontal surface.
If the main unit and clad plate are tilted, food or seasoning on the clad plate may drop into the drip tray.

Be careful not to catch your fingers between the clad plate and the drip tray when placing the clad plate on the main unit.
When carrying the clad plate, hold the handles on both sides and keep the surface horizontal.

Place the clad plate horizontally on the main unit.
If the clad plate is not fitted correctly, it may drop onto the floor, causing injury or damage.
After setting the clad plate on the main unit, hold the handles with both your hands and move the plate back and forth and side to side to make sure it is fitted securely into the main unit. When carrying the clad plate, hold the handles on both sides and keep the surface horizontal.

Usage

Do not carry or remove the clad plate during heating, cooking or immediately after cooking. Do not touch the drip tray.
The clad plate used for the appliance retains a high degree of heat and takes longer to cool down. Make sure that the temperature has dropped sufficiently before carrying the plate.
Touching a hot part (clad plate, drip tray, heater tube, or heat shielding plate) may cause burns.
⚠ This mark indicates “CAUTION: Hot Surface.”

Do not touch the handles of the clad plate with your bare hands after heating for a long time.

The resin part may be very hot and cause burns.

Do not rapidly cool the clad plate immediately after cooking.

Doing so may cause burns, deformation, or malfunction due to steam.

Do not directly heat a can, bottle, or any kind of container with food in it.

Doing so may cause the container to burst, resulting in burns and other injuries.

Do not fill the drip tray with water.

Do not move the main unit during use. Do not put your hand under the main unit.

The steam vent is located at the bottom of the main unit. Touching the heat shielding plate through the steam vent may cause burns.

Do not use the appliance in combination with parts, accessories, etc. of other products.

Doing so may cause burns and other injuries, electric shock, fire, or malfunction.

Do not apply strong impact to the main unit.

Doing so may cause malfunction.

Firmly hold both sides of the main unit with both your hands and carry it horizontally.

Do not hold the main unit vertically. If you carry the main unit with one hand or tilt the unit while carrying it, you may drop it, causing injuries.

Always install the clad plate and the drip tray while using the appliance.

Using the appliance with the clad plate or the drip tray removed may cause an accident or fire.

Pay careful attention when handling a commercially available mini skillet, ramekin, or any kind of heat-resistant container so that it will not fall off the clad plate during heating.

Promptly remove oil and food remnants accumulated in the drip tray.

If contents spill from the drip tray it may cause fire. Wait for the clad plate, drip tray and the food contents to cool down and then wipe off the tray with a paper towel or the like.

Tighten the screws in the back of the clad plate handle if it is loose.

If you use the appliance with a loose handle, it may come off, resulting in burns and other injuries.

Cleaning

Do not use the appliance unless the main the unit, temperature setting dial, heater tube and heat shielding plate are clean.

Using the appliance unclean may cause fire. Unplug the main unit and allow the clad plate, drip tray, heater tube, and heat shielding plate to cool down sufficiently before performing cleaning (p.17).

Unplug the main unit and allow the clad plate, drip tray, heater tube, and heat shielding plate to cool down sufficiently before performing cleaning.

Failure to do so may cause burns and other injuries, electric shock, or malfunction.

Dry the parts completely after cleaning with water and before usage.

Failure to do so may cause electric shock or malfunction.
Some parts can be cleaned with water. Refer to “Cleaning” (p.17) for details.

Firmly hold both sides of the drip tray and keep the tray horizontal when removing it.

If you carry the tray with one hand or tilt it, it may slip out of your hand due to oil residue, causing injuries.

Contents of the Package Note: One each

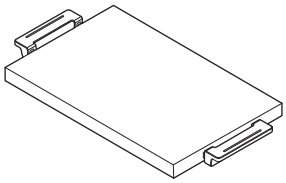

Clad plate[1]

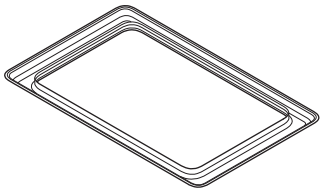

Drip tray

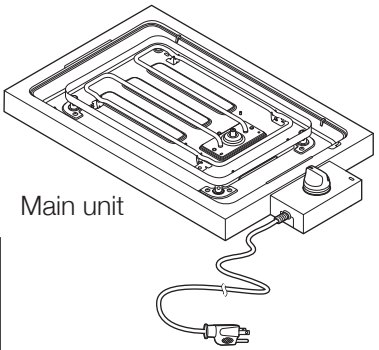

Main unit



Spatula[2]

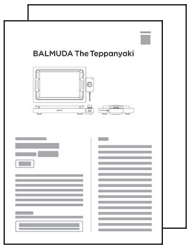

Attention note

Instruction manual
(this manual)

Notes:

1. Two plate types can be used with BALMUDA The Teppanyaki: the clad plate and the griddle. The griddle is sold separately. Refer to p.24 for details.
2. The spatula provided in this set is specifically for the clad plate of BALMUDA The Teppanyaki. Do not use the spatula together with the griddle.

Names of Parts

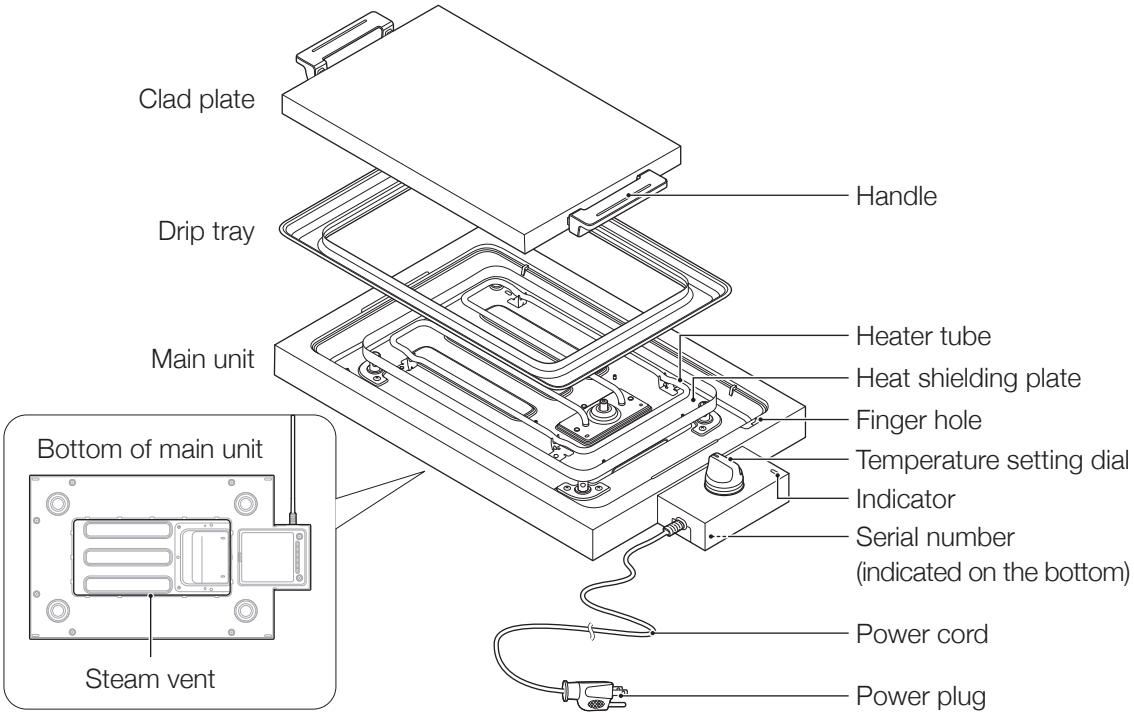

Using the Appliance for the First Time

1 Clean the parts that could come in contact with food.

Use a soft sponge or the like and neutral kitchen detergent to clean the clad plate, drip tray, and spatula before using the appliance for the first time or after long-term storage. Wipe off the water with a dry cloth and dry the parts thoroughly after cleaning them. Refer to p.17 for details of the cleaning procedure.

Parts that can be cleaned with water

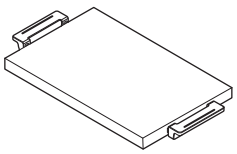

Clad plate

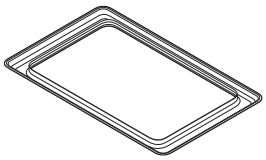

Drip tray



Spatula

⚠

Do not use the appliance on a mat sensitive to heat.
Do not use the appliance on an object that could block the steam vent at the bottom of the main unit.

Doing so may cause fire.

Do not place the appliance on a table made of resin or other materials sensitive to heat.

Doing so may cause an unpleasant odor.

Do not place the appliance where the power cord could be tripped over.

You may drop the appliance if you trip over the power cord, causing injuries, fire, or malfunction.

Place the main unit on a horizontal surface.

If the main unit and clad plate are tilted, food or seasoning on the clad plate may drop into the drip tray.

2 Set the drip tray in the main unit.

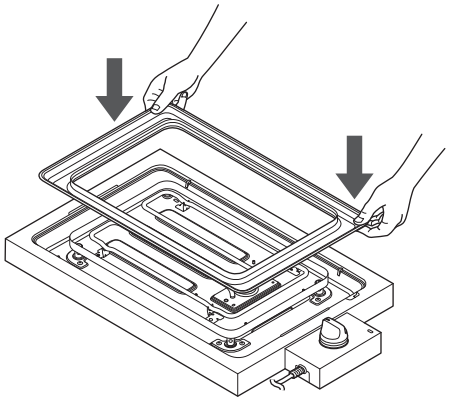

⚠ **Do not fill the drip tray with water.**

The drip tray is intended to collect remnants and oil from the clad plate. Do not fill the tray with water.

3 Set the clad plate in the main unit.

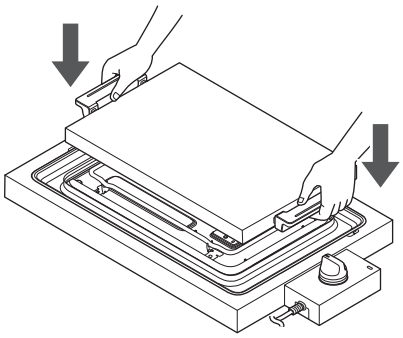

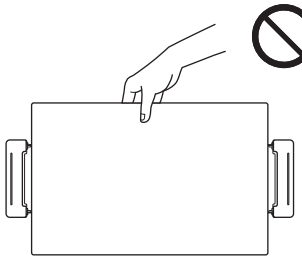

Do not hold any parts other than the handles.

Make sure that there is no foreign object or water between the clad plate and the main unit.
Hold the handles on both sides and keep the surface of the clad plate horizontal.
After setting the clad plate on the main unit, hold the handles with both your hands and move the plate back and forth and side to side to make sure it is fitted securely into the main unit.

⚠ **Be careful not to catch your fingers between the clad plate and the drip tray when placing the clad plate on the main unit.**

Hold the handles on both sides and keep the surface of the clad plate horizontal when carrying it.

Place the clad plate horizontally on the main unit.

If the clad plate is not fitted correctly, it may drop onto the floor, causing injury or damage.

4 Make sure that the temperature setting dial is set to the OFF position and insert the power plug into the outlet.

If the power plug is inserted while the temperature setting dial is set to a position other than OFF, the indicator will blink and the power will not be turned on (p.22).

⚠ **Be sure to season the clad plate before use in order to maintain the quality of the plate surface and ensure flavorsome cooking.**

Heat the clad plate to completely remove water. Moisten a paper towel or soft cloth with a tablespoon of vegetable oil. Apply the oil to the clad plate surface until an oil film is formed on the surface. This makes the plate less likely to burn food and the burnt-on food easier to remove.

How to Use

1 Set the cooking temperature.

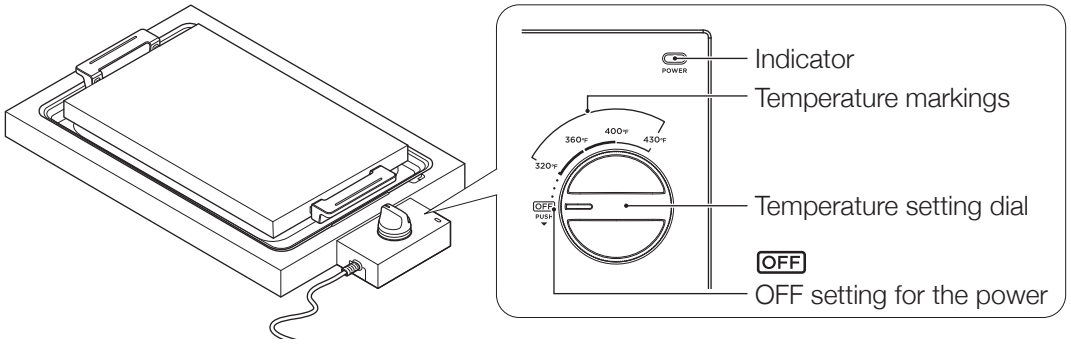

Hold, push down, and turn the temperature setting dial clockwise to a desired temperature. The indicator blinks slowly and repeatedly while the clad plate is being heated. When the set temperature is reached, the indicator will change to a solid color to inform you that the temperature is appropriate.

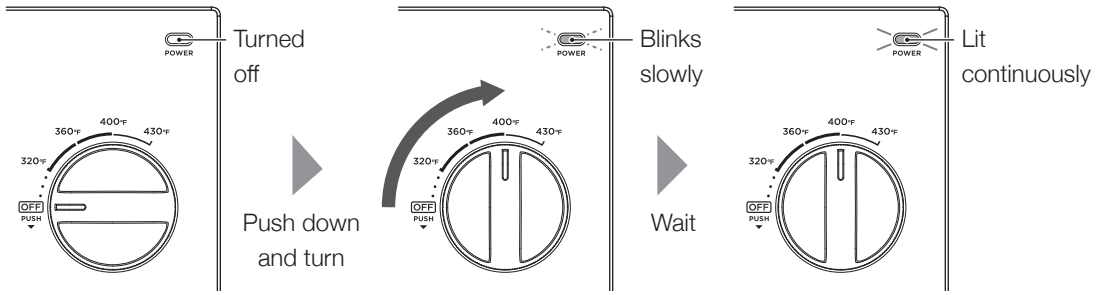

Temperatures cannot be set to other than the temperature markings (320°F, 360°F, 400°F, 430°F). If the temperature setting dial is left between two of the markings for some time, heating will be stopped for safety.

Standard time until the set temperature is reached: Approx. 13 minutes
The time it takes to reach the set temperature depends on the ambient temperature and environment.

When you use the appliance for the first time, smoke or odor may be generated. However, this does not indicate a malfunction. The odor will disappear as you keep using the appliance.

Do not carry or remove the clad plate during heating, cooking or immediately after cooking. Do not touch the drip tray.

The clad plate used for the appliance retains a high degree of heat and takes longer to cool down. Make sure that the temperature has dropped sufficiently before carrying the plate. Touching a hot part (clad plate, drip tray, heater tube, or heat shielding plate) may cause burns.

2 Cook the food.

When the indicator changes to a solid color and the temperature is appropriate, place food on the plate and start cooking. Continue until a desired level of cooking is achieved. In addition to the provided spatula, knives, forks, and other metallic utensils can be used with the clad plate. Freshly made food can be cut directly on the clad plate.

Tip

To prevent oil from splashing, wipe off excessive oil and moisture with a paper towel or the like during cooking.

During cooking, the indicator lighting informs you whether or not the clad plate temperature is appropriate.

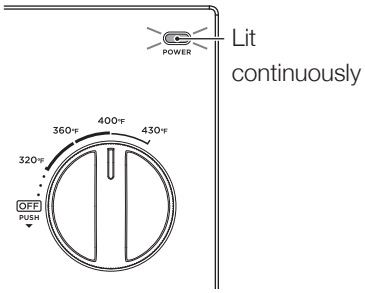

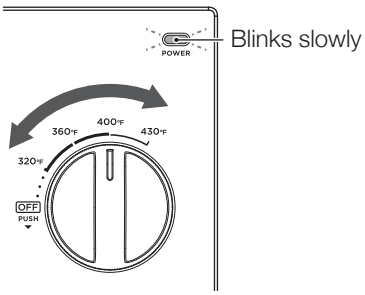

Appropriate temperature

The temperature is within the set temperature range.

Temperature being adjusted

The clad plate temperature is higher/lower than the set temperature.



The indicator may blink slowly during cooking. This indicates that the temperature is being readjusted to restore the set temperature. You do not need to change anything.

■ Temperature guide

Marking	Cooking example
430°F	Yakiniku
400°F	Beef Steak, Seafood, Vegetables
360°F	Garlic Rice*
320°F	Pancake, Crepe

* Garlic Rice is a dish recommended to be cooked using the griddle (sold seperately). Refer to p.24 for details.

RECIPE

Beef Steak

Ingredients

Beef (3/4 in. thick)	1 slice
Salt	1% by weight of the beef
Black pepper	To taste
Olive oil	1 tablespoon

Doneness (medium rare)

1. Sprinkle both sides of the beef with salt and pepper.
2. Heat the clad plate to 400°F. Apply olive oil to the plate. Place the beef and cook one side for 1 minute. Flip the beef and cook for another minute.
3. Cook the edges for about 1 minute.
4. Remove the beef from the clad plate. Let it rest on a cooling rack for 3 minutes.
5. Place the beef on the clad plate again. Cook one side for 45 seconds. Flip the beef and cook for another 45 seconds.
6. Flip the beef and cook one side for 30 seconds. Flip the beef and cook for another 30 seconds. Cut the beef on the plate and it is ready to eat.

Original recipes are available.

BALMUDA The Teppanyaki can achieve a full range of rich flavors.
Check out recipes from the BALMUDA kitchen team and other professionals.

• Website BALMUDA Recipes

■ Food that requires attention before cooking

- Puncture the egg white with a skewer or the like before cooking eggs.
- Open the shells of clams, shellfish, and other shelled food.
- Score or otherwise appropriately prepare sausages, rice cakes, and other foods likely to burst.

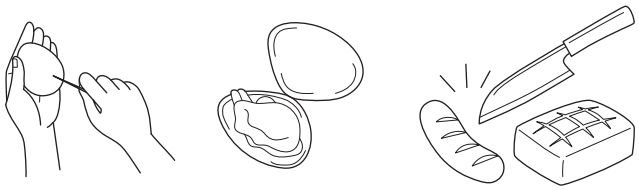

3 Remove the burnt-on food with the spatula provided if it is stuck to the clad plate.

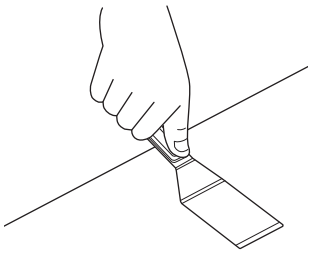

4 Return the temperature setting dial to the OFF position after cooking.

Make sure that the indicator is turned off.

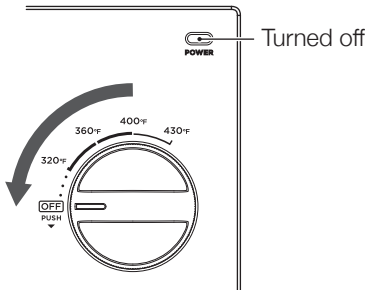

If the appliance is used continuously for two hours or longer, heating will be automatically stopped and the power will be turned off for safety. Return the temperature setting dial to the OFF position, push down and turn the dial clockwise to a desired temperature to continue cooking.

5 Disconnect the power plug from the outlet.

Be sure to return the temperature setting dial to the OFF position before disconnecting the power plug.

6 Perform cleaning according to “Cleaning” (p.17).

Cleaning

Precautions for cleaning

Do not use the appliance unless the main the unit, temperature setting dial, heater tube and heat shielding plate are clean.

Using the appliance unclean may cause fire. Unplug the appliance and allow the clad plate, drip tray, heater tube, and heat shielding plate to cool down sufficiently before performing cleaning.

Unplug the appliance and allow the clad plate, drip tray, heater tube, and heat shielding plate to cool down sufficiently before performing cleaning.

Failure to do so may cause burns and other injuries, electric shock, or malfunction.

Dry the parts completely after cleaning with water and before usage.

Failure to do so may cause electric shock or malfunction.

Firmly hold both sides of the drip tray and keep the tray horizontal when removing it.

If you carry the tray with one hand or tilt the tray while carrying it, it may slip out of your hand due to oil residue, causing injuries.

Do not use alcohols, benzine, thinners, cleansers,* scrub brushes,* etc.

Doing so may cause malfunction, discoloration, deformation, or damage.

* Do not use cleansers or scrub brushes for cleaning the handles of the clad plate, back side of the plate, drip tray, and provided spatula.
* Only the front side of the clad plate can be cleaned with cleansers and scrub brushes (metallic scouring pads can also be used).



Handles of clad plate / back side of plate:
Do not use cleansers or scrub brushes, the coating may come off.

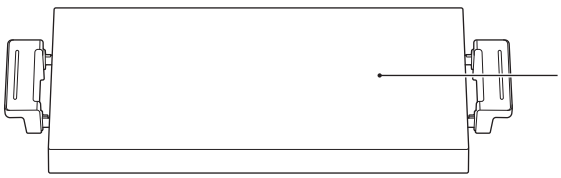

Front side of clad plate:
You can use cleansers, scrub brushes and metallic scouring pads.

Do not use a dishwasher or dish dryer.

■ Clad plate

- Make sure that the power of the appliance is turned off before removing the burnt-on food with the spatula provided.
- Allow the clad plate to cool down sufficiently before removing it. Clean off remnants and other objects stuck to the plate surface with a metallic scouring pad. Hold the handles on both sides of the clad plate and lift it up horizontally. Use a soft sponge containing neutral kitchen detergent to wash the front side of the clad plate. Wipe off the water with a dry cloth and dry the plate thoroughly.
- Do not use a scrub brush for cleaning the handles of the clad plate and the back side of the plate. Use a soft sponge instead.
- The clad plate used for the appliance retains a high degree of heat and takes longer to cool down. Turn off the power of the appliance and leave it for some time after use. Make sure that the temperature has dropped sufficiently before performing cleaning.
- Do not immerse the clad plate in water for cleaning. Doing so may cause deterioration.

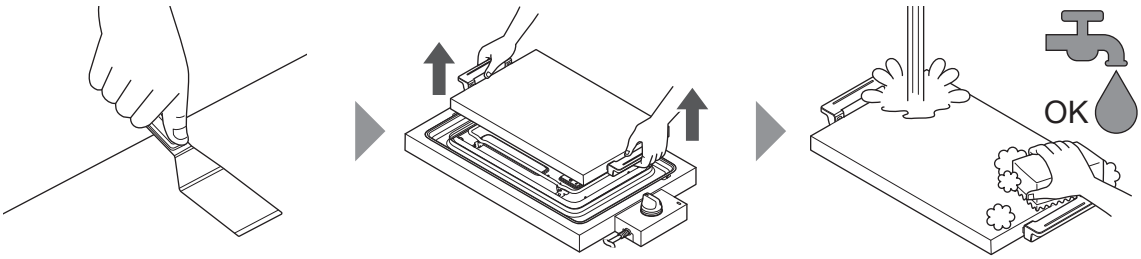

- The support information page on our website describes the cleaning procedure in more detail.

Scan to access

Please contact BALMUDA Support (p.26) for inquiries about cleaning and other issues.

■ Main unit, temperature setting dial, heater tube, and heat shielding plate

- Soak a cloth in neutral detergent and wring it out thoroughly. Use the cloth to wipe off any remnants every time after using the appliance. If you perform cooking with remnants remaining, the remnants may be burned and become stuck, making them difficult to remove. In addition, this may cause burns or fire.
- Make sure that the temperature has dropped sufficiently before performing cleaning.

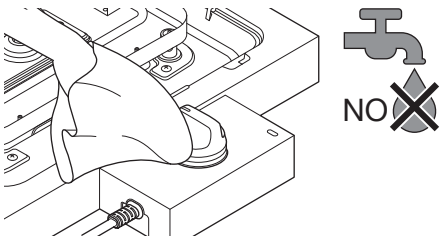

■ Spatula, drip tray

- First wipe off remnants with a paper towel or the like after the temperature has dropped sufficiently. Next, clean with neutral kitchen detergent using a soft sponge or the like and then rinse. Wipe off the water with a dry cloth and dry both items thoroughly.

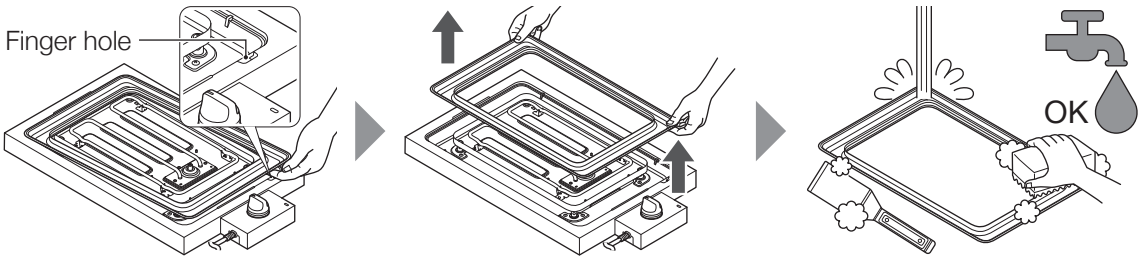

Note: Insert your finger into the finger hole. Firmly hold both sides of the drip tray with both your hands. Lift the tray up while keeping it horizontal.

Troubleshooting

Check the information provided below. Please contact BALMUDA Support (p.26) if the condition does not improve.

⚠ **Be sure to turn off the power before checking the condition of the main unit.**

Issue	● Points to check	▶ Solutions
The power is turned off automatically.	● Is the appliance used continuously for two hours or longer?	▶ The auto-off function has been activated. If the appliance is used continuously for two hours or longer, heating will be automatically stopped and the power will be turned off for safety. Return the temperature setting dial to the OFF position, push down and turn the dial clockwise to a desired temperature to continue cooking.
The clad plate cannot be heated. (Electricity is not being supplied.)	● Is the power plug disconnected from the outlet?	▶ Return the temperature setting dial to the OFF position and insert the power plug into the outlet.
	● Was the temperature setting dial operated immediately after the power plug was inserted into the outlet?	▶ If the temperature setting dial is operated too soon, the error indication (p.22) may be activated. Wait for some time before performing operation.
	● Is the clad plate unsteady or tilted?	▶ Set the clad plate securely in place. After setting the clad plate on the main unit, hold the handles with both your hands and move the plate back and forth and side to side to make sure it is fitted securely into the main unit.
	● Is there any foreign object attached to the back side of the clad plate or the heat shielding plate?	▶ Remove any foreign object.
	● Was the power plug inserted while the temperature setting dial was set to a position other than OFF?	▶ Return the temperature setting dial to the OFF position. Push down and turn the temperature setting dial clockwise to turn on the power.
	● Is the temperature setting dial OFF?	▶ Check whether the temperature setting dial is set to OFF or between two of the markings. Set the dial to a temperature according to the food.
The indicator keeps blinking slowly and will not change to a solid color. (The appropriate temperature cannot be achieved.)	● Is the appliance used in a place with an extremely high/low ambient temperature?	▶ If the appliance is used in such a place with an extremely high/low ambient temperature, the appropriate temperature may not be achieved (the indicator may not change to a solid color) because heating or cooling of the clad plate is not sufficient.
The indicator continues to blink quickly.	● This is an error indication.	▶ Refer to “Error Indications” (p.22). If the problem is not solved, disconnect the power plug and contact BALMUDA Support (p.26).
It takes longer to cook the food.	● Is the indicator blinking slowly?	▶ Wait for the indicator to change to a solid color and the temperature to be appropriate before starting cooking.

Issue	● Points to check	▶ Solutions
It takes longer to cook the food.	● Is the set temperature low?	▶ Refer to “Temperature guide” (p.15).
	● Is the clad plate surface thoroughly cleaned?	▶ Clean the clad plate.
	● Is the food frozen?	▶ Defrost the food before cooking.
The food is burnt excessively.	● Is the set temperature too high?	▶ Decrease the set temperature and heat the food slowly.
	● Is the clad plate dirty with oil from food or burnt-on food?	▶ Clean the clad plate.
It takes longer to cook the food fully.	● Is the food frozen?	▶ Defrost the food before cooking.
	● Is the amount of food too much?	▶ Adjust the amount of food.
The food is only half-cooked or the inside is not cooked.	● Is the food frozen?	▶ Defrost the food before cooking.
	● Is the set temperature too high?	▶ Decrease the set temperature and heat the food slowly. (When heating at a high temperature, some foods will get cooked only on the surface. How well the heat penetrates will vary upon the food and should be adjusted according to your preference.)
Smoke or odor is generated.	● Is there any foreign object or water between the clad plate and the main unit?	▶ Lift up the clad plate and check whether any foreign object or water remains. Take care not to touch the hot part.
	● Is the clad plate dirty with oil from food or burnt-on food?	▶ Clean the clad plate.
	● Is it immediately after the appliance was used for the first time?	▶ Lift up the clad plate and check whether any foreign object remains. ▶ You may notice an odor when the appliance is used for the first time. However, it will gradually disappear as you continue using the appliance. Keep using the appliance without any changes.
The clad plate does not cool down easily.	● Is the temperature setting dial set to the OFF position? ● Has a sufficient time elapsed since the power was turned off?	▶ The clad plate used for the appliance retains a high degree of heat and takes longer to cool down. Turn off the power of the appliance and leave it for some time after use. Make sure that the temperature has dropped sufficiently before performing cleaning.
The burnt-on food on the clad plate cannot be removed.	● Is a soft sponge or the like used for cleaning?	▶ Use a metallic scouring pad or the provided spatula to remove the burnt-on food. Metallic scouring pads and the provided spatula can be used because the surface of the clad plate of the appliance is not coated. Small scratches will appear as you use the product but this will not affect the outcome of the cooking. Do not use scrub brushes or the provided spatula for cleaning the handles of the clad plate or the back side of the plate because the coating may come off. There are welding traces from the manufacturing process on the back side of the clad plate. These are not grime or defects.

Issue	Reason
During use, you hear a clicking sound or squeaking noise.	This is a sound from thermal expansion of the heater tube or operating noise from internal parts of the main unit during heating. This is not a malfunction. Keep using the appliance without any changes.
The indicator keeps blinking slowly and then changes to a solid color.	The temperature is being adjusted. The clad plate temperature is appropriate when the indicator changes to a solid color. Keep using the appliance without any changes.
There is a dent in the clad plate surface.	This dent was produced during the manufacturing process of the appliance. It poses no problem with using the appliance as is.
The clad plate is discolored.	Discoloration may occur due to oil from the food or heat. However, it poses no problem for use regarding the quality.
When you wipe the clad plate with a cloth or the like, a black substance attaches to the cloth.	This is due to an oxide film on the stainless steel surface attaching to the cloth. Oxide films are naturally formed in the surrounding air. It poses no hygiene problem.

Error Indications

The indicator will blink if an error is detected.

There are the following types of error indication.

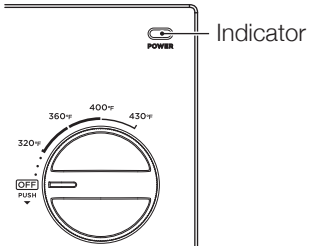

Abnormal position of temperature setting dial

Lighting pattern



Blinks four times → Turned off → Blinks four times →

Blinks repeatedly and will not change to a solid color.

● Points to check	▶ Solutions
● Was the power plug inserted into the outlet while the temperature setting dial was set to a position other than OFF?	▶ Return the temperature setting dial to the OFF position. Push down and turn the temperature setting dial clockwise to turn on the power.
● Is the temperature setting dial stopped between two of the markings?	▶ Turn the temperature setting dial so it is aligned with a marking. If the temperature setting dial is left between two of the markings for some time, heating will be stopped for safety. Return the temperature setting dial to the OFF position if the clad plate cannot be heated. Disconnect the power plug from the outlet and insert the plug into the outlet again. Set the dial to a desired temperature.
● Was the temperature setting dial operated immediately after the power plug was inserted into the outlet?	▶ Insert the power plug into the outlet and wait for some time before performing operation.

Auto off

Lighting pattern



Blinks two times → Turned off → Blinks two times → Turned off ⋯→ OFF

Blinks repeatedly and the power is automatically turned off after 10 minutes.

● Points to check	▶ Solutions
● Is the appliance used continuously for two hours or longer?	▶ If the appliance is used continuously for two hours or longer, the auto-off function is activated for safety. When 10 minutes have elapsed after the blinking started, heating will be automatically stopped and the power will be turned off. Return the temperature setting dial to the OFF position and push down and turn the dial clockwise to a desired temperature to continue cooking.

Malfunction of appliance

Lighting pattern



Blinks repeatedly for a longer time.

● Points to check	▶ Solutions
● The appliance may be malfunctioning.	▶ Disconnect the power plug from the outlet, and contact BALMUDA Support (p.26).

Accessory Set for BALMUDA The Teppanyaki (Sold Separately)

A Griddle & Cover set is available to increase your enjoyment of using BALMUDA The Teppanyaki. The griddle can be combined with the main unit according to what you want to cook, allowing you to further enjoy cooking.

■ Model number: K10-A500

■ Item name: Griddle & Cover

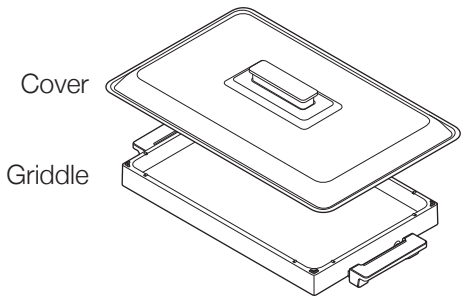

Notes:

- The spatula provided with the main unit is specifically for the clad plate. Do not use the spatula together with the griddle.
- Carefully read the instruction manual included with Griddle and Cover for BALMUDA The Teppanyaki (sold separately) before using the set.

Griddle and Cover for BALMUDA The Teppanyaki (sold separately) can be purchased from the BALMUDA website and authorized dealers.

To purchase: **https://us.balmuda.com/collections/teppanyaki-accessories**

Note: Other consumables and exclusive parts can also be purchased from the BALMUDA website. Please contact BALMUDA Support (p.26) for details.

Product Registration

Register your product to receive convenient product support and to sign up for news and exclusive offers.

Register here

https://us.balmuda.com/product-register

Warranty Policy and Privacy Policy

For information on our warranty and privacy policies, please refer to the BALMUDA website (https://us.balmuda.com).

Disposal

Observe the regulations in your region when disposing of the appliance and its parts.

Product Specifications

Model	K10H Series
Applications	Household, indoor
Power supply	120 V ∿, 60 Hz
Rated power consumption	1120 W
Main unit dimensions	W 22.6 in. × D 13.1 in. × H 3.5 in.[1]
Main unit weight	Approx. 11.5 lb.[2]
Adjustment temperature range	320°F–430°F
Power cord length	Approx. 6.5 ft.

Notes:

1. The main unit dimensions are values for when the clad plate is installed. The power cord length is not included.
2. The main unit weight is the value for when the clad plate is installed.

Customer support

BALMUDA SUPPORT

PHONE 833-333-1033

WEB https://us.balmuda.com

BALMUDA Inc. 5-1-21 Kyonancho, Musashino, Tokyo 180-0023, JAPAN
Importer: transcosmos America, Inc. 879 West 190th Street #410, Gardena, CA 90248
Note: Store this manual with great care.