PRORUN®

20V/// Lithium-Ion

# Operator's Manual

# HAND HELD BLOWER

## MODEL: PBL120

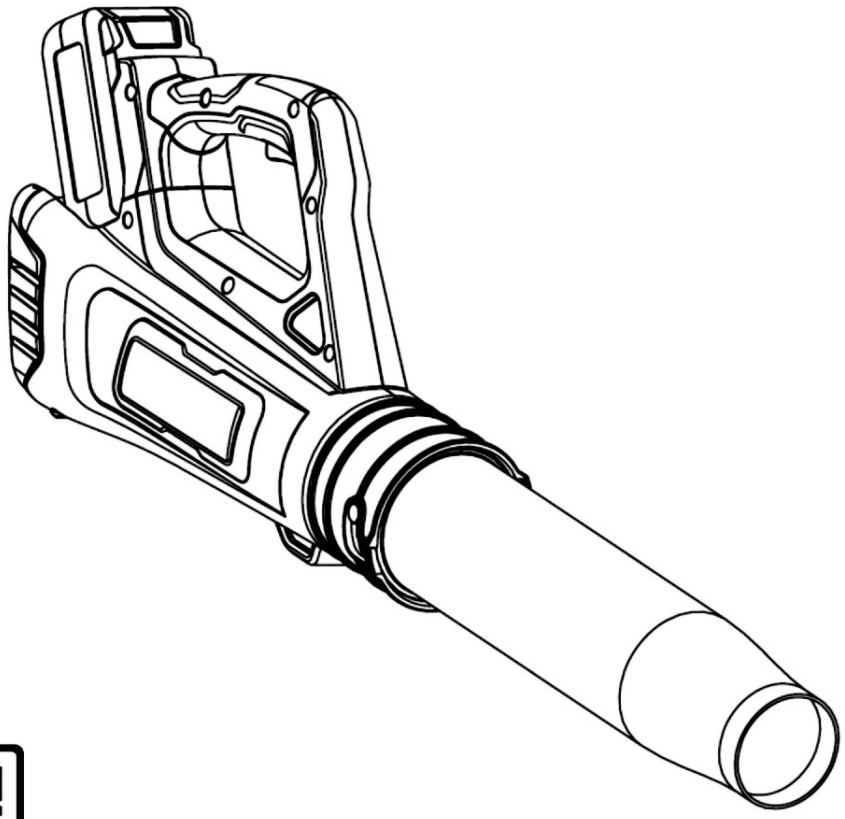

Everything PRORUN

**Before charging, read the instructions.**

⚠ **IMPORTANT - READ CAREFULLY BEFORE USE**

⚠ **IMPORTANT SAFETY INSTRUCTIONS – SAVE THESE INSTRUCTIONS**



**WARNING:** To reduce the risk of injury, the user must read and understand the Operator's Manual before using this product. Save these instructions for future reference.

Please let us know what you think.
To leave a review and see our full line of products, visit:

**proruntech.com** ★★★★★
1-844-905-0882, info@proruntech.com

**Version: B - Issue Date: 2023/03/31**

**Table of Contents**


1. GENERAL MACHINE SAFETY WARNINGS Page 1
2. SAFETY INSTRUCTIONS FOR BLOWER Page 5
3. TRANSPORTING AND STORAGE Page 6
4. BATTERY CHARGER AND BATTERY Page 7
5. SYMBOLS Page 9
6. SPECIFICATIONS Page 11
7. KNOW YOUR BLOWER Page 12
8. BATTERY AND CHARGER OPERATION Page 13
9. ASSEMBLY INSTRUCTIONS Page 15
10. OPERATIONS Page 16
11. ENVIRONMENTAL PROTECTION Page 16
12. MAINTENANCE Page 17
13. TROUBLESHOOTING Page 17
14. EC DECLARATION Page 18

# 1. GENERAL MACHINE SAFETY WARNINGS

⚠ **WARNING Read all safety warnings, instructions, illustrations, and specifications provided with this machine.** *Failure to follow the warnings and instructions may result in electric shock, fire, and/or serious injuries.*
**Save all warnings and instructions for future reference.**
*The term "machine" in all of the warnings listed below refers to your battery operated (cordless) machine.*

## • Work area safety

**a) Keep work area clean and well lit.** *Cluttered or dark areas invite accidents.*
**b) Do not operate machines in explosive atmospheres, such as in the presence of flammable liquids, gases, or dust.** *Machines create sparks which may ignite the dust or fumes.*
**c) Keep children and bystanders away while operating a machine.** *Distractions can cause you to lose control.*

## • Electrical safety

**a) Avoid body contact with earthed or grounded surfaces such as pipes, radiators, ranges, and refrigerators.** *There is an increased risk of electric shock if your body is earthed or grounded.*
**b) Do not expose machines to rain or wet conditions.** *Water entering a machine will increase the risk of electric shock.*
**c) Do not abuse the battery charger cord. Never use the cord for carrying.** *Keep cord away from heat, oil, sharp edges, or moving parts. Damaged or entangled cords increase the risk of electric shock.*

## • Personal safety

**a) Stay alert, watch what you are doing, and use common sense when operating a machine. Do not use a machine while you are tired or under the influence of drugs, alcohol, or medication.** *A moment of inattention while operating machines may result in serious personal injury.*
**b) Use personal protective equipment. Always wear eye protection.** *Protective equipment such as dust mask, non-skid safety shoes, hard hat, or hearing protection used for appropriate conditions will reduce personal injuries.*
**c) Prevent unintentional starting. Ensure the switch is in the off position before connecting battery pack and/or to power source, picking up or carrying the machine.** *Carrying machines with your finger on the switch or energizing*

*machines that have the switch on invites accidents.*

**d) Do not overreach. Keep proper footing and balance at all times.** *This enables better control of the machine in unexpected situations.*

**e) Dress properly. Do not wear loose clothing or jewelry. Keep your hair, clothing, and gloves away from moving parts.** *Loose clothes, jewelry, or long hair can be caught in moving parts.*

**f) Do not let familiarity gained from frequent use of tools allow you to become complacent and ignore tool safety principles.** *A careless action can cause severe injury within a fraction of a second.*

## • Machine use and care

**a) Do not force the machine. Use the correct machine for your application.** *The correct machine will do the job better and safer at the rate for which it was designed.*

**b) Do not use the machine if the switch does not turn it on and off.** *Any machine that cannot be controlled with the switch is dangerous and must be repaired.*

**c) Remove the battery pack from the machine before making any adjustments, changing accessories, or storing machines.** *Such preventive safety measures reduce the risk of starting the power tool accidentally.*

**d) Store idle machines out of the reach of children and do not allow persons unfamiliar with the machine or these instructions to operate the machine.** *Machines are dangerous in the hands of untrained users.*

**e) Maintain machines and accessories. Check for misalignment or binding of moving parts, breakage of parts, and any other condition that may affect the machine's operation. If damaged, have the machine repaired before use.** *Many accidents are caused by poorly maintained machines.*

**f) Keep handles and grasping surfaces dry, clean, and free from oil and grease.** *Slippery handles and grasping surfaces do not allow for safe handling and control of the tool in unexpected situations.*

## • Battery tool use and care

**a) Recharge only with the charger specified by the manufacturer.** *A charger that is suitable for one type of battery pack may create a risk of fire when used with another battery pack.*

**b) Use machines only with specifically designated battery**

**packs.** *Use of any other battery packs may create a risk of injury and fire.*

**c) When battery pack is not in use, keep it away from other metal objects, like paper clips, coins, keys, nails, screws, or other small metal objects, which can make a connection from one terminal to another.** *Shorting the battery terminals together may cause burns or a fire.*

**d) Under abusive conditions, liquid may be ejected from the battery; avoid contact. If contact accidentally occurs, flush with water. If liquid contacts eyes, additionally seek medical help.** *Liquid ejected from the battery may cause irritation or burns.*

**e) Do not use a battery pack or tool that is damaged or modified.** *Damaged or modified batteries may exhibit unpredictable behavior resulting in fire, explosion, or risk of injury.*

**f) Do not expose a battery pack or tool to fire or excessive temperature.** *Exposure to fire or temperature above 212°F (100°C) may cause fire and explosion.*

**g) Follow all charging instructions and do not charge the battery pack or tool outside the temperature range specified in the instructions.** *Charging improperly or at temperatures outside the specified range may damage the battery and increase the risk of fire.*

- **Service**

a) **Contact PRORUN Customer Service with questions or issues with this machine.** *This will ensure that the safety of the power tool is maintained.*

**b) Never service damaged battery packs.** *Service of battery packs should only be performed by the manufacturer or authorized service providers.*

⚠**WARNING: Read all instructions before using this appliance.**

⚠**WARNING: When using electric gardening appliances, basic safety precautions should always be followed to reduce the risk of fire, electric shock, and personal injury, including the following:**

- **Training**

**a) Read the instructions carefully.** *Be familiar with the controls and the correct use of the machine.*

**b) Working with the blower can be strenuous.** *The operator must be in good physical condition and mental health. Never allow children, persons with reduced physical, sensory, or mental capabilities or lack of experience and knowledge or people unfamiliar with these instructions to use the machine. Local*

*regulations may restrict the age of the operator.*
**c) Keep in mind, that the operator or user is responsible for accidents or hazards occurring to other people or their property.**

## • Preparation

**a) This blower is designed for blowing leaves, grass, and similar lightweight debris from yards, gardens, sidewalks, driveways, decks, patios, and comparable surfaces in the manner and in the conditions described in this manual.** *Use of the blower for operations different than intended could result in serious injury or death.*
*– Blow leaves, grass, and similar lightweight debris only.*
*– Do not use it for any other purposes. Misuse may result in personal injury or property damage, including damage to the machine.*
*– Use the blower, battery, and charger only as described in this manual.*
**b) Obtain ear protection and safety glasses.** *Wear them at all times while operating the machine. While operating the machine always wear heavy-duty work gloves, proper clothing, long trousers, and substantial footwear with non-slip soles. Do not operate the machine when barefoot or wearing open sandals. Avoid wearing clothing that is loose fitting or that has hanging cords or ties.*
**c) Secure hair above shoulder level before starting work.** *Do not wear loose clothing or jewelry that can be drawn into the air inlet.*
**d) To reduce the risk of electric shock:**
*– Do not expose the blower to rain, water, or excessive moisture.*
*– Store the blower indoors.*
*e*) **Always release the variable speed trigger and remove the battery before assembling, transporting, adjusting, inspecting, cleaning, servicing, maintaining, or storing the blower and any time it is not in use.**
**f) Never modify this blower in any way.**
**g) Do not put any object into the openings of the blower.**
**h) Do not use the blower with any openings blocked.**
**i) Keep the blower free of dust, lint, hair, and anything that might reduce air flow.**
**j) If the blower is dropped or subjected to similar heavy impacts or if the machine should start making any unusual noise or vibration, immediately shut off the power source, remove the battery, and take the following steps before restarting and operating the machine:**

*– Inspect for damage and function. Replace or repair any damaged parts. Check for and tighten any loose parts.*
*– Check that the controls and safety devices are working properly.*
*– Check that the battery has not been damaged. Never use or charge a malfunctioning, damaged, cracked, leaking, or deformed battery.*
**k) Operate the machine in a recommended position and only on a firm, level surface.**
**l) Do not operate the machine on a paved or gravel surface where projected material could cause injury.**
**m) Before using, always visually inspect to see that the bolts and other fasteners are secure, the housing is undamaged, and that guards and screens are in place.** *Replace worn or damaged components in sets to preserve balance. Replace damaged or unreadable labels. Never operate the blower with defective guards or shields, or without other safety devices.*
**n) Do not use a battery pack or appliance that is damaged or modified.** *Damaged or modified batteries may exhibit unpredictable behavior resulting in fire, explosion, or risk of injury.*
**o) Maintain blower with care.** *Keep handles dry, clean, and free from moisture, oil, and grease.*

## 2. SAFETY INSTRUCTIONS FOR BLOWER

- **General blower safety warnings:**

**a) Misuse may result in personal injury and property damage.**
**b) In the event of an emergency or breakdown:**
*– Switch off the motor immediately and remove the battery.*
**c) Never attempt to modify or override the controls or safety devices.** *If your blower or any part is damaged or does not function properly, take it to your authorized servicing dealer. Do not use the blower until the problem has been corrected.*
**d) Never operate the machine while people, especially children, or pets are nearby.** *Stay alert and turn the blower off if a child or any other person enters the working area. Use extreme care when approaching blind corners, doorways, shrubs, trees, or other objects that may obscure your view of a child who may run into the path of the blower.*
**e) Do not overreach - keep proper footing and balance at all times. Always be sure of your footing on slopes and to walk, never run.**
**f) Remove the battery from the blower:**
*– Whenever you leave the machine.*
*– Before clearing a blockage.*
*– Before checking, cleaning, or working on the machine.*

*– After striking a foreign object to inspect the machine for damage.*
*– If the machine starts to vibrate abnormally, for an immediate check.*
**g) Always hold the blower firmly with one hand when you are working.** *Wrap your fingers tightly around the handle, keeping the handle cradled between your thumb and forefinger.*
**d) Never work on a ladder, on a roof, in a tree, or while standing on any other insecure support.**
**e) Operating the blower in certain dry, dusty conditions may cause static electricity to build up in the blower tube, nozzle, and housing.** *This static electricity may discharge suddenly with a spark. Never operate the blower in a location where combustible gases, liquids, vapors, dusts or other combustible materials and substances are present.*
**f) Using the blower to spread herbicides, pesticides, fertilizers, or other chemical substances can be dangerous and may cause serious or fatal injury to persons and damage to the environment.**
**g) Never use the blower to disperse or spread chemicals of any kind.**
**h) Use blower only with specifically designated battery packs. Use of any other battery packs may create a risk of injury and fire.**
**i) The blower fan between the air intake and output opening rotates whenever the motor is running.**
To reduce the risk of injury from contact with the blower fan:
*– Never operate the blower with a missing, cracked, or worn intake screen or housing.*
*– Never operate the blower without a properly mounted blower tube and nozzle.*
*– Keep hair, loose clothing, fingers, and all parts of the body away from openings and moving parts of the blower.*
**j) Prevent unintentional starting. Release the variable speed trigger and remove the battery immediately in the event of accident or breakdown.**
**k) Do not to touch moving hazardous parts before the battery is removed from the machine.**

## 3. TRANSPORTING AND STORAGE

**a) Unintentional starting may result in personal injury or property damage.** *Remove the battery before inspecting the blower or carrying out any cleaning, maintenance, repair work, before storing, and any other time the blower is not in use.*
**b) Improper storage can result in unauthorized use, damage to the machine, battery, and charger or an increased risk of fire,**

**electric shock, and other personal injuries or property damage.**
*– Before storing, always unplug the charger from the wall outlet and remove the battery.*
*– Store the machine, battery, and charger indoors in a dry, secure place out of the reach of children and other unauthorized users.*

## 4. BATTERY CHARGER AND BATTERY

**This section describes the battery and battery charger safety for your battery product. Only use original batteries for products and only charge them in an original battery charger.**

### • Battery charger

**The battery chargers are only used for charging of PRORUN® 20V replacement batteries.**
– This manual contains important safety and operating instructions for battery charger.
– Before using battery charger, read all instructions and cautionary markings on battery charger, and product using battery.

⚠ **CAUTION! Charge only Li-ion batteries recommended by the manufacturer.**

– Other types of batteries may burst causing personal injury and damage.
– If the shape of the plug does not fit the power outlet, use an attachment plug adapter of the proper configuration for the power outlet.

⚠ **WARNING! Minimize the risk of electric shock or short circuit as follows:**
– Never insert any object into the charger's cooling slots. Do not try to dismantle the battery charger.
– Never connect the charger terminals to metal objects as this can short circuit the battery charger.
– Use approved and intact wall sockets.

⚠ **WARNING! This machine produces an electromagnetic field during operation. This field may under some circumstances interfere with active or passive medical implants. To reduce the risk of serious or fatal injury, we recommend persons with medical implants consult their physician and the medical implant manufacturer before operating this machine. Do not use product when a thunderstorm is approaching.**
– Unplug the charger from the wall outlet before inspecting or cleaning the charger.
– Regularly check that the battery charger connection wire is intact and that there are no cracks in it. Replace the charger if the power supply cord becomes worn or damaged. The power supply cord

cannot be repaired or replaced.
– Never carry the battery charger using the cord and never pull out the plug by pulling the cord.
– Keep all cords and extension cords away from water, oil, and sharp edges. Make sure the cord is not pinched in doors, fences, or the like. Otherwise, it can cause the object to become live.
– Never clean the battery or the battery charger with water.
– Never allow the children to use the battery charger. When charging, the charger must be placed in a well-ventilated area and under a roof to keep out moisture.
**⚠WARNING! Do not charge non-rechargeable batteries in the battery charger or use them in the machine.**
**⚠WARNING! Do not use the battery charger close to corrosive or flammable materials. Do not cover the battery charger. Pull out the plug to the battery charger in the event of smoke or fire.**
– Use the battery charger only when the surrounding temperature is between 41 °F (5 °C) and 113 °F (45 °C ). Use the charger in an environment which is well ventilated, dry, and free from dust.
**Do not use:**
– A faulty or damaged battery charger
– The battery in the battery charger outdoors.
**Do not charge:**
– Or never use a faulty, damaged, or deformed battery.
– The battery in the rain or in wet conditions.
– The battery in direct sunlight.
– The battery in the battery charger outdoors.

- **Battery**

– Do not dismantle, open or shred secondary batteries.
– Keep batteries out of the reach of children.
– Do not expose batteries to heat or fire. Avoid storage in direct sunlight.
– Do not short-circuit a battery. Do not store batteries haphazardly in a box or drawer where they may short-circuit each other or be short-circuited by other metal objects.
– Do not remove a battery from its original packaging until required for use.
– Do not subject batteries to mechanical shock.
– In the event of a cell leaking, do not allow the liquid to come in contact with the skin or eyes. If contact has been made, wash the affected area with copious amounts of water and seek medical advice.
– Do not use any charger other than that specifically provided for use with the equipment.
– Do not use any battery which is not designed for use with the

equipment.
– Always purchase the battery recommended by the device manufacturer for the equipment.
– Keep batteries clean and dry.
– Wipe the battery terminals with a clean dry cloth if they become dirty.
– Secondary batteries need to be charged before each use. Always use the correct charger and refer to the manufacturer's instructions or equipment manual for proper charging instructions.
– Do not leave a battery on prolonged charge when not in use.
– After extended periods of storage, it may be necessary to charge and discharge the batteries several times to obtain maximum performance.
– Retain the original product literature for future reference.
– Use the battery only in the application for which it was intended. When possible, remove the battery from the equipment when not in use.
– Dispose of properly.

## 5. SYMBOLS

This page depicts and describes safety symbols that may appear on this product. Read, understand, and follow all instructions on the machine before attempting to assemble and operate it.

| | | |
|---|---|---|
|  | Safety Alert | Because a blower is a high-speed battery-powered tool, special safety precautions must be observed to reduce the risk of personal injury. |
|   | Read the Operator's Manual | It is important that you read, fully understand, and observe the following safety precautions and warnings. Read the operator's manual and the safety precautions periodically. |
|  | Do not expose to rain | Protect the tool, battery, and charger from rain, water, liquids, and damp conditions. Keep the tool, battery, and charger dry. |
|  | Wear eye and ear protection | Always wear safety goggles and ear protection when operating this product. |
|   | Keep bystanders away | Keep all bystanders at least 17 ft. (5 m) away. |
|  | Wear protective gloves | Always wear heavy duty nonslip gloves when handling the machine. |
|  | Wear safety footwear | Wear sturdy boots with nonslip soles. Never wear sandals, flip-flops or go barefoot. |

| | | |
|---|---|---|
| 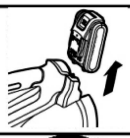 | Remove the battery | Remove the battery from blower before cleaning or maintenance. |
|  | Never expose to fire | Risk of fire, explosion and/or burns, including chemical burns. Never incinerate or place the battery on or near fires, stoves, or other high-temperature locations. |
|  | Never heat the battery | Do not disassemble, crush, heat above 212°F (100°C). Never expose the battery to high pressures. |
|  | Never immerse in water | To reduce the risk of personal injury or property damage from a short circuit, fire, or explosion. Never immerse the battery in water or other liquids. |
|  | Recycling | Take the blower, charger, accessories, and packaging to an approved disposal site for environmentally friendly recycling. |
|  | Waste | Symbols on the product or its packaging indicate that this product cannot be handled as domestic waste. This product must be deposited at an appropriate recycling facility. |
|  | Indoor use only | Use and store charger only indoors in dry rooms. |
|  | Fail-safe transformer | For safer electronic isolation. |
|  | Double insulated | To reduce electric shock protection. |

Below units may be used in manual:

| | | |
|---|---|---|
| V | Volts | Voltage |
| A | Amperes | Current |
| Hz | Hertz | Frequency(cycles per second) |
| W | Watts | Power |
| min | Minutes | Time |
| mm | Millimeter | Length or size |
| in. | Inch | Length or size |
| Kg | Kilogram | Weight |
| Lbs. | Pound | Weight |
| RPM | Revolutions per minute | Rotational speed |

⚠ **DANGER! People with electronic devices, such as pacemakers, should consult their physician(s) before using this product.** Operation of electrical equipment in close proximity to a heart pacemaker could cause interference or failure of the pacemaker.

# 6. SPECIFICATIONS

Type PBL120

| | |
|---|---|
| Voltage | 20V Max* Lithium ion |
| No load speed | 15300 |
| Blow speed | 85 MPH (38 m/s) |
| Air capacity | 317 CFM (9 $m^3$ / min) |
| Machine weight | 3.74 Lbs. (1.75 Kg) without battery |

*Voltage measured without workload. Initial battery voltage reaches maximum of 20 volts.

Nominal voltage is 18 volts.

**ACCESSORIES**

| | |
|---|---|
| Battery | PB12040 |
| Charger | PC120 |

We recommend that you purchase your accessories from the same store that sold you the tool.

Use good quality accessories marked with a well-known brand name. Choose the type according to the work you intend to undertake. Refer to the accessory packaging for further details. Store personnel can assist you and offer advice.

**NOISE/VIBRATION INFORMATION**

| | |
|---|---|
| Sound power level ,measured according to ISO22868 , dB(A): | 84.3 |
| Sound pressure level ,measured according to EN50636-2-100 ,dB(A): | 76.6 |

**Vibration levels**

Vibration levels at handles, measured according to ISO 22867, 1.0$m/s^2$ .

**Warning**!

The vibration emission value during actual use of the power tool can differ from the declared value depending on the ways in which the tool is used attendant on the following examples and other variations on how the tool is used:

How the tool is used and the materials is cut or drilled.

The tool being in good condition and well maintained.

The use the correct accessory for the tool and ensuring it is sharp and in good condition.

The tightness of the grip on the handles and any anti vibration accessories are used.

And the tool is being used as intended by its design and these instructions.

**This tool may cause hand-arm vibration syndrome if its use is not adequately managed.**

**Warning**!

To be accurate, an estimation of exposure level in the actual conditions of use should also take account of all parts of the operating cycle such as the times when the tool is switched off and when it is running idle but not actually doing the job. This may significantly reduce the exposure level over the total working period.

# 7. KNOW YOUR BLOWER

## Components and Controls

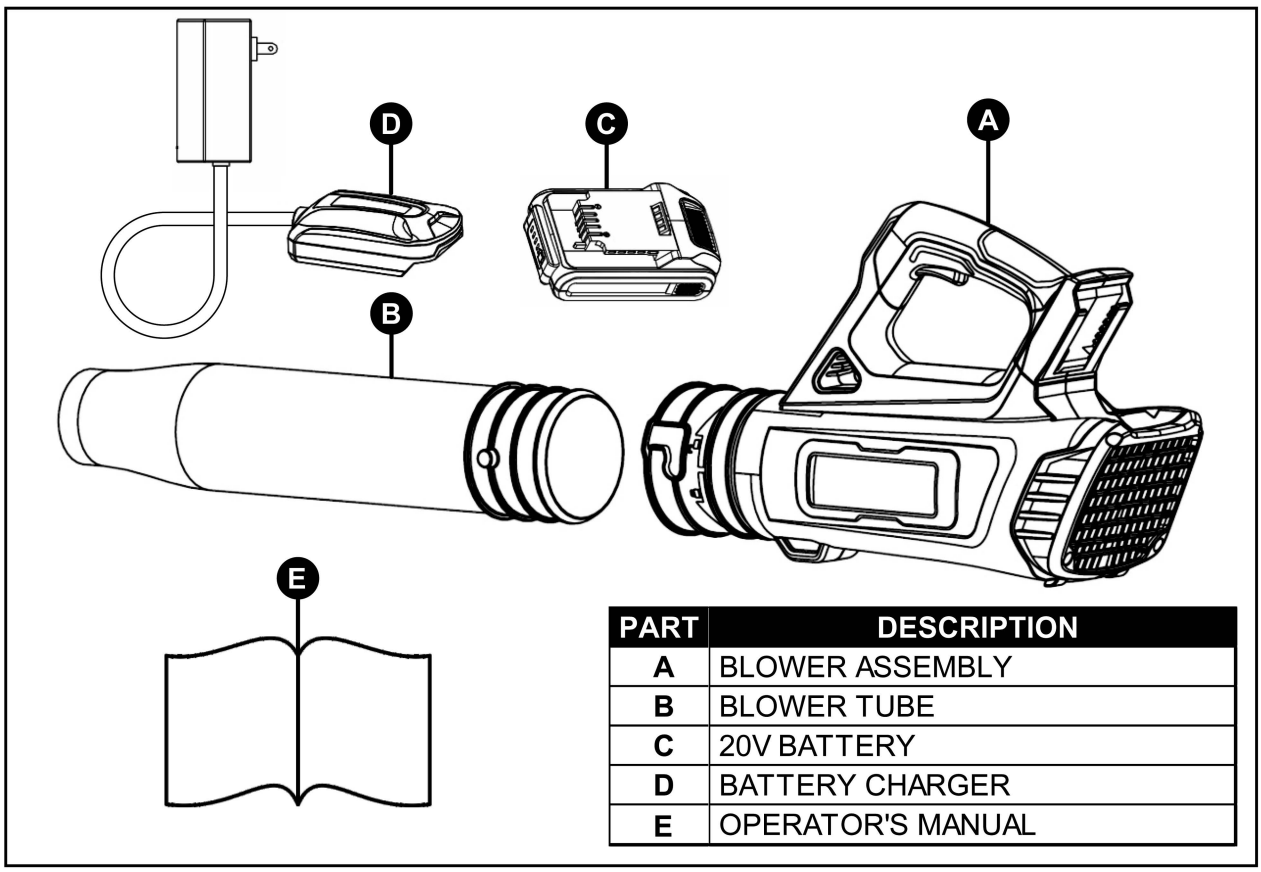


| PART | DESCRIPTION |
|---|---|
| A | BLOWER ASSEMBLY |
| B | BLOWER TUBE |
| C | 20V BATTERY |
| D | BATTERY CHARGER |
| E | OPERATOR'S MANUAL |

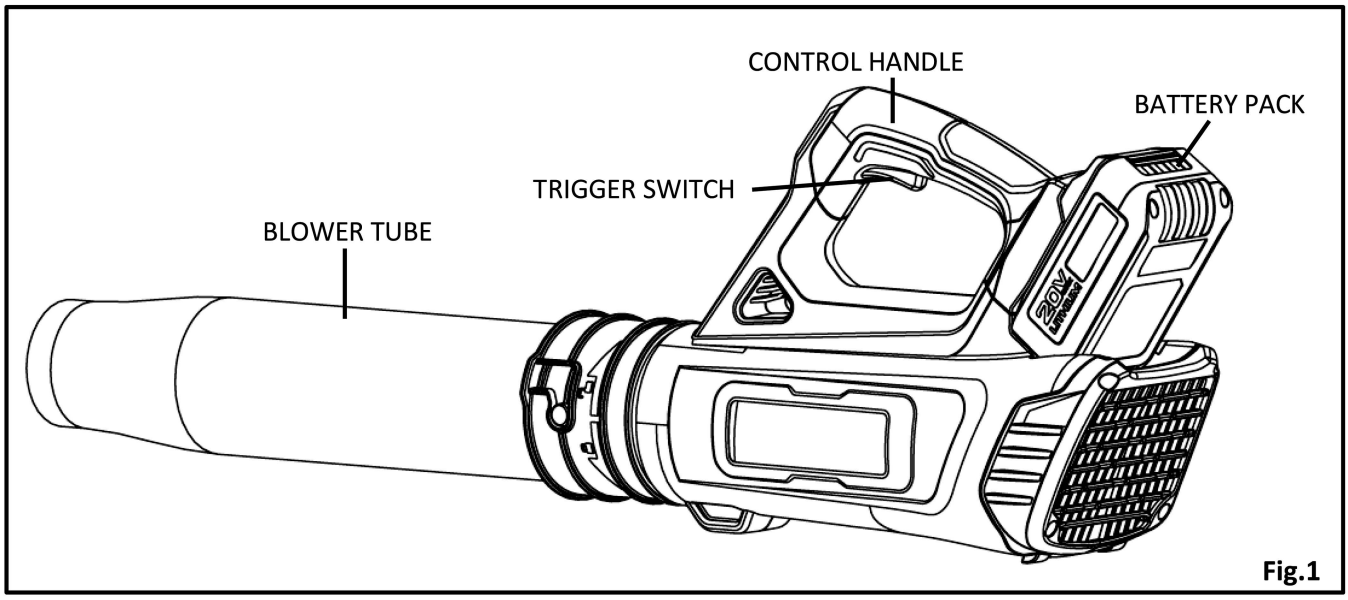


**Fig.1**

**KNOW YOUR 20V CORDLESS BLOWER** (See Fig.1)

The safe use of this product requires an understanding of the information on the product and in this operator's manual as well as a knowledge of the project you are attempting. Before use of this product, familiarize yourself with all operating features and safety rules.

# 8. BATTERY AND CHARGER OPERATION

This section describes the battery and battery charger safety for your battery product.

Only use PRORUN® original batteries for PRORUN products and only charge them in an original battery charger from PRORUN. The batteries are software encrypted.

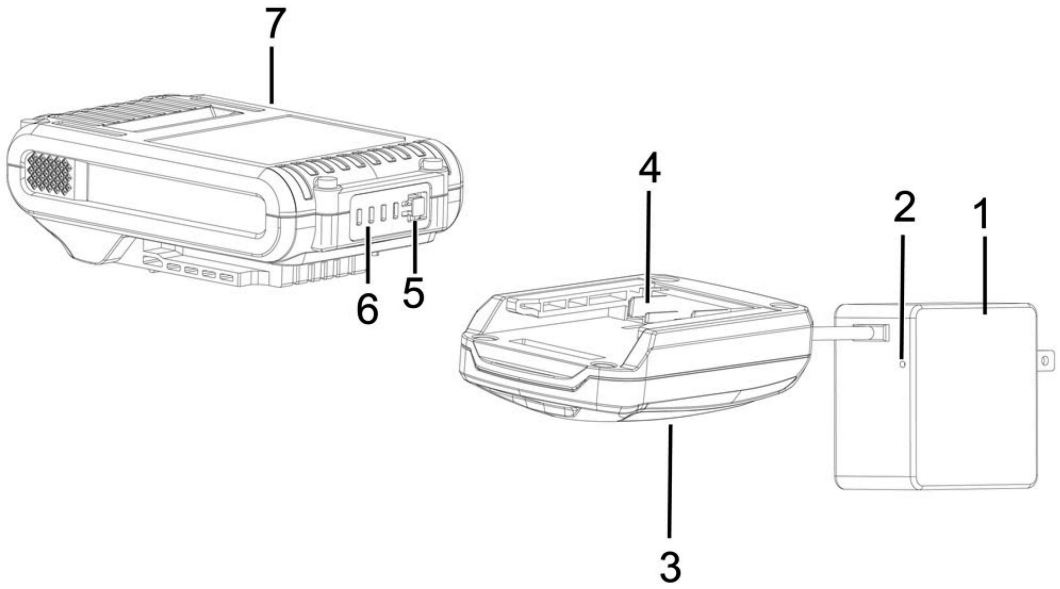


1. Electric plug
2. Charging indication LED
3. Battery charger
4. Electrical terminal
5. Electric energy button
6. Electric energy LED light
7. Battery

**NOTE!** The specifications of the plugs can be different by country, the picture is only for reference. If the shape of the plug does not fit the power outlet, use an attachment plug adapter of the proper configuration for the power outlet.

⚠ **WARNING! Risk of electric shock and short circuiting.** Use approved and intact wall sockets. Make sure that the power cord is not damaged. Replace power cord if it appears to be damaged in any way.

## ● Connect the battery charger

Connect the battery charger (3) to the voltage and frequency specified on the rating plate.

– Put the electric plug (1) in an earthed or grounded socket-outlet.

– The charging indication LED (2) will shine green indicating that the charger is working correctly.

– After 5 second, the light will turn off if no battery in the charger.

## ● Connect the battery to the battery charger

The battery(7) must be charged before using it the first time. The battery is only 30% charged when delivered.

**NOTE!** Monitor the charging process while charging a battery. It is recommended to remove the battery from the battery charger when the battery is full charged, or the charger is disconnected from the power supply.

– Align the raised ribs of the battery pack with the mounting slots in the charger; slide the battery battery into the charger and engage the battery with the charger's electrical terminals.

– The charger will communicate with the battery pack to evaluate the condition of the battery pack.

– While the battery pack is charging, the charger's indication LED will shine as follows to indicate the charging process and levels:


The charger's indication LED light shines consistently red when the battery is charging.


The charger's indication LED light shines consistently green when the battery is fully charged.


The battery will not be charged if the battery temperature is deviation. In that case the charger's indication LED light shines consistently green until the battery cool down or heat to normal temperature.


The battery will never be charged if the battery is damaged. In that case the charger's indication LED light shines consistently green

– The four LEDs on the battery pack indicate the current charged power level. Press the battery's electric energy button to check the power level of the battery.

– When the battery is full charged, the battery charger will stop charging (switch to stand by).

– It is recommended to remove the battery from the battery charger when the battery is fully charged, or the charger is disconnected from the power supply.

– Pull out the plug. Never use the power supply cable to disconnect the charger from the wall socket.

## ● Maintenance

– Make sure the battery and battery charger are clean and that the terminals on the battery and the battery charger are always clean and dry before the battery is placed in the battery charger.

– Keep the battery guide tracks clean. Clean plastic parts with a clean and dry cloth.

## ● Transport and storage

– Store the equipment in a lockable area so that it is out of reach of children and unauthorized persons.

– Store the battery and the battery charger in a dry, moisture-free and frost-free space.

– Store the battery where the temperature is between 14 °F (-10 °C ) and 113 °F (45 °C) and never in direct sunlight.

– Store the battery charger only in an enclosed and dry space.

– Be sure to store the battery separate from the battery charger.

## ● Fault codes

| LED display | Possible faults | Possible action |
|---|---|---|
| Charger LED shines consistently green but battery electric energy LED light indicates no increase in charge. | The battery is ok, but temperature deviation. | Charge the battery in surroundings where temperatures are between 32°F (0 °C) and 104°F (40 °C). Wait for the battery cool down. |
| Charger LED shines consistently green but battery electric energy LED light indicates no increase in charge. | Battery is damaged. Charger is damaged. | Contact PRORUN Customer Service. |

# 9. ASSEMBLY INSTRUCTIONS

**ASSEMBLING THE BLOWER TUBE** (See Fig. 2-3)

ALWAYS REMOVE THE BATTERY PACK BEFORE ASSEMBLING THE BLOWER TUBE.

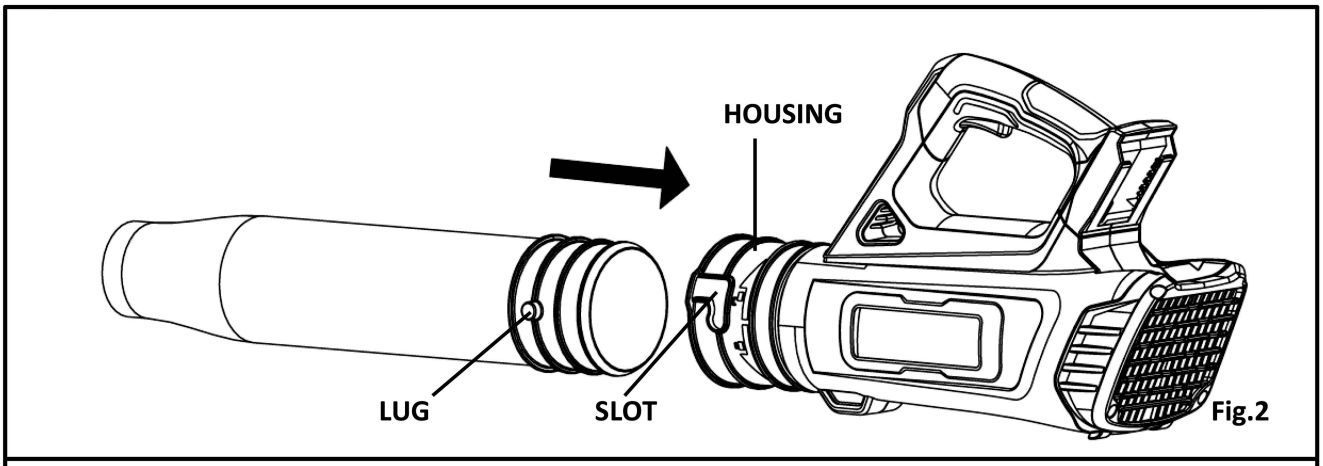


Fig.2

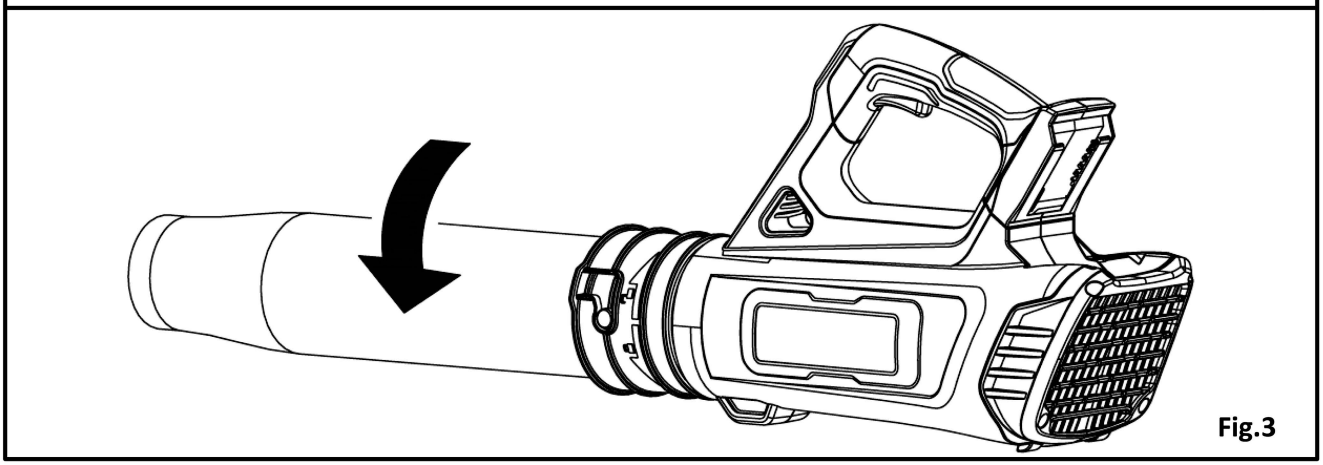

Fig.3

- Line up the Lug and the slot.
- Push the blower tube onto the housing.
- Rotate the blower tube anticlockwise.

# 10. OPERATIONS

**TO REMOVE OR INSTA LL BATT ERY PACK** (See Fig.4)

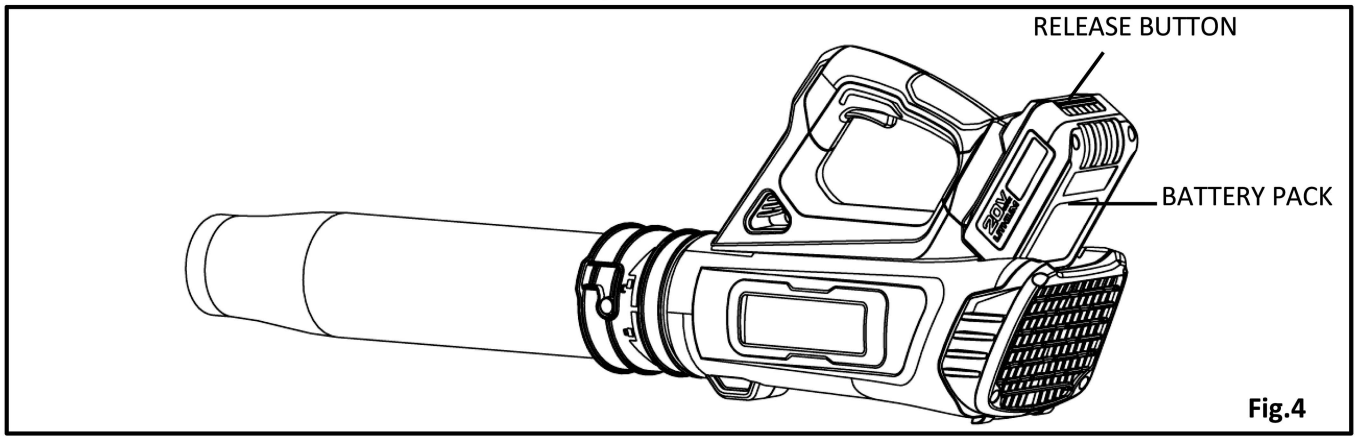


**Fig.4**

Depress the Battery Release Button to release battery pack from your tool. After recharging, insert the battery pack into tool's battery port. A simple push and slight pressure will be sufficient.(Fig.4)

**Switching the Blower On/Off** (See Fig.5)

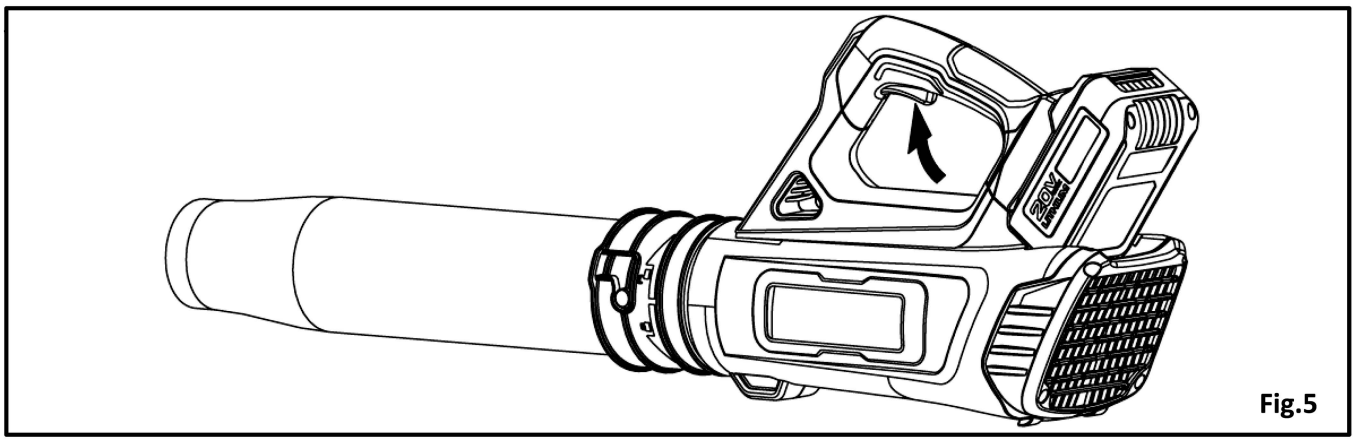


**Fig.5**

**Switching On**

• Hold the blower with one hand on the control handle - wrap your thumb around the handle.

Pull the trigger with your index finger and hold it there. The blower accelerates and air flows from the nozzle.

**Switching Off**

To switch off, release the variable speed trigger. No air flows from the nozzle.

### Using the Blower

Holding and Controlling the Blower

Hold and control the blower with one hand on the control handle - wrap your thumb around the handle.

Point the nozzle at the ground, walk slowly and steadily forwards.

# 11. ENVIRONMENTAL PROTECTION

Waste electrical products should not be disposed of with household waste. Please recycle where facilities exist. Check with your Local Authority or retailer for recycling advice.

# 12. MAINTENANCE

**WARNING**

To avoid risk of fire, electric shock, or electrocution:

• Do not use a damp cloth or detergent on the battery or battery charger.

• Always remove the battery pack before cleaning, inspecting, or performing any maintenance on the hedge trimmer.

**Cleaning**

1. Wipe the outside of the blower with a dry, soft cloth. Do not hose down or wash with water.
2. Brush or blow dust, debris, and grass clippings out of the air vents. Keep them free of obstruction.

**Battery Pack**

• Store the battery pack fully charged.

• Do not store the battery pack on the tool or in the charger.

• After charging, the battery pack may be stored in the charger, as long as the charger is not plugged in.

**Charger Maintenance**

• Keep the charger clean and clear of debris. Do not allow foreign material to get into the recessed cavity or onto the contacts. Wipe the charger clean with a dry cloth. Do not use solvents or water, and do not place the charger in wet conditions.

• Unplug the charger when there is no battery pack in it.

• Fully charge the batteries before placing them in storage.

• Store the charger at normal room temperature. Do not store it in excessive heat. Do not use the charger in direct sunlight. Recharge at room temperature between 41˚F and 104˚F (5˚C and 40˚C). If the battery pack is hot, allow it to cool down before recharging.

# 13. TROUBLESHOOTING

Troubleshooting the battery charger during charging.

**Battery charger**

| LED display | Possible faults | Possible action |
|---|---|---|
| Red LED flashing. | Temperature deviation | Use the battery charger only when the surrounding temperature is between 41°F (5°C) and 111°F (44°C) |
| Red LED lit. | | Contact your service agent. |

**Blower**

Troubleshooting the Blower during running.

| Condition | Possible faults | Possible action |
|---|---|---|
| **Blower runtime is too short** | **Battery not fully charged** | **Fully charge the battery.** |

# 14. EC DECLARATION

Here with we, Zhejiang Zhongjian Technology Co., Ltd.

No.10 Mingyuan South AVE, Economic Development Zone, Yongkang, Zhejiang 321300, China

declare that the following Appliance complies with the appropriate basic safety and health requirements of the EC Directives based on its design and type, as brought into circulation by us

This declaration relates exclusively to the machinery in the state in which it was placed on the market, and excludes components which are added and/or operations carried out subsequently by the final user.

| | |
|---|---|
| Category: | Cordless Blower |
| Model: | PBL120 |
| Serial number: | YYMM000001-999999 |
| Applicable EC Directives: | - Machinery Directive 2006/42/EC |

The following standard have been applied:

EN55014-1,EN55014-2,EN60745-1,EN60335-1,EN50636-2-100, EN 62233

Additional used EC Directives: - EMC Directive 2014/30/EU

-RoHS Directive 2011/65/EC

- Outdoor- Noise- Directive 2000/14/EC and 2005/88/EC

| | | |
|---|---|---|
| Measured sound power level | 84.3 | dB(A) |
| Guaranteed sound power level | 87 | dB(A) |

Conformity assessment method to Annex V/ Directive 2000/14/EC and 2005/88/EC

8.10.2016
Yongkang/Yanghaiyue
Chief Engineer

PRORUN regularly improves our products, and you may find slight difference between your machine and descriptions contained within this operator's manual. Modifications can be made to the machine without notice and without the obligation to update the manual, providing that the essential safety and functional characteristics remain unaltered. Contact PRORUN Customer Service with any questions and for current specifications.

PRORUN / TOPSUN USA
200 Overhill Drive, Suite A
Mooresville, NC 28117
Proruntech.com
info@proruntech.com
Phone: 1-844-905-0882




Zhejiang Zhongjian Technology Co., Ltd
Web: www.topsunpower.cc
E-mail: sales@topsunpower.cc
ADD: No.155 Mingyuan North AVE, Economic Development Zone,
Yongkang, Zhejiang, 321300, P.R.China
Made In China