Waterdrop

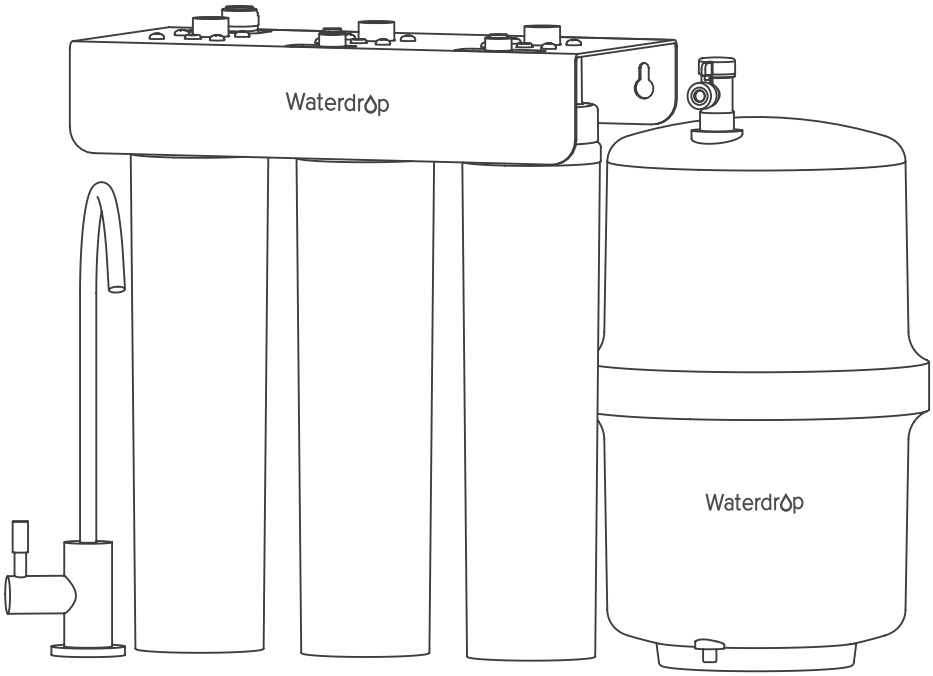

Waterdrop Reverse Osmosis System

User Manual

Model: WD-RT34T-WMA

Contents

Before Installation **1**
Inspect the Package 1
Required Tools 1
Specifications 1
Product Introduction 2
Installation Sample 3
Installation Tips 3
Installation Steps **5**
Step 1: Install the Feed Water Adapter (3/8" or 1/2") 5
Step 2: Install the Faucet 6
Step 3: Install the Drain Saddle 6
Step 4: Install the Filters 7
Step 5: Connect Tubing 8
Step 6: Start up the System 9
Filter Replacement Guide **10**
Filter Lifespan Checking 10
How to Replace Filters 10
How to Reset the Lifespan Timer 11
How to Flush the Filter after Replacement 11
System Maintenance **12**
Troubleshooting **13**
Limited Product Warranty **14**
Return & Repair **15**

Before Installation

Inspect the Package

Open the box and take out the main unit, all the components and connection fittings. Inspect them according to the parts list to ensure nothing is left out or damaged during shipping. If any parts are cracked or broken, please do not proceed with the installation and contact our customer service **+1-888-352-3558 (U.S.)** or send an email to **service@waterdropfilter.com** to identify and get familiar with all components for quick installation.

Required Tools

- Variable speed drill
- Utility knife or scissors
- Drill bit: 1/4" (for drainpipe), 1" (for faucet hole)
- Adjustable wrench, pliers
- Screwdriver
- Flashlight
- Towel

Specifications

To achieve the optimal performance, it is highly recommended to use the system within the operational parameters.

Product model	WD-RT34T-WMA
Machine size	12.60 " × 6.10 " × 14.69 "
Storage tank size	Ø7.95 " × 13.03 "
Maximum daily pure water production	220 GPD
Feed water pressure	43.5-87 psi/0.3-0.6 Mpa
Feed water temperature	41-100 °F/5-38 °C
Feed water source	Municipal tap water

NOTE:

- The daily production rate is measured under 58 psi dynamic feed water pressure and 77 °F water temperature.
- If you are using well water as the source, please ensure that the feed water has been through a pre-filtration system.

Product Introduction

1. Parts List



Main unit × 1



Tank valve × 1

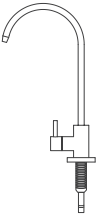

Faucet assembly × 1



NFC tag × 1

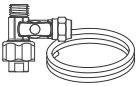

Feed water adapter 3/8"-1/2" × 1
and inlet water tubing × 60"
(pre-assembled)

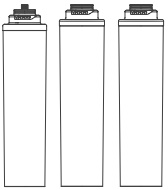

Filter × 3



Storage tank × 1



Yellow 1/4" PE tubing × 60"
(tank tubing)



Blue 1/4" PE tubing × 60"
(pure water tubing with
a quick-connect straight fitting)



Hole drilling sticker



Wood screw × 2
(for auxiliary fixation)

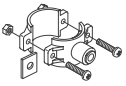

Drain saddle × 1



Red 1/4" PE tubing × 60"
(drain water tubing)



Assistant label × 1



Teflon tape × 2



Lock clips (larger clip × 2, smaller clip × 6)

2. System Introduction

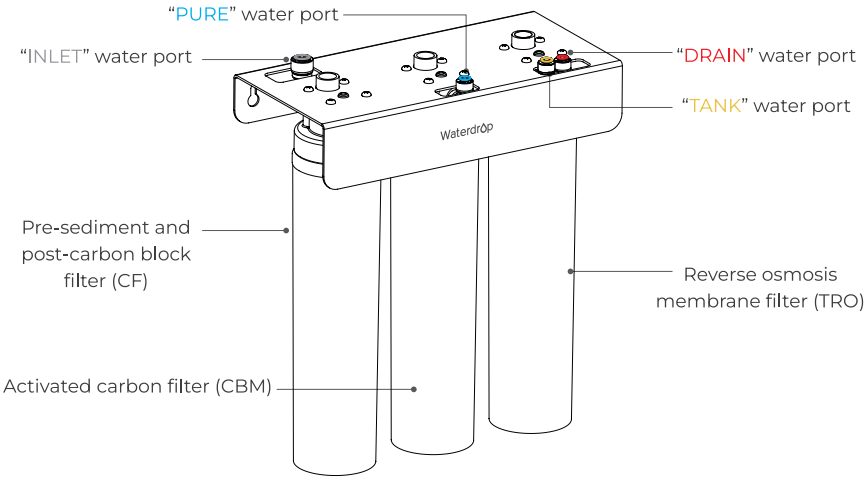

Installation Sample

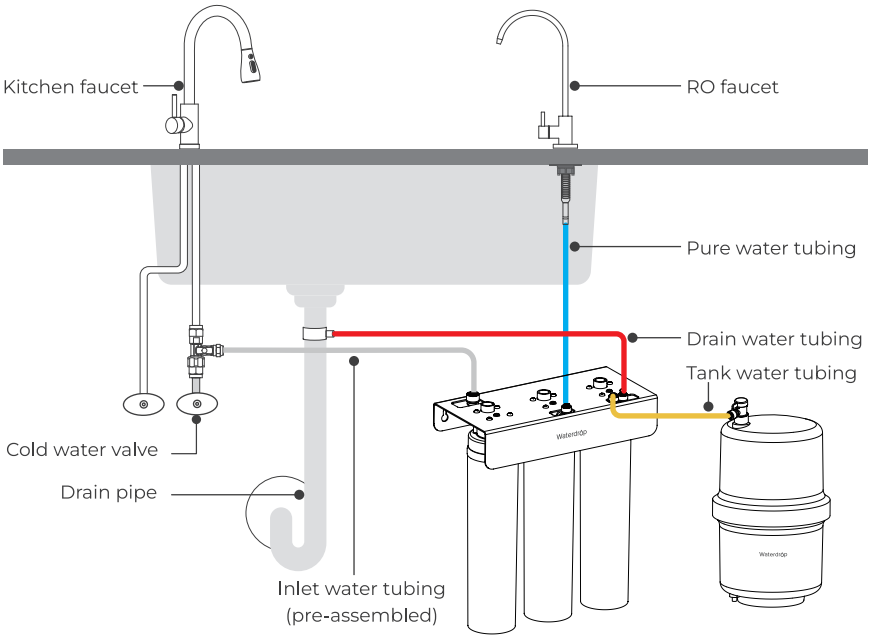

Installation Tips

1. How to Use the Quick-Connect Fittings

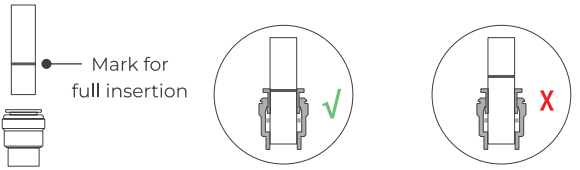

Figure 1

To connect:

· There is an existing mark **(Figure 1)** at the end of the tubing for you to confirm if the tubing is fully inserted into the fitting.

· Please push the tubing into the fitting until it reaches the mark on the tubing (about 0.8").

· Put the blue lock clip on the fitting. It will lock the tubing in place and prevent it from falling off.

NOTE:

· If the tubing is not fully inserted, no seal will be created and leakage will occur.

· If the tubing is too long, cut it to a suitable length with a sharp utility knife or scissors. Cut the tubing squarely and cleanly **(Figure 2)**.



Figure 2

To disconnect:

· Remove the blue lock clip from the fitting.

· Use your thumb and index finger to press down the lock sleeve. Use your other hand to pull out the tubing from the fitting **(Figure 3)**.

NOTE: Please do not pull out the tubing directly. This will damage the fitting and cause leakage.

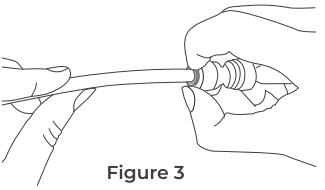

Figure 3

2. How to Drill a Hole into Your Sink or Countertop (Optional)

NOTE: Please confirm if there is an existing hole available to install the RO faucet. If not, please drill a hole in accordance with the following steps.

It is highly recommended to watch the YouTube video “How to Drill Faucet Holes” for a better understanding of the process. There is also a reference sticker to help you drill the hole. Remember to wear safety glasses to protect your eyes while drilling the faucet hole.

1. Choose a suitable place to install the faucet and leave enough space for the mounting washer to avoid touching the wall or sink. **(Figure 4)**.

2. Choose a diamond core bit for granite, and a carbide drill bit for stainless steel. Do not use a hammer drill on natural stone, glass or ceramic.

3. Glue the sticker on your sink or countertop, and then drill a hole the size of the sticker hole (1").

4. Make an indent with a center punch on a stainless-steel sink before drilling to help guide the bit.

5. Be careful when drilling on a porcelain sink, as it can be easily chipped. Apply downward pressure firmly on the bit until you break through the surface.

6. Starting at the lowest speed, and hold the drill straight with firm pressure to prevent the bit from walking on the counter.

7. Once you break through the surface, swirl the drill a little to apply pressure in a circle evenly.

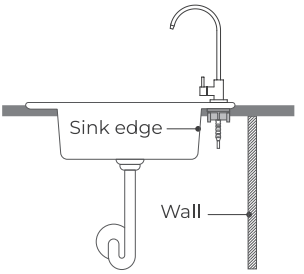

Figure 4

Installation Steps

NOTE: The RO system must be connected to the COLD water supply ONLY.

· Do not install the system in exposure to direct sunlight or harmful chemicals, nor any place where it may be damaged.

· Do not install the system near any heat source.

· Do not install the system outdoors.

· If the system is installed under the sink, do not hang it on the cabinet body.

· If the system need to be hung, please confirm the strength of the object to be hanged on it, select the appropriate screws, and install by professionals.

Step 1: Install the Feed Water Adapter (3/8" or 1/2")

NOTE: The "INPUT" water tubing has been attached to the feed water adapter for easy installation.

1. Shut off the water supply. Turn on the kitchen faucet to release the water pressure.

NOTE: Make sure the water has stopped flowing before moving on to the next step. Get a towel or bucket to catch any excess water.

2. Disconnect the cold water pipe from the cold water supply valve.

3. If the cold water pipe is 3/8", twist the converter onto the cold water supply valve (with its washer), then twist the feed water adapter onto the converter, and tighten with an adjustable wrench **(Figure 5)**.

NOTE: If the cold water pipe is 1/2", unscrew the converter, screw it to the feed water adapter, then twist the assembly onto the cold water supply valve (with its washer) **(Figure 6)**.

4. Twist the cold water pipe (with its washer) onto the feed water adapter and tighten with an adjustable wrench.

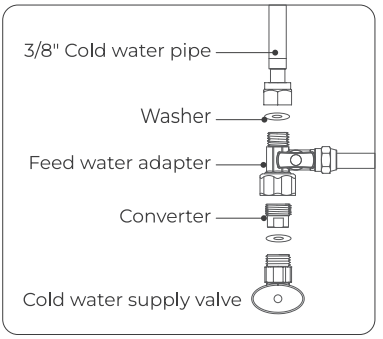

Figure 5

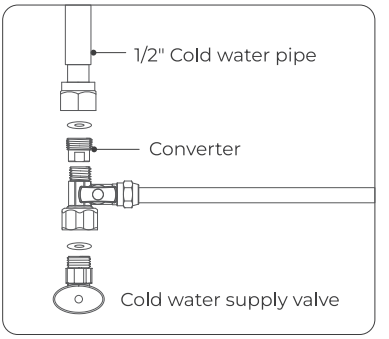

Figure 6

Step 2: Install the Faucet (Figure 7)

NOTE: If your kitchen sink or countertop does not have an existing hole, you will have to drill one (1"). (Refer to Page 4)

1. Insert the faucet stem into the hole on countertop.

2. Under the sink, slip on the mounting washer and tighten it up.

3. Push the quick-connect fitting on the pure water tubing upward onto the faucet's filtered water tubing, then insert the locking clip to secure it in place.

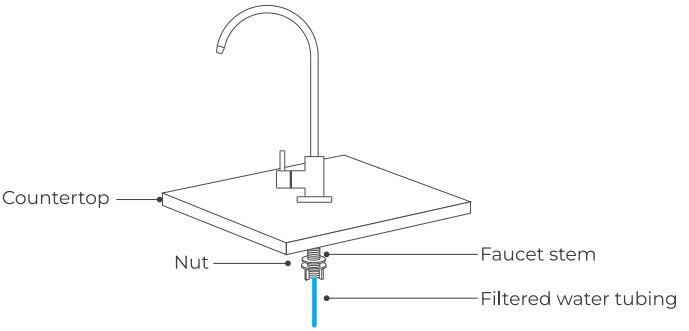

Figure 7

Step 3: Install the Drain Saddle

1. Stick the foam seal on the front plate of the drain saddle. Ensure that the hole of the foam seal is aligned with the hole of the front plate **(Figure 8)**.

2. Choose a spot on the drainpipe that is convenient for installing the drain saddle. Drill a 1/4" hole in the drainpipe. Be sure not to penetrate the opposite side of the pipe.

NOTE: It's recommended to install the drain saddle on the vertical drainpipe.

3. Slip the front plate over one end of the tubing (without a mark) and insert the tubing into the drilled hole for about 0.6" **(Figure 9)**.

4. Position the back plate on the drainpipe by tightening the screws and nuts evenly while leaving the tubing in the hole.

5. Pop the lock clip onto the fitting to secure the connection **(Figure 10)**.

NOTE: In some areas, the drain tubing must be connected to the drainpipe through the air gap. Consumers must purchase air gap accessories separately.

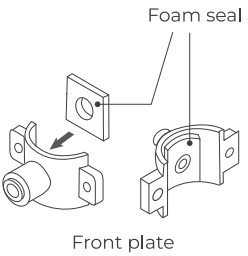

Figure 8

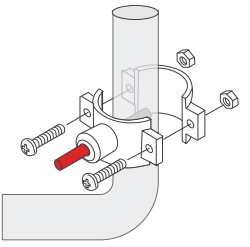

Figure 9

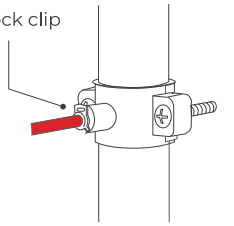

Figure 10

Step 4: Install the Filters

NOTE: Ensure correct positioning of each filter cartridge. Incorrect placement will cause system failure and component damage.

1. Remove the plastic protective film before installing the filter.

2. Take the filter corresponding to the position, insert it into the filter connector from bottom to top, and turn it counterclockwise to lock. **(Figure 11)**

3. Install all the filters in sequence.

4. The system measures **12.60" ×6.10" ×14.69"**, and the storage tank measures Ø**7.95" ×13.03**". Ensure there is sufficient space beneath the countertop to install the system **(Figure 12)**.

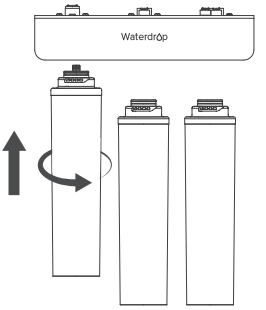

Figure 11

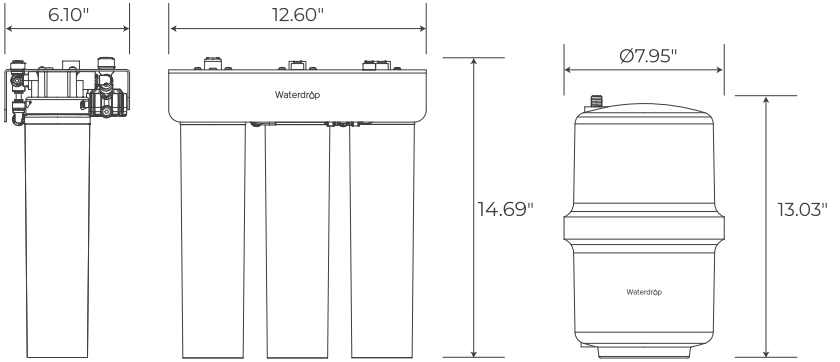

Figure 12

Step 5: Connect Tubing

NOTE: Confirm the tubing length you need first, and then cut the tubing if it's too long, referring to "How to Use the Quick-Connect Fittings" on page 3.

Before connecting the PE tubing to the system, remove the plugs from corresponding water ports **(Figure 13)**.

Connect Tubing Step (Figure 14)

1. Insert "INLET" water tubing (**white tubing**) into the "INLET" water port .

2. Insert "PURE" water tubing (**blue tubing**) into "PURE" water port.

3. Insert "DRAIN" water tubing (**red tubing**) into "DRAIN" water port.

4. Screw the tank valve onto the water outlet at the top of the storage tank and tighten it securely.

5. Insert one end of the "TANK" water tubing (**yellow tubing**) into the "TANK" water port, and insert the other end into the tank valve port.

NOTE: Make sure it is fully inserted until you reach the mark on the tubing and pop up the lock clips on every water port to avoid leaking water **(Figure 15)**.

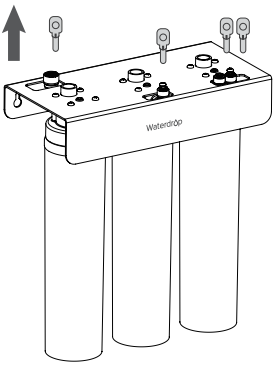

Figure 13

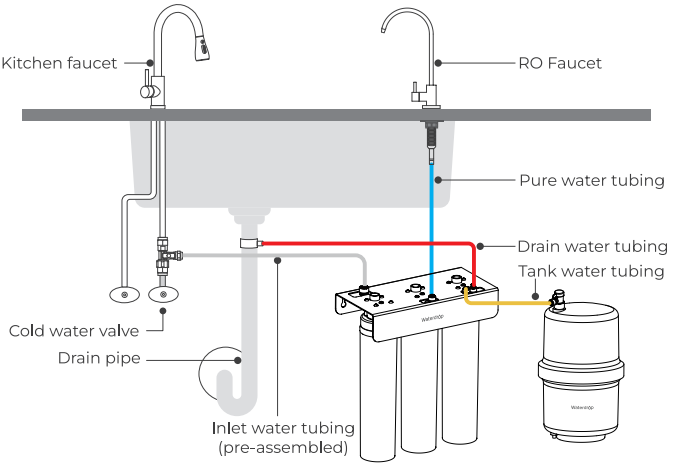

Figure 14

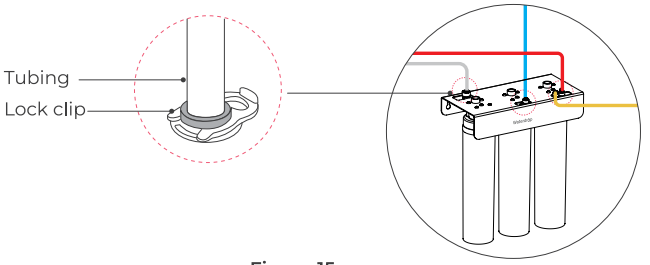

Figure 15

Step 6: Start up the System

1. Open the cold water valve and carefully check whether there is water leakage at the joints connecting the tee.
2. Open the tank valve and the RO faucet. Flush the system for 10 minutes. It's normal for no water to flow from the faucet during the first 2-3 minutes.
3. Close the RO faucet and wait 10 minutes. Then, open the RO faucet and run the water for about 3 minutes until the flow slows. Repeat this process once. Now, the flushing process is complete.

Filter Replacement Guide

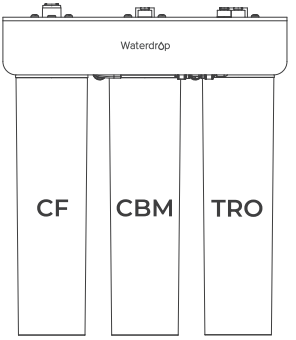

CF: Pre-filter
Filter lifespan: up to 6 months

CBM: Post-filter
Filter lifespan: up to 12 months

TRO: Reverse Osmosis Membrane Filter
Filter lifespan: up to 24 months

Filter Lifespan Checking

NOTE: Filter lifespan may vary depending on source water quality and water usage. Please replace the filter in time. For your convenience, we have included an NFC tag in the accessories section. You can attach it wherever it's most convenient. Tap the NFC tag or scan the QR code to set the filter lifespan record **(Figure 17).**
NOTE: Do not attach it to metal surfaces, as this may prevent the NFC function from working properly.

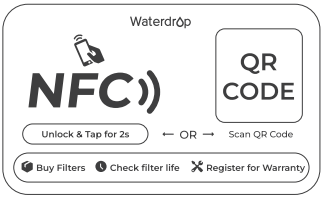

Figure 17

How to Replace Filters (Take the CF filter as an example) (Figure 18)

If the filter expires, please purchase and replace the filter immediately. Otherwise, the filtration efficiency will decrease significantly and affect the performance.
1. Close the cold water valve.
2. Twist off the filter.
NOTE: After removing the old filter, it is recommended to immediately pour out the remaining water in the old filter to prevent water from spilling.
3. Install the new filter in the correct position. Open the cold water valve.

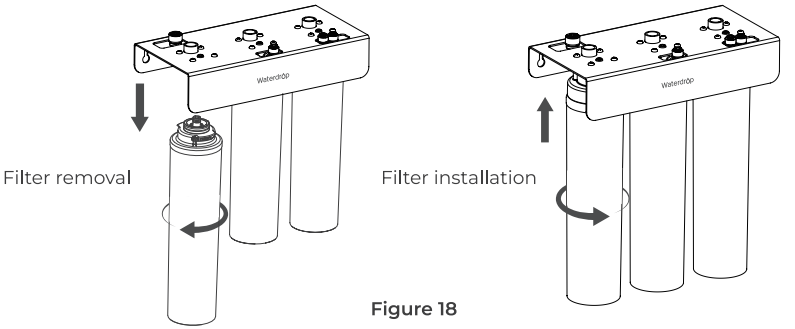

Figure 18

How to Reset the Lifespan Time

Enable NFC on your phone and tap it against the NFC tag, or scan the QR code. Open the link and follow the on-screen instructions to reset the filter lifespan time **(Figure 19)**.

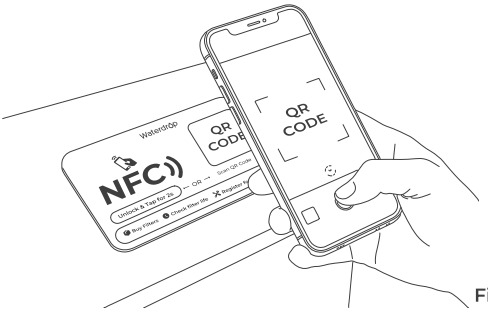

Figure 19

How to Flush the Filter after Replacement

For the CF Filter:

After replacement, open the RO faucet and flush the system for 15 minutes.

For the RO Filter:

After replacement, open the RO faucet and flush the system for 30 minutes.

For the CBM Filter:

After replacement, open the RO faucet until the water flow noticeably slows down. Close the faucet and wait for 15 minutes. Then open the RO faucet again until the water flow significantly decreases once more. At this point, the flushing process is complete.

System Maintenance

• If you don't use the system for more than one week, turn on the faucet, shut off the cold water supply valve. Seal the filters and store them in the refrigerator (not the freezer). You need to open the faucet and allow it to run for 10 minutes first before using the system again. Otherwise, you need to replace the filters, as bacteria may grow when the system is not used for a long time.

• Please replace the filter regularly.

NOTE: While the testing was performed under standard laboratory conditions, actual performance may vary depending on the source water quality and water usage. In case of premature blockage and failure of the filters, it's recommended to replace the filter in accordance with the actual usage.

Clean the system with clear water. Do not spray the water directly. Do not use steel wool, abrasive cleaners or corrosive liquids such as gasoline or acetone.

When cleaning, do not pour other liquids into the filter to avoid damage to the filter system.

• Keep the waste water pipe unobstructed to avoid damage to the filter or internal components. When the drain pipe is blocked, do not use the system to avoid waste water from soaking the floor.

• Check the system and water pipe fittings regularly for water leakage to avoid any property damage.

• If you are using well water as the source, please ensure that the feed water has been through a pre-filtration system. Otherwise, large particles in the well water will easily clog the filter and shorten the filter life.

Troubleshooting

• No Output Water from Faucet

a. Filter expired. Check filter life to confirm which filter needs to be replaced and replace it immediately.

b. Low water pressure. Check and confirm the water pressure is between 43.5 psi and 87 psi.

c. Water supply is off. Turn on the feed water adapter or water supply valve.

d. Incorrect filter installation. Re-install the three filters, and make sure they are fitted properly.

e. A tubing is crimped. Check all tubing and remove any crimps.

• Low Water Flow at the Faucet

a. Leak from tubing connection. Check and ensure all tubing is installed correctly and completely.

b. Filter expired. Check the filter lifespan to confirm which filter needs to be replaced and replace it immediately.

c. Low water temperature. Be sure to use the system at a temperature of 41-100°F.

d. Use well water as the source and the feed water has not been through a pre-filtration system, the filter has been clogged. If you are using well water as the source, please ensure that the feed water has been through a pre-filtration system. Otherwise, large particles in the well water will easily clog the filter and shorten the filter life.

e. Ensure the valve on the storage tank is open.

• Water Leakage

a. Check all joints, fittings and tubing connections to locate the leakage. Make sure the filters are well installed.

b. Turn off the feed water adapter, and please contact the customer service hotline +1-888-352-3558 or send an email to service@waterdropfilter.com for assistance.

• Filtered Water from the Faucet Tastes Like Tap Water

a. The filters are not well-installed. Make sure the filters are placed properly.

b. Filter expires. Check the filter lifespan to confirm which filter needs to be replaced and replace immediately.

Limited Product Warranty

At Waterdrop, we are proud to offer our customers a wide array of high-quality products, including reverse osmosis systems. We offer a 30-day money-back return guarantee, a 1-year manufacturer warranty, and lifetime tech support for all our products from the date the product is received. During the warranty period, we will replace or repair any part deemed defective, as long as the product has not been subjected to tampering, alteration, lack of regular maintenance or improper use after delivery. The cost of repair or replacement under those excluded circumstances shall be borne by the consumer.

Conditions of Validity of this Limited Product Warranty

THIS LIMITED PRODUCT WARRANTY SHALL ONLY BE VALID IF:

1. The feed water pressure is no less than 43.5 psi and no higher than 87 psi.
2. The feed water temperature must be no less than 41 °F and no more than 100°F.
3. The feed water must have a pH between 6.5 and 8.5.
4. Turbidity must be less than 1.0 NTU.
5. The feed water must be municipal tap water. If you are using well water as the source, please ensure that the feed water has been through a pre-filtration system.
6. The Total Dissolved Solids (TDS) must be less than 750 ppm.
7. The max hardness must be less than 7 grains per gallon.

Any information or suggestion with respect to our product concerning applications, specifications or standards is provided solely for your convenient reference. The quality of water supplies may vary seasonally or over a period of time. Your water usage may vary as well. The manufacturer assumes no liability for the determination of the proper equipment necessary to meet your requirements, and we do not authorize others to assume such obligation on our behalf. You must verify and test the suitability of any information with respect to the product for your specific application.

Conditions that render this Limited Product Warranty void:

THIS LIMITED PRODUCT WARRANTY SHALL NOT BE VALID IF:

1. The product is purchased from someone other than our official website or our authorized dealers, as we cannot verify or guarantee the integrity or authenticity of the Product.
2. Improper storage, installation, maintenance, handling, use and/or alterations of the Product, including, but not limited to, non-compliance with the installation, maintenance and standard operation conditions stated in the Manual and this Limited Product Warranty.
3. Unreasonable use, unintended use, or misuse of the product for something other than its intended purpose as a reverse osmosis system.
4. Use of replacement parts, filters, membranes or other accessories that are not sold or manufactured by Waterdrop for use with this particular product.
5. Damage not resulting from manufacturing defects that occur while the product is in the original purchaser's possession.
6. Installation of the product with known or visible manufacturing defects at the time of installation.
7. Damage caused by freezing, flood, fire or Act of God.

Our sole obligation under this warranty shall be repair or replacement of a non-conforming product or parts of this product, or at our option, return of the product and a refund of the purchase price. Our obligation does not include the cost of transportation. We are not responsible for damage in transit, and claims for such damage should be presented to the carrier by the customer.

The warranties set forth herein are the only warranties made by us with respect to the product. We make no warranties, expressed or implied, including, but not limited to, any warranties of fitness or merchantability, except as expressly set forth above.

NOTE: In case some states do not allow limitations on how long an implied warranty lasts, you may choose to return the system. If you choose to keep it, you agree that the above limitations still apply to you.

Return & Repair

We accept returns within the return window if you are not satisfied with your product. In order to fulfill the warranty requirement, please contact us by phone at 1-888-352-3558, by email at service@waterdropfilter.com providing your name, order number, phone number, a description of the product involved and an explanation of the defect, and we will be more than happy to assist you.

⚠ **WARNING:** Cancer and Reproductive Harm-www.P65Warnings.ca.gov.

Waterdrop

Qingdao Ecopure Filter Co., Ltd.

Tel: 1-888-352-3558 (U.S.)
E-mail: service@waterdropfilter.com
Add.: No.13, Yishengbai Road, Jimo, Qingdao, China