Installation Manual

Installation and Appliance Setup

***CAUTION! Risk of Fire! DO NOT** store instruction manuals inside fireplace cavity. High temperatures could cause a fire.*

INSTALLER: Leave this manual with the appliance, not inside the appliance.
CONSUMER: Retain this manual for future reference. Do not store inside the appliance.

***NOTICE: DO NOT** discard this manual!*

MARQUIS SERIES

GAS-FIRED

Models:

MARQ36IN-B, MARQ42IN-B

C UL US LISTED

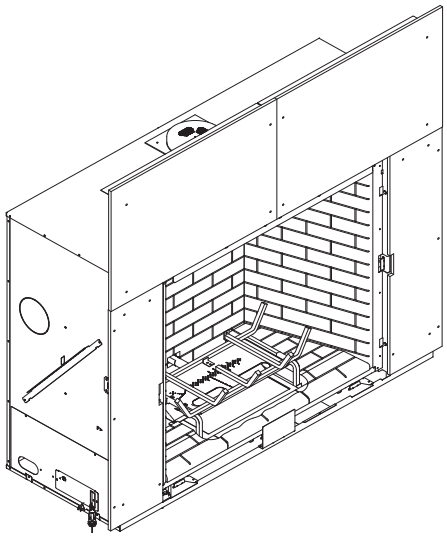

⚠ WARNING:
FIRE OR EXPLOSION HAZARD
Failure to follow safety warnings exactly could result in serious injury, death, or property damage.

- **DO NOT** store or use gasoline or other flammable vapors and liquids in the vicinity of this or any other appliance.
- **What to do if you smell gas**
  - **DO NOT** try to light any appliance.
  - **DO NOT** touch any electrical switch. **DO NOT** use any phone in your building.
  - Leave the building immediately.
  - Immediately call your gas supplier from a neighbor's phone. Follow the gas supplier's instructions.
  - If you cannot reach your gas supplier, call the fire department.
- Installation and service must be performed by a qualified installer, service agency, or the gas supplier.

This appliance may be installed as an OEM installation in manufactured home (USA only) or mobile home and must be installed in accordance with the manufacturer's instructions and the *Manufactured Home Construction and Safety Standard, Title 24 CFR, Part 3280* in the United States, or the *Standard for Installation in Mobile Homes, CAN/CSA Z240 MH Series,* in Canada.

This appliance is only for use with the type(s) of gas indicated on the rating plate. This appliance is not convertible for use with other gases, unless a certified kit is used.

Pour demander un exemplaire en français de ce manuel d'installation, visitez www.majesticproducts.com.

⚠ DANGER

HOT GLASS WILL CAUSE BURNS.

DO NOT TOUCH GLASS UNTIL COOLED.

NEVER ALLOW CHILDREN TO TOUCH GLASS.

A barrier designed to reduce the risk of burns from the hot viewing glass is provided with this appliance and must be installed for the protection of children and other at-risk individuals.

Decorative barrier front provided with this appliance.

⚠ Safety Alert Key:

- ***DANGER!*** *Indicates a hazardous situation which, if not avoided will result in death or serious injury.*
- ***WARNING!*** *Indicates a hazardous situation which, if not avoided could result in death or serious injury.*
- ***CAUTION!*** *Indicates a hazardous situation which, if not avoided, could result in minor or moderate injury.*
- ***NOTICE:*** *Used to address practices not related to personal injury.*

Note: *The term "recommend" or "recommended" does not indicate a requirement. It is a best practice suggested by Hearth & Home Technologies®.*

Table of Contents

Installation Standard Work Checklist 3

1 Product Specific and Important Safety Information

A. Appliance Certification 4
B. Glass Specifications 4
C. BTU Specifications 4
D. High Altitude Installations 4
E. Non-Combustible Materials Specification 4
F. Combustible Materials Specification 4
G. Electrical Codes 4
H. California 4
I. Requirements for the Commonwealth of Massachusetts . . 5

2 Getting Started

A. Design and Installation Considerations 6
B. Good Faith Wall Surface 6
C. Tools and Supplies Needed 6
D. Inspect Appliance and Components 7

3 Framing and Clearances

A. Appliance/Decorative Barrier Front Dimension Diagrams . 8
➔ B. Clearances to Combustibles 11
C. Constructing the Appliance Chase 13
D. Hearth Extension 15
E. Floor Protection 16

4 Termination Location and Vent Information

A. Approved Pipe 17
B. Vent Termination Minimum Clearances 17
C. Vent Terminal Clearances 18
E. Use of Elbows 19
F. Measuring Standards 20
G. Vent Diagrams 21
H. PVLP-SLP, PVI-SLP-B and PVV-SLP Information 27

5 Vent Clearances and Framing

A. Pipe Clearances to Combustibles 28
B. Wall Penetration Framing/Firestops 28
C. Ceiling Firestop/Floor Penetration Framing 29
D. Install Attic Insulation Shield 29
E. Installing the Optional Heat Management 30

6 Appliance Preparation

A. Vent Collar Preparation 31
B. Securing and Leveling the Appliance 32
C. Installing Non-Combustible Facing Material 33

7 Venting and Chimneys

A. Assemble Vent Sections (DVP Pipe Only) 34
B. Assemble Slip Sections 35
C. Secure the Vent Sections 36
D. Disassemble Vent Sections 36
E. Vertical Termination Requirements 37
F. Horizontal Termination Requirements 38

8 Electrical Information

A. General Information 40
B. Wiring Requirements 42

9 Gas Information

A. Fuel Conversion 44
B. Gas Pressure 44
C. Gas Connection 44
D. High Altitude Installations 44
E. Air Shutter Setting 45

10 Finishing

A. Facing Material 46
B. Finishing Templates 47
C. Mantel and Wall Projections 49
D. Decorative Barrier Front Dimensions for Finishing 51

11 Appliance Setup

A. Fixed Glass Assembly 52
B. Remove the Shipping Materials 54
C. Clean the Appliance 54
D. Refractory 54
E. Lava Rock Placement 54
F. Glowing Ember Placement 54
G. Teco-Sil Placement 55
H. Log Set Assembly 56
I. IntelliFire Touch Control System Setup 64
J. LED's 64
K. Install Decorative Barrier Front 64

12 Reference Materials

A. Vent Components Diagrams 65
B. Accessories 71

➔ = Contains updated information.

Installation Standard Work Checklist

ATTENTION INSTALLER:
Follow this Standard Work Checklist

This standard work checklist is to be used by the installer in conjunction with, not instead of, the instructions contained in this installation manual.

Customer: _____
Lot/Address: _____
_____

Model (circle one): MARQ36IN-B, MARQ42IN-B

Date Installed: _____
Location of Fireplace: _____
Installer: _____
Dealer/Distributor Phone # _____
Serial #: _____

WARNING! Risk of Fire or Explosion! *Failure to install appliance according to these instructions can lead to a fire or explosion. Install ONLY components and accessories approved by Hearth & HOme Technologies. Unapproved components and accessories could cause fireplace to overheat.*

Appliance Install Information	**YES**	**IF NO, WHY?**
Verified clearances to combustibles requirements are maintained. (Pg. 11-12)	☐	_____
Verified that the chase is insulated and sealed. (Pg. 13)	☐	_____
Verified mantel and wall clearance requirements are maintained. (Pg. 49-50)	☐	_____
Verified hearth extension requirements are maintained. (Pg. 15-16)	☐	_____
Verified appliance is leveled and secured. (Pg. 32)	☐	_____
Verified required factory-supplied non-combustible board installed. (Pg. 33)	☐	_____
Venting/Chimney Section 7 (Pg. 34-39)		
Verified venting configuration complies to vent diagrams.	☐	_____
Verified venting installed, locked and sealed/secured in place.	☐	_____
Verified venting meets clearance to combustible requirements.	☐	_____
Verified wall/ceiling firestops are installed (if applicable).	☐	_____
Verified attic insulation shield is installed (if applicable).	☐	_____
Verified Exterior wall/Roof flashing is installed and sealed.	☐	_____
Verified termination cap is installed and sealed.	☐	_____
Electrical Section 8 (Pg. 40-43)		
Verified unswitched power (110-120 VAC) provided to the appliance.	☐	_____
Verified wall switch wires are properly installed (if applicable).	☐	_____
Gas Section 9 (Pg. 44-45)		
Verified appliance is using proper fuel type.	☐	_____
If converted, verified proper fuel conversion kit was used.	☐	_____
Verified that gas components (fittings, pressure taps, etc) are leak free and fireplace is operating under correct pressures.	☐	_____
Finishing Section 10 (Pg. 46-51)		
Verified that finish material does not interfere with install/operation of decorative barrier front	☐	_____
Verified combustible materials are not installed in non-combustible areas.	☐	_____
Verified all clearances meet installation manual requirements.	☐	_____
Verified mantels/wall projections comply with installation manual requirements.	☐	_____
Appliance Setup Section 11 (Pg. 55-64)		
Verified all packaging and protective materials are removed (inside & outside of appliance).	☐	_____
Verified Teco-Sil installed and properly fogged with black high temperature paint.	☐	_____
Verified Lava Rock, Mystic Embers, Glowing Embers, and logs installed correctly.	☐	_____
Verified fixed glass assembly installed and secured.	☐	_____
Verified that a required decorative door option is installed properly.	☐	_____
Verified remote control has been programmed and is fully functional.	☐	_____
Verified proper air shutter setting for installation type and vent configuration.	☐	_____
Manual bag and all of its contents are removed from inside/under the appliance and given to party responsible for use and operation.	☐	_____

Hearth & Home Technologies recommends the following:

- Photographing the installation and copying this checklist for your file.
- That this checklist remain visible at all times on the appliance until the installation is complete.

Comments: Further description of the issues, who is responsible (Installer/ Builder/ Other Trades, etc) and corrective action needed _____

Comments Communicated to party responsible _____ by _____ on _____
(Builder / Gen. Contractor/) (Installer) (Date)

➔ = Contains updated information.

2614-982B 11/21

1 Product Specific and Important Safety Information

A. Appliance Certification

MODELS: **MARQ36IN-B, MARQ42IN-B**
LABORATORY: **Underwriters Laboratories, Inc. (UL)**
TYPE: **Direct Vent Heater**
STANDARD: **ANSI Z21.88-2019 • CSA 2.33-2019**

This product is listed to ANSI standards for "Vented Gas Fireplace Heaters" and applicable sections of "Gas Burning Heating Appliances for Manufactured Homes and Recreational Vehicles", and "Gas Fired Appliances for Use at High Altitudes".

NOTICE: *This installation must conform with local codes. In the absence of local codes you must comply with the National Fuel Gas Code, ANSI Z223.1-latest edition in the U.S.A. and the CAN/CGA B149 Installation Codes in Canada.*

NOT INTENDED FOR USE AS A PRIMARY HEAT SOURCE. This appliance is tested and approved as either supplemental room heat or as a decorative appliance. It should not be factored as primary heat in residential heating calculations.

B. Glass Specifications

This appliance is equipped with ceramic glass with an anti-reflective coating. Replace glass only with ceramic glass. Please contact your dealer for replacement glass.

C. BTU Specifications

Models *(U.S. or Canada)*		Maximum Input BTU/h	Minimum Input BTU/h	Orifice Size (DMS)
MARQ36IN-B (NG)	*(0-2000 FT)*	44,000	25,000	#30
MARQ36IN-B (Propane)	*(0-2000 FT)*	43,500	24,000	#47
MARQ42IN-B (NG)	*(0-2000 FT)*	54,500	30,000	#26
MARQ42IN-B (Propane)	*(0-2000 FT)*	47,500	23,500	#45

D. High Altitude Installations

NOTICE: *If the heating value of the gas has been reduced, these rules do not apply. Check with your local gas utility or authorities having jurisdiction.*

When installing above 2000 feet elevation:

- In the USA: Reduce input rate 4% for each 1000 feet above 2000 feet.
- In CANADA: Input ratings are certified without a reduction of input rate for elevations up to 4500 feet (1370 m) above sea level. Please consult provincial and/or local authorities having jurisdiction for installations at elevations above 4500 feet (1370 m).

Check with your local gas utility to determine proper orifice size.

E. Non-Combustible Materials Specification

Material which will not ignite and burn. Such materials are those consisting entirely of steel, iron, brick, tile, concrete, slate, glass or plasters, or any combination thereof.

Materials that are reported as passing **ASTM E 136, Standard Test Method for Behavior of Materials in a Vertical Tube Furnace at 750 ºC** shall be considered non-combustible materials.

F. Combustible Materials Specification

Materials made of or surfaced with wood, compressed paper, plant fibers, plastics, or other material that can ignite and burn, whether flame proofed or not, or plastered or unplastered shall be considered combustible materials.

G. Electrical Codes

NOTICE: *This appliance must be electrically wired and grounded in accordance with local codes or, in the absence of local codes, with* **National Electric Code ANSI/NFPA 70-latest edition** *or the* **Canadian Electric Code CSA C22.1.**

- A 110-120 VAC circuit for this product must be protected with ground-fault circuit-interrupter protection, in compliance with the applicable electrical codes, when it is installed in locations such as in bathrooms or near sinks.

H. California

WARNING: This product and the fuels used to operate this product (liquid propane or natural gas), and the products of combustion of such fuels, can expose you to chemicals including benzene, which is known to the State of California to cause cancer and reproductive harm. For more information go to: www.P65Warnings.ca.gov.

Note: The following requirements reference various Massachusetts and national codes not contained in this document.

I. Requirements for the Commonwealth of Massachusetts

For all side wall horizontally vented gas fueled equipment installed in every dwelling, building or structure used in whole or in part for residential purposes, including those owned or operated by the Commonwealth and where the side wall exhaust vent termination is less than seven (7) feet above finished grade in the area of the venting, including but not limited to decks and porches, the following requirements shall be satisfied:

Installation of Carbon Monoxide Detectors

At the time of installation of the side wall horizontal vented gas fueled equipment, the installing plumber or gas fitter shall observe that a hard wired carbon monoxide detector with an alarm and battery back-up is installed on the floor level where the gas equipment is to be installed. In addition, the installing plumber or gas fitter shall observe that a battery operated or hard wired carbon monoxide detector with an alarm is installed on each additional level of the dwelling, building or structure served by the side wall horizontal vented gas fueled equipment. It shall be the responsibility of the property owner to secure the services of qualified licensed professionals for the installation of hard wired carbon monoxide detectors.

In the event that the side wall horizontally vented gas fueled equipment is installed in a crawl space or an attic, the hard wired carbon monoxide detector with alarm and battery back-up may be installed on the next adjacent floor level.
In the event that the requirements of this subdivision can not be met at the time of completion of installation, the owner shall have a period of thirty (30) days to comply with the above requirements; provided, however, that during said thirty (30) day period, a battery operated carbon monoxide detector with an alarm shall be installed.

Approved Carbon Monoxide Detectors

Each carbon monoxide detector as required in accordance with the above provisions shall comply with NFPA 720 and be ANSI/UL 2034 listed and IAS certified.

Signage

A metal or plastic identification plate shall be permanently mounted to the exterior of the building at a minimum height of eight (8) feet above grade directly in line with the exhaust vent terminal for the horizontally vented gas fueled heating appliance or equipment. The sign shall read, in print size no less than one-half (1/2) in. in size, **"GAS VENT DIRECTLY BELOW. KEEP CLEAR OF ALL OBSTRUCTIONS".**

Inspection

The state or local gas inspector of the side wall horizontally vented gas fueled equipment shall not approve the installation unless, upon inspection, the inspector observes carbon monoxide detectors and signage installed in accordance with the provisions of 248 CMR 5.08(2)(a)1 through 4.

Exemptions

The following equipment is exempt from 248 CMR 5.08(2)(a)1 through 4:

- The equipment listed in Chapter 10 entitled "Equipment Not Required To Be Vented" in the most current edition of NFPA 54 as adopted by the Board; and
- Product Approved side wall horizontally vented gas fueled equipment installed in a room or structure separate from the dwelling, building or structure used in whole or in part for residential purposes.

MANUFACTURER REQUIREMENTS

Gas Equipment Venting System Provided

When the manufacturer of Product Approved side wall horizontally vented gas equipment provides a venting system design or venting system components with the equipment, the instructions provided by the manufacturer for installation of the equipment and the venting system shall include:

- Detailed instructions for the installation of the venting system design or the venting system components; and
- A complete parts list for the venting system design or venting system.

Gas Equipment Venting System NOT Provided

When the manufacturer of a Product Approved side wall horizontally vented gas fueled equipment does not provide the parts for venting the flue gases, but identifies "special venting systems", the following requirements shall be satisfied by the manufacturer:

- The referenced "special venting system" instructions shall be included with the appliance or equipment installation instructions; and
- The "special venting systems" shall be Product Approved by the Board, and the instructions for that system shall include a parts list and detailed installation instructions.

A copy of all installation instructions for all Product Approved side wall horizontally vented gas fueled equipment, all venting instructions, all parts lists for venting instructions, and/or all venting design instructions shall remain with the appliance or equipment at the completion of the installation.

See Gas Connection section for additional Commonwealth of Massachusetts requirements.

2 Getting Started

A. Design and Installation Considerations

WARNING! Risk of Fire or Explosion! *Read all instructions before starting the installation.*

Direct vent gas appliances are designed to operate with all combustion air siphoned from outside of the building and all exhaust gases expelled to the outside. No additional outside air source is required.

Installation MUST comply with local, regional, state and national codes and regulations. Consult insurance carrier, local building inspector, fire officials or authorities having jurisdiction over restrictions, installation inspection and permits.

Before installing, determine the following:

- Where the appliance is to be installed.
- The vent system configuration to be used.
- Gas supply piping requirements.
- Provisions for optional heat management system.
- Electrical wiring requirements.
- Framing and finishing details.
- Whether optional accessories—devices such as a fan, wall switch, or remote control—are desired.

Installation and service of this appliance should be performed by qualified personnel. Hearth & Home Technologies recommends HHT Factory Trained or NFI certified professionals.

hearthED FACTORY TRAINING Fuel Your Fire

NFI NATIONAL FIREPLACE INSTITUTE® A CERTIFICATION AGENCY

Improper installation, adjustment, alteration, service or maintenance can cause injury or property damage. For assistance or additional information, consult a qualified service technician, service agency or your dealer.

B. Good Faith Wall Surface

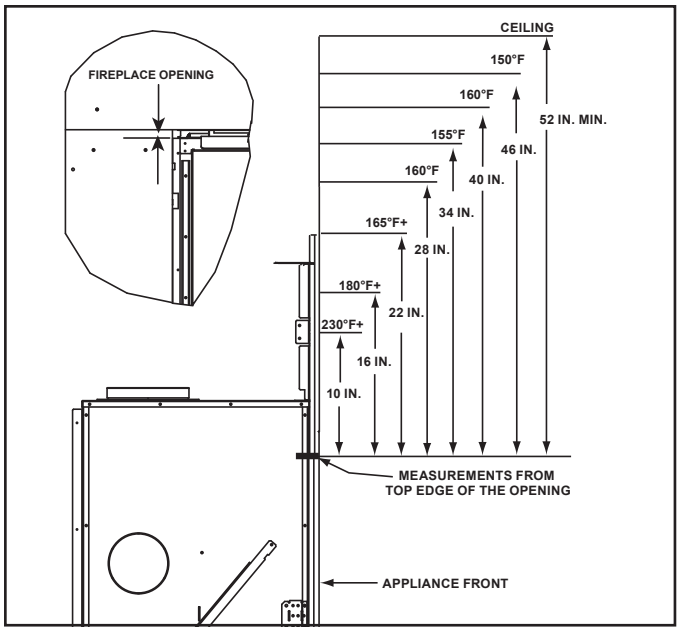

Figure 2.1 Good Faith Wall Surface Temperatures Above Appliance

If installing a television (TV) above the appliance, see Section 3 of the appliance Owner's Manual.

NOTICE: *Surface temperatures listed above are taken with a temperature measuring probe as prescribed by the test standard used for appliance certification. Temperatures on walls or mantels taken with an infrared thermometer may yield increased temperatures of up to 30 °F (17 °C) or more depending on the thermometer settings and material characteristics being measured. Use appropriate finishing materials that are able to withstand these conditions. For additional finishing guidelines, see Section 10.*

C. Tools and Supplies Needed

Before beginning the installation be sure that the following tools and building supplies are available.

Hand Tools	Tape measure
Level	Framing material
Manometer	Framing square
Voltmeter	Electric drill and bits (1/4 in.)
Plumb line	Safety glasses/Gloves
Wrenches	Reciprocating saw

1/4 in. nut driver

Non-corrosive leak check solution

1/2 - 3/4 in. length, #6 or #8 Self-drilling screws

Caulking material (300 ºF minimum continuous exposure rating)

D. Inspect Appliance and Components

- Carefully remove the appliance and components from the packaging.
- The vent system components and decorative barrier fronts may be shipped in separate packages.
- If packaged separately, the log set and appliance grate must be installed.
- Report to your dealer any parts damaged in shipment, particularly the condition of the glass.
- This product is factory-equipped with an IntelliFire Touch remote control, which was paired to the appliance at the factory. This specific remote control needs to remain with the contents of the manual bag. Do not install batteries in the remote control until performing the final appliance setup and checklist.
- **Read all of the instructions before starting the installation. Follow these instructions carefully during the installation to ensure maximum safety and benefit.**

WARNING! Risk of Fire or Explosion! *Damaged parts could impair safe operation.* ***DO NOT i****nstall damaged, incomplete or substitute components. Keep appliance dry.*

Hearth & Home Technologies disclaims any responsibility for, and the warranty will be voided by, the following actions:

- Installation and use of any damaged appliance or vent system component.
- Modification of the appliance or vent system.
- Installation other than as instructed by Hearth & Home Technologies.
- Improper positioning of the gas logs or the glass assembly.
- Installation and/or use of any component part not approved by Hearth & Home Technologies.

Any such action may cause a fire hazard.

WARNING! Risk of Fire, Explosion or Electric Shock! ***DO NOT*** *use this appliance if any part has been under water. Call a qualified service technician to inspect the appliance and to replace any part of the control system and/or gas control which has been under water.*

3 Framing and Clearances

A. Appliance/Decorative Barrier Front Dimension Diagrams

Dimensions are actual appliance dimensions. Use for reference only. For framing dimensions and clearances refer to Section 5.

APPLIANCE DIMENSION DIAGRAM (MARQ36IN-B)

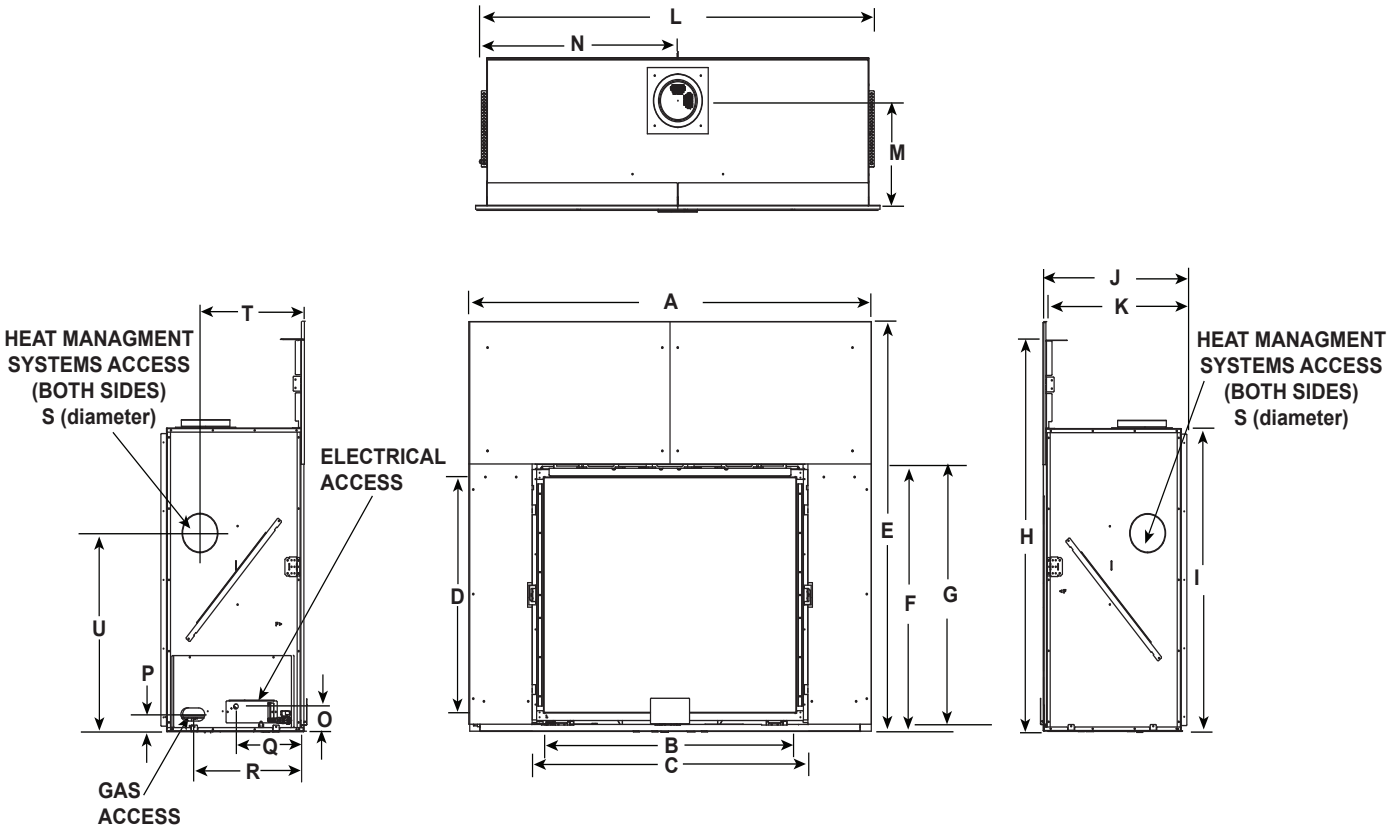

Appliance Dimensions Table MARQ36IN-B

Location	Inches	Millimeters
A	61	1549
B	35-7/8	911
C	39-7/8	1013
D	31-1/16	789
E	57-5/8	1464
F	35-3/16	894
G	34-3/16	868
H	54-15/16	1395
I	41-3/8	1051
J	24	610
K	23-1/2	597

Location	Inches	Millimeters
L	59-1/4	1505
M	16	406
N	29-5/8	752
O	3-7/8	98
P	2-3/4	70
Q	10-7/8	276
R	16-1/8	410
S	6	152
T	16-7/8	429
U	25-5/8	651

Figure 3.1 Appliance Dimensions (MARQ36IN-B)

APPLIANCE DIMENSION DIAGRAM (MARQ42IN-B)

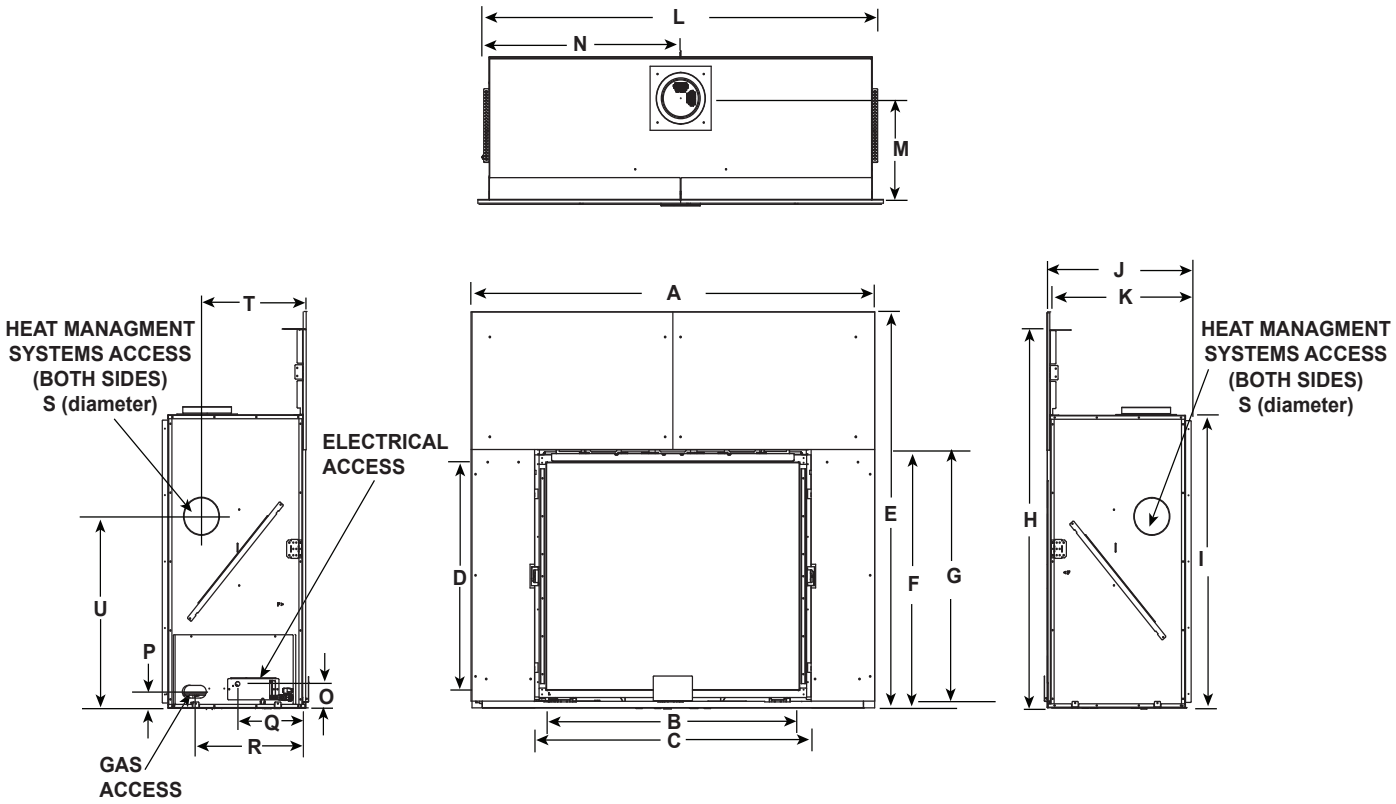

Appliance Dimensions Table MARQ42IN-B

Location	Inches	Millimeters
A	67	1702
B	41-7/8	1064
C	45-7/8	1165
D	36-1/16	916
E	62-5/8	1591
F	40-3/16	1021
G	39-3/16	995
H	59-15/16	1522
I	46-3/8	1178
J	24	610
K	23-1/2	597

Location	Inches	Millimeters
L	65-5/16	1659
M	16	406
N	32-11/16	830
O	3-7/8	98
P	2-3/4	70
Q	10-7/8	276
R	16-1/8	410
S	6	152
T	16-7/8	429
U	30-5/8	778

Figure 3.2 Appliance Dimensions (MARQ42IN-B)

DECORATIVE BARRIER FRONT DIMENSION DIAGRAM

IMPORTANT! This fireplace requires an installed decorative barrier front to prevent direct contact with the hot viewing glass. DO NOT operate the fireplace with the barrier removed.

Decorative barrier front must be ordered at time of fireplace purchase. If decorative barrier front is not present, contact dealer.

Note: See Section 10 for hearth, mantel and finishing detail.

MARQ36IN-B

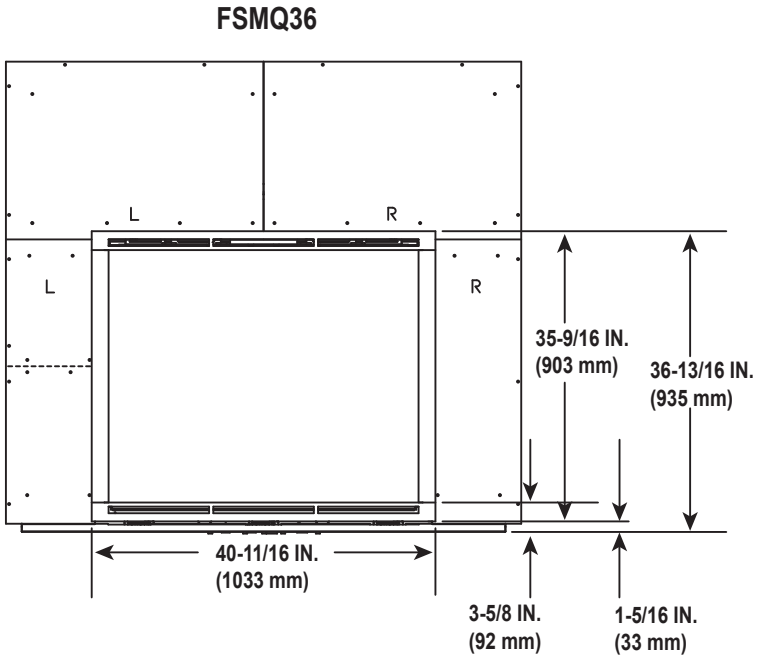

MARQ42IN-B

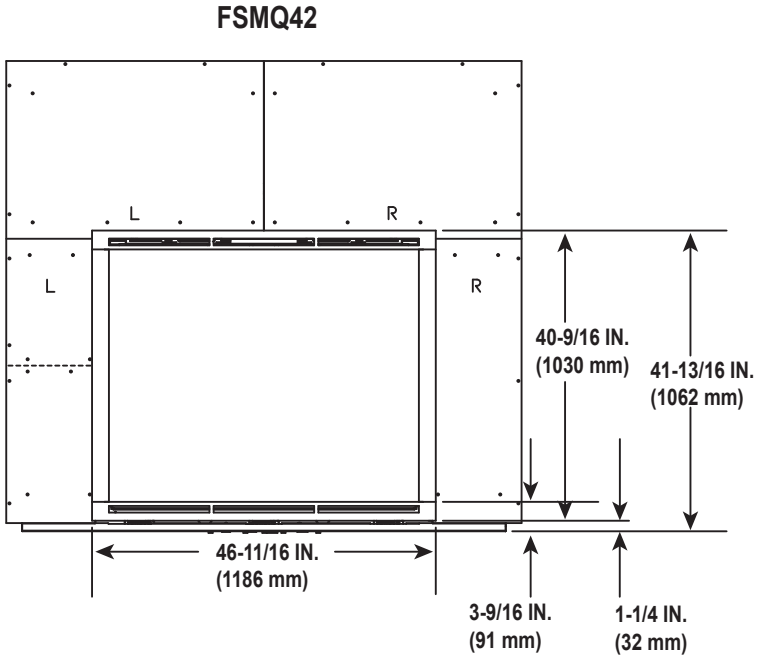

Figure 3.3 Decorative Barrier Front Dimensions

B. Clearances to Combustibles

When selecting a location for the appliance it is important to consider the required clearances to walls and allow sufficient clearance for heat management systems venting. See Figure 3.3 and Figure 3.4.

WARNING! Risk of Fire or Burns! *Provide adequate clearance around air openings and for service access. Due to high temperatures, the appliance should be located out of traffic and away from furniture and draperies.*

NOTICE: *Illustrations reflect typical installations and are FOR DESIGN PURPOSES ONLY. Illustrations/diagrams are not drawn to scale. Actual installation may vary due to individual design preference.*

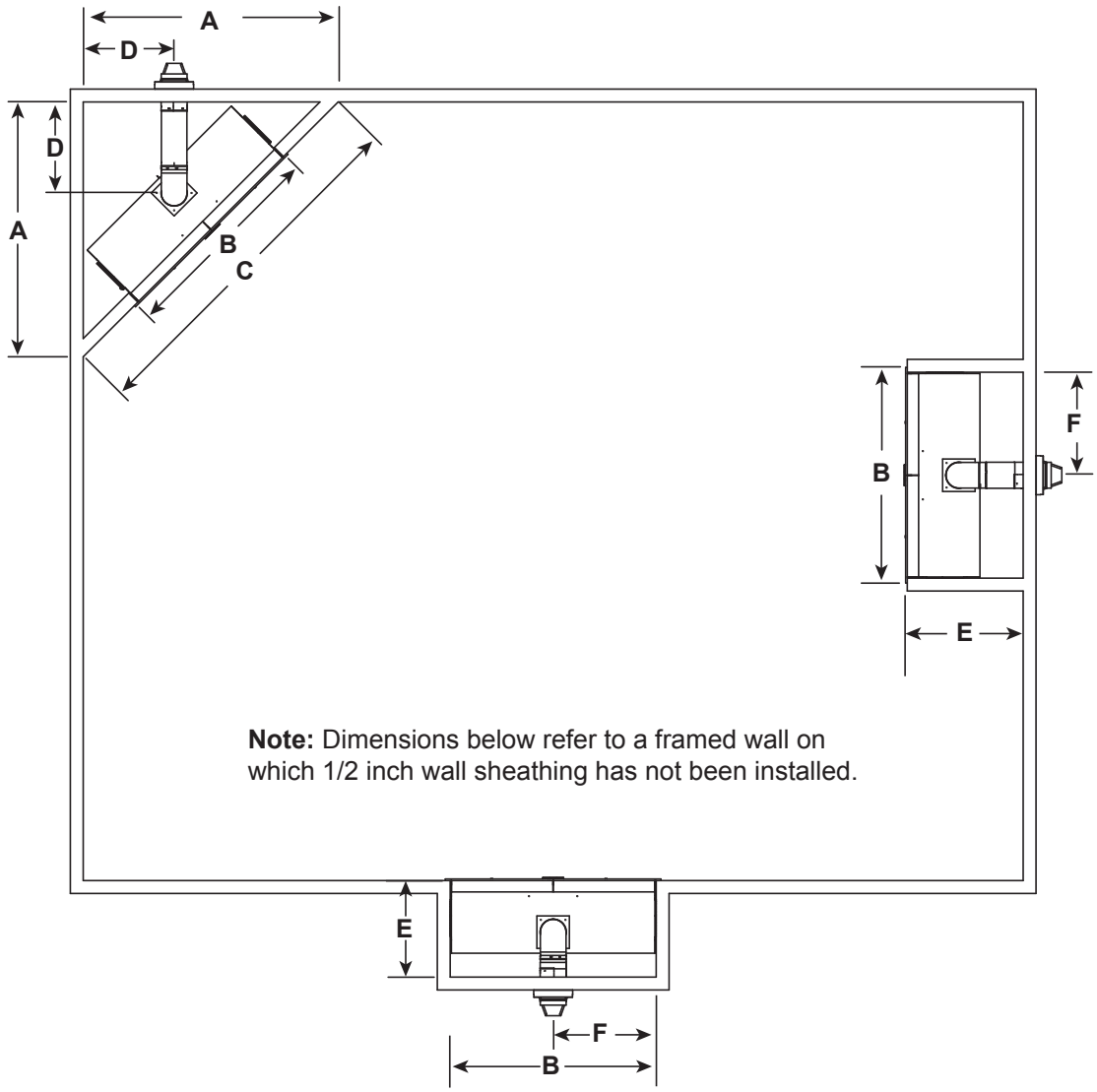

		A	B	C	D	E	F
MARQ36IN-B	Inches	75-5/16	59-1/2	106-1/2	26-3/8	24	29-3/4
	Millimeters	1913	1511	2705	670	610	756
MARQ42IN-B	Inches	79-5/8	65-9/16	112-9/16	28-1/2	24	32-13/16
	Millimeters	1921	1665	2859	724	610	833

➔ **Figure 3.4 Appliance Locations**

Non-Combustible Zone

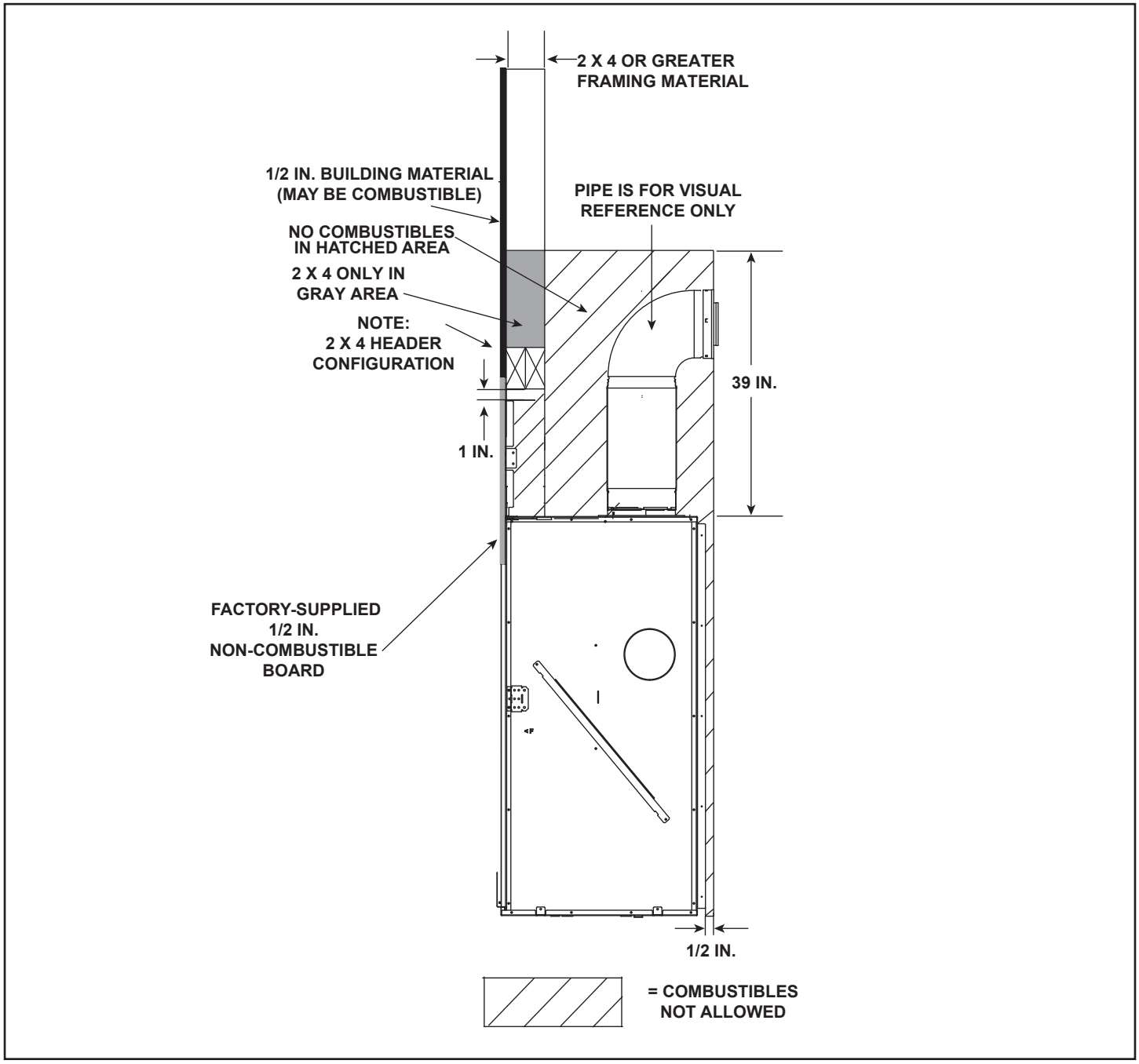

Figure 3.5 Non-Combustible Zone

C. Constructing the Appliance Chase

A chase is a vertical box-like structure built to enclose the gas appliance and/or its vent system. In cooler climates the vent should be enclosed inside the chase.

NOTICE: *Treatment of ceiling firestops and wall shield firestops and construction of the chase may vary with the type of building. These instructions are not substitutes for the requirements of local building codes. Therefore, you MUST check local building codes to determine the requirements to these steps.*

NOTICE: *When installing a sprinkler head in a fireplace chase, it is recommended to use a sprinkler head with a sprinkler activation temperature classified as Extra High. Keep sprinkler head away from vent and chimney.*

Chases should be constructed in the manner of all outside walls of the home to prevent cold air drafting problems. The chase should not break the outside building envelope in any manner.

Walls, ceiling, base plate and cantilever floor of the chase should be insulated. Vapor and air infiltration barriers should be installed in the chase as per regional codes for the rest of the home. Additionally, in regions where cold air infiltration may be an issue, the inside surfaces may be sheetrocked and taped for maximum air tightness.

To further prevent drafts, the wall shield and ceiling firestops should be caulked with caulk with a minimum of 300 ºF continuous exposure rating to seal gaps. Gas line holes and other openings should be caulked with caulk with a minimum of 300 ºF continuous exposure rating or stuffed with unfaced insulation. If the appliance is being installed on a cement surface, a layer of plywood may be placed underneath to prevent conducting cold up into the room.

NOTICE: *Install appliance on hard metal or wood surfaces extending full width and depth.* ***DO NOT*** *install directly on carpeting, vinyl, tile or any combustible material other than wood.*

WARNING! Risk of Fire! *Maintain specified air space clearances to appliance and vent pipe:*

- Insulation and other materials must be secured to prevent accidental contact.
- The chase must be properly blocked to prevent blown insulation or other combustibles from entering and making contact with fireplace or chimney.
- Failure to maintain airspace may cause overheating and a fire.

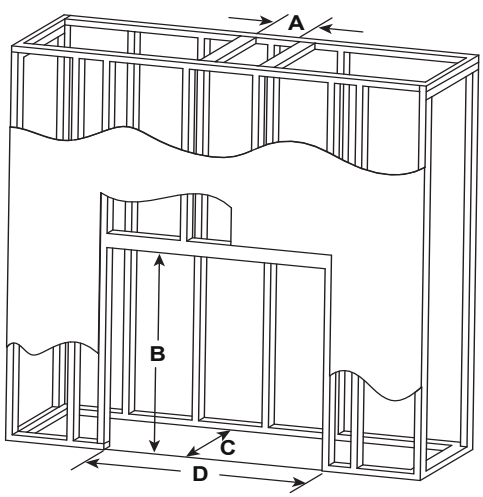

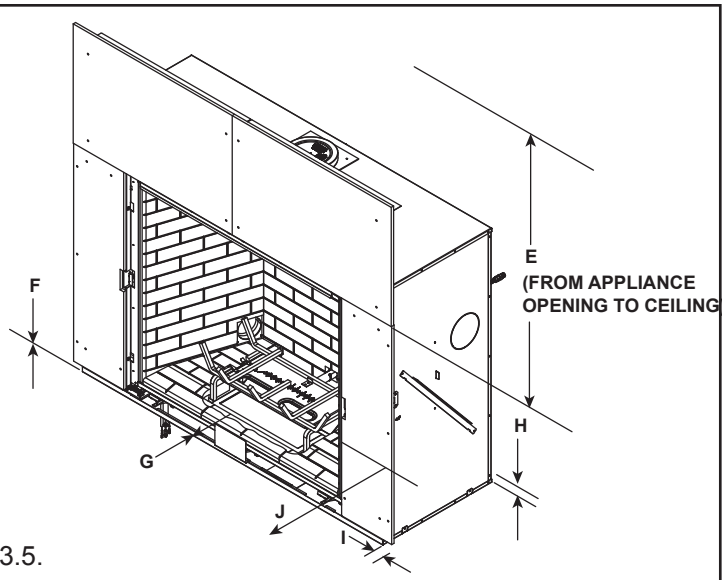

NOTE: 2 X 4 Header positioned vertically. See also Figure 3.5.

		* MINIMUM FRAMING DIMENSIONS USING 2 X 4 CONSTRUCTION									
		A	B	C	D	E	F	G**	H	I	J
		Rough Opening (Vent Pipe)	Rough Opening (Height)	Rough Opening (Depth)	Rough Opening (Width)	Clearance to Ceiling	Combustible Floor	Combustible Flooring	Behind Appliance	Sides of Appliance	Front of Appliance
MARQ36IN-B	Inches	10	56	24	59-1/2	52	0	See Section 3.D.	1	1	36
	Millimeters	254	1422	610	1511	1321	0		25	25	914
MARQ42IN-B	Inches	10	61	24	65-9/16	52	0		1	1	36
	Millimeters	254	1549	610	1665	1321	0		25	25	914

* Adjust framing dimensions for interior sheathing (such as sheetrock)

** For installations with vinyl flooring, see Section 3.E.

Figure 3.6 Clearances to Combustibles (2 X 4 Construction)

2 X 6 OR GREATER NOT ALLOWED IN SHADED AREA

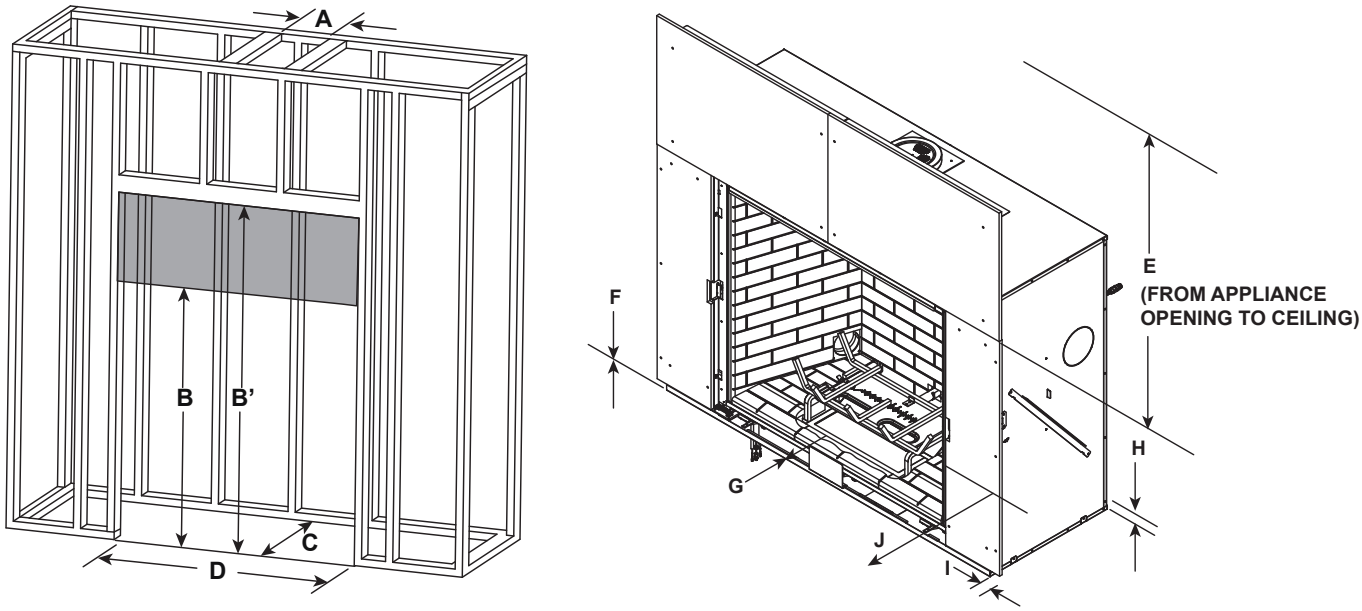

NOTE: 2 X 4 Header positioned vertically. See also Figure 3.5.

	* MINIMUM FRAMING DIMENSIONS USING 2 X 6 CONSTRUCTION						
		A	B	B'	C	D	E
		Rough Opening (Vent Pipe)	Rough Opening (Height)	**Rough Opening Height	Rough Opening (Depth)	Rough Opening (Width)	Clearance to Ceiling
MARQ36IN-B	Inches	10	56	80-3/8	24	59-1/2	52
	Millimeters	254	1422	2042	610	1511	1321
MARQ42IN-B	Inches	10	61	85-3/8	24	65-9/16	52
	Millimeters	254	1549	2169	610	1665	1321

	* MINIMUM FRAMING DIMENSIONS USING 2 X 6 CONSTRUCTION					
		F	G***	H	I	J
		Combustible Floor	Combustible Flooring	Behind Appliance	Sides of Appliance	Front of Appliance
MARQ36IN-B	Inches	0	See Section 3.D.	1	1	36
	Millimeters	0		25	25	914
MARQ42IN-B	Inches	0		1	1	36
	Millimeters	0		25	25	914

* Adjust framing dimensions for interior sheathing (such as sheetrock).
** 2 x 4 material must be framed down from 2 x 6 rough opening height B' to rough opening height B.
*** For installations with vinyl flooring, see Section 3.E.

Figure 3.7 Clearances to Combustibles (2 x 6 Construction)

D. Hearth Extension

WARNING! Risk of Fire! *Non-combustible hearth extension may be required when appliance is installed on combustible surface.*

- Hearth extension must be non-combustible and serves to protect combustible floors in front of appliance. See Figure 3.8 and Figure 3.9.
- The base of the fireplace may sit on a combustible surface. See Figure 3.9. The area in front of the appliance must be protected by a non-combustible hearth extension, unless the appliance is raised a minimum of three inches above the combustible floor or hearth. See Figure 3.9 and Figure 3.10.
- If a hearth greater than one inch in thickness is desired, the appliance must be raised by the equivalent height to ensure that the hearth extension does not interfere with the installation of the glass assembly required for fireplace operation. See Figure 3.9.

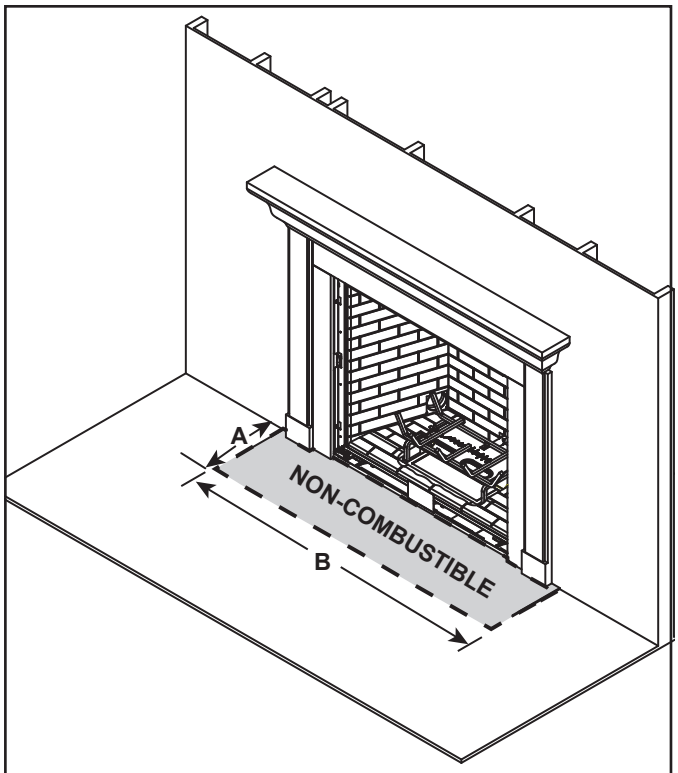

MODEL	A		B	
	in.	mm	in.	mm
MARQ36IN-B	12	305	57-1/4	1454
MARQ42IN-B	12	305	63-5/16	1608

Figure 3.8 Non-Combustible Hearth Extension Dimensions

NOTICE: DO NOT *install a hearth that is greater than one inch thick. Hearth will interfere with installation of glass assembly. Total hearth height must not exceed one inch from bottom of appliance when appliance is installed directly on floor (including mortar, backer material, etc.).*

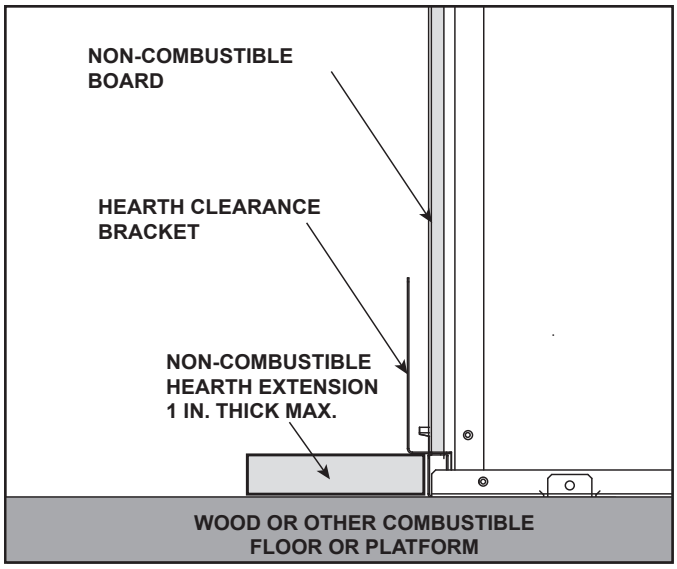

Figure 3.9 Appliance Installed on Combustible Surface Non-Combustible Hearth Extension REQUIRED.

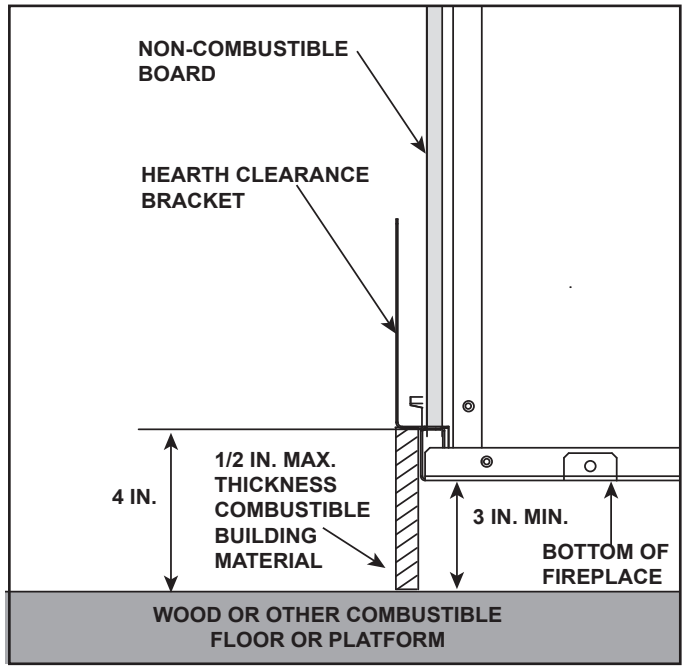

Figure 3.10 Appliance Raised a Minimum of 3 Inches Above Combustible Surface. Non-Combustible Hearth Extension NOT REQUIRED.

E. Floor Protection

Vinyl Flooring

Vinyl flooring is sensitive to heat. To avoid damage to the vinyl flooring, a 12 inch minimum x 12 inch minimum hearth is recommended when using vinyl flooring up to the wall. See Figure 3.11. If no hearth is used, it is recommended to provide a minimum of 36 inches of clearance in front of the appliance to the vinyl flooring OR the bottom of the appliance should be raised a minimum of 24 inches off of the floor to allow the vinyl flooring to be installed up to the wall.

NOTICE: *Clearances that do not meet the minimum guidelines could result in damage or buckling to the vinyl flooring and is done at the installer's risk.*

Hearth and Home Technologies does not recommend adhesive based vinyl flooring products due to thermal expansion during operation. Floating style flooring can be used, but it will reach temperatures up to 110 °F (based on ambient temperature of 70 °F). Consult the manufacturer's flooring specifications to ensure compatibility.

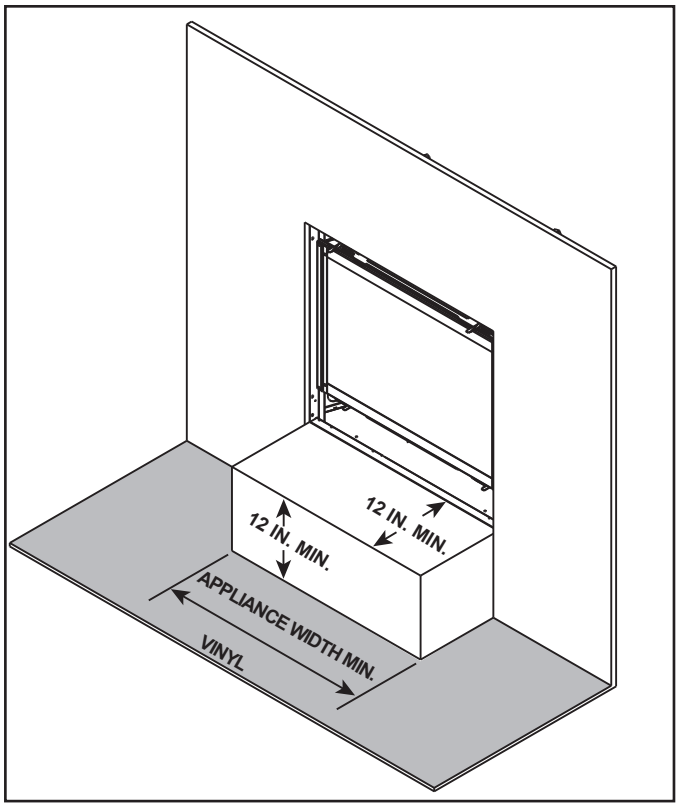

Figure 3.11 Vinyl Flooring Recommendations

4 Termination Location and Vent Information

A. Approved Pipe

WARNING! Risk of Fire, Delayed Ignition or Asphyxiation. *This appliance requires a separate vent.* ***DO NOT*** *vent to a pipe serving any other appliance.*

This appliance is only approved for use with Hearth & Home Technologies DVP or SLP venting systems. Refer to Section 12.A for vent component information and dimensions. Only use listed decorative termination caps/shrouds with Hearth & Home Technologies approved venting systems.

DO NOT mix pipe, fittings or joining methods from different manufacturers.

The pipe is tested to be run inside an enclosed wall. There is no requirement for inspection openings at each joint within the wall.

B. Vent Termination Minimum Clearances

⚠ WARNING

Fire Risk.

Maintain vent clearance to combustibles as specified.

- **DO NOT** pack air space with insulation or other materials.

Failure to keep insulation or other materials away from vent pipe could cause overheating and fire.

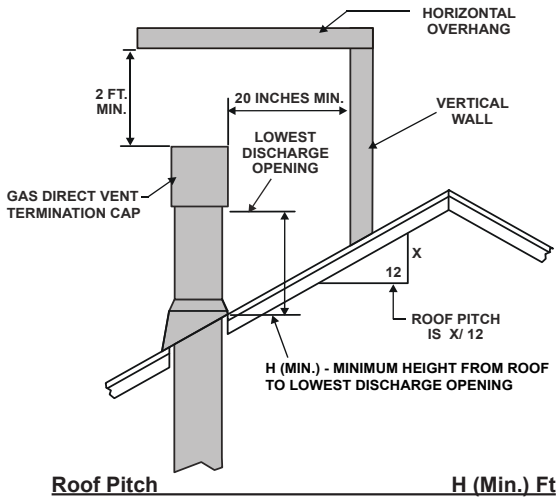

Roof Pitch	H (Min.) Ft
Flat to 6/12	1.0*
Over 6/12 to 7/12	1.25*
Over 7/12 to 8/12	1.5*
Over 8/12 to 9/12	2.0*
Over 9/12 to 10/12	2.5*
Over 10/12 to 11/12	3.25
Over 11/12 to 12/12	4.0
Over 12/12 to 14/12	5.0
Over 14/12 to 16/12	6.0
Over 16/12 to 18/12	7.0
Over 18/12 to 20/12	7.5
Over 20/12 to 21/12	8.0

* H minimum may vary depending on regional snowfall. Refer to local codes.

Figure 4.1 Minimum Height From Roof to Lowest Discharge Opening

A	B
6 in. (minimum) up to 20 in. *152 mm/508 mm*	18 in. minimum *457 mm*
20 in. and over	0 in. minimum

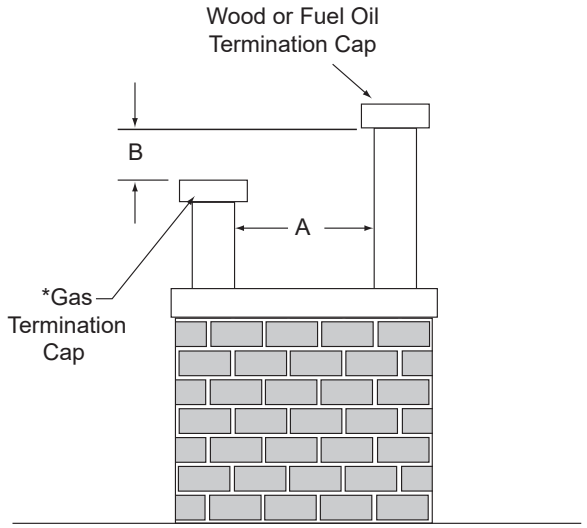

* If two gas terminations are present, they may be level (B = 0 inches) provided A is a minimum of 6 inches.

Figure 4.2 Staggered Termination Caps

CAUTION! Risk of Burns! *Termination caps are HOT, consider proximity to doors, traffic areas or where people may pass or gather (sidewalk, deck, patio, etc.). Listed cap shields available. Contact your dealer.*

- Local codes or regulations may require different clearances.
- Hearth & Home Technologies assumes no responsibility for the improper performance of the appliance when the venting system does not meet these requirements.
- Vinyl protection kits are suggested for use with vinyl siding.
- Measure horizontal and vertical termination cap clearances as noted in Figure 4.3.

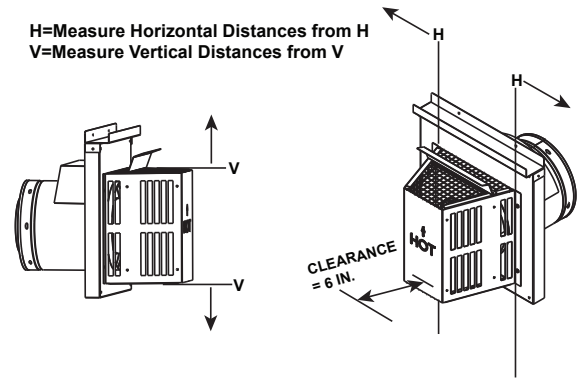

Figure 4.3

C. Vent Terminal Clearances

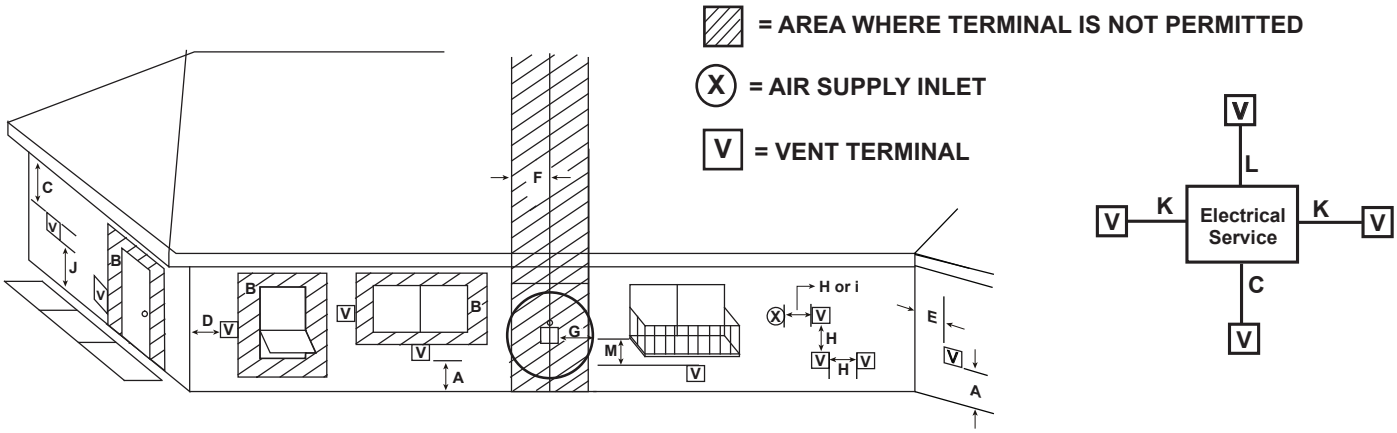

U.S.A. Installations: In accordance with the current ANSI Z223.1/NFPA 54, National Fuel Gas Code.
Canadian Installations: In accordance with the current CSA B149.1, Natural Gas and Propane Installation Code.

		U.S.A.	CANADA
A	Clearance above grade,veranda, porch, deck, balcony or roof.	12 in. (305 mm)	12 in. (305 mm)
B	Clearance to window or door that may be opened, or to permanently closed window	12 in. (305 mm)	112 in. (305 mm)
C	Clearance below unventilated soffit	18 in. (457 mm)	18 in. (457 mm)
	Clearance below ventilated soffit	18 in. (457 mm)	18 in. (457 mm)
	Clearance below any vinyl soffits and electrical service	42 in. (1067 mm)	42 in. (1067 mm)
D	Clearance to outside corner	6 in. (152 mm)	6 in. (152 mm)
E	Clearance to inside corner	6 in. (152 mm)	6 in. (152 mm)
F	Clearance to each side of center line extended above gas meter/regulator assembly	Clearance in accordance with local installation codes and the requirements of the gas supplier.	3 ft (914 mm) within a height 15 ft (4.5 m) above the meter/regulator assembly
G	Clearance to gas service regulator vent outlet	3 ft (914 mm)	3 ft (914 mm)
H	Clearance to non-mechanical air supply inlet to building or the combustion air inlet to any other appliance termination (mechanical or non-mechanical)	12 in. (305 mm)	12 in. (305 mm)
I	Clearance to a mechanical (powered) air supply inlet ***(All mechanical air intakes within 10 feet of a horizontal termination cap must be a minimum of 3 feet below termination.)	3 ft (914 mm)***	6 ft (1.8 m)
J	On **public** property: clearance above paved sidewalk or a paved driveway.	7 ft (2.1 m)	7 ft (2.1 m)**
	**(A vent shall not terminate directly above a sidewalk or paved driveway which is located between two single family dwellings and serves both dwellings.)		
K	Clearance from sides of electrical service	6 in. (152 mm)	6 in. (152 mm)
	Location of the vent termination must not interfere with access to the electrical service.		
L	Clearance above electrical service	12 in. (305 mm)	12 in. (305 mm)
	Location of the vent termination must not interfere with access to the electrical service.		
M	Clearance under veranda, porch, deck, balcony or overhang *(Permitted only if veranda, porch, deck, or balcony is fully open on a minimum of two sides beneath the floor.)	24 in. (610 mm)*	24 in. (610 mm)*
	Vinyl or composite overhang	42 in. (1067 mm)	42 in. (1067 mm)

Figure 4.4 Minimum Clearances for Termination

E. Use of Elbows

Diagonal runs have both vertical and horizontal vent aspects when calculating the effects. Use the rise for the vertical aspect and the run for the horizontal aspect. See Figure 4.5.

Two 45º elbows may be used in place of one 90º elbow. On 45º runs, one foot of diagonal is equal to 8-1/2 in. (216 mm) horizontal run and 8-1/2 in. (216 mm) vertical run. A length of straight pipe is allowed between two 45º elbows. See Figure 4.5.

Figure 4.6 shows the vertical and horizontal offsets for DVP elbows.

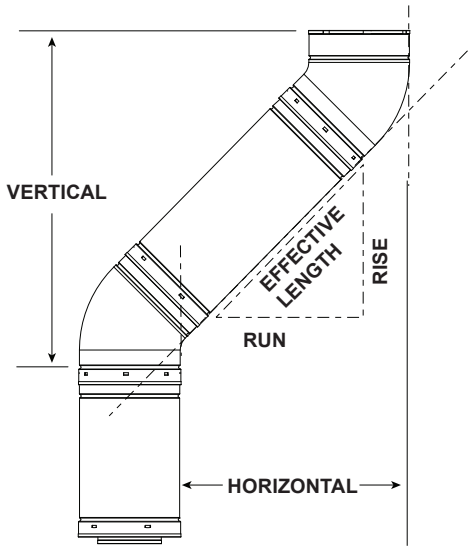

DVP Pipe	Effective Length		Rise/Run	
	Inches	Millimeters	Inches	Millimeters
DVP4	4	102	2-3/4	70
DVP6	6	152	4-1/4	108
DVP12	12	305	8-1/2	216
DVP24	24	610	17	432
DVP36	36	914	25-1/2	648
DVP48	48	1219	34	864
DVP6A	3 to 6	76 to 152	2-1/8-4-1/4	54-108
DVP12A	3 to 12	76 to 305	2-1/8-8-1/2	54-216

Figure 4.5

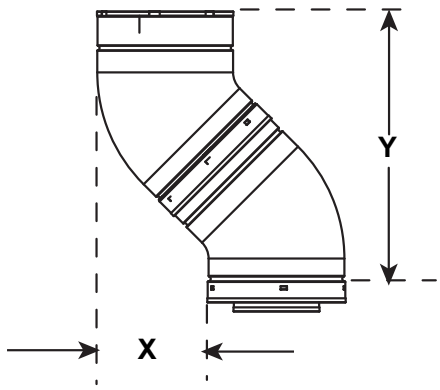

Vent Type	X		Y	
	Inches	Millimeters	Inches	Millimeters
DVP	6-5/8	168	16-1/2	419

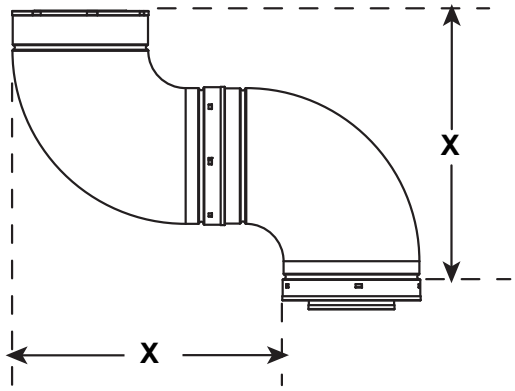

Vent Type	X	
	Inches	Millimeters
DVP	16-1/4	413

Figure 4.6 Vertical and Horizontal Offset for DVP Elbows

F. Measuring Standards

Vertical and horizontal measurements listed in the vent diagrams were made using the following standards:

- Pipe measurements are shown using the effective length of pipe. See Section 12.A (Figure 12.1) for information on effective length of pipe components.
- Horizontal terminations are measured to the outside mounting surface (flange of termination cap) (see Figure 4.7).
- Vertical terminations are measured to top of last section of pipe. See Figure 4.8.
- Horizontal pipe installed level with no rise.

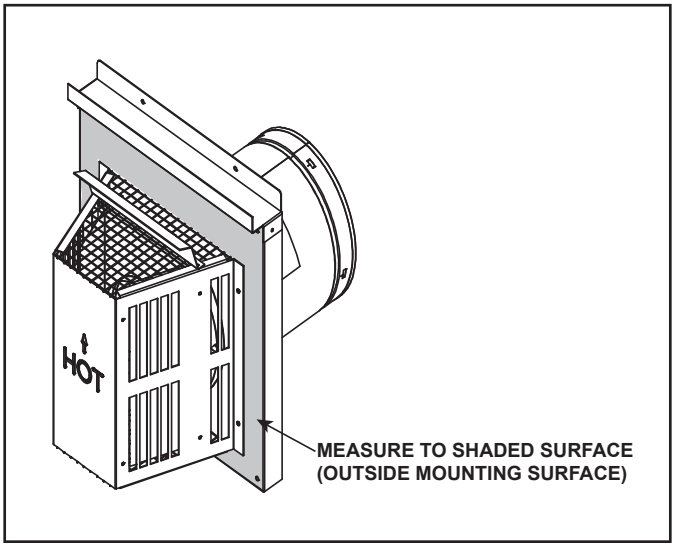

Figure 4.7 Measure to Outside Mounting Surface

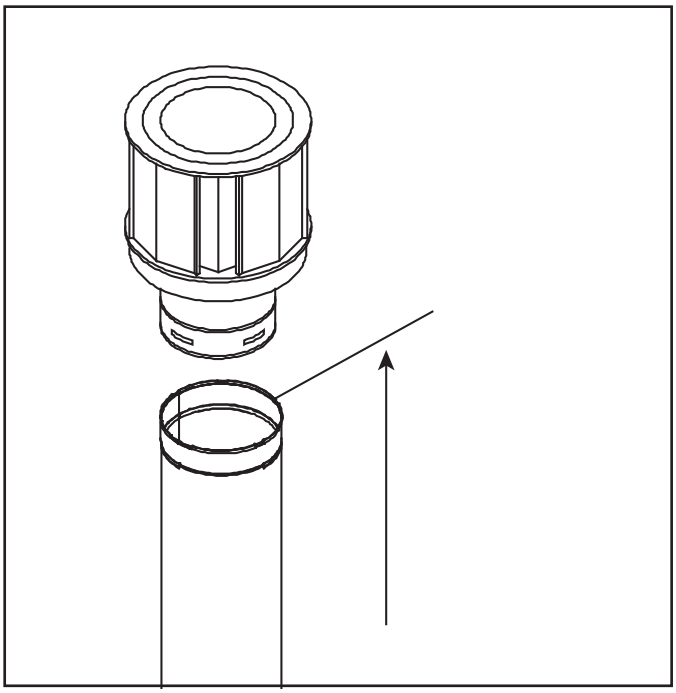

Figure 4.8 Measure to Top of Last Section of Pipe

G. Vent Diagrams

WARNING! Risk of Fire. *This appliance requires a minimum of 24 inches of vertical venting before attaching any elbow to the appliance.* ***DO NOT*** *attach elbow directly to the appliance.*

General Rules:

- This appliance is approved for use with Hearth & Home Technologies DVP venting systems ONLY.
- When penetrating a combustible wall, a wall shield firestop must be installed.
- When penetrating a combustible ceiling, a ceiling firestop must be installed.
- This appliance requires a minimum of 24 inches of vertical pipe attached directly to the appliance starting collar before attaching a 90 degree or 45 degree elbow.
- Horizontal termination cap should have a 1/4 inch downward slant to allow any moisture in cap to be released.

Top Vent - Horizontal Termination One Elbow

Note: Flue restrictor is permitted ONLY on 30 ft. minimum vertical runs with no elbows.

MARQ36IN-B (NG/Propane), MARQ42IN-B (NG)			
V_1 Minimum		**H_1 Maximum**	
2 ft	610 mm	7 in*	178 mm
2.5 ft	762 mm	17 in	432 mm
3 ft	914 mm	2 ft	610 mm
4 ft	1.2 m	4 ft	1.2 m
5 ft	1.5 m	9 ft	2.7 m
6 ft	1.8 m	12 ft	3.7 m
7 ft	2.1 m	14 ft	4.3 m
10 ft	3.0 m	20 ft	6.1 m
20 ft	6.1 m	40 ft	12.2 m
After V_1= 6 ft then H_1 = 2 x V ft Maximum V_1 + H_1 = 60 ft Maximum *when used with approved termination caps			

MARQ42IN-B (Propane)			
V_1 Minimum		**H_1 Maximum**	
3 ft	914 mm	10 in.	254 mm
4 ft	1.2 m	4 ft	1.2 m
5 ft	1.5 m	9 ft	2.7 m
6 ft	1.8 m	12 ft	3.7 m
7 ft	2.1 m	14 ft	4.3 m
10 ft	3.0 m	20 ft	6.1 m
20 ft	6.1 m	40 ft	12.2 m
After V_1= 6 ft then H_1 = 2 x V ft Maximum V_1 + H_1 = 60 ft Maximum *when used with approved termination caps			

WARNING! Risk of Fire!

- *MARQ36IN-B (NG/Propane) and MARQ42IN-B (NG) models require a minimum of 24 inches of vertical venting before attaching any elbow to the appliance.*
- *MARQ42IN-B (Propane) model requires a minimum of 36 inches of vertical venting before attaching any elbow to the appliance.*

DO NOT attach elbow directly to the appliance.

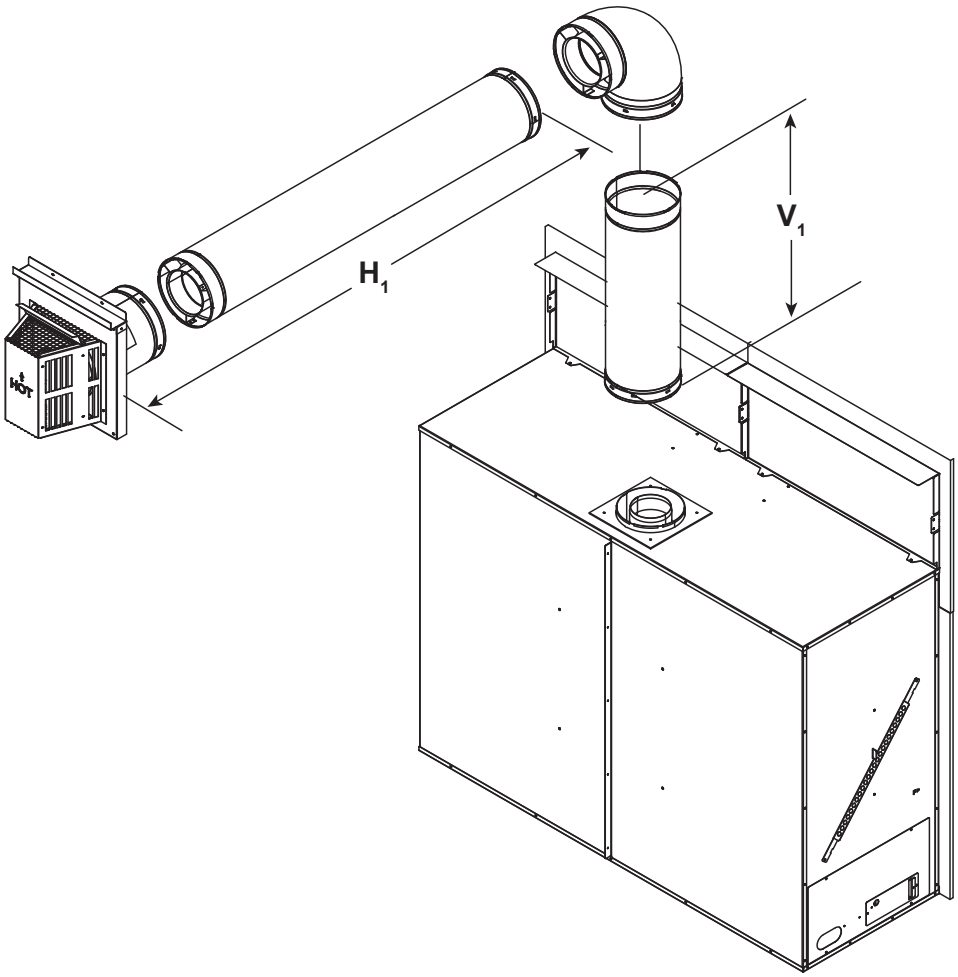

Figure 4.9

Two Elbows

WARNING! Risk of Fire!

- *MARQ36IN-B (NG/Propane) MARQ42IN-B (NG/Propane), model requires a minimum of 36 inches of vertical venting before attaching any elbow to the appliance.*

DO NOT attach elbow directly to the appliance.

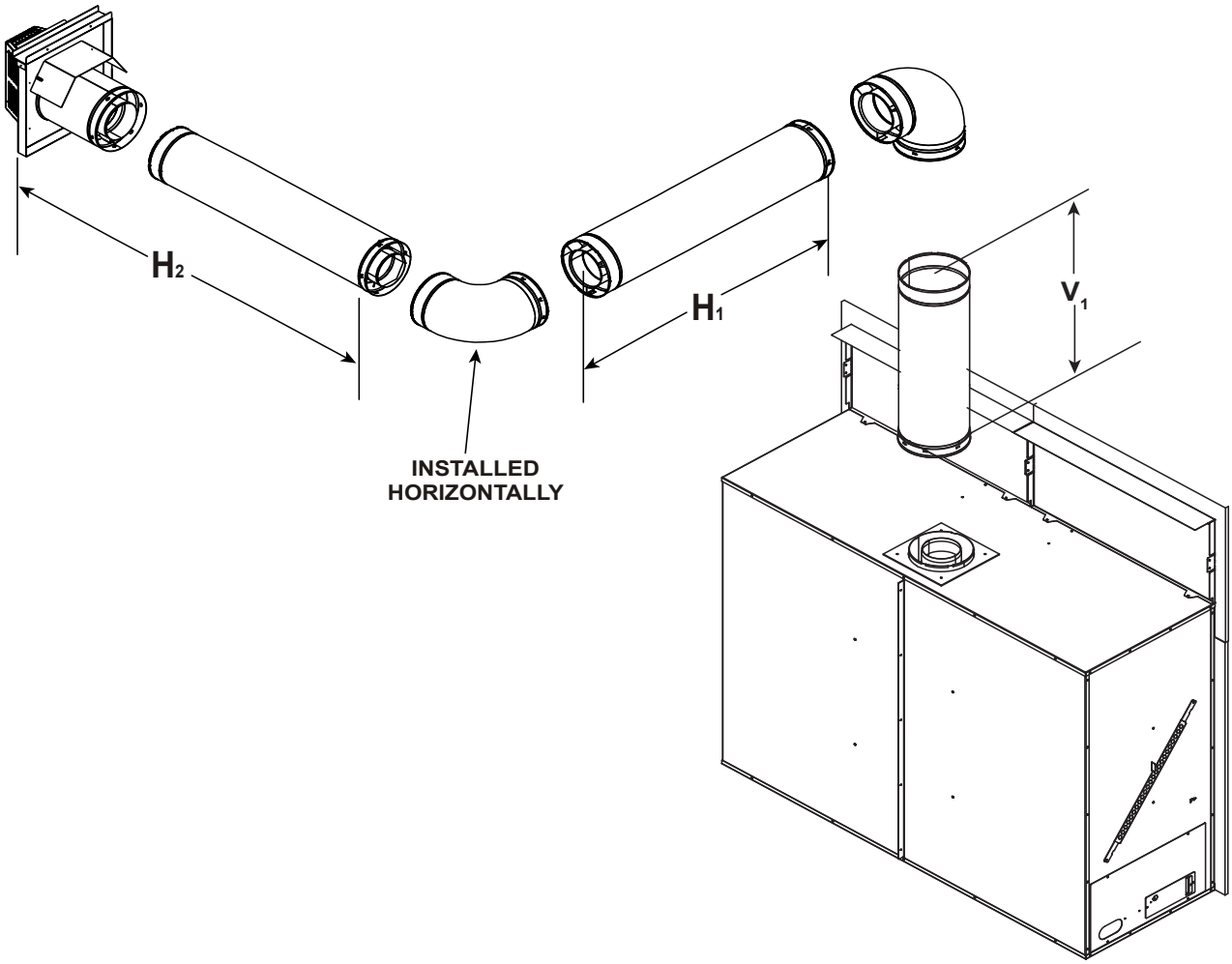

MARQ36IN-B (NG/Propane), MARQ42IN-B (NG/Propane)			
V_1 Minimum		$H_1 + H_2$	
3 ft	914 mm	18 in	457 mm
4 ft	1.2 m	3 ft	914 mm
5 ft	1.5 m	7 ft	2.1 m
6 ft	1.8 m	10 ft	3.0 m
7 ft	2.1 m	14 ft	4.3 m
8 ft	2.4 m	16 ft	4.9 m
9 ft	2.7 m	18 ft	5.5 m
10 ft	3.0 m	20 ft	6.1 m
$V_1 + H_1 + H_2$= 60 ft Maximum $H_1 + H_2$= 20 ft Maximum			

Figure 4.10

Top Vent - Horizontal Termination - *(continued)*

Three Elbows

WARNING! Risk of Fire!

•• *MARQ36IN-B (NG/Propane) and MARQ42IN-B (NG) models require a minimum of 24 inches of vertical venting before attaching any elbow to the appliance.*

• *MARQ42IN-B (Propane) model requires a minimum of 36 inches of vertical venting before attaching any elbow to the appliance.*

DO NOT attach elbow directly to the appliance.

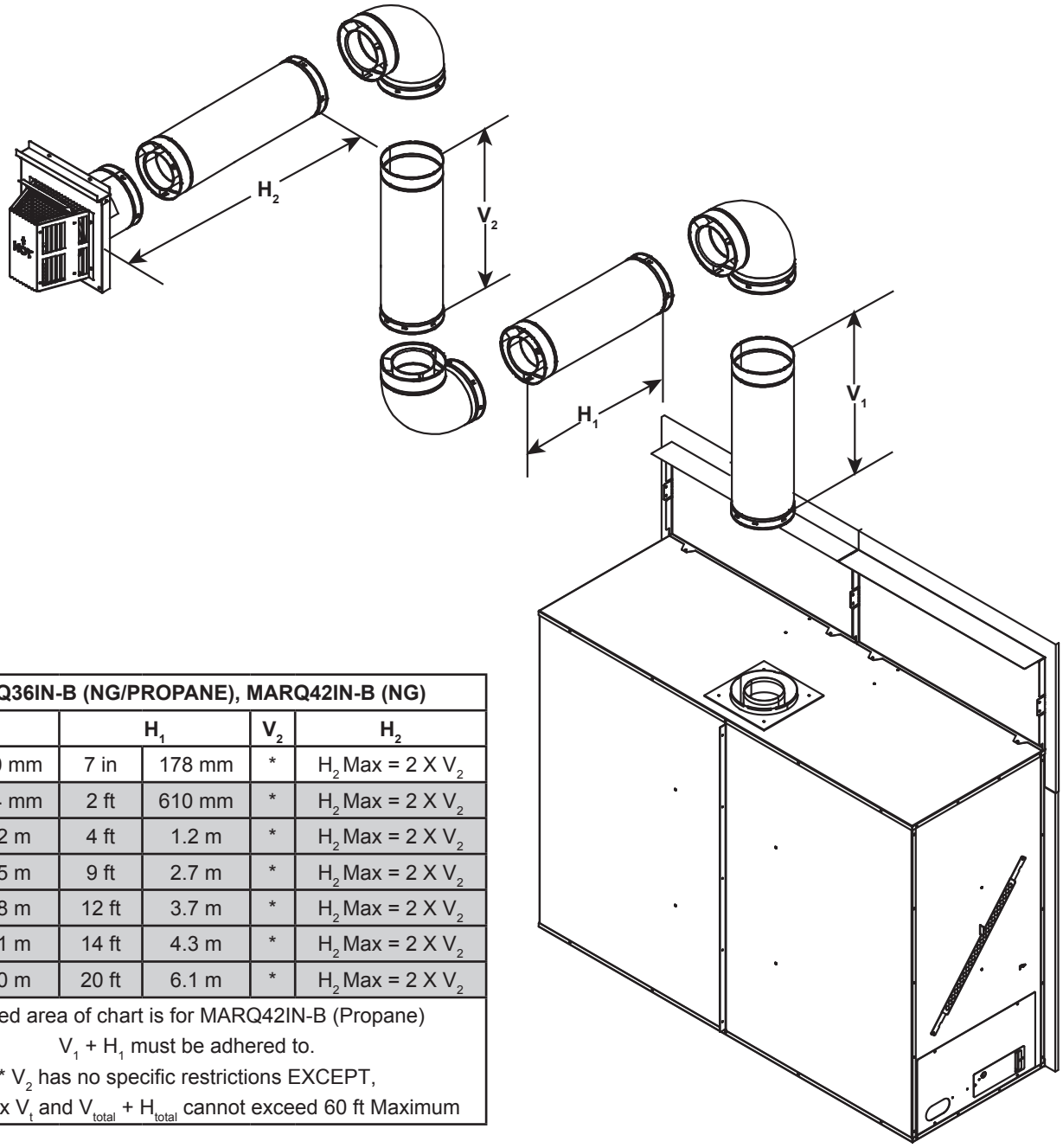

MARQ36IN-B (NG/PROPANE), MARQ42IN-B (NG)					
V_1		H_1		V_2	H_2
2 ft	610 mm	7 in	178 mm	*	H_2 Max = 2 X V_2
3 ft	914 mm	2 ft	610 mm	*	H_2 Max = 2 X V_2
4 ft	1.2 m	4 ft	1.2 m	*	H_2 Max = 2 X V_2
5 ft	1.5 m	9 ft	2.7 m	*	H_2 Max = 2 X V_2
6 ft	1.8 m	12 ft	3.7 m	*	H_2 Max = 2 X V_2
7 ft	2.1 m	14 ft	4.3 m	*	H_2 Max = 2 X V_2
10 ft	3.0 m	20 ft	6.1 m	*	H_2 Max = 2 X V_2
Shaded area of chart is for MARQ42IN-B (Propane) V_1 + H_1 must be adhered to. * V_2 has no specific restrictions EXCEPT, $H_{t\,max}$ = 2 x V_t and V_{total} + H_{total} cannot exceed 60 ft Maximum					

Figure 4.11

Top Vent - Vertical Termination

No Elbow

V_1 = 50 ft. Max. (15.2 m)
V_1 = 2 ft. Min. (610 mm)

Note: Flue restrictor is permitted ONLY on 30 ft. minimum vertical runs with no elbows.

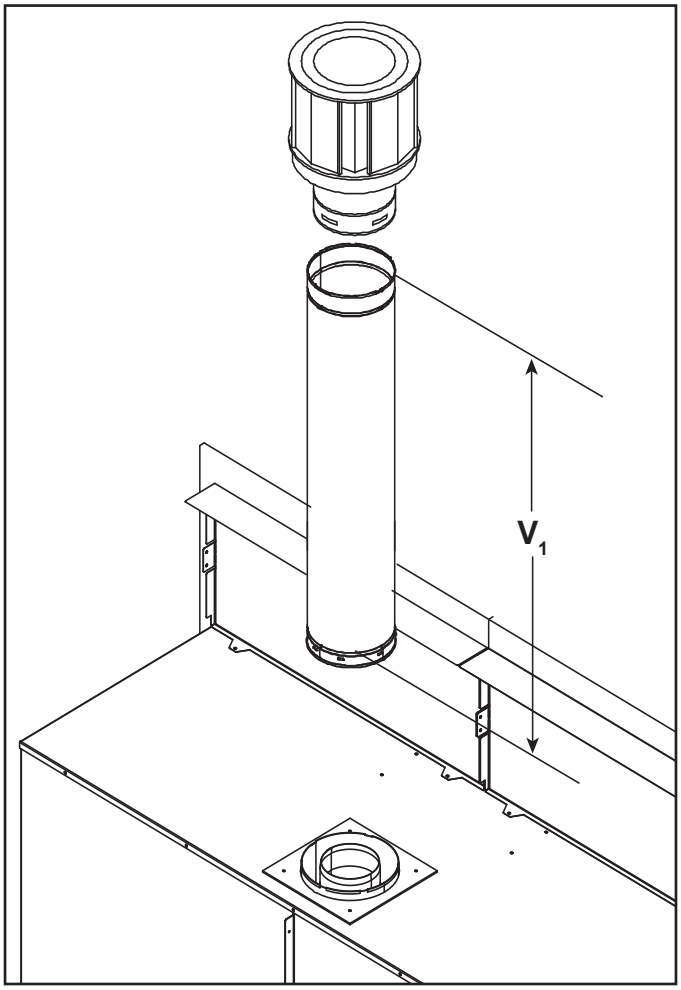

Figure 4.12

Exhaust Restrictor Instructions

Exhaust restrictors are recommended for these vertically terminated products which have excessive draft. Exhaust restrictors will compensate for high draft, and restore visual flame height. If the vent configuration has a total vertical of 31-50 feet, an exhaust restrictor may be needed. The exhaust restrictor can be located in the appliance manual bag.

1. Remove the top piece of refractory, if already installed.
2. Break the exhaust restrictor into two pieces. Do this by bending the part back and forth until it breaks. See Figure 4.14.
3. Orientate and align the two pieces of the exhaust restrictor as shown in Figure 4.14.

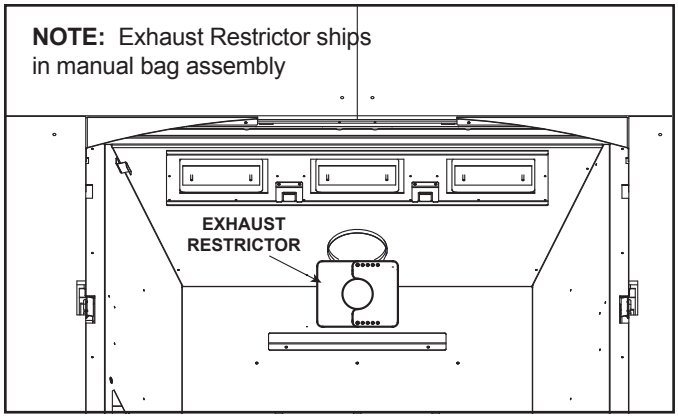

Figure 4.13 Exhaust Restrictor Installation

4. Match the amount of vertical you have in the system with the chart to find the appropriate position to set the exhaust restrictor. See Table 4.1.
5. Center the two exhaust restrictor pieces on the vent at the setting selected in step 3 and secure in place by using two self-tapping screws. See Figure 4.13.
6. Reinstall the top refractory.

Vertical Pipe	MARQ36IN-B	MARQ42IN-B
Up to 30 ft.	No Restrictor	No Restrictor
31-50 ft.	2-2	2-2

Table 4.1.

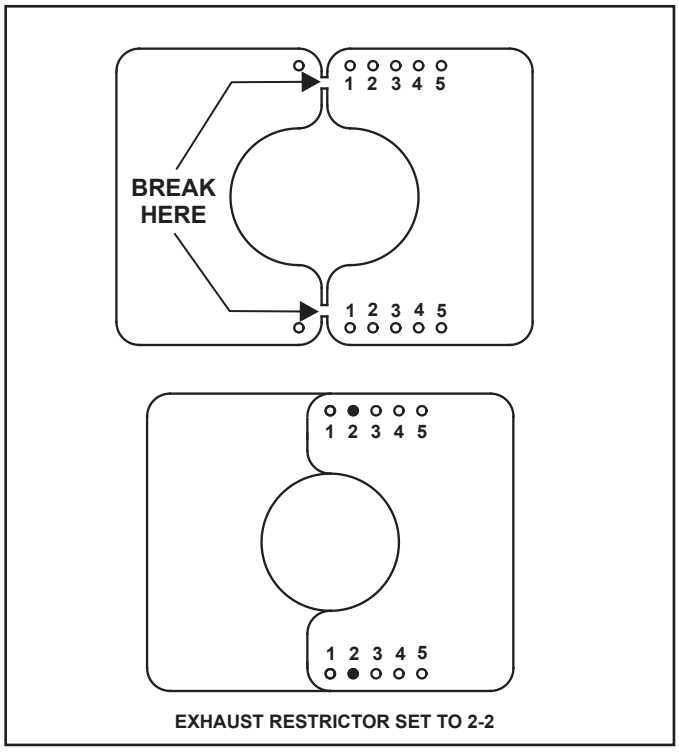

Figure 4.14 Exhaust Restrictor Installation

Two Elbows

Note: Flue restrictor is permitted ONLY on 30 ft. minimum vertical runs with no elbows.

WARNING! Risk of Fire!

- *MARQ36IN-B (NG/Propane) and MARQ42IN-B (NG) models require a minimum of 24 inches of vertical venting before attaching any elbow to the appliance.*
- *MARQ42IN-B (Propane) model requires a minimum of 36 inches of vertical venting before attaching any elbow to the appliance.*

DO NOT attach elbow directly to the appliance.

MARQ36IN-B (NG/Propane), MARQ42IN-B (NG)				
V_1		H_1		V_2
2 ft	610 mm	1 ft	305 mm	*
3 ft	914 mm	3 ft	914 mm	*
4 ft	1.2 m	4 ft	1.2 m	*
5 ft	1.5 m	9 ft	2.7 m	*
6 ft	1.8 m	12 ft	3.7 m	*

Shaded area of chart is for MARQ42IN-B (Propane)
*No specific restrictions on this value EXCEPT
$V_1 + V_2 + H_1$ = 50 ft (15.2 m) Max.
After V_1 = 6 ft, then H_1 Max.= V_1 x 2

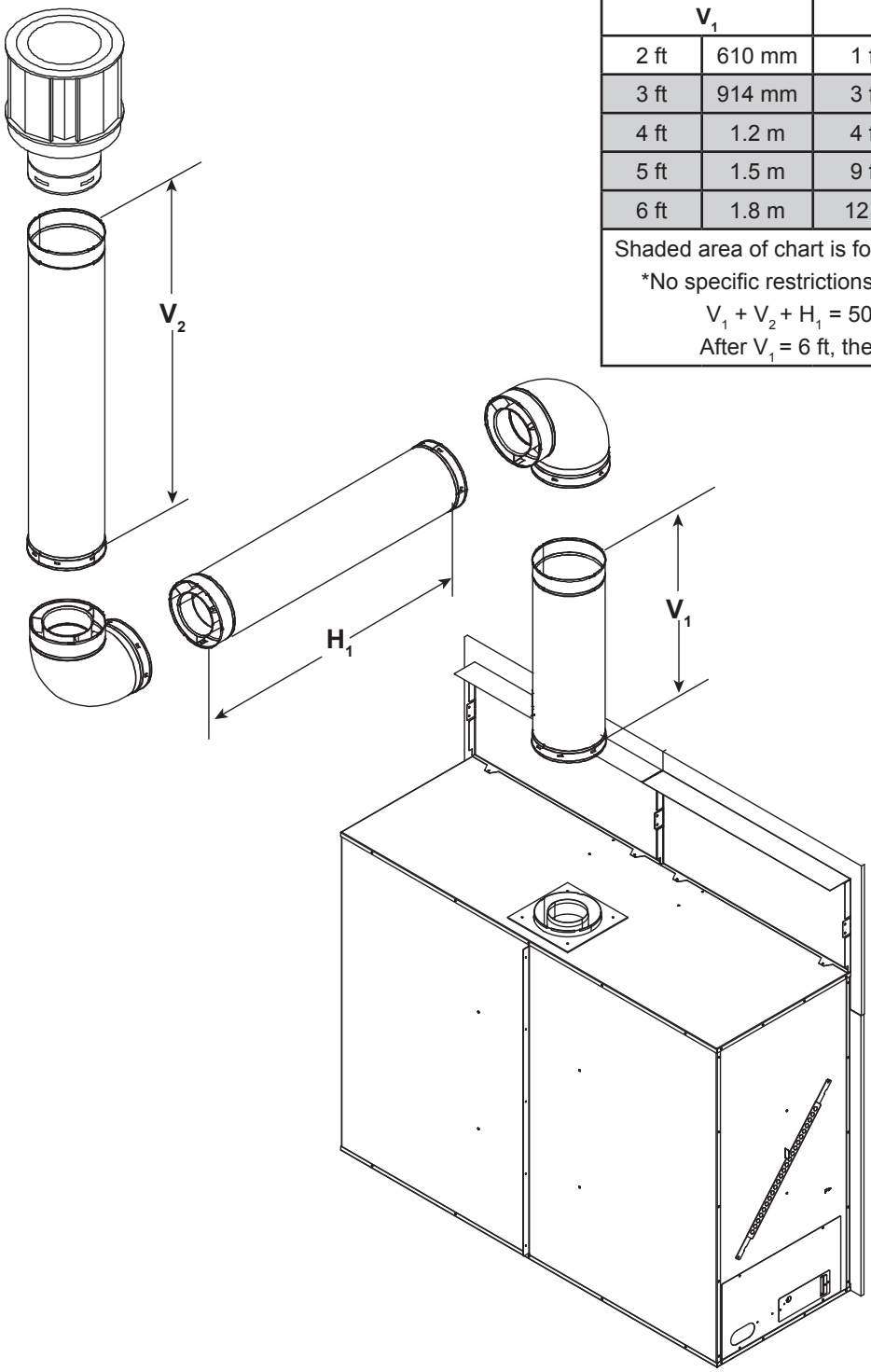

Figure 4.15

Three Elbows

Note: Flue restrictor is permitted ONLY on 30 ft. minimum vertical runs with no elbows.

WARNING! Risk of Fire!

•• *MARQ36IN-B (NG/Propane) and MARQ42IN-B (NG) models require a minimum of 24 inches of vertical venting before attaching any elbow to the appliance.*

• *MARQ42IN-B (Propane) model requires a minimum of 36 inches of vertical venting before attaching any elbow to the appliance.*

DO NOT attach elbow directly to the appliance.

MARQ36IN-B (NG/PROPANE), MARQ42IN-B (NG)						
V_1		H_1	H_2	V_2	H_t Max.	
2 ft	610 mm	*	*	**	7 in	178 mm
3 ft	914 mm	*	*	**	2 ft	610 mm
4 ft	1.2 m	*	*	**	4 ft	1.2 m
5 ft	1.5 m	*	*	**	8 ft	2.4 m
6 ft	1.8 m	*	*	**	12 ft	3.7 m
7 ft	2.1 m	*	*	**	14 ft	4.3 m
10 ft	3.0 m	*	*	**	20 ft	6.1 m

Shaded area of chart is for MARQ42IN-B (Propane)
*H_1 and H_2 has no specific restrictions EXCEPT, after V_1 = 6 ft, then H_{TOTAL} Max = 2 x V_1
**V_{TOTAL} + H_{TOTAL} = 50 ft (15.2 m) Max.

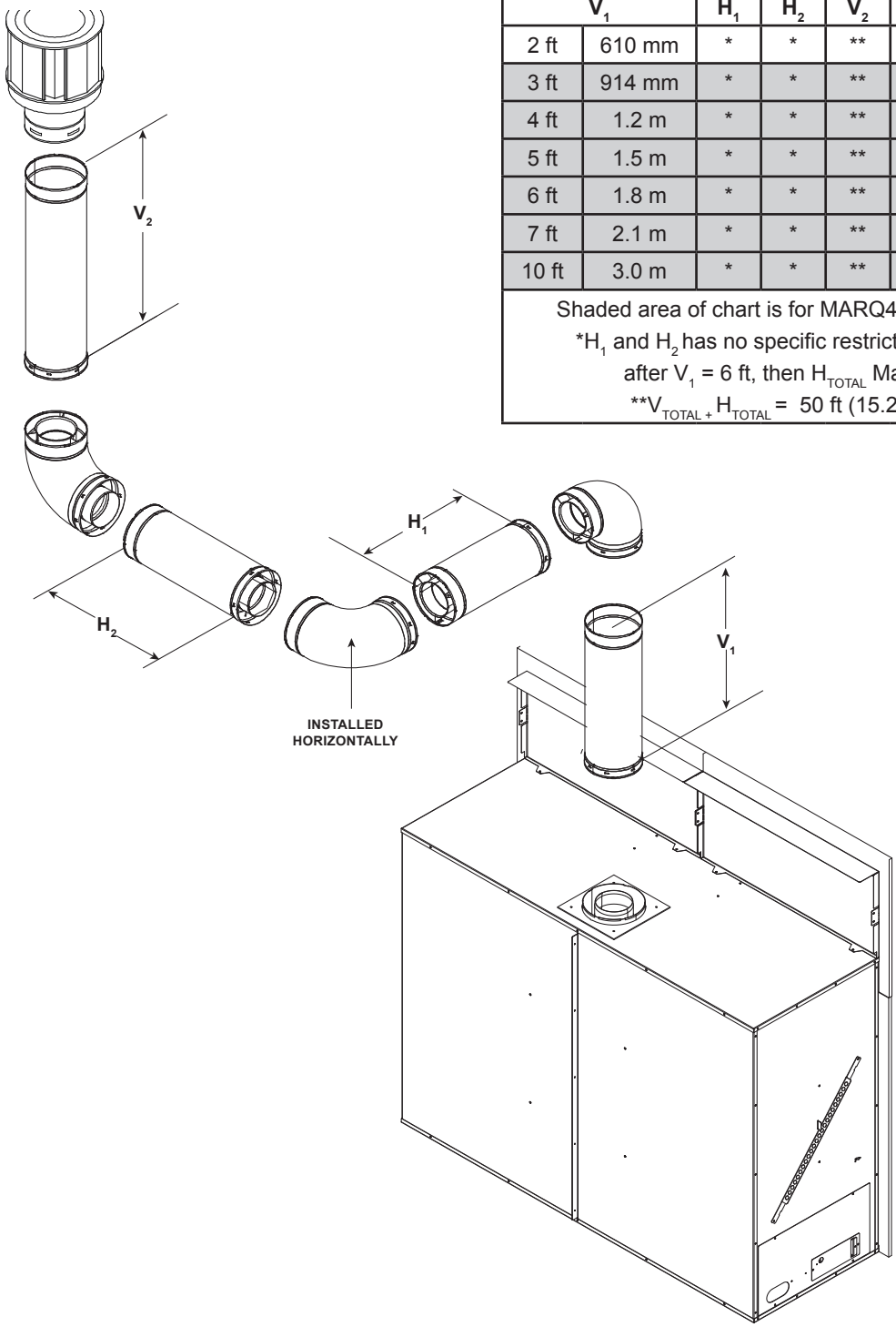

Figure 4.16

H. PVLP-SLP, PVI-SLP-B and PVV-SLP Information

This section provides specific detail for installation of MARQ36IN-B and MARQ42IN-B models with approved power vent kits. Follow instructions included with the PV-LP-SLP, PVI-SLP-B and PVV-SLP power vent kits.

See Table 4.1 below for approved Power Venting options for MARQUIS models.

WARNING! Risk of Fire! *Use ONLY Hearth & Home Technologies-approved power venting systems with this appliance. Use of power venting systems not approved by Hearth & Home Technologies may cause fireplace to overheat.*

	PVLP-SLP	PVI-SLP-B	PVV-SLP
MARQ36IN-B	APPROVED	APPROVED	APPROVED
MARQ42IN-B	APPROVED	APPROVED	APPROVED

Table 4.1

WARNING! Risk of Explosion! *Follow instructions to set draft flow. Incorrect setting may impair burner performance and/or cause delayed ignition.*

The power vent draft flow must be adjusted and set per the specifications in Table 4.2. Refer to the instructions provided with the PVLP-SLP and PVI-SLP-B for more specific information.

Setting the PVLP-SLP Baffle Adjustment:

Note: The air baffle may be adjusted after installation. The baffle adjustment screw can be accessed by removing the front cap cover.

- If the burner flames are short, active, and jumping, turn the bolt counterclockwise (open). Check the burner flames and adjust the baffle again as necessary until the flames are stable, strong, and steady.
- If the burner flames are tall, lifting, floating, and ghost-like, the baffle is too far open and MUST be closed. Turn bolt clockwise.
- If the pilot continuously sparks and does not become steady, the baffle may need to be opened. The requirements in Table 4.2. must still be met.

Distance from PVLP-SLP to Appliance	Allowable Baffle	
	Minimum	Maximum
2-15 ft.	1-1/2 in.	2-1/2 in.
16-39 ft.	Closed	1-1/2 in.
Greater than 40	Closed	

Table 4.2

PVI-SLP-B: The baffle adjustment is measured using the holes on the indicator bar of the PVI-SLP-B baffle. This bar raises as the baffle is opened and lowers as the baffle is closed. Adjust the baffle by turning the screw located in the motor enclosure. See Figure 4.17 and 4.18.

	PVI-SLP-B Baffle Adjustment Setting
MARQ36IN-B **MARQ42IN-B**	**3 Holes Visible**

Table 4.3

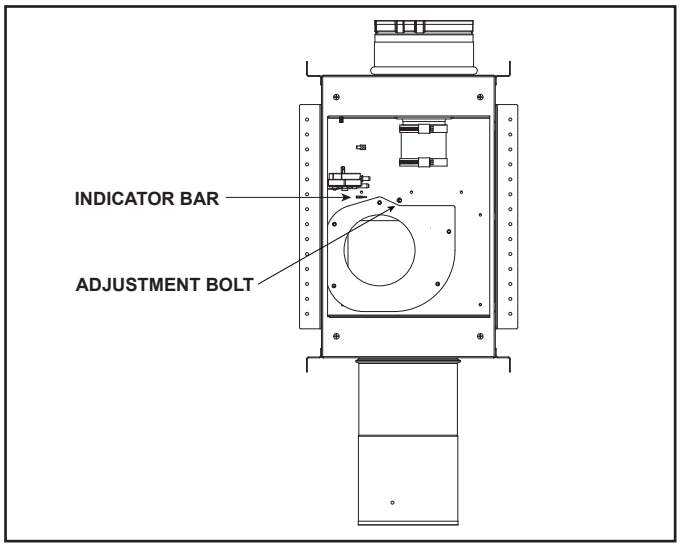

Figure 4.17 Baffle Adjustment Location - PVI-SLP-B

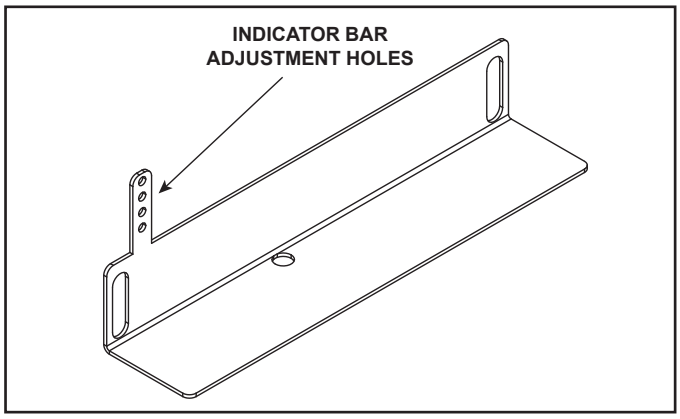

Figure 4.18 Baffle Adjustment - PVI-SLP-B

PVV-SLP: It may be necessary to add a flue restrictor to the appliance when using this powervent. Follow instructions included with the PVV-SLP powervent.

5 Vent Clearances and Framing

A. Pipe Clearances to Combustibles

WARNING! Risk of Fire! *Maintain air space clearance to vent.* ***DO NOT*** *pack insulation or other combustibles:*

- *Between ceiling firestops*
- *Between wall shield firestops*
- *Around vent system*

Failure to keep insulation or other material away from vent pipe may cause overheating and fire.

Note: Heat shields MUST overlap by a minimum of 1-1/2 in. (38 mm).
- **DVP heat shield** - designed to be used on a wall 4 in. to 7-1/4 in. (102 mm to 184 mm) thick.
- If wall thickness is less than 4 in. the existing heat shields must be field trimmed. If wall thickness is greater than 7-1/4 in. a DVP-HSM-B will be required.
- If wall thickness is less than 4-3/8 the existing heat shields must be field trimmed. If wall thickness is greater than 7-5/8 in. a DVP-HSM-B will be required.

(DVP Pipe Shown)

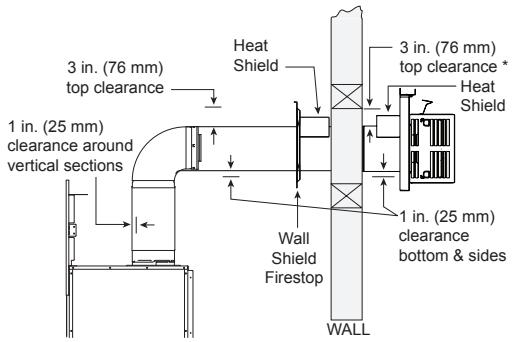

Figure 5.1 Horizontal Venting Clearances To Combustible Materials

B. Wall Penetration Framing/Firestops

Combustible Wall Penetration

Whenever a combustible wall is penetrated, you must frame a hole for the wall shield firestop(s). The wall shield firestop maintains minimum clearances and prevents cold air infiltration.

- The opening must be framed on all four sides using the same size framing materials as those used in the wall construction.
- DVP pipe - A wall shield firestop is required on one side only on interior walls. If your local inspector requires a wall shield firestop on both sides, then both wall shield firestops must have a heat shield (refer to Section 12.A.) attached to them.
- See Section 7.E. for information for regarding the installation of a horizontal termination cap.

Non-Combustible Wall Penetration

If the hole being penetrated is surrounded by non-combustible materials such as concrete, a hole with diameter one inch greater than the pipe is acceptable.

Whenever a non-combustible wall is penetrated, the wall shield firestop is only required on one side and no heat shield is necessary.

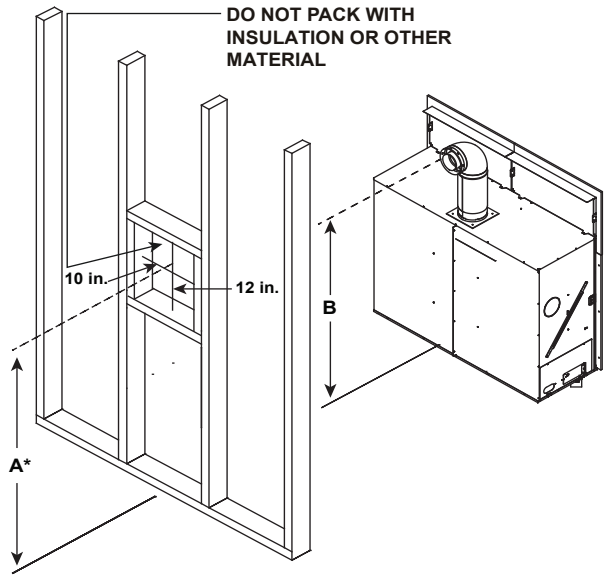

MODEL	A*	B
MARQ36IN-B NG/ Propane	74-3/16 in.	73-3/16 in.
MARQ42IN-B NG	79-3/16 in.	78-3/16 in.
MARQ42IN-B Propane	91-3/16 in.	90-3/16 in.

* Shows center of vent framing hole with minimum vertical for top venting. The center of the hole is one (1) in. (25 mm) above the center of the horizontal vent pipe.

Figure 5.2 Wall Penetration

C. Ceiling Firestop/Floor Penetration Framing

WARNING! Risk of Fire! DO NOT pack insulation around the vent. Maintain clearances to vent to prevent overheating.

A ceiling firestop **MUST** be used between floors and attics.

- **DVP pipe only** - Frame an opening 10 in. by 10 in. (254 mm by 254 mm) whenever the vent penetrates a ceiling/floor (see Figure 5.3).
- Frame the area with the same sized lumber as used in ceiling/floor joist.
- The ceiling firestop may be installed above or below the ceiling joists when installed with an attic insulation shield. It must be under joists between floors that are not insulated. Refer to Figure 5.4.
- Secure with three fasteners on each side.

WARNING! Risk of Fire! DO NOT pack insulation around the vent. Insulation must be kept back from the pipe to prevent overheating.

D. Install Attic Insulation Shield

WARNING! Fire Risk. *The use of an attic shield is required to prevent loose materials or insulation from contacting the vent causing overheating and a fire.*

The International Fuel Gas Code requires an attic shield constructed of 26 gauge minimum steel that extends at least 2 in. (51 mm) above insulation.

- Attic insulation shields must meet specified clearances to combustible materials and be secured in place.
- An attic insulation shield kit is available from Hearth & Home Technologies. Contact your dealer to order. Install attic insulation shield according to instructions included with kit.

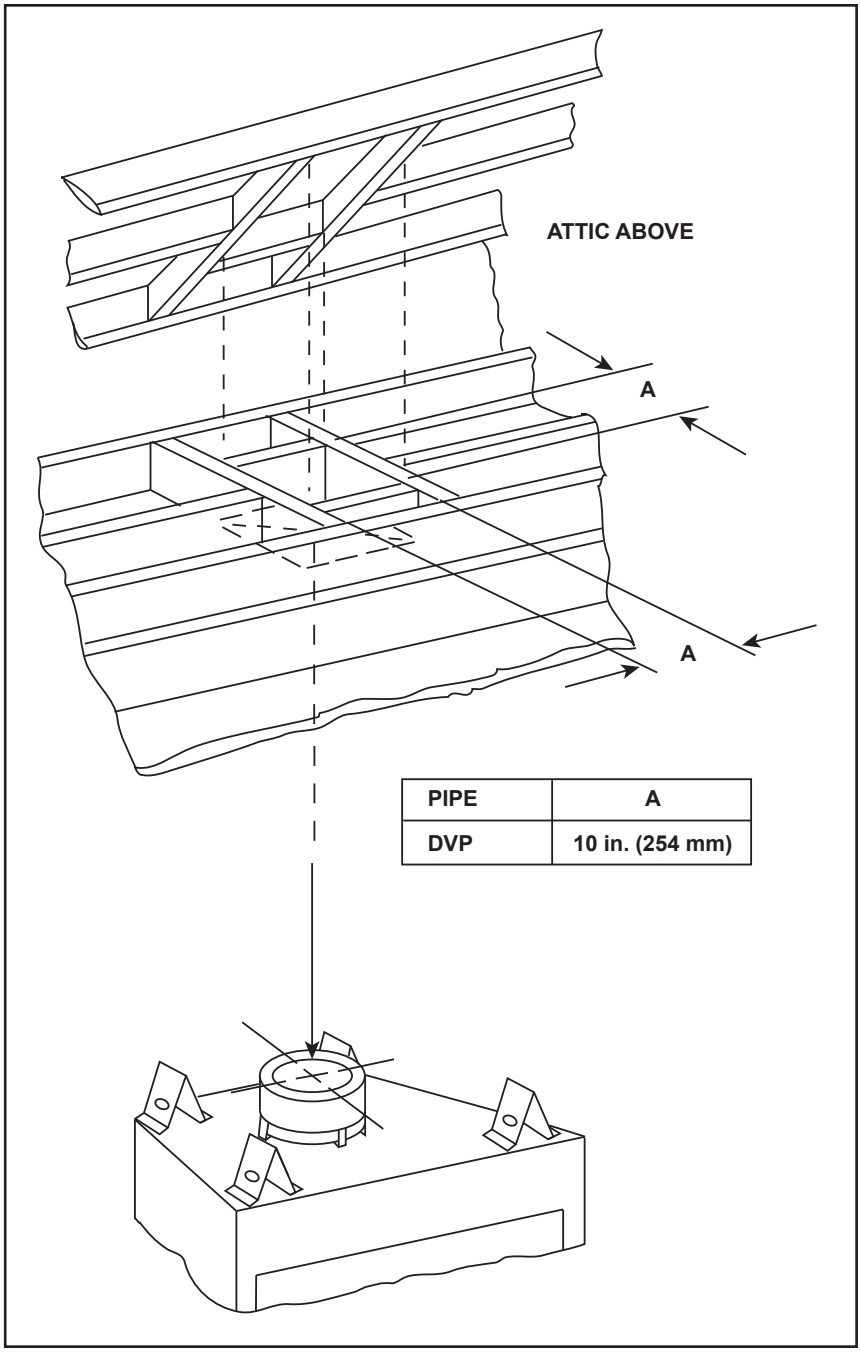

PIPE	A
DVP	10 in. (254 mm)

Figure 5.3 Installing Ceiling Firestop

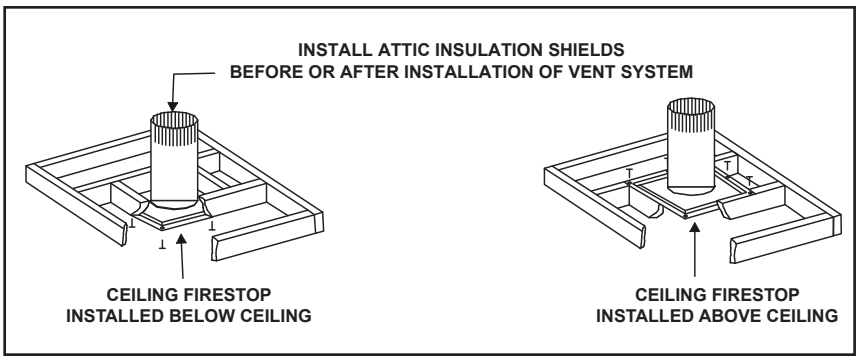

Figure 5.4 Installing the Attic Shield

E. Installing the Optional Heat Management

- Locate the knockouts on the left and right sides of the appliance. See Figure 5.5. Remove the knockouts from the appliance with a tin snips.
- Center the duct collar around the exposed hole and attach it to the appliance with 3 screws. Note: Do this BEFORE final positioning of the appliance.
- Determine the location for the air register/fan housing assembly.

Reference the appropriate instructions included with the kit for the remaining installation steps.

Note: Only one heat management kit may be used with this appliance, and be controlled through the IFT remote control. An additional heat managment kit may be added, however it is recommended to be wired through the appliance junction box. Reference the heat management instructions for installation.

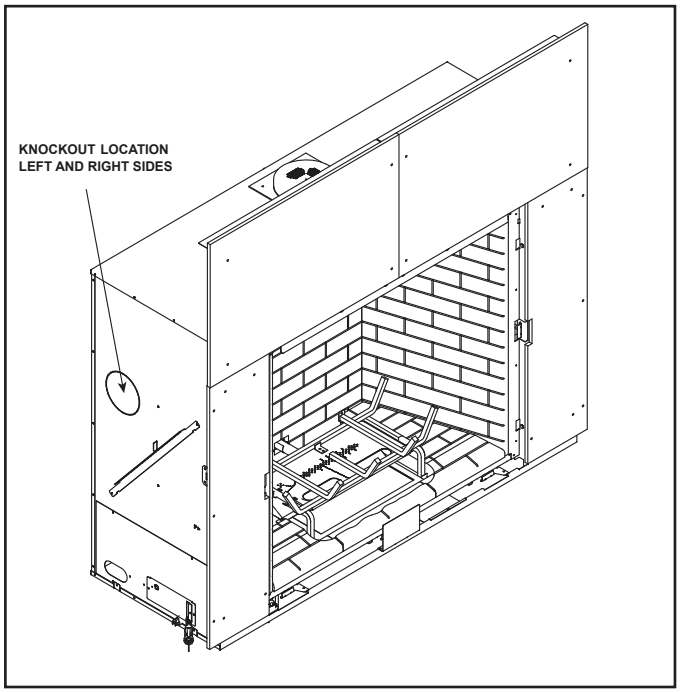

Figure 5.5 Knockout Cover Plate

6 Appliance Preparation

A. Vent Collar Preparation

CAUTION! Risk of Cuts, Abrasions or Flying Debris. *Wear protective gloves and safety glasses during installation. Sheet metal edges are sharp.*

NOTICE: *This appliance is top vented ONLY.*

1. Remove shrink wrap from appliance. Figure 6.1 shows the shipping location of the seal cap and heat shields (Section 6), splatter guard and finishing templates (Section 10), and the logs (Section 11).
2. Remove seal cap from top of appliance by removing one screw, which is included, to prevent construction material from getting into appliance. Remove seal cap when pipe installation phase begins. See Figure 6.2.
3. Ensure gasket seal is in place prior to installing vent pipe sections. Gasket is installed at the factory.

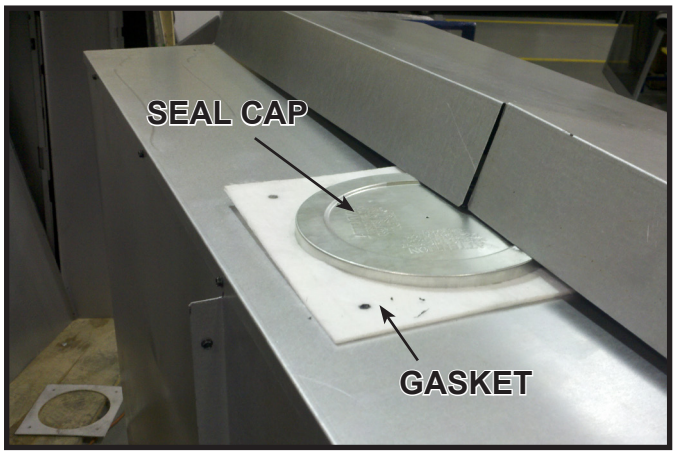

Figure 6.2 Seal Cap and Gasket Location

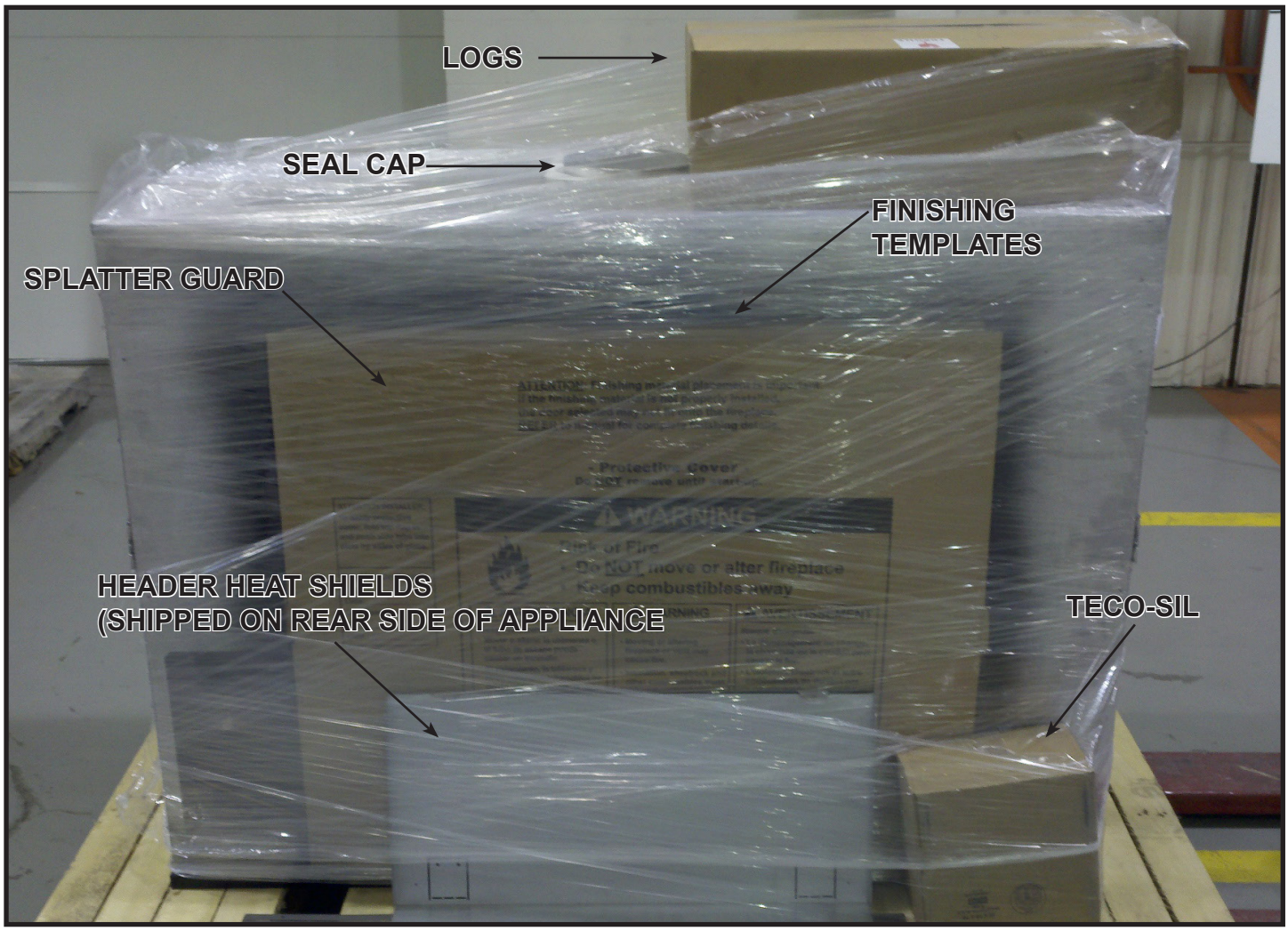

Figure 6.1 Shipping Location of Components

B. Securing and Leveling the Appliance

WARNING! Risk of Fire! *Prevent contact with:*

- *Sagging or loose insulation*
- *Insulation backing or plastic*
- *Framing and other combustible materials*

Block openings into the chase to prevent entry of blown-in insulation. Make sure insulation and other materials are secured.

DO NOT *notch the framing around the appliance standoffs.*

Failure to maintain air space clearance may cause overheating and fire.

Nailing tabs are provided on the appliance and on the heat shields to secure the appliance to the framing members. See Figure 6.3 and Figure 6.5 for location of nailing tabs in shipping position.

- Bend out side nailing tabs 90 degrees. See Figure 6.4.
- Place the appliance into position.
- Keep side nailing tabs flush with the framing.
- Level the appliance from side to side and front to back.
- Shim the appliance as necessary. It is acceptable to use wood shims underneath the appliance.
- Position and install heat shields by securing two screws in each heat shield. See Figure 6.1 for shipping location of heat shields. The heat shield screws can be found pre-installed on the top of the appliance.
- Bend the top header heat shields upward to position them vertically and bend out the two nailing tabs on the top of each header heat shield. Secure to framing. See Figure 6.5.
- Secure the appliance to the framing by using nails or screws through the nailing tabs.
- Secure the appliance to the floor by inserting two screws through the pilot holes at the bottom of the appliance.

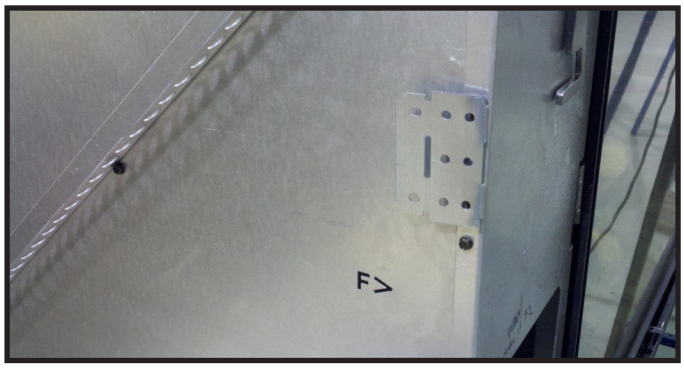

Figure 6.3 Side Nailing Tab in Shipping Position

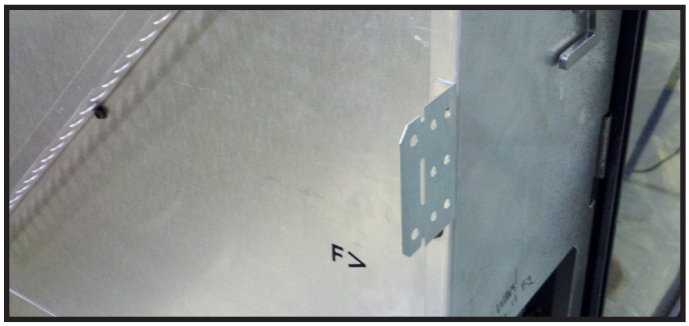

Figure 6.4 Nailing Tab Bent Out for Installation

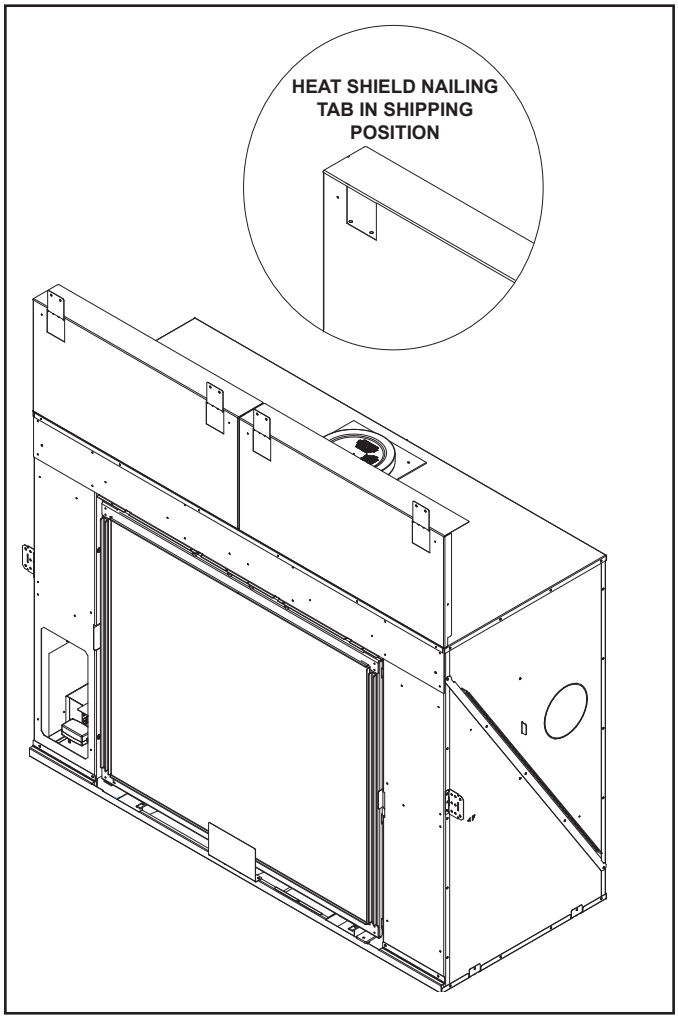

Figure 6.5. Heat Shields and Nailing Tabs in Installation Position

C. Installing Non-Combustible Facing Material

WARNING! Risk of Fire!

- *Follow these instructions exactly.*
- *Facing materials must be installed properly to prevent fire.*
- *No materials may be substituted without authorization by Hearth & Home Technologies.*

- The finishing templates are shipped fastened to the top surround. Remove finishing templates prior to installing non-combustible board.
- Remove non-combustible facing pieces from back of appliance. See Figure 6.6.
- Install non-combustible facing material to the appliance using the screws supplied in the manual bag assembly.
- Center and attach two top boards to the framing members. See Figure 6.7.
- Attach left and right side pieces to framing members.
- Use fasteners from fastener packet (in manual bag) for screws that secure to the fireplace. See Figure 6.7.
- Use regular sheetrock screws or nails to secure the perimeter of the non-combustible facing materials to the wood framing. See Figure 6.7.
- Use a wet or dry towel or soft brush to remove dust or dirt from facing material.
- See Section 10 for finishing materials guidelines.

Figure 6.6 Shipping Location of Non-Combustible Board

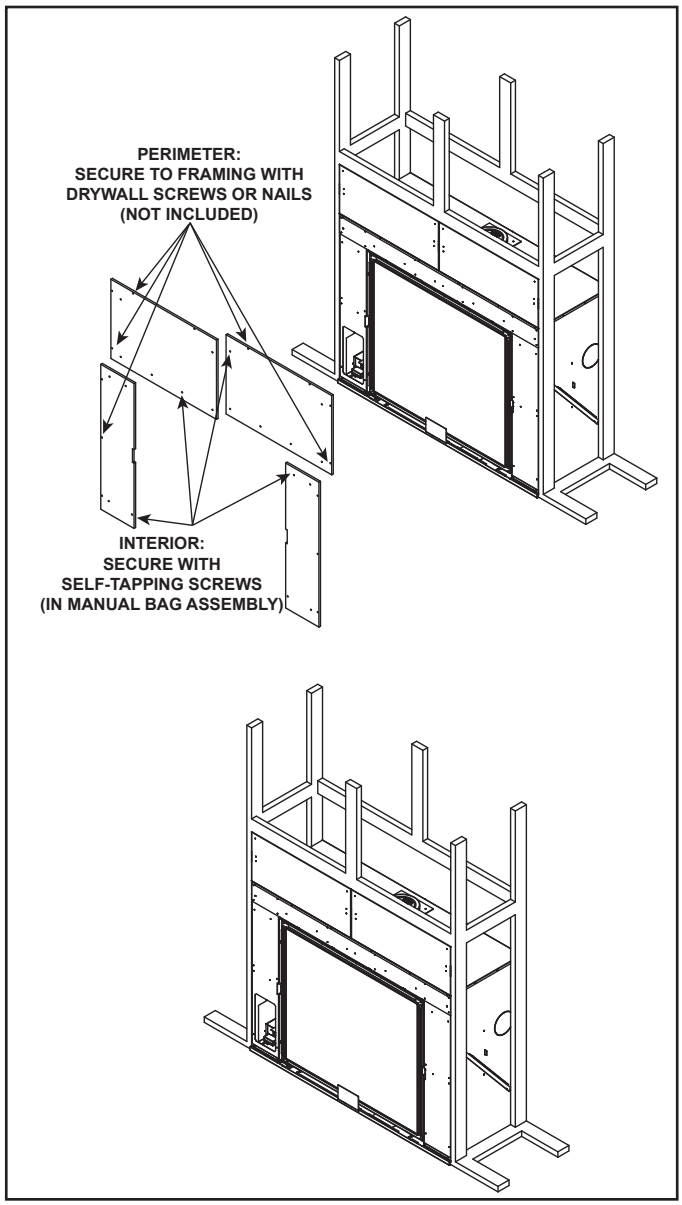

Figure 6.7 Installing Non-Combustible Facing Material

7 Venting and Chimneys

A. Assemble Vent Sections (DVP Pipe Only)

WARNING! Risk of Fire or Explosion! *Vent sections MUST be installed correctly. Improperly installed vent sections could leak or cause appliance to overheat.*

Attach Vent to the Firebox Assembly

Note: The end of the pipe sections with the lanced tabs will face toward the appliance.

Attach the first pipe section to the starting collar:

- Lanced pipe end of the starting collar.
- Inner pipe over inner collar.
- Push the pipe section until all lanced tabs snap in place.
- Lightly tug on pipe to confirm it has locked.

Requirement for Commercial, Multi-family (Multi-level exceeding two stories), or High-Rise Applications

WARNING! Risk of Fire or Explosion! DO NOT *break silicone seals on slip sections. Use care when removing termination cap from slip pipe. If slip section seals are broken during removal of the termination cap, vent could leak.*

All outer pipe joints must be sealed using one of the methods below, including the slip section that connects directly to the horizontal termination cap.

- Apply a bead of silicone sealant (300 ºF minimum continuous exposure rating) inside the female outer pipe joint prior to joining sections. See Figure 7.1 **OR**

  Apply a bead of silicone sealant (300 ºF minimum continuous exposure rating) to the outside of connecting joint after joining sections **OR**

  Apply aluminum foil tape (300 ºF minimum continuous exposure rating) to the outside of connecting joint after joining sections. On horizontal pipe runs, it is recommended that the tape seam is positioned on the bottom side of the vent pipe.
- Only outer pipes need to be sealed. All unit collar, pipe, slip section, elbow and cap outer flues shall be sealed in this manner, unless otherwise stated.

Assemble Pipe Sections

Per Figure 7.2:

- Start the inner pipe on the lanced end of section A into the flared end of section B.
- Start the outer pipe of section A over the outer pipe of section B.
- Once both vents sections are started, push firmly until all lanced tabs lock into place.
- Lightly tug on the pipe to confirm the tabs have locked.

It is acceptable to use screws no longer than 1/2 in. (13 mm) to hold outer pipe sections together. If predrilling holes, **DO NOT** penetrate inner pipe.

For 90º and 45º elbows that are changing the vent direction from horizontal to vertical, one screw minimum should be put in the outer flue at the horizontal elbow joint to prevent the elbow from rotating. Use screws no longer than 1/2 in. (13 mm). If predrilling screw holes, **DO NOT** penetrate inner pipe.

Figure 7.1 High Temperature Silicone Sealant

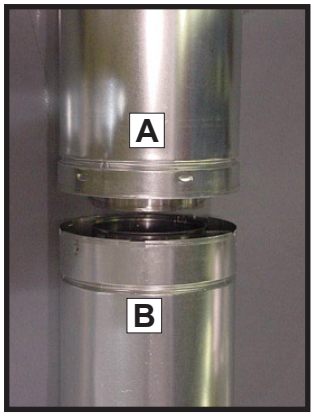

Figure 7.2

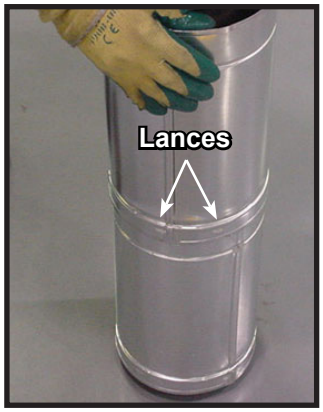

Figure 7.3

Note: Make sure that the seams are not aligned to prevent unintentional disconnection.

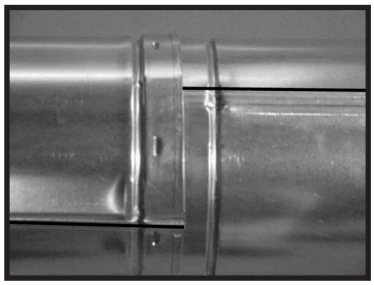

CORRECT

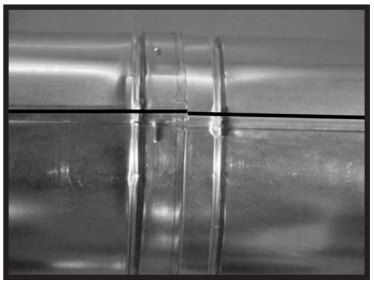

INCORRECT

Figure 7.4 Seams

NOTICE: *When installing a vent system with an HRC termination cap, all pipe system joints shall be sealed using a high temperature silicone sealant (300 °F minimum continuous exposure rating).*

- *Apply a bead of silicone sealant (300 °F minimum continuous exposure rating) inside the female outer pipe joint prior to joining sections.*
- *Only outer pipes are sealed, sealing the inner flue is not required.*
- *All unit collar, pipe, slip section, elbow and cap outer flues shall be sealed.*

B. Assemble Slip Sections

- Slide the inner flue of the slip section into the inner flue of the pipe section and the outer flue of the slip section over the outer flue of the pipe section. See Figure 7.5.
- Slide together to the desired length.

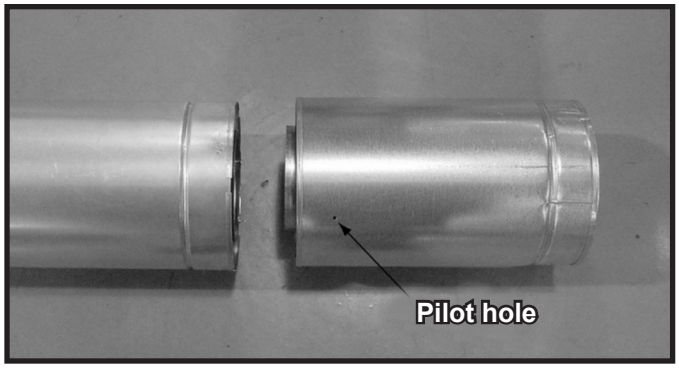

Figure 7.5 Slip Section Pilot Holes

- Maintain a 1-1/2 in. (38 mm) overlap between the slip section and the pipe section.
- Secure the pipe and slip section with two screws no longer than 1/2 in. (13 mm), using the pilot holes in the slip section. See Figure 7.6.

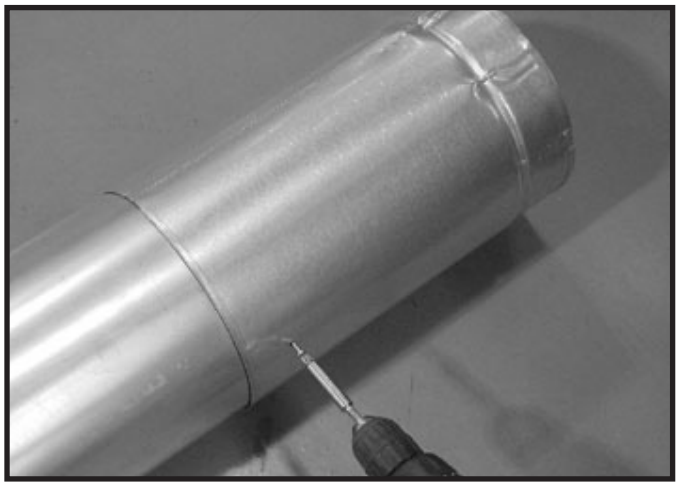

Figure 7.6 Screws into Slip Section

- Continue adding pipe as necessary following instructions in “Assembling Pipe Sections.”

NOTICE: *If slip section is too long, the inner and outer flues of the slip section can be cut to the desired length.*

C. Secure the Vent Sections

- Vertical runs originating off the top of the appliance, with no offsets, must be supported every 8 ft. (2.44 m) after the maximum allowed 25 ft. (7.62 m) of unsupported rise.
- Vertical runs originating off the rear of the appliance, or after any elbow, must be supported every 8 ft. (2.44 m).
- Horizontal runs must be supported every 5 feet (1.52 m).
- Vent supports or plumbers strap (spaced 120º apart) may be used to support vent sections. See Figures 7.7 and 7.8.
- Wall shield firestops may be used to provide horizontal support to vent sections.
- SLP ceiling firestops have tabs that may be used to provide vertical support.

WARNING! Risk of Fire, Explosion or Asphyxiation! *Improper support may allow vent to sag and separate. Use vent run supports and connect vent sections per installation instructions.* ***DO NOT*** *allow vent to sag below connection point to appliance.*

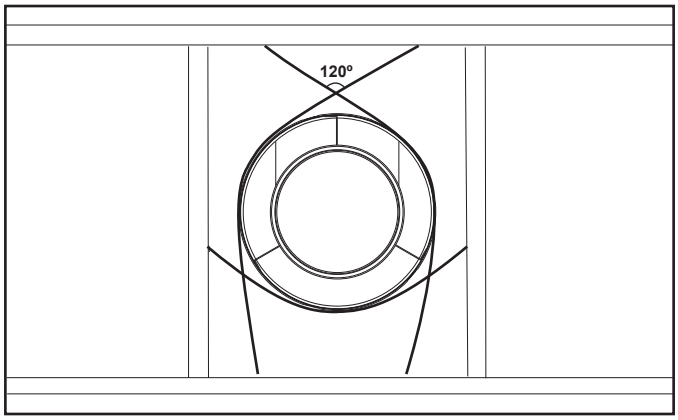

Figure 7.7 Securing Vertical Pipe Sections

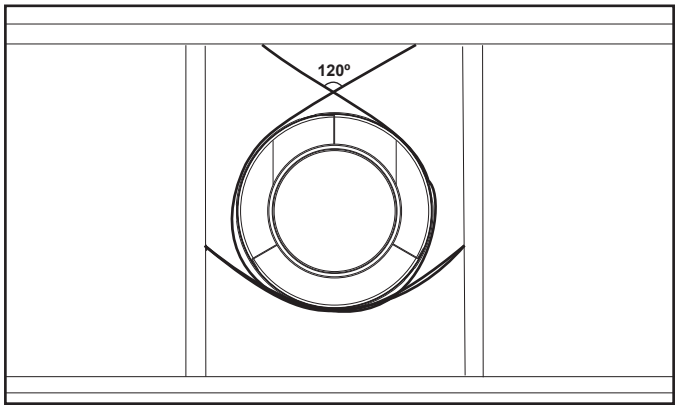

Figure 7.8 Securing Horizontal Pipe Sections

D. Disassemble Vent Sections

- Rotate either section (see Figure 7.9) so the seams on both pipe sections are aligned as shown in Figure 7.10.
- Pull carefully to separate the pieces of pipe.

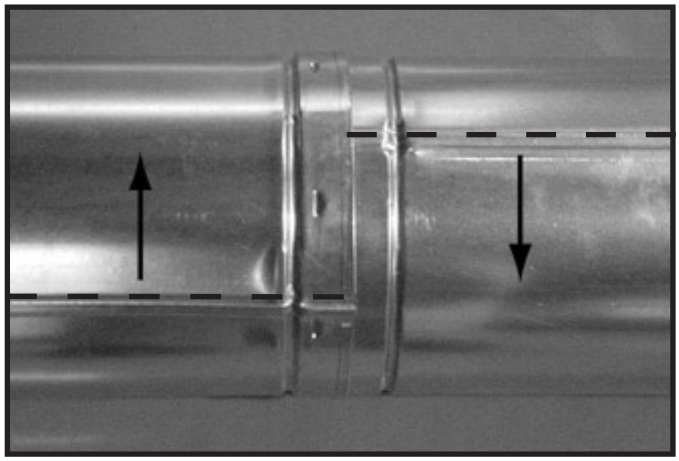

Figure 7.9 Rotate Seams for Disassembly

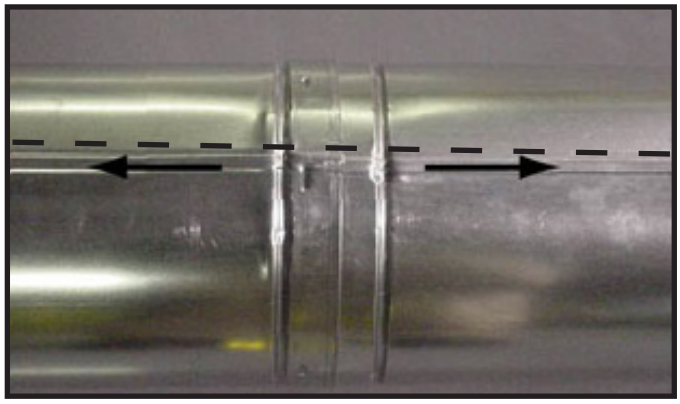

Figure 7.10 Align and Disassemble Vent Sections

E. Vertical Termination Requirements

Install and Seal Metal Roof Flashing

- See minimum vent heights for various pitched roofs (Section 4, Figure 4.1) to determine the length of pipe to extend through the roof.
- Slide the roof flashing over the pipe sections extending through the roof as shown in Figure 7.11.
- Use an elastomeric or silicone sealant with a minimum of 150 ºF temperature rating to seal the metal roof flashing.

➔ **Note:** When installing a silicone or EPDM pipe flashing boot on a metal roof, it is recommended to put a bead of 100% silicone sealant where the boot contacts the vent pipe to prevent the entry of water. Follow the manufacturer's recommendations when installing the boot.

NOTICE: *Failure to properly seal the roof flashing and pipe seams could permit entry of water.*

- Seal the gap between the roof flashing and the outside diameter of the pipe.
- Seal the perimeter of the flashing where it contacts the roof surface. See Figure 7.11.
- Seal the exposed pipe section seams that are located above the roof.

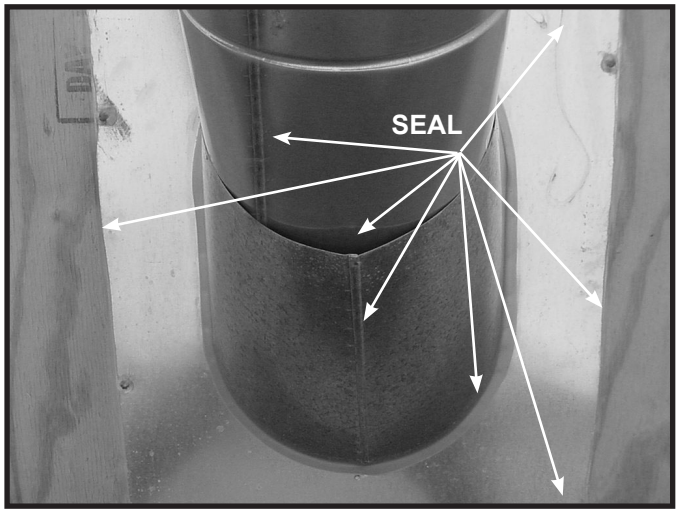

Figure 7.11

Assemble and Install Storm Collar

CAUTION! Risk of Cuts, Abrasions or Flying Debris. *Wear protective gloves and safety glasses during installation. Sheet metal edges are sharp.*

- Slide the storm collar onto the exposed pipe section and align brackets.
- Insert a bolt (provided) through the brackets and install nut. Do not completely tighten.

Figure 7.12 Insert Bolt into Brackets

- Slide the assembled storm collar down the pipe section until it rests on the roof flashing. See Figure 7.12.
- Tighten nut and make sure the collar is tight against the pipe section.
- Seal around the top of the storm collar. See Figure 7.13.

Install Vertical Termination Cap

- Attach the vertical termination cap by sliding the inner collar of the cap into the inner flue of the pipe section while placing the outer collar of the cap over the outer flue of the pipe section.
- Secure the cap by driving three self-tapping screws (supplied) through the pilot holes in the outer collar of the cap into the outer flue of the pipe. See Figure 7.13.

Figure 7.13

F. Horizontal Termination Requirements

Heat Shield Requirements for Horizontal Termination

WARNING! Risk of Fire! *To prevent overheating and fire, heat shields must extend through the entire wall thickness.*

- ***DO NOT*** *remove the heat shields attached to the wall shield firestop and the horizontal termination cap (shown in Figure 7.14).*
- *Heat shields must overlap 1-1/2 in. (38 mm) minimum.*

There are two sections of the heat shield. One section is factory-attached to the wall shield firestop. The other section is factory-attached to the cap. See Figure 7.16.

If the wall thickness does not allow the required 1-1/2 in. (38 mm) heat shield overlap when installed, an extended heat shield must be used.

- If the wall thickness is less than 4 in./102 mm (DVP) or 4-3/8 in./ 111 mm (SLP), the heat shields on the cap and wall shield firestop must be trimmed. A minimum 1-1/2 in. (38 mm) overlap MUST be maintained.
- Use an extended heat shield if the finished wall thickness is greater than 7-1/4 in. (184 mm).
- The extended heat shield may need to be cut to length maintaining sufficient length for a 1-1/2 in. (38 mm) overlap between heat shields.
- Attach the extended heat shield to either of the existing heat shields using the screws supplied with the extended heat shield. Refer to vent components diagrams in the back of this manual.
- Rest the small leg on the extended heat shield on top of the pipe section to properly space it from the pipe section.

Important Notice: Heat shields may not be field constructed.

Figure 7.13 Venting through the wall

Install Horizontal Termination Cap

WARNING! Risk of Fire! *The telescoping flue section of the termination cap MUST be used when connecting vent.*

- *1-1/2 (38 mm) minimum overlap of flue telescoping section is required.*

Failure to maintain overlap may cause overheating and fire.

- Vent termination must not be recessed in the wall. Siding may be brought to the edge of the cap base.
- Flash and seal as appropriate for siding material at outside edges of cap.
- When installing a horizontal termination cap, follow the cap location guidelines as prescribed by current **ANSI Z223.1** and **CAN/CGA-B149** installation codes and refer to Section 4 of this manual.

CAUTION! Risk of Burns! *Local codes may require installation of a cap shield to prevent anything or anyone from touching the hot cap.*

NOTICE: *For certain exposures which require superior resistance to wind-driven rain penetration, a flashing kit and HRC caps are available. When penetrating a brick wall, a brick extension kit is available for framing the brick.*

Note: When using termination caps with factory-supplied heat shield attached, no additional wall shield firestop is required on the exterior side of a combustible wall.

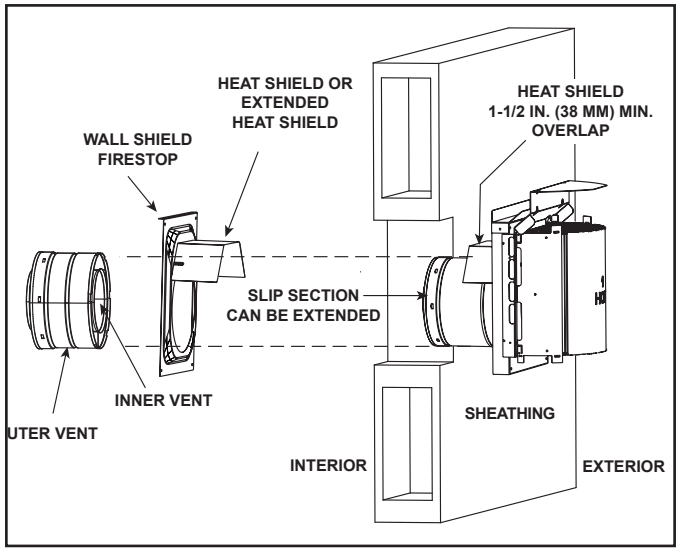

Figure 7.14 Venting Through the Wall

8 Electrical Information

A. General Information

WARNING! Risk of Shock! DO NOT *wire 110-120 VAC to the valve or to the appliance wall switch. Incorrect wiring will damage controls.*

NOTICE: *This appliance must be electrically wired and grounded in accordance with local codes or, in the absence of local codes, with* **National Electric Code ANSI/NFPA 70-latest edition** *or the* **Canadian Electric Code CSA C22.1.**

- Wire the appliance circuit using a minimum 14-2 AWG with ground to unswitched 110-120 VAC. This is required for proper operation of the appliance.
- A 110-120 VAC circuit for this product must be protected with ground-fault circuit-interrupter protection, in compliance with the applicable electrical codes, when it is installed in locations such as in bathrooms or near sinks.
- Low voltage and 110-120 VAC voltage cannot be shared within the same wall box.

Junction Box Installation

The electrical junction box can be accessed three ways during installation:

1. Through the side electrical access:
   - Remove two screws to release junction box bracket from the access plate. See Figure 3.2 and Figure 8.2.
2. Through the front left column (behind the factory-installed non-combustible board):
   - From inside remove one screw that secures junction box to junction box bracket. See Figure 8.1 and Figure 8.2.
3. Through the firebox:
   - From inside remove one screw that secures junction box to junction box bracket. See Figure 8.1 and Figure 8.2.

- Pull the electrical wires from outside the appliance through the opening into the valve compartment and secure wires with a Romex connector. See Figure 8.2
- Make all necessary wire connections to the junction box/receptacle and reattach the junction box/receptacle to the outer shell.

ACCESS THROUGH LEFT COLUMN
(Prior to installation of non-combustible board)

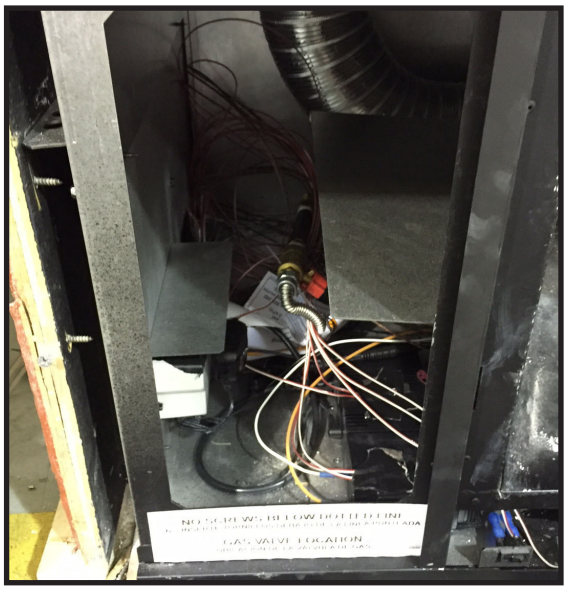

ACCESS THROUGH FIREBOX
(After installation of non-combustible board)

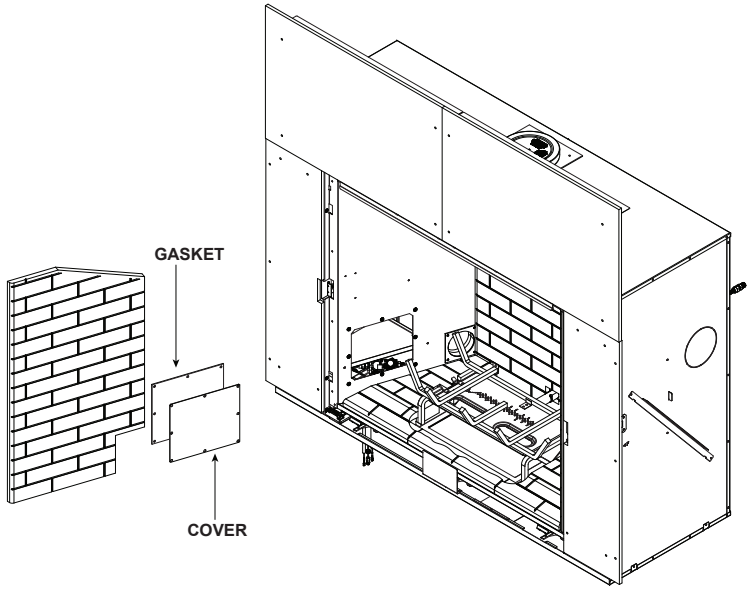

Figure 8.1 Junction Box Access

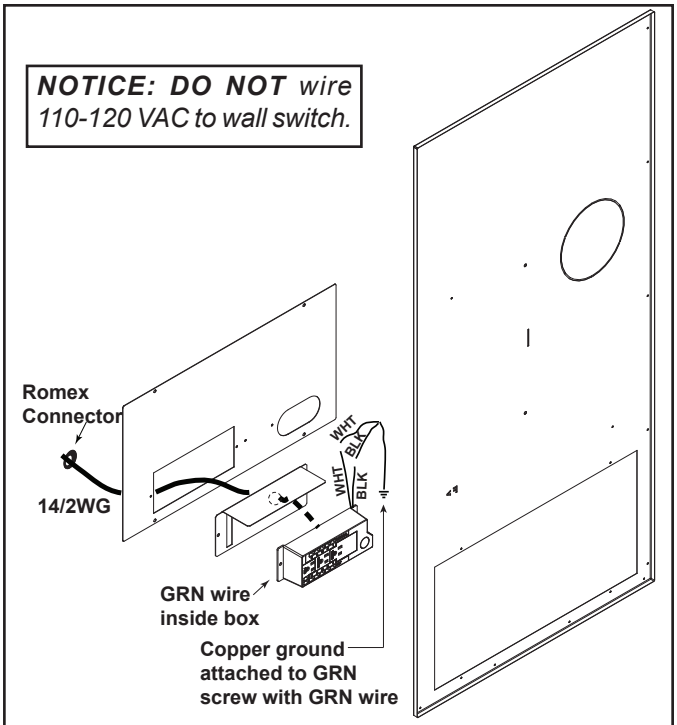

Figure 8.2 Junction Box Detail

Accessories Requirements

- This appliance may be used with a wall switch, wall mounted thermostat and/or a remote control.

Wiring for optional Hearth & Home Technologies approved accessories should be done now to avoid reconstruction. Follow instructions that come with those accessories.

- Hearth & Home Technologies recommends that IntelliFire™ Touch wireless controls be used for their features and functionality with the IntelliFire™ Touch ignition system.

Electrical Service and Repair

WARNING! Risk of Shock! *Label all wires prior to disconnection when servicing controls. Wiring errors can cause improper and dangerous operation. Verify proper operation after servicing.*

WARNING! Risk of Shock! *Replace damaged wire with type 105º C rated wire. Wire must have high temperature insulation.*

B. Wiring Requirements

IntelliFire Touch® Ignition System Wiring

- Wire the appliance junction box to 110-120 VAC for proper operation of the appliance.

***WARNING! Risk of Shock or Explosion! DO NOT** wire IFT controlled appliance junction box to a switched circuit. Incorrect wiring will override IFT safety lockout.*

- Refer to Figure 8.3 or 8.4, IFT Wiring Diagram.
- This appliance is equipped with an IntelliFire Touch control valve which operates on a 6 volt/1.5 AMP system.
- Plug the 6 volt transformer plug into the appliance junction box to supply power to the unit OR install 4 AA cell batteries (not included) into the battery pack before use.

***NOTICE:** Batteries should only be used as a power source in the event of an emergency power outage. Batteries should not be used as a primary long-term power source. Battery polarity must be correct when installing batteries. When using batteries as a power source, the 6-volt transformer must be unplugged from the receptacle.*

Do not store batteries in the battery pack when the appliance is powered by the 6 volt transformer connected to permanent electrical service.

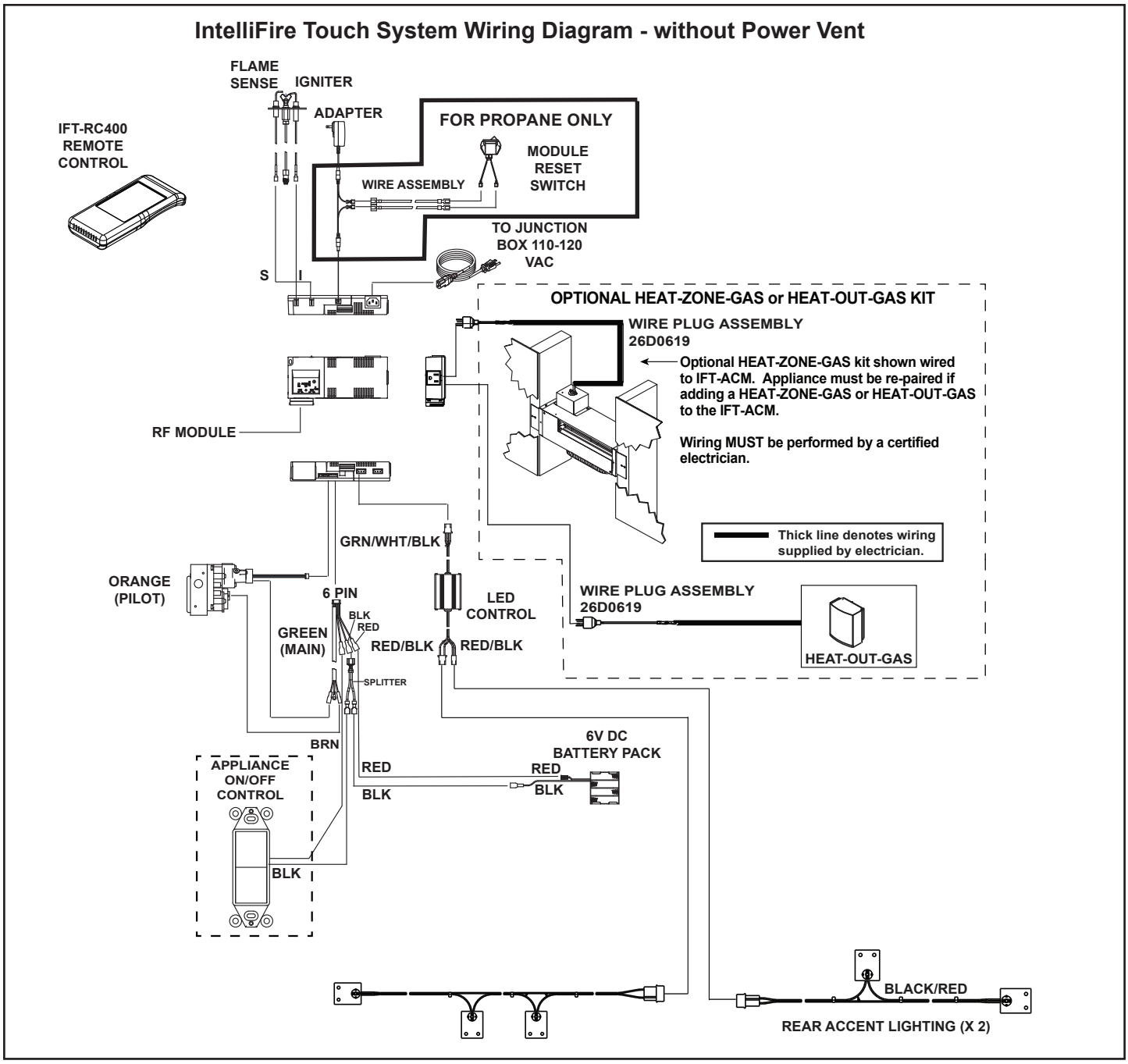

Figure 8.3 IFT Wiring Diagram without Power Vent

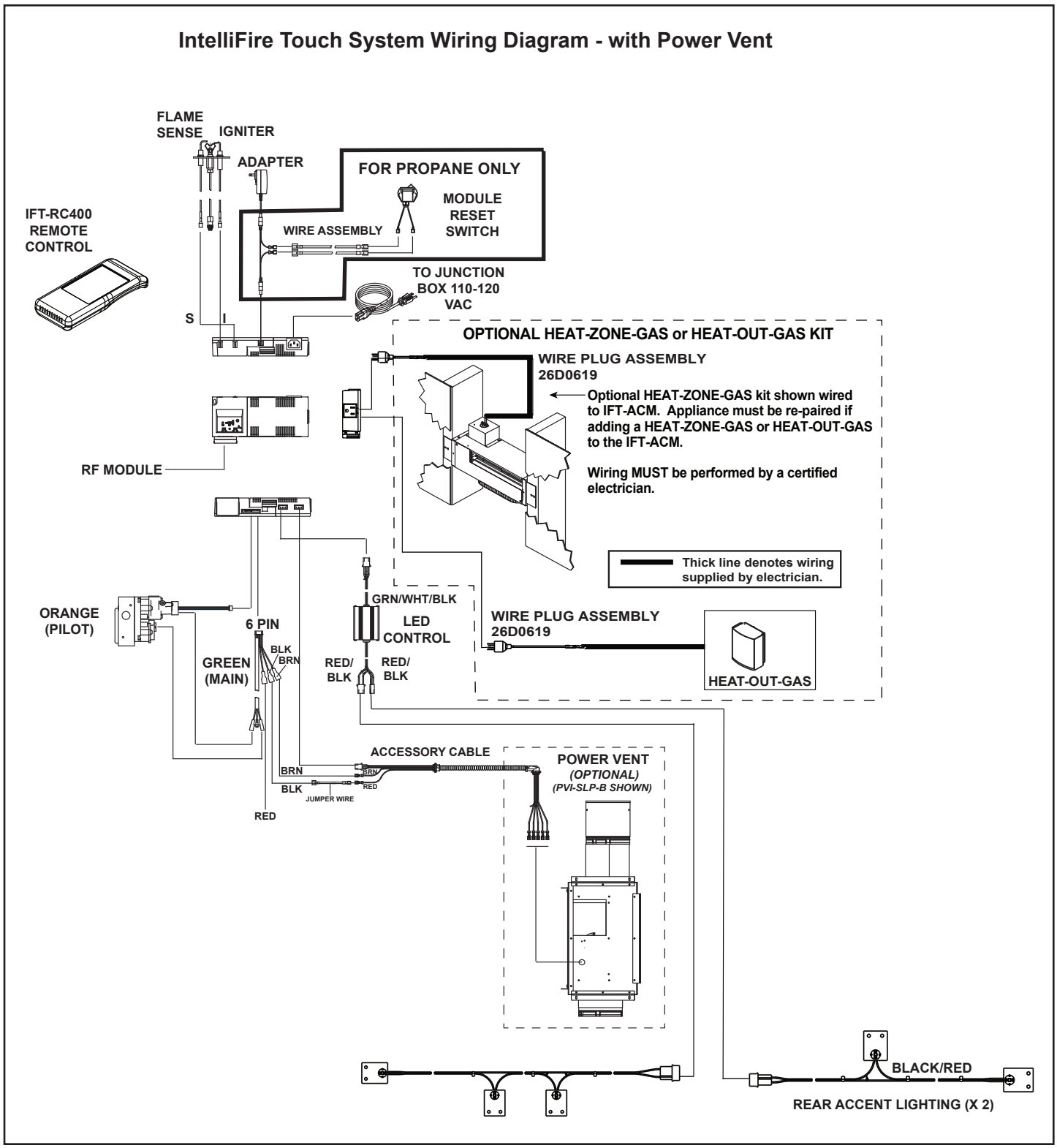

Figure 8.4 IFT Wiring Diagram with Power Vent

9 Gas Information

A. Fuel Conversion

- Make sure the appliance is compatible with available gas types.
- Conversions must be made by a qualified service technician using Hearth & Home Technologies specified and approved parts.

B. Gas Pressure

⚠ WARNING

Fire Risk.

Risk of Fire! Risk of Explosion!

Incorrect pressure will damage valve.

- Isolate gas supply piping BEFORE pressure testing gas line at test pressures above 1/2 psig.
- Close the manual shutoff valve BEFORE pressure testing gas line at test pressures equal to or less than 1/2 psig.

- Optimum appliance performance requires proper input pressures.
- Gas line sizing requirements will be determined in ANSI Z223.1 National Fuel Gas Code in the USA and CAN/CGA B149 in Canada.
- Pressure requirements when in operation are:

Gas Pressure	Natural Gas	Propane
Minimum inlet pressure	5.0 in. w.c.	11.0 in. w.c.
Maximum inlet pressure	10.0 in. w.c.	13.0 in. w.c.
Manifold pressure	3.5 in. w.c.	10.0 in. w.c.

- Verify inlet pressures. Verify minimum pressures when other household gas appliances are operating.
- Install regulator upstream of valve if line pressure is greater than 1/2 psig.

Note: Have the gas supply line installed in accordance with local codes, if any. If not, follow ANSI Z223.1. Installation should be done by a qualified installer approved and/or licensed as required by the locality. (In the Commonwealth of Massachusetts installation must be performed by a licensed plumber or gas fitter).

Note: A listed (and Commonwealth of Massachusetts approved) 1/2 in. (13 mm) T-handle manual shut-off valve and flexible gas connector are connected to the 1/2 in. (13 mm) control valve inlet.

- **If substituting for these components, please consult local codes for compliance.**

C. Gas Connection

- Refer to Section 3 for location of gas line access in appliance.
- Gas line may be run through knockout(s) provided.
- The gap between supply piping and gas access hole may be sealed with caulk or aluminum foil tape with a minimum of 300 ºF continuous exposure rating or stuffed with non-combustible, unfaced insulation to prevent cold air infiltration.
- Ensure that gas line does not come in contact with outer wrap of the appliance. Follow local codes.
- Pipe incoming gas line into valve compartment.
- Connect incoming gas line to the 1/2 in. (13 mm) NPT connection on manual shutoff valve.

WARNING! Risk of Fire or Explosion! *Support control when attaching pipe to prevent bending gas line.*

WARNING! Risk of Fire or Explosion! *Gas build-up during line purge could ignite.*

- A small amount of air will be in the gas supply lines.
- *Ensure adequate ventilation.*
- *Ensure there are no ignition sources such as sparks or open flames.*

Light the appliance. It will take a short time for air to purge from lines. When purging is complete the appliance will light and operate normally.

WARNING! Risk of Fire, Explosion or Asphyxiation! *Check all fittings and connections with a non-corrosive commercially available leak-check solution.* ***DO NOT*** *use open flame. Fittings and connections could have loosened during shipping and handling.*

D. High Altitude Installations

NOTICE: *If the heating value of the gas has been reduced, these rules do not apply. Check with your local gas utility or authorities having jurisdiction.*

When installing above 2000 feet elevation:

- In the USA: Reduce input rate 4% for each 1000 feet above 2000 feet.
- In CANADA: Input ratings are certified without a reduction of input rate for elevations up to 4500 feet (1370 m)above sea level. Please consult provincial and/or local authorities having jurisdiction for installations at elevations above 4500 feet (1370 m).

Check with your local gas utility to determine proper orifice size.

E. Air Shutter Setting

***WARNING!** Risk of Explosion or Delayed Ignition! Improperly adjusted air shutter could cause soot buildup.*

Air shutter settings should be adjusted by a qualified service technician at the time of installation. The air shutter is pre-set at the factory for minimum vertical, maximum horizontal vent run for this appliance: 2 ft. vertical and 7 in. horizontal (MARQ36IN-B) and 3 ft. vertical and 10 in. horizontal (MARQ42IN-B).

Factory Pre-Set Air Shutter Settings

MODEL	NG	Propane
MARQ36IN-B	3/8 in.	Full Open
MARQ42IN-B	3/4 in.	3/4 in.

Natural Gas (NG) installations:

As a general rule, it is acceptable to reduce the shutter opening to adjust for vertical vent pipe sections prior to the initial fire up.

- Vertical Termination: May reduce shutter setting by 1/8 in.
- Horizontal Termination (more than 4 ft. vertical in vent configuration): May reduce shutter setting by 1/8 in.
- Horizontal Termination (less than 4 ft vertical in vent configuration): May reduce shutter setting by 1/16 in.

Propane installations

- It is recommended that the air shutter on propane appliances remain at full open position.

Air Shutter Adjustment

Adjustment can be made to the air shutter with or without the logs installed with a ¼ in. nut driver. See Figure 9.1.

Figure 9.1. Air Shutter Location

To adjust air shutter:

- Loosen the screw on the burner assembly.
- To close the air shutter, turn shutter clockwise.
- To open air shutter, turn shutter counterclockwise.
- Tighten the screw.

***NOTICE:** Flames should not appear orange or stretch to the top refractory. If sooting occurs, provide more air by opening the air shutter.*

Shutter Setting Verification / Flame Appearance

- After 15 minutes, the flames will be a yellow/blue mix. The front flames may be blue at this time.
- After 30 minutes, the flames should be yellow with some blue flames near the burner ports.
- After 1 hour, the flame will be at is maximum maturity.

Note: Visually, a propane flame may differ from a natural gas flame. This is due to the different chemical compositions that make up both fuel types. In general, the Propane flames may be a little shorter and much brighter than a natural gas flame.

10 Finishing

A. Facing Material

⚠ WARNING

Risk of Fire!

DO NOT *apply combustible materials beyond the minimum clearances. Comply with all minimum clearances to combustibles as specified in this manual. Materials overlapping into non-combustible zones could ignite and will interfere with air flow through decorative barrier fronts.*

- Metal front of appliance may be covered with non-combustible materials only.
- Facing and/or finishing materials must not interfere with air flow through decorative barrier fronts, removal of decorative barrier fronts or access for service.
- Facing and/or finishing materials must never overhang into the glass opening.
- Observe all clearances when applying combustible materials.
- Seal gaps between the finished wall and appliance top and sides using a 300 ºF minimum sealant. Refer to Figure 10.1.

NOTICE: *Surface temperatures around the appliance will become warm while the appliance is in operation. Ensure finishing materials used for all surfaces (floor, walls, mantels, etc.) will withstand temperatures up to 190°F. If using vinyl flooring, refer to Section 3.E.*

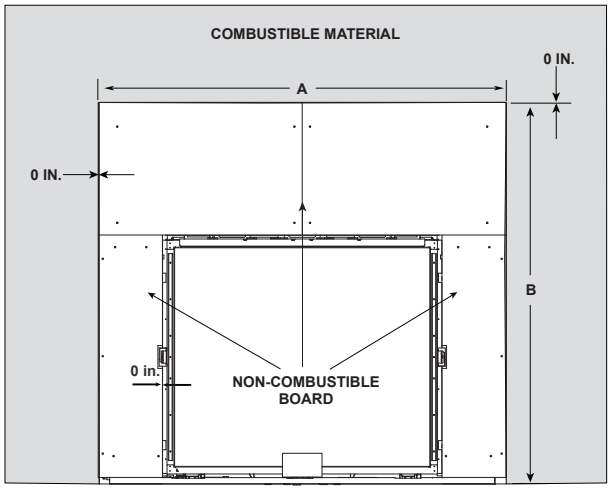

MODEL	A		B	
	in.	mm	in.	mm
MARQ36IN-B	61	1549	57-5/8	1464
MARQ42IN-B	67	1702	62-5/8	1591

Figure 10.1 Non-combustible Facing Diagram

B. Finishing Templates

Two side finishing templates and one top finishing template are supplied with the appliance. Refer to the decorative barrier front instructions for template removal.

INSIDE FIT Method: The finishing template pieces are required for installations that require more than one inch thick finishing materials to be installed over the face of the factory-supplied 1/2 inch non-combustible board. Refer to section 10.D for more information.

OVERLAP Method: The supplied templates are not required for finishing materials less than one inch thick. The required decorative barrier front will overlap finish materials less than one inch thick. Refer to section 10.D for more information. Remove template by removing the the two top screws and two screws on each side. The glass assembly will need to be removed to access the side screws. Follow the glass removal instructions in Section 11.

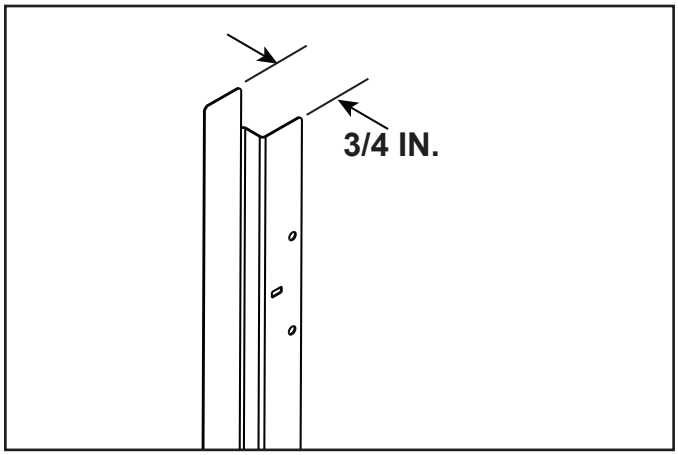

Figure 10.3 Left and Right Side Finishing Template Bends

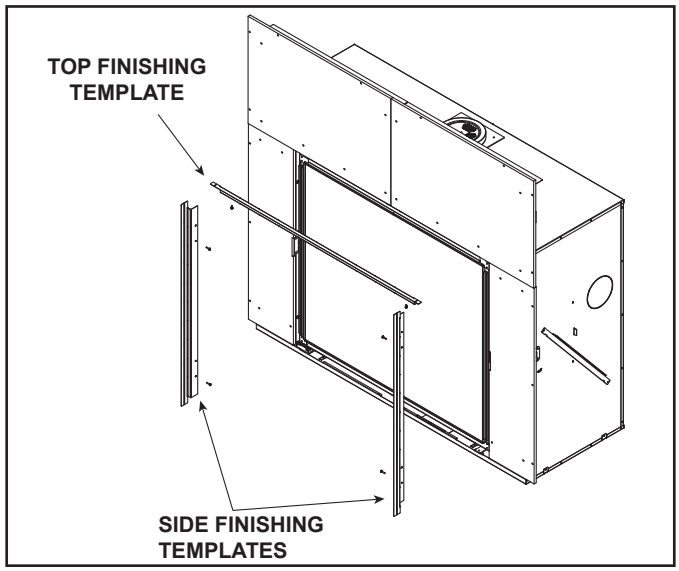

Figure 10.4 Top and Side Finishing Template Locations

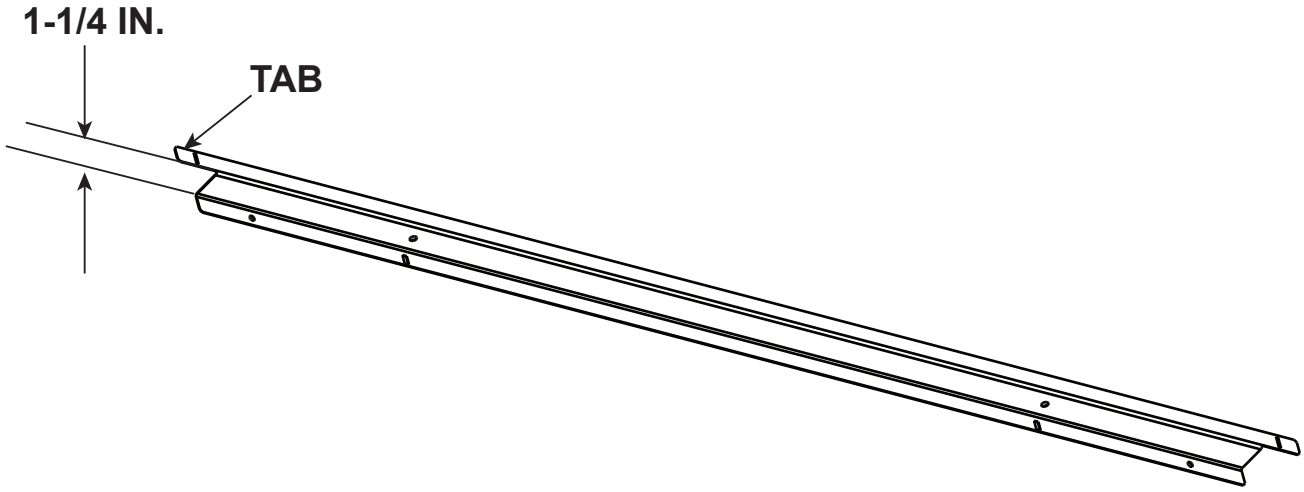

Figure 10.2 Top Finishing Template Bend

Note: A thin layer of mortar may be applied over the visible non-combustible board between finishing material and the fireplace opening.

Figure 10.5 Finishing Template Bends

C. Mantel and Wall Projections

WARNING! Risk of Fire! *Comply with all minimum clearances as specified. Framing closer than the minimums listed must be constructed entirely of non-combustible materials (i.e., steel studs, concrete board, etc.).*

When installing a mantel, provisions must be made in order to secure the mantel to the adjacent framing materials. For example, lintel brackets or lag bolts may be considered for this purpose.

Combustible Mantel Legs or Wall Projections

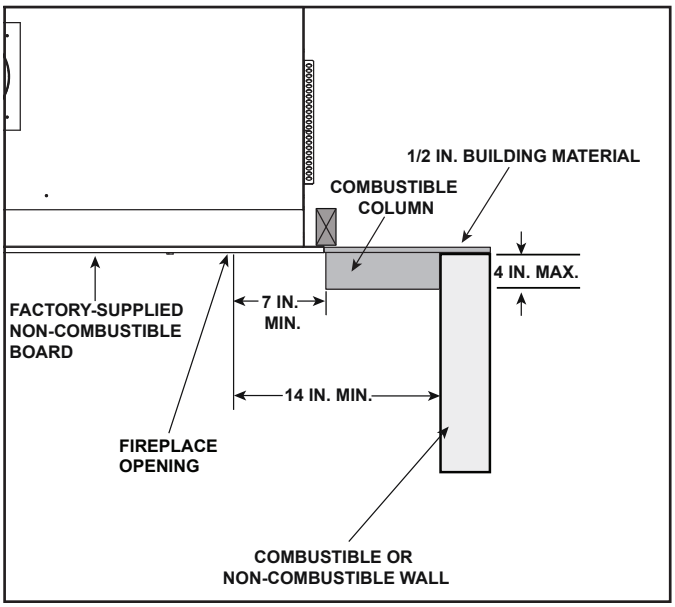

Figure 10.6 Combustible Mantel Leg and Wall Projections

Non-Combustible Mantel Legs or Wall Projections

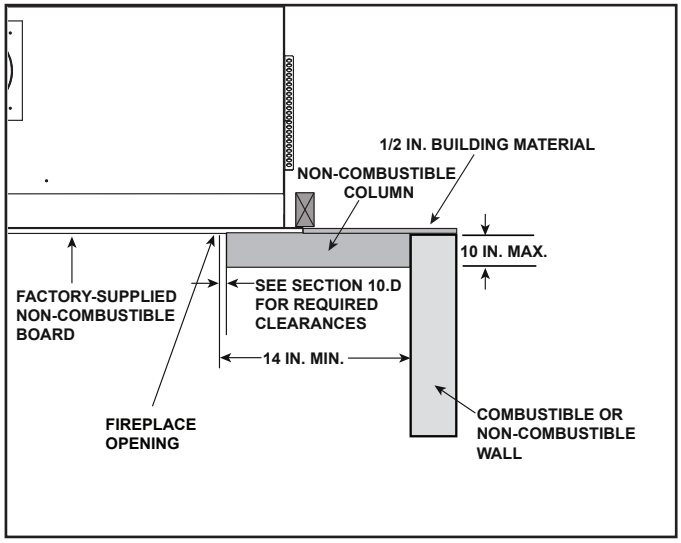

Figure 10.7 Non-Combustible Mantel Leg and Wall Projections

Non-Combustible Zone

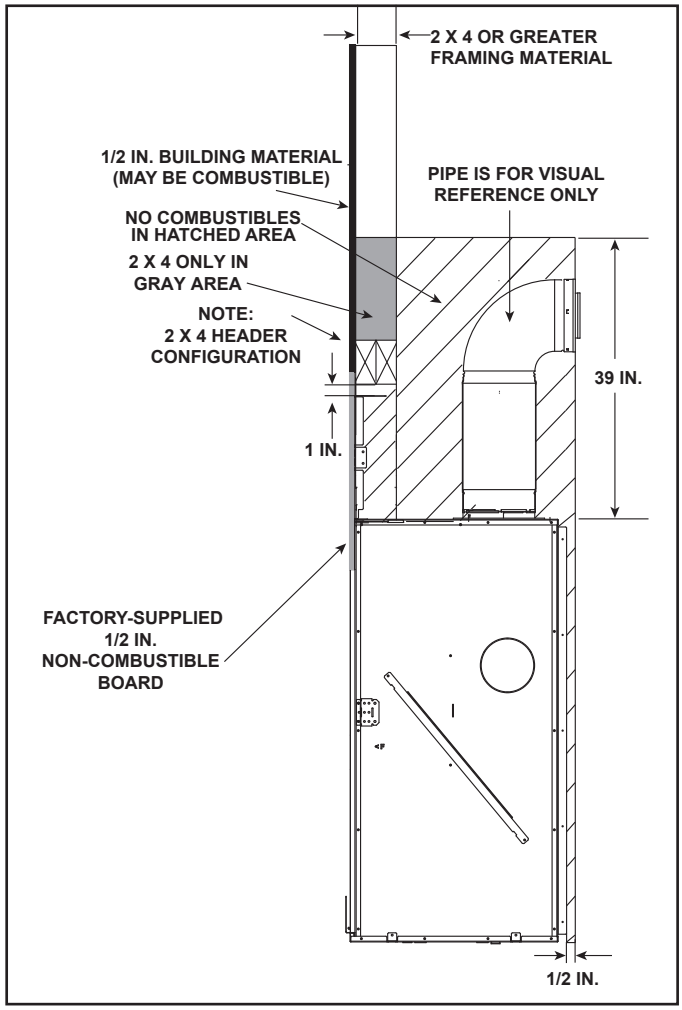

Figure 10.8 Non-Combustible Zone

Combustible Mantel Projections

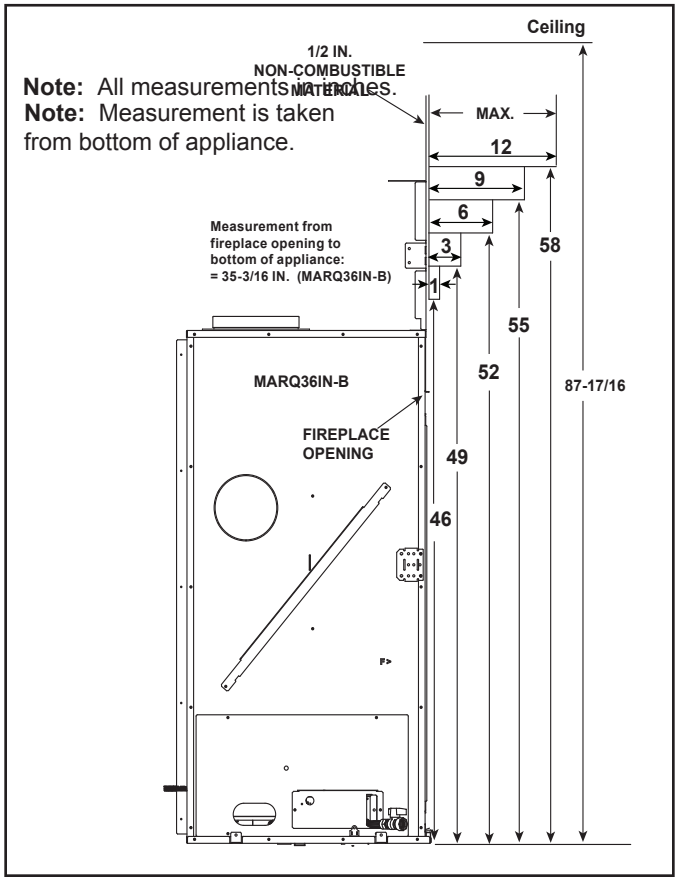

Figure 10.9 Combustible Mantel Allowance - MARQ36IN-B

Non-Combustible Mantel Projections

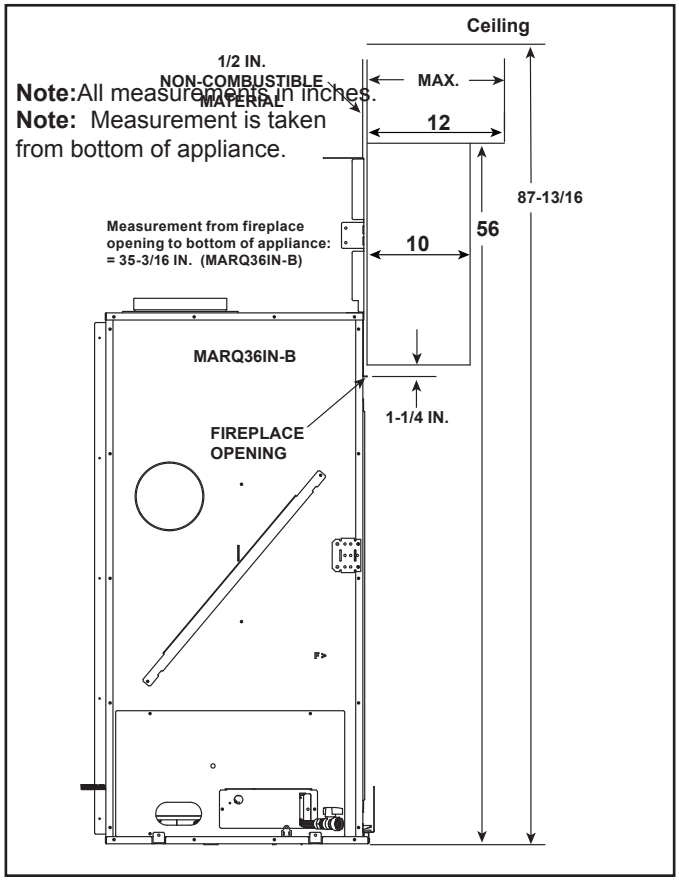

Figure 10.10 Non-Combustible Mantel Allowance - MARQ36IN-B,

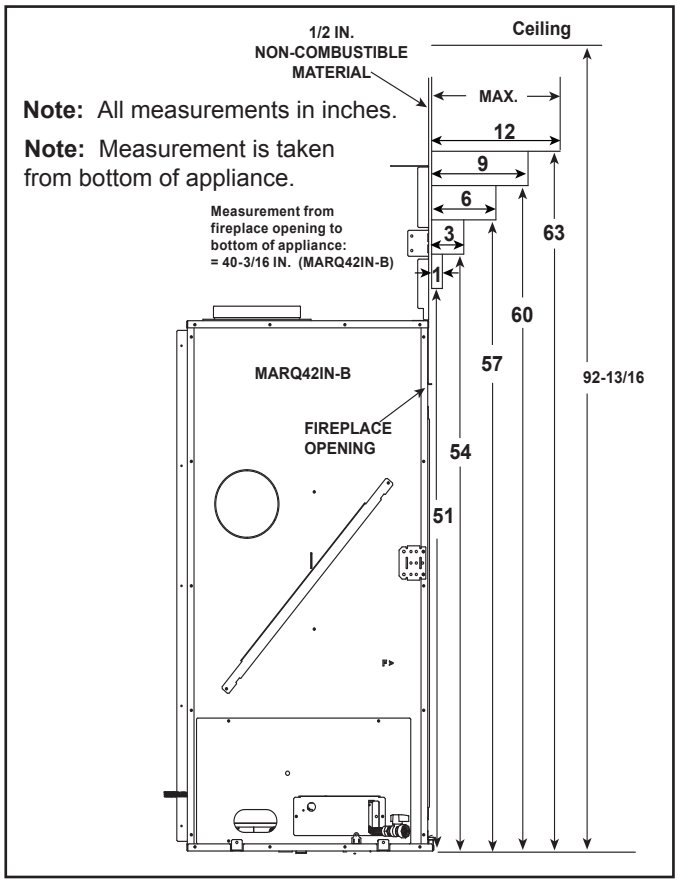

Figure 10.11 Combustible Mantel Allowance - MARQ42IN-B

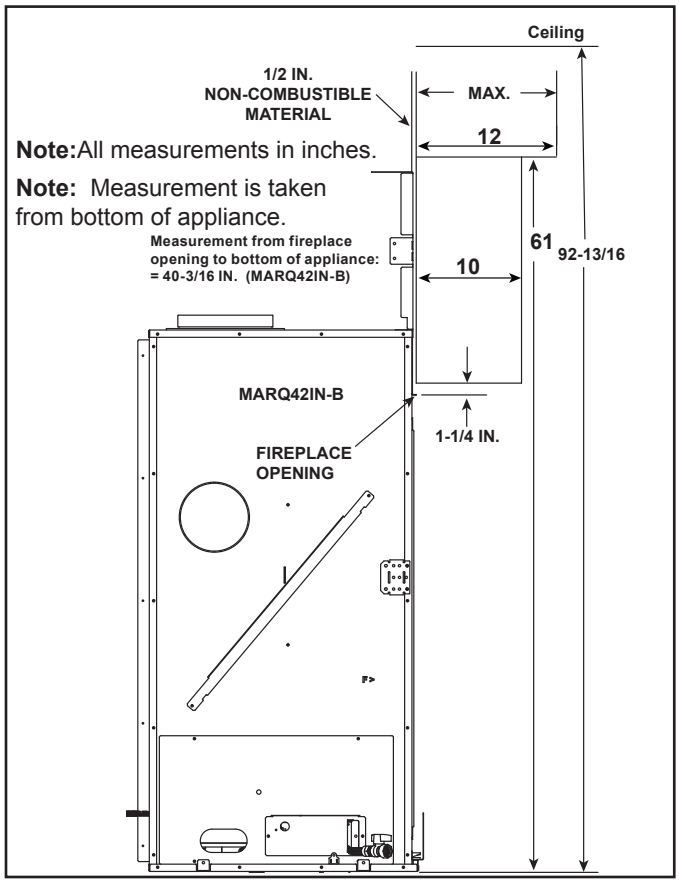

Figure 10.12 Non-Combustible Mantel Allowance - MARQ42IN-B

D. Decorative Barrier Front Dimensions for Finishing

A decorative barrier front is required for this appliance. Only decorative barrier fronts certified for use with this appliance model may be used. Contact your dealer for a list of decorative barrier fronts that may be used. Once you have determined what kind of decorative barrier front and finishing material is going to be used on the fireplace, you may use the table below which shows the decorative barrier front models and the finishing material thickness allowed. For an inside fit there is an available template to ensure that proper decorative barrier front clearances are maintained with finishing material with thickness greater than 1 inch.

Approved Decorative Barrier Fronts: FSMQ36, FSMQ42

The decorative barrier fronts approved for use with this appliance have been designed to be installed by two methods: Overlap Fit or Inside Fit. Before beginning the installation, it is important to determine with method will be used.

Overlap Fit Method: These decorative barrier fronts have been designed to be installed over finishing material up to one inch thick.

Inside Fit Method: These decorative barrier fronts may be recessed into non-combustible finishing material up to 10 inches thick.

NOTICE: Proper clearances from the fireplace opening to any finishing material thicker than 1 inch MUST be maintained.

NOTE: Finishing templates are included with this product. See Section 10.B.

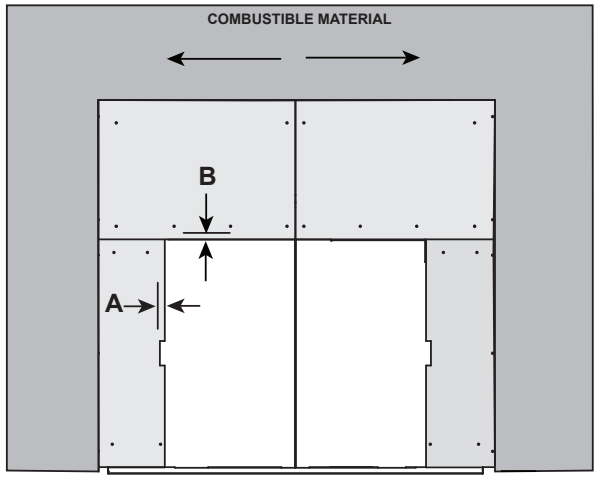

DIMENSIONS	
A	3/4 IN.
B	1-1/4 IN.

Figure 10.11 Inside Fit Decorative Barrier Fronts

A. Fixed Glass Assembly

WARNING! Risk of Asphyxiation! *Handle fixed glass assembly with care. Inspect the gasket to ensure it is undamaged and inspect the glass for cracks, chips or scratches.*

- ***DO NOT*** *strike, slam or scratch glass.*
- ***DO NOT*** *operate fireplace with glass removed, cracked, broken or scratched.*
- *Replace as a complete assembly.*

CAUTION! Risk of Injury! *Glass assembly installation and removal must be performed by a qualified service technician. See chart below for glass assembly weights.*

- ***MARQ42IN-B MODELS:*** ***It is recommended that Glass installation and removal be performed by two qualified service technicians.***

Glass Weights	
MARQ36IN-B	**MARQ42IN-B**
32 lbs	**41 lbs**

CAUTION! Risk of Cuts or Abrasions. *Wear protective gloves and safety glasses during installation. Sheet metal edges are sharp.*

Removing Fixed Glass Assembly

This fixed glass assembly is held in place by lower glass clips, side clips and top retaining rail. To remove clips, engage the spring clips with the tool and pull tool out slightly.

1. The glass clip removal/installation tool is fastened to the lower right corner of the appliance. Remove tool by removing one screw. See Figure 11.1. If glass clip removal tool becomes misplaced, a cotter pin removal tool may be used.

NOTICE: *Protect and prevent the hearth from damage by covering it with a drop cloth.*

Figure 11.1. Glass Clip Tool

Figure 11.2. Glass Clip Tool Location

2. To disengage bottom glass clips, position the glass clip removal/installation tool parallel to the floor and insert it about two inches into the gap between the glass frame and the front bottom fireplace lip. Insert the tool on the lower left side of the glass clip and move to the right to engage the clip. Using one motion, pull out slightly while pushing down to disengage bottom glass clip. Repeat for the other bottom spring clips. There are three on the MARQ36IN-B and four on the MARQ42IN-B. See Figure 11.2 and Figure 11.3.

Figure 11.3. Inserting Glass Clip Tool

3. Disengage the left and right glass clips one at a time using the glass clip removal/installation tool. Insert tool from the top side of the side glass clip. Pull the glass tool out slightly to disengage the side clip. See Figure 11.7.
4. Grasp the left and right sides of the glass assembly and carefully pull outward to remove the bottom from the support tabs on the bottom glass clips. Lower the glass to remove it from the top retainer rail.

CAUTION! Risk of Injury! DO NOT *put fingers under glass frame. Fingers may get pinched by glass frame during removal.*

Replacing Fixed Glass Assembly

This fixed glass assembly is held in place by two side clips, one top retaining rail and lower glass clips. The MARQ36IN-B has three lower glass clips and the MARQ42IN-B has four lower glass clips. To remove clips, engage the spring clips with the tool and pull tool out slightly. Rotate wrist left and right to disengage clip. The glass clip tool is shown in Figure 11.1.

1. Tool is fastened to the lower right corner of the fireplace. Remove tool by removing one screw. If glass clip removal tool becomes misplaced, a cotter pin removal tool may be used.
2. Position the fixed glass assembly so that it is about eight inches from the face of the appliance. See Figure 11.4.

Figure 11.4 Positioning Glass

3. Center the fixed glass assembly from left to right inside the top of the appliance opening.

   The glass frame has tabs on the bottom that coincide with the bottom glass clip location. The MARQ36IN-B has three tabs and the MARQ42IN-B has four tabs. If the glass is not centered, it cannot be installed properly. Align the notch at the top center of the glass frame assembly with the notch on the top retaining rail. See Figure 11.5.

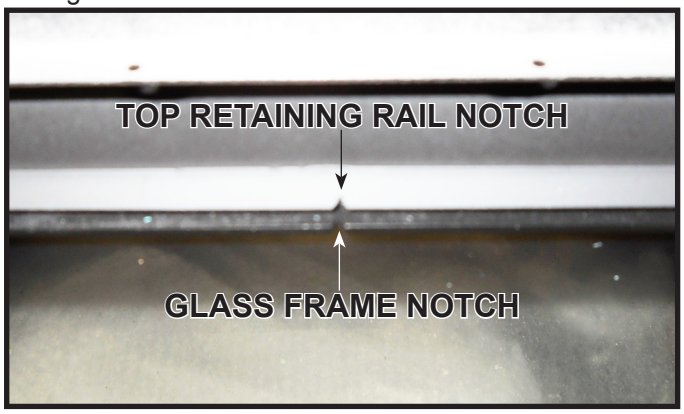

Figure 11.5 Align Notches

4. Install fixed glass assembly by lifting it up and sliding it into the top retaining rail. Grasp the fixed glass assembly on the sides.

***CAUTION! Risk of Injury! DO NOT** put fingers under glass frame. Fingers may get pinched by glass frame during installation.*

   Once the glass is installed tightly into the top retainer rail, push in the bottom so that the glass assembly rests on the support tabs on the glass clip. See Figure 11.6.

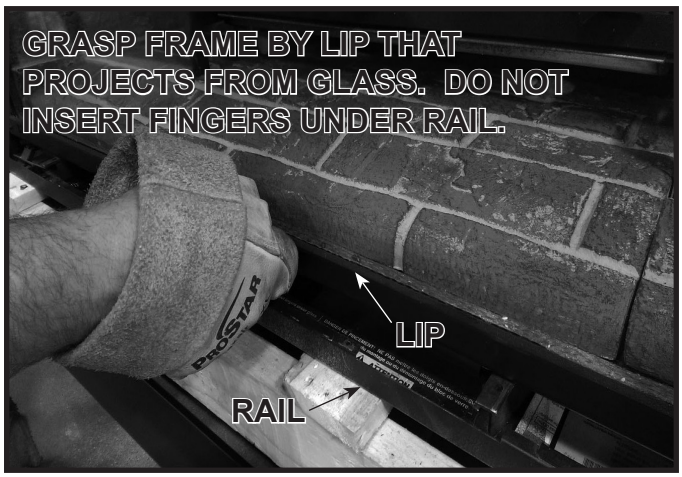

Figure 11.6. Installing Glass

5. Ensure the fixed glass assembly is situated tight against the firebox face. Engage the left and right glass clips using the glass clip tool. See Figure 11.7.

Figure 11.7. Securing Side Glass Clips

6. Once the left and right glass clips are installed, engage the bottom clips by inserting the glass clip tool at a sharp downward angle to get between the gap between the glass frame and the front bottom fireplace lip. See Figure 11.8.
7. Return glass tool to its shipping location in the lower right corner of the appliance and secure with one screw.

Figure 11.8. Securing Bottom Glass Clips

B. Remove the Shipping Materials

Remove shipping materials from inside or underneath the firebox.

- The splatter guard is a piece of corrugated material used to protect the appliance during the installation process before finishing work on the whole hearth is complete. Splatter guards may be factory installed or accompany the decorative barrier front of the unit, depending on the fireplace model. Splatter guards must be removed before appliance is fired.

WARNING! Risk of Fire! *Close the ball valve before installing the splatter guard to prevent accidental lighting. Remove the splatter guard before lighting the appliance.*

C. Clean the Appliance

Clean/vacuum any sawdust that may have accumulated inside the firebox or underneath in the control cavity.

D. Refractory

WARNING! *Refractory is REQUIRED to be installed in appliance. Operating the appliance without refractory is not safe.*

Refractory set is required in product. Refractory kit is shipped separately with instructions. Follow directions supplied in kit for proper installation.

E. Lava Rock Placement

1. Apply the lava rock as shown in Figure 11.9. The lava is to be placed around the base hearth refractory and can be used to conceal the joints of the hearth base refractory pieces.

Figure 11.9. Apply Lava Rock

F. Glowing Ember Placement

WARNING! Risk of Explosion! *Follow ember placement instructions in manual. DO NOT place embers directly over burner ports. Replace ember material annually. Improperly placed embers interfere with proper burner operation.*

Ember material is shipped with this gas appliance. To place the ember material:

- Embers CANNOT be placed directly over ports. Care should be taken not to cover the lighting trail of ports (from back to front).
- Place dime-size pieces of Glowing Embers® just in front of the port trail, but not on or in between the ports (see Figure 11.10). Care should be taken so that the ports are not covered. Failure to follow this procedure will likely cause lighting and sooting problems.
- Save the remaining ember materials for use during appliance servicing. The embers provided should be enough for 3 to 5 applications.

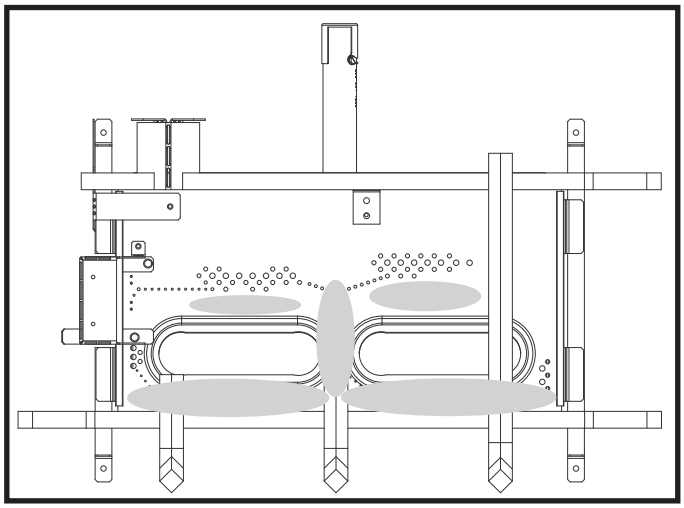

Figure 11.10. Location of Glowing Embers in Shaded Areas

G. Teco-Sil Placement

Teco-Sil is shipped with the appliance. To place Teco-Sil:

- Locate and open the bag of Teco-Sil.
- Spread Teco-Sil evenly over bottom glass assembly. See Figure 11.11
- Turn ember lights on and fog Teco-Sil to desired coverage. See Figure 11.12.

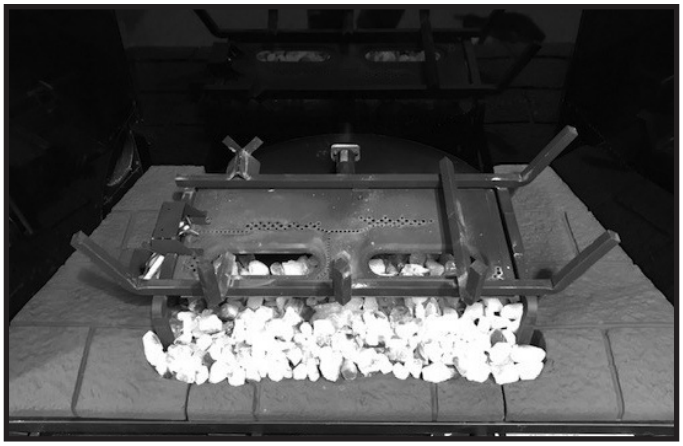

Figure 11.11. Teco-Sil Placement

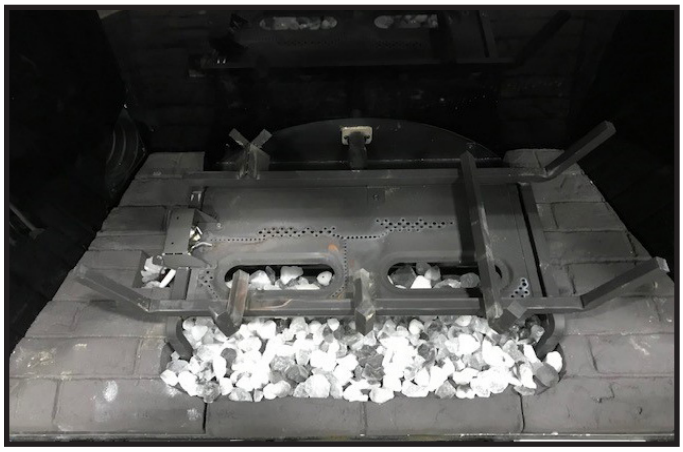

Figure 11.12. Teco-Sil Fogged

LOG PLACEMENT INSTRUCTIONS

Log Set Assembly: LOGSMQ36
Models: MARQ36IN, MARQ36IN-B

CAUTION: Logs are fragile! Carefully remove the logs from the packaging.

Log Set:

Log #1 - SRV2270-701 (01)
Log #2 - SRV2270-703 (03)
Log #3 - SRV2270-702 (02)
Log #4 - SRV2270-704 (04)
Log #5 - SRV2270-706 (06)
Log #6 - SRV2271-705 (15)
Log #7 - SRV2271-707 (17)

Logs can be identified by the number molded into the bottom of the log. The numbers are listed in parentheses above.

NOTE: Interior of MARQ36IN is shown in log installation pictures. Instructions apply to both the MARQ36IN and MARQ36IN-B.

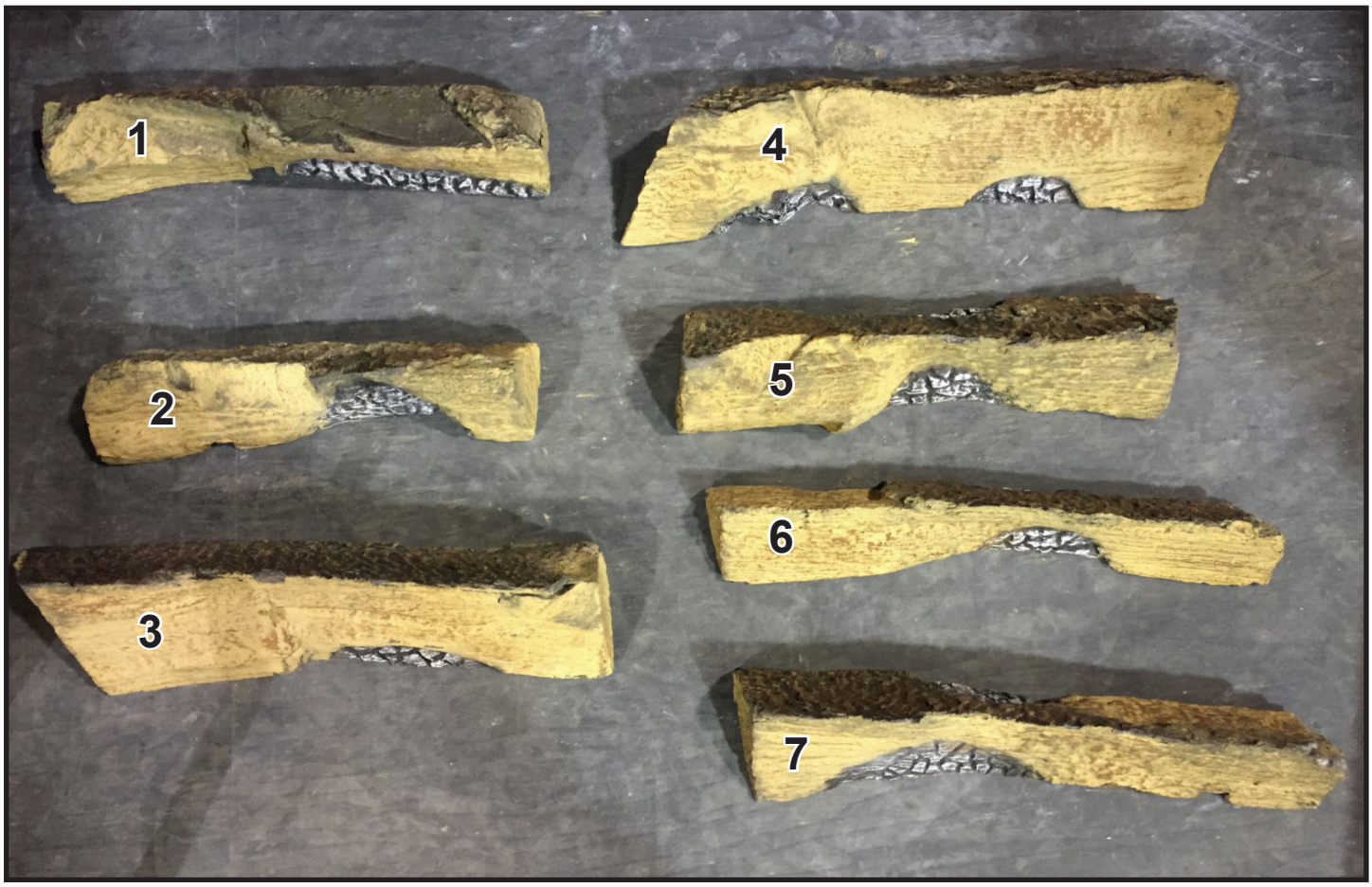

Figure 1. Log Set

Figure 2.

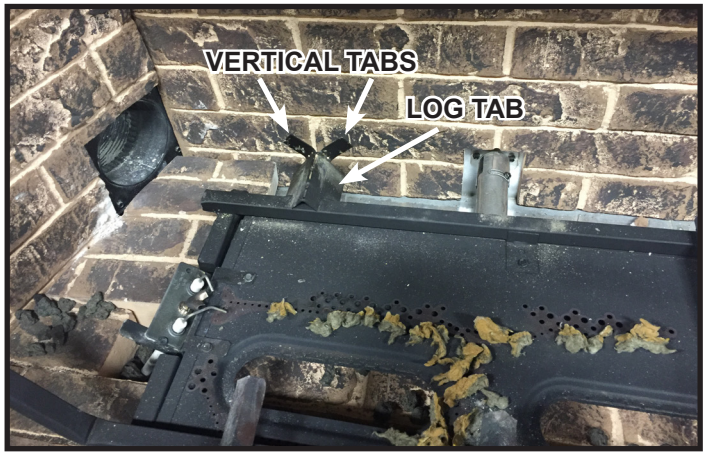

Figure 3.

Figure 4.

Figure 5.

CAUTION: Logs are fragile, handle with care. **Log #1 (SRV2270-701):** Log tab shown in Figure 3 is engaged with groove in bottom of log shown in Figure 4. Attached to the grate assembly on back left corner and position on rear cross member of grate assembly. Be sure that the log is pushed back against the two vertical tabs for proper placement. See Figure 5.

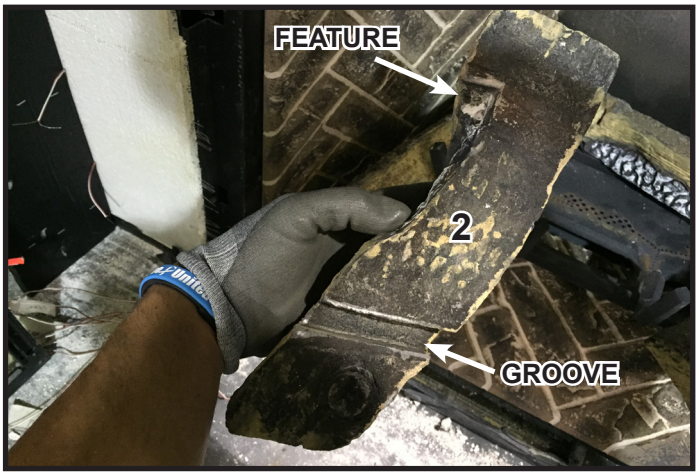

Figure 6.

Figure 7.

Log #2 (SRV2270-703): Log #2 is positioned on the front left grate using groove depicted in Figure 5. Ensure the log is slid forward to bend in grate tine. The log also mates with the center grate tine using feature shown in Figure 5.

Figure 8.

Figure 9.

Log #3 (SRV2270-702): Log #3 is positioned on the base refractory, slid tight to the far left grate tine shown in Figure 9, resting on the recess in Log #1 and the pilot shield. See Figure 9.

Figure 10.

Figure 11.

Log #4 (SRV2270-704): See Log #4 in Figure 10. Position Log #4 between grate tine and firebox wall. Rest the end of Log #4 on the flat area on Log #1 and pivot the log forward until it contacts the grate tine. See Figure 11.

Figure 12.

Figure 13.

Log #5 (SRV2270-706) : Position Log #5 on top of the center grate tine and interlock with the right front grate tine, mating with the recess on Log #4. See Figure 12 & 13.

Figure 14.

Figure 15.

Log #6 (SRV2271-705): Position Log #6 onto flat spots on Log #2 and Log #3. The locking feature in Log #6 will mate with the cleft in Log #2. See Figures 14 & 15.

Log #7 (SRV2271-707): Position Log #7 in the center of the firebox, mating with recesses in Log #1 and Log #5. Log #7 will rest on the top of Log #2 and mate with the middle grate tine. See Figure 16.

Figure 16. Log Set Installed

LOG PLACEMENT INSTRUCTIONS

Log Set Assembly: LOGSMQ42
Models: MARQ42IN, MARQ42IN-B

CAUTION: Logs are fragile! Carefully remove the logs from the packaging.

Log Set:

Log #1 - SRV2271-701 (11)
Log #2 - SRV2271-703 (13)
Log #3 - SRV2271-702 (12)
Log #4 - SRV2271-704 (14)
Log #5 - SRV2271-706 (16)
Log #6 - SRV2271-705 (15)
Log #7 - SRV2271-707 (17)

Logs can be identified by the number molded into the bottom of the log. The numbers are listed in parentheses above.

NOTE: Interior of MARQ42IN is shown in log installation pictures. Instructions apply to both the MARQ42IN and MARQ42IN-B.

Figure 1. Log Set

Figure 2.

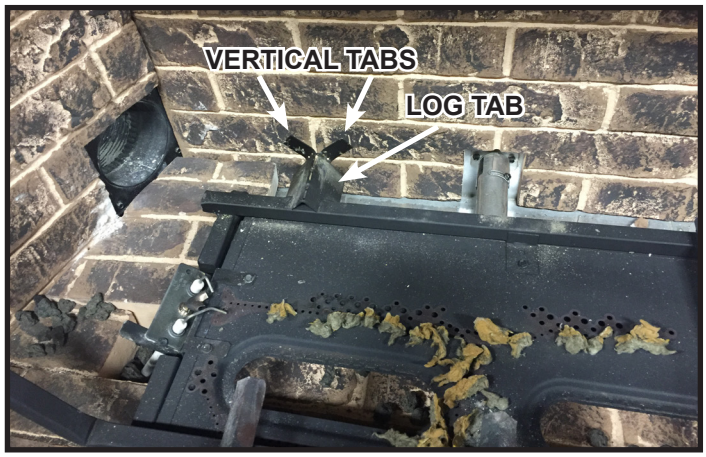

Figure 3.

Figure 4.

Figure 5.

CAUTION: Logs are fragile, handle with care. **Log #1 (SRV2271-701):** Log tab shown in Figure 3 engage with the groove in the bottom of log shown in Figure 4. Attach to grate assembly on back left corner and rest on rear cross member of grate assembly. Be sure that the log is pushed back against two vertical tabs for proper placement. See Figure 5.

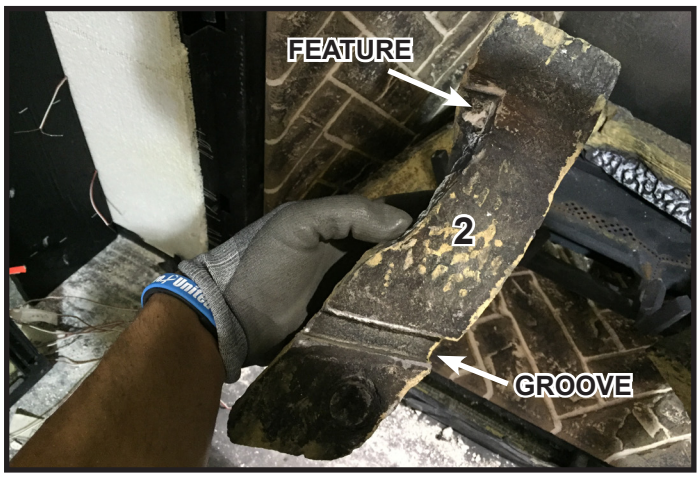

Figure 5.

Figure 6.

Log #2 (SRV2271-703): Position Log #2 on the front left grate using groove shown in Figure 5. Ensure the log is slid forward to bend in the grate tine. The log will also mate with the center grate tine using feature shown in Figure 5.

Figure 8.

Figure 9.

Log #3 (SRV2271-702): Position Log #3 on the base refractory. Mate log with the far left grate tine, into the vertical groove shown in Figure 8. Log #3 will rest on recess in Log #1 and the pilot shield. See Figure 9.

Figure 10.

Figure 11.

Figure 12.

Log #4 (SRV2271-704): See bottom of Log #4 in Figure 10. The two grooves will mate with the grate tines as shown in Figure 11. The log will contact the base refractory, side refractory panel, and the tip of Log #1, creating 5 total contact points.

Figure 13.

Figure 14.

Log #5 (SRV2271-706): Position Log #5 on top of the center grate tine and interlock with the right front grate tine, mating with the recess on Log #4. See Figure 13 & 14.

Figure 15.

Figure 16.

Log #6 (SRV2271-705): Positon Log #6 onto flat spots on Logs #2 and Log #3. The locking feature in Log #6 will mate with the cleft in Log #2 as shown in Figures 15 &16.

Log #7 (SRV2271-707): Position Log #7 in the center of the firebox, mating with recesses in Log #1 and Log #5. Log #7 will rest on top of Log #2 and mate with middle grate. See Figure 17.

Figure 17. Log Set Installed.

I. IntelliFire Touch Control System Setup

- Detailed instructions for electrical wiring and connections are provided in Section 8.
- Verify that the 3-Position switch on the IFT-ECM is switched to the REMOTE position. Detailed Operating Instructions for the IFT-ECM are provided in Section 3.J of the Owner's Manual.

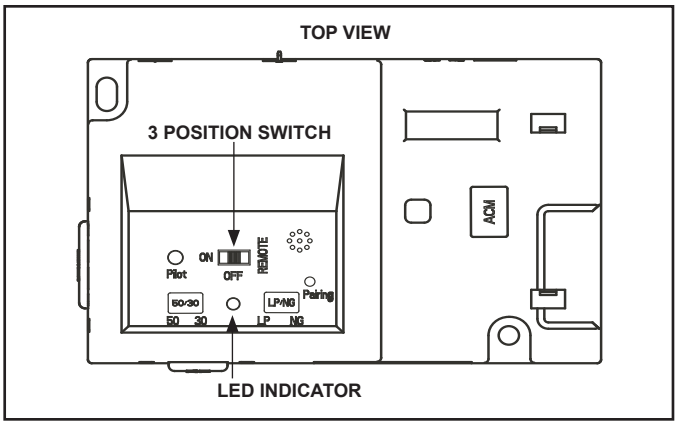

Figure 11.5 IFT-ECM

This appliance is factory-equipped with an IntelliFire Touch remote control. The remote was paired to the fireplace and tested at the factory. It does not need to be paired again, unless an accessory kit will be added at the time of installation. If no additional accessory will be added, simply follow steps one through seven below.

1. If installed, remove batteries from remote.
2. Verify that the new appliance has power and secure electrical connections.
3. Adjust the ECM selector switch to 'REMOTE' mode.
4. Wait to verify LED indicator on the ECM stops flashing.
5. Install batteries in the RC400 remote.
6. The RC400 remote will automatically pair to the appliance as pre-set at the factory.

J. LED's

LED's are factory installed. No additional set up or activation required.

- See Owner's Manual for maintenance and bulb replacement.

K. Install Decorative Barrier Front

WARNING! Risk of Fire! *Install ONLY decorative barrier fronts approved by Hearth & Home Technologies. Unapproved decorative barrier fronts may cause fireplace to overheat.*

This fireplace has been supplied with an integral barrier to prevent direct contact with the fixed glass panel. DO NOT operate the fireplace with the barrier removed.

Contact your dealer or Hearth & Home Technologies if the barrier is not present or help is needed to properly install one.

For more information refer to the instructions supplied with your decorative barrier front.

12 Reference Materials

A. Vent Components Diagrams

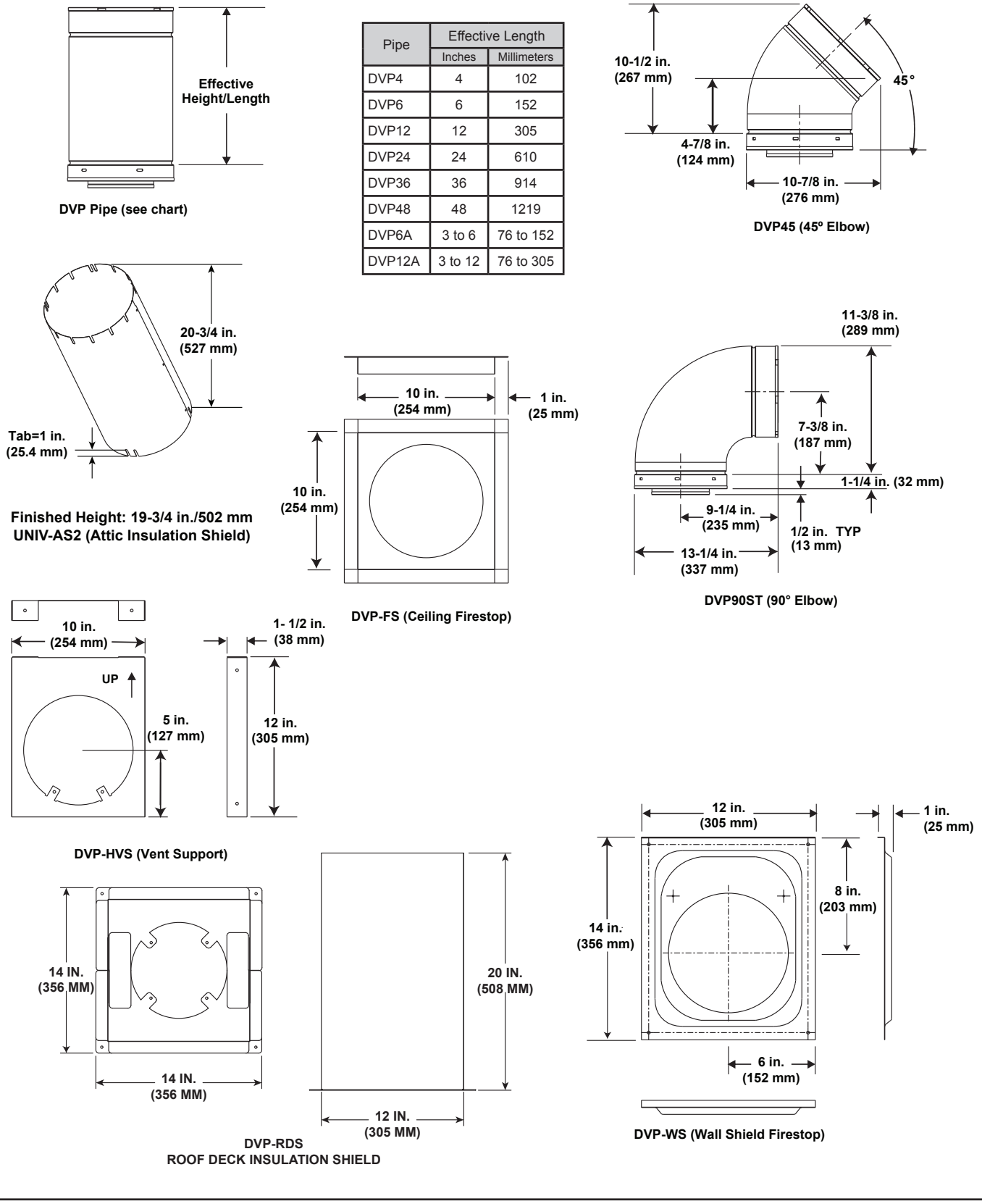

Pipe	Effective Length	
	Inches	Millimeters
DVP4	4	102
DVP6	6	152
DVP12	12	305
DVP24	24	610
DVP36	36	914
DVP48	48	1219
DVP6A	3 to 6	76 to 152
DVP12A	3 to 12	76 to 305

Figure 12.1 DVP vent components

A. Vent Components Diagrams (*continued*)

Note: Heat shields MUST overlap by a minimum of 1-1/2 in. (38 mm). **The heat shield is designed to be used on a wall 4 in. to 7-1/4 in. (102 mm to 184 mm) thick.** If wall thickness is less than 4 in. (102 mm) the existing heat shields must be field trimmed. If wall thickness is greater than 7-1/4 in. (184 mm) a DVP-HSM-B will be required.

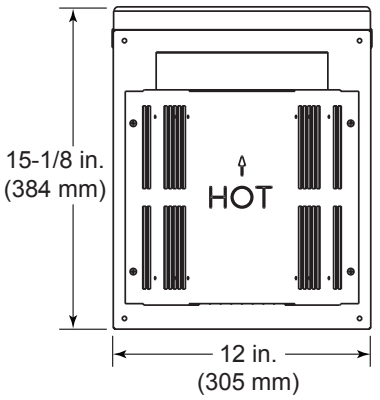

DVP-TRAP
Horizontal Termination Cap

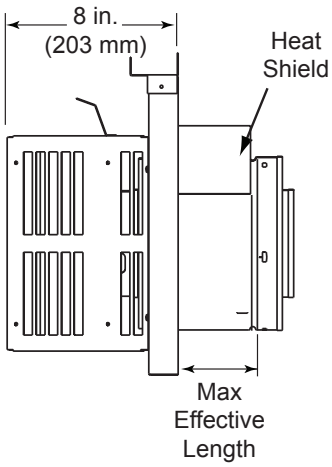

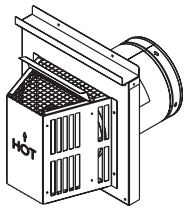

Term Cap	Minimum Effective Length	Maximum Effective Length
Trap1	3-1/8 in.	4-5/8 in.
	79 mm	117 mm
Trap2	5-3/8 in.	9-3/8 in.
	137 mm	238 mm

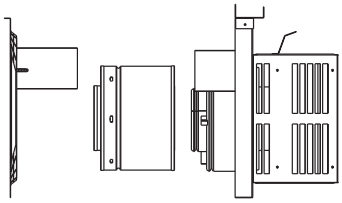

DVP-TRAP1

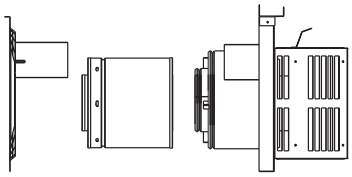

DVP-TRAP2

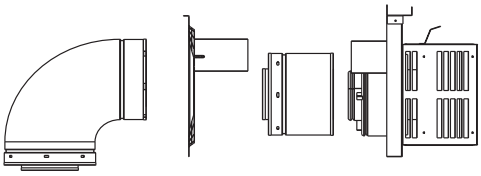

DVP-TRAPK1

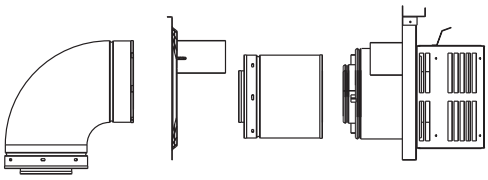

DVP-TRAPK2

Figure 12.2 DVP vent components

A. Vent Components Diagrams (*continued*)

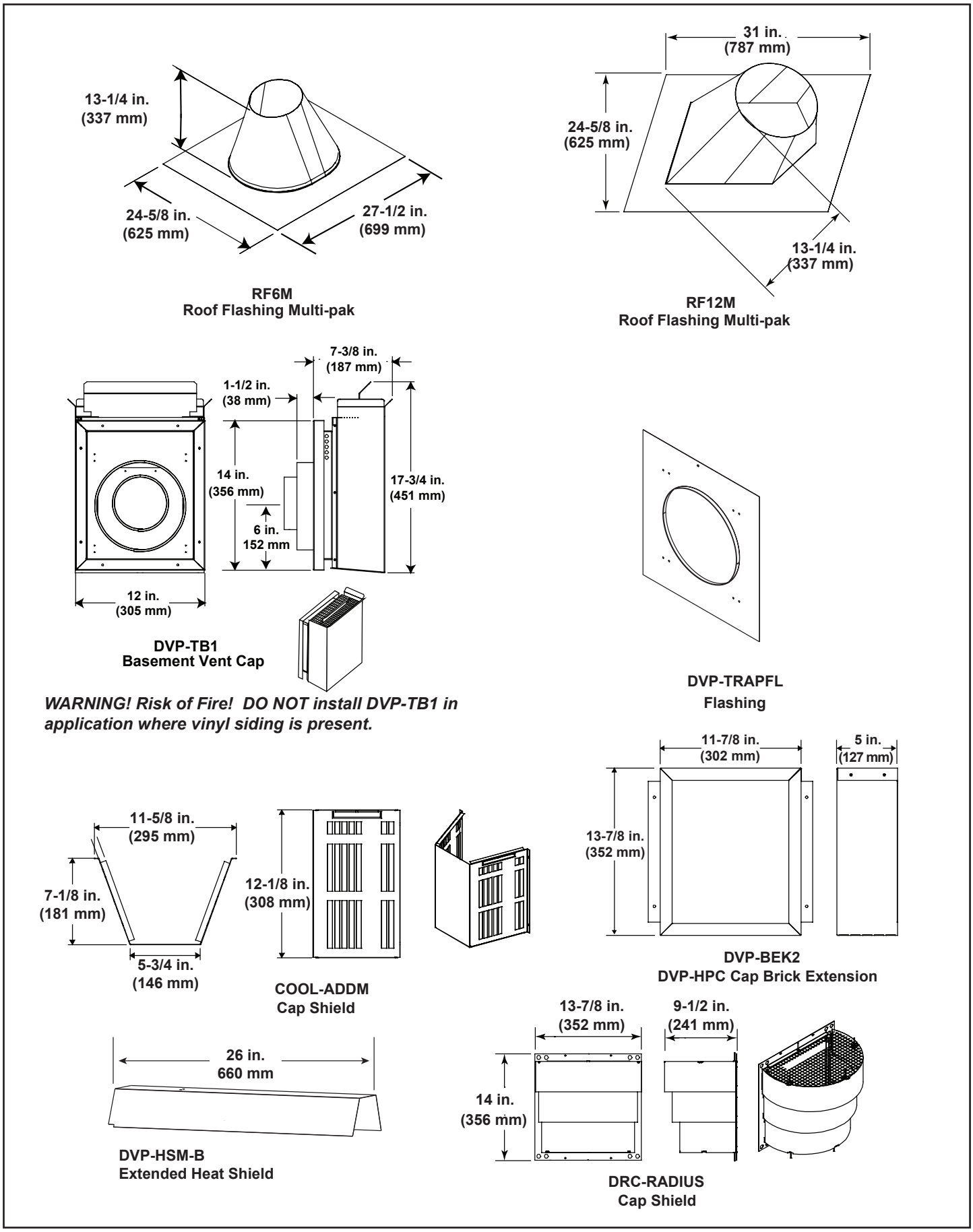

Figure 12.3 DVP Vent Components

A. Vent Components Diagrams *(continued)*

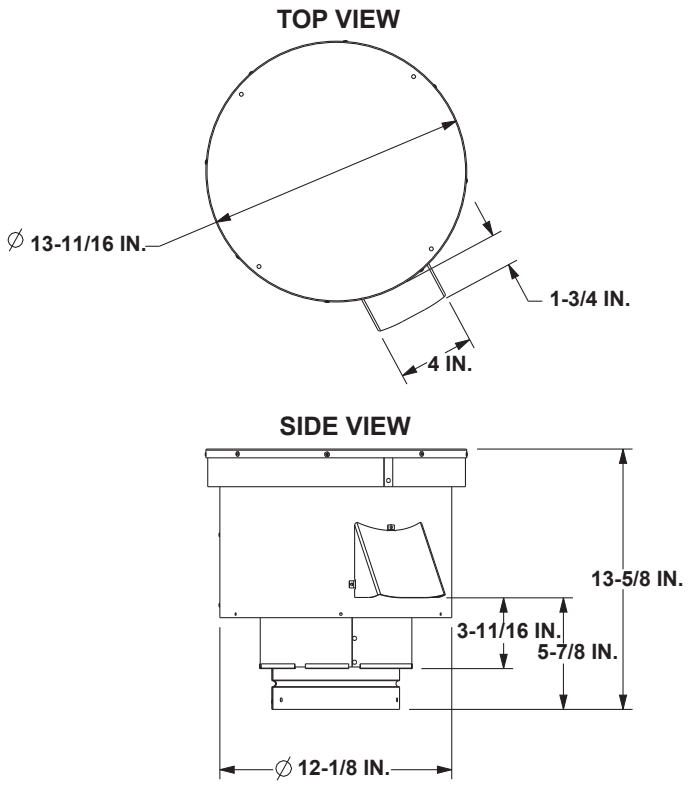

PVV-SLP
Vertical Power Vent

Required Wire Harness and PVV-SLEEVE	
Lengths Available	**Part Number**
10 ft. PV Wire Harness	PVI-WH10
20 ft. PV Wire Harness	PVI-WH20
40 ft. PV Wire Harness	PVI-WH40
60 ft. PV Wire Harness	PVI-WH60
80 ft. PV Wire Harness	PVI-WH80
100 ft. PV Wire Harness	PVI-WH100
Description	**Part Number**
12 in. Wire Harness Sleeve	PVV-SLEEVE-12
48 in. Wire Harness Sleeve	PVV-SLEEVE-48

Note: A wire harness is required to power the PVV-SLP and connect it to the appliance. It is ordered separately from the PVV-SLP. Contact your dealer to order.

Note: The PVV-SLEEVE-12 and/or PVV-SLEEVE-48 is required to be installed with the PVV-SLP. It is ordered separately from the PVV-SLP. Contact your dealer to order.

Figure 12.4 PVV-SLP Vent Components

A. Vent Components Diagrams (*continued*)

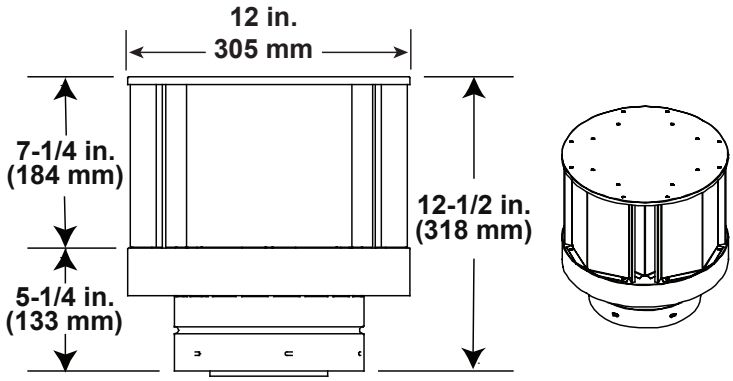

DVP-TVHW
VerticalTermination Cap (Highwind)

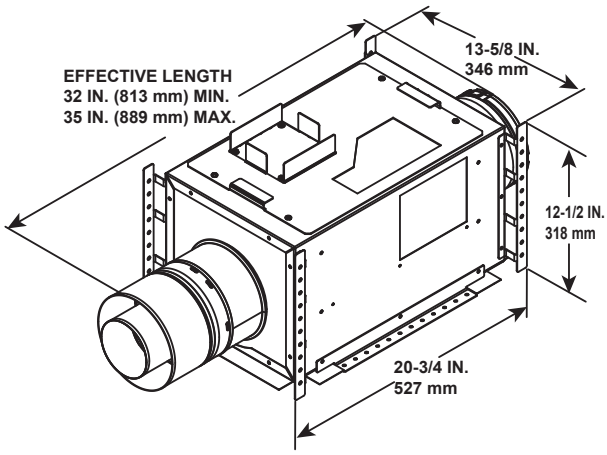

PVI-SLP-B
Power Vent Inline

Optional Wire Harness	
DESCRIPTION	**PART NUMBER**
10 ft. PV Wire Harness	PVI-WH10
20 ft. PV Wire Harness	PVI-WH20
40 ft. PV Wire Harness	PVI-WH40
60 ft. PV Wire Harness	PVI-WH60
80 ft. PV Wire Harness	PVI-WH80
100 ft. PV Wire Harness	PVI-WH100

Note: Wire harnesses required to power the PVI-SLP-B connect to the appliance and are ordered separately from PVI-SLP-B. Contact your dealer to order.

Note: The PVI-SLP-B requires one of the following options to be installed on this appliance.
Option A: IFT-RC400 **OR**
Option B: IFT-RC150, IFT-ACM
These accessories are purchased separately from the PVI-SLP-B. Contact your dealer to order.

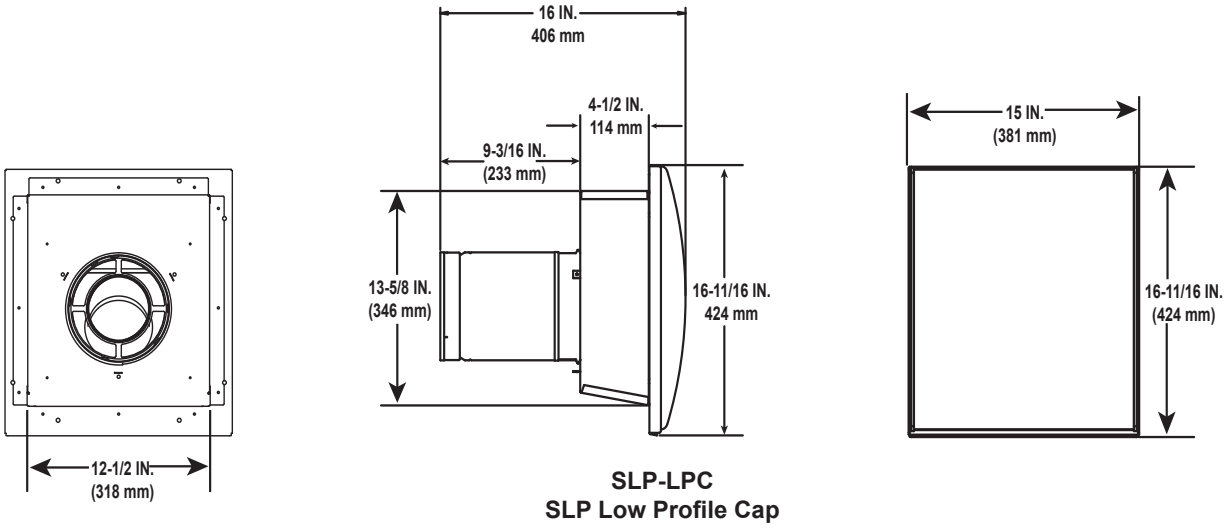

SLP-LPC
SLP Low Profile Cap

Figure 12.5 DVP vent components

A. Vent Components Diagrams (*continued*)

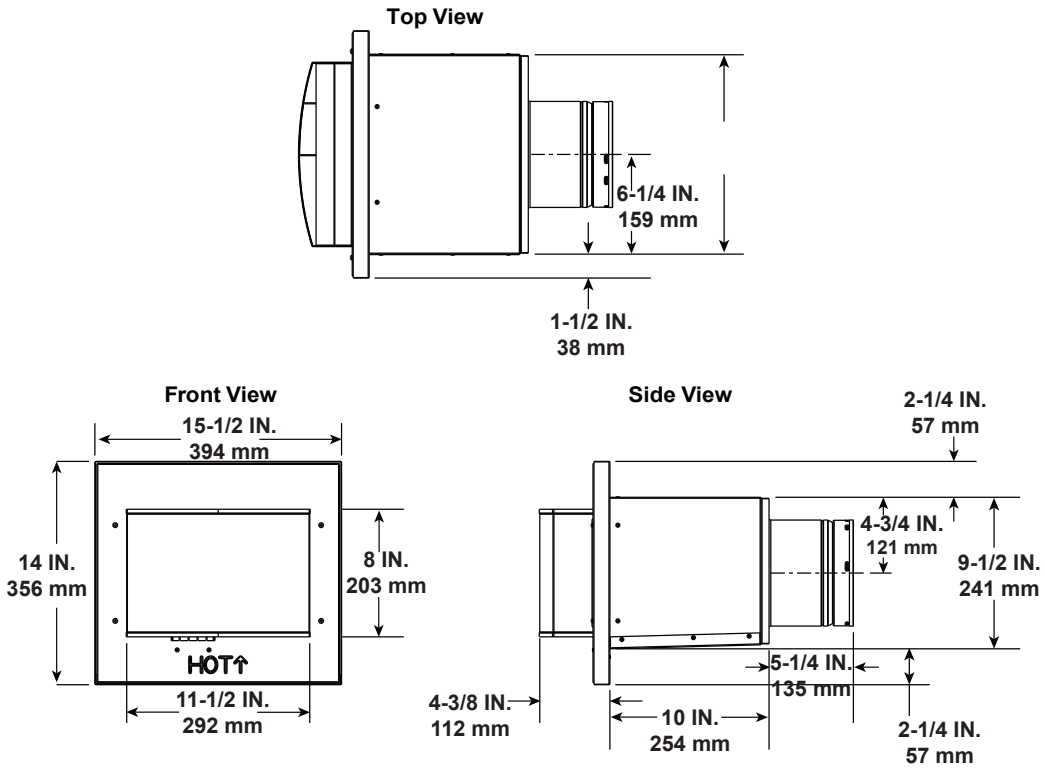

PVLP-SLP
Power Vent Low Profile

Required Wire Harness	
DESCRIPTION	**PART NUMBER**
10 FT PV Wire Harness	PVI-WH10
20 FT PV Wire Harness	PVI-WH20
40 FT PV Wire Harness	PVI-WH40
60 FT PV Wire Harness	PVI-WH60
80 FT PV Wire Harness	PVI-WH80
100 FT PV Wire Harness	PVI-WH100

Note: Wire harnesses required to power the PVLP-SLP connect to the appliance and are ordered separately from PVLP-SLP. Contact your dealer to order.

Note: A PVLP-HS heat shield is available and sold separately. Use if the PVLP-SLP is installed in a high traffic area.

Note: The PVLP-SLP requires one of the following options to be installed on this appliance.
Option A: IFT-RC400 or Option B: IFT-RC150, IFT-ACM.
These accessories are purchased separately from the PVLP-SLP. Contact your dealer to order.

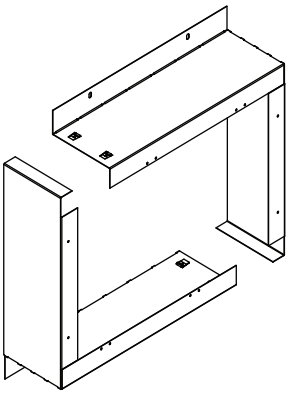

PVLP-BEK
Brick Kit

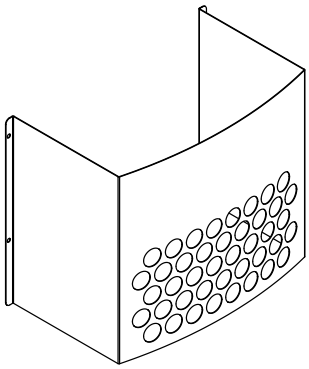

PVLP-HS
Heat Shield

Figure 12.6 PVLP-SLP Vent Components

B. Accessories

Install approved accessories per instructions included with accessories. Contact your dealer for a list of approved accessories.

WARNING! Risk of Fire and Electric Shock! *Use ONLY Hearth & Home Technologies-approved optional accessories with this appliance. Using non-listed accessories could result in a safety hazard and will void the warranty.*

Remote Controls, Wall Controls and Wall Switches

Follow the instructions supplied with the control installed to operate your fireplace:

For safety:

- Install a switch lock or a wall/remote control with child protection lockout feature.
- Keep remote controls out of reach of children.

See your dealer if you have questions.

Optional Heat Management Kits

Follow the instruction supplied with the kit for operation.

- Preparation of the appliance for installing a heat management kit is discussed in Section 5.E.

See your dealer if you have questions.

Majestic, a brand of Hearth & Home Technologies

Please contact your Majestic dealer with any questions or concerns.

Printed in U.S.A. - Copyright 2022