Light Kit

Dingo® TX 1000 Turbo Compact Tool Carrier

Model No. 145-4544

Installation Instructions

Preparing the Machine

1. Park the machine on a level surface.
2. Engage the parking brake.
3. Lower the loader arms.
4. Shut off the engine and remove the key.
5. Open the hood.
6. Turn the battery-disconnect switch to the OFF position.
7. Remove the rear cover; refer to the *Operator's Manual* for the machine.

© 2024—The Toro® Company
8111 Lyndale Ave So
Bloomington, MN 55044

Register at
www.Toro.com

Original Instructions (EN)
Printed in the USA
All rights reserved

3469-591 A

Installing the Front Light

Parts Required

1	Light
1	Front bracket
1	Bolt (5/16 x 3/4 inch)
1	Nut (5/16 inch)
2	Carriage bolt (1/4 x 3/4 inch)
2	Nut (1/4 inch)

1. Install the front bracket to the frame on the left side of the control panel.

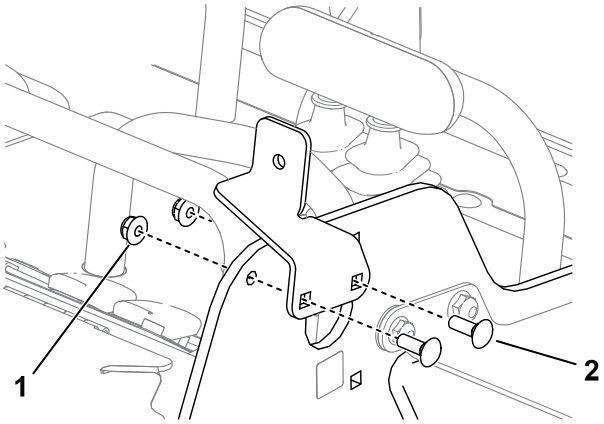

G504763

1 Nut—1/4 inch (2)

2 Carriage bolt—1/4 x 3/4 inch (2)

2. Install a light to the front bracket.

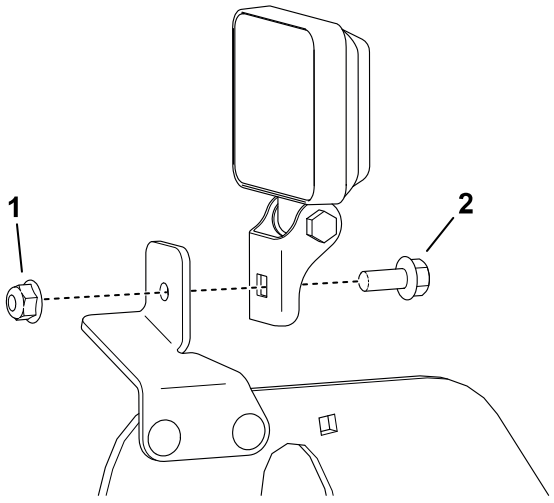

G504764

1 Nut—5/16 inch

2 Bolt—5/16 x 3/4 inch

Installing the Rear Light

Parts Required

1	Light
1	Rear bracket
1	Bolt (5/16 x 3/4 inch)
1	Nut (5/16 inch)
2	Bolt (1/4 x 3/4 inch)
2	Nut (1/4 inch)

1. Install the rear bracket to the frame on the right side of the machine.

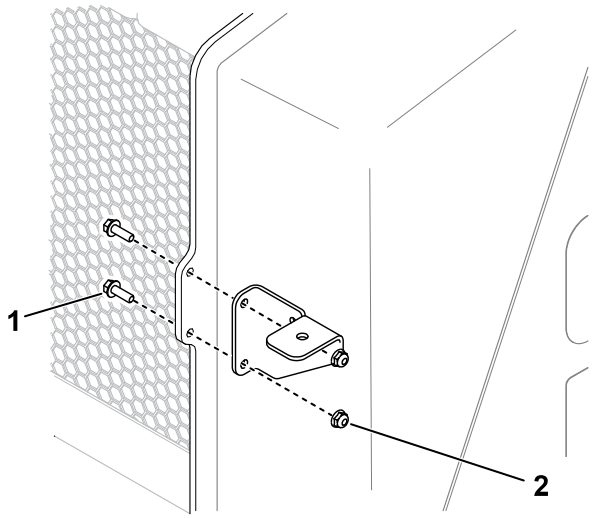

G504789

1. Bolt—1/4 x 3/4 inch (2)
2. Nut—1/4 inch (2)

2. Install a light to the rear bracket.

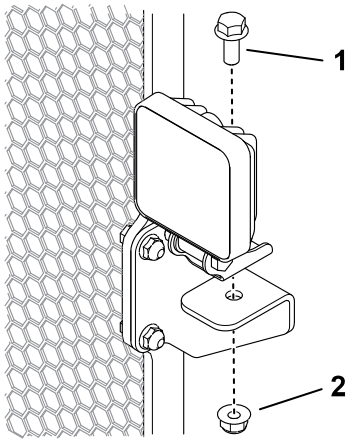

G504790

1. Bolt—5/16 x 3/4 inch
2. Nut—5/16 inch

Routing the Wire Harness

Parts Required

1	Wire harness
1	Switch
4	Cable tie

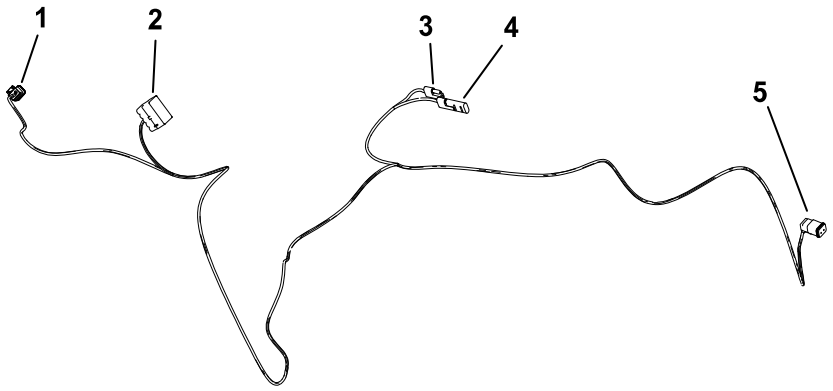

G341986s

1. Front light
2. Switch
3. Machine harness connector
4. Accessory connector
5. Rear light

1. Remove the 2 bolts securing the relay bracket to the frame.

   Note: This provides extra clearance to route the wire harness.

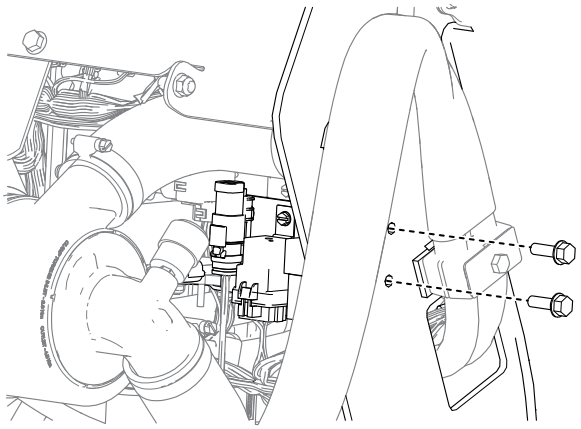

G508745

2. Remove the plug from the left side of the control panel. From inside the machine, behind the relay bracket, route the front light connector through the hole and connect it to the front light.

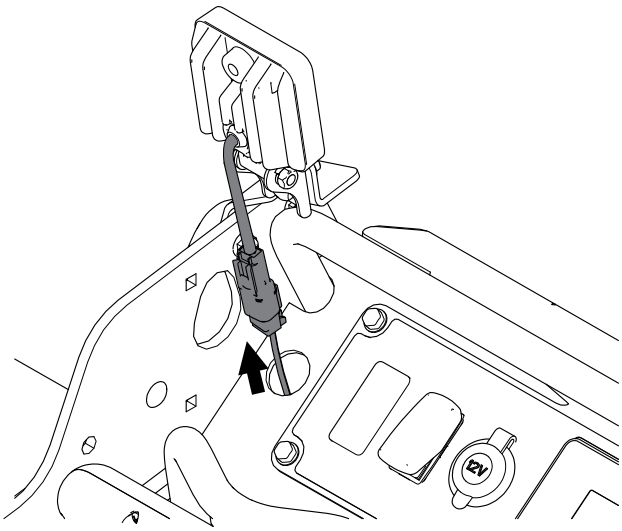

G508746

3. Remove the plug, route the switch connector through the hole, and connect it to the switch. Install the switch into the hole.

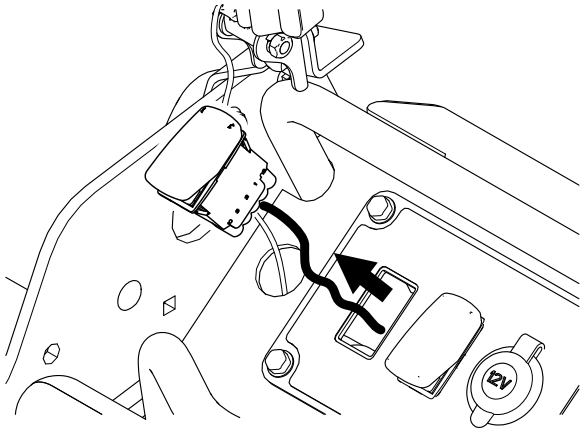

G508748

4. Route the rear light connector to the rear of the machine, under the hoses, to the right side of the machine, and connect it to the rear light.

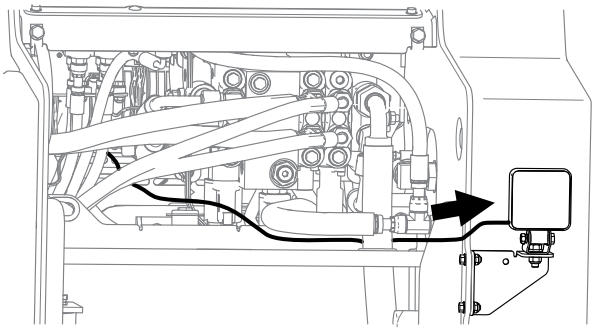

G508747

5. Connect the accessory connector to the accessory port (P02) on the machine wire harness.

   Note: Use the accessory connector from the kit wire harness to connect any other powered accessories.

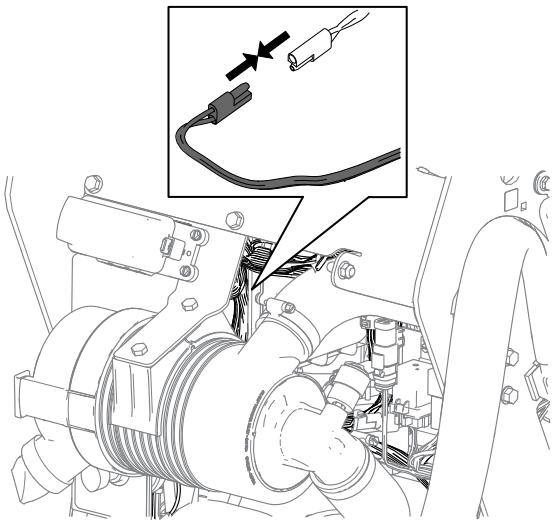

G508744

6. Use cable ties to secure the wire harness away from moving parts at the following locations:

   - Front reference bar

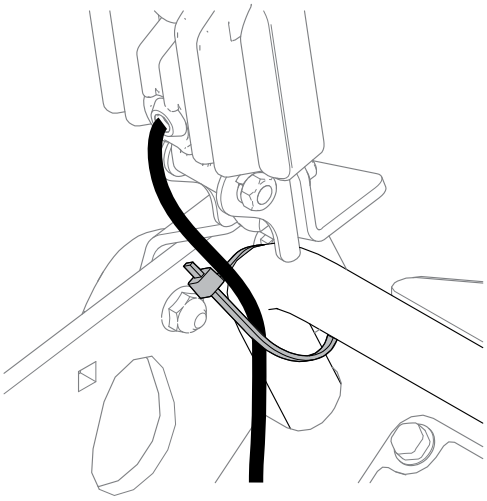

G508957

- Main wire harness, behind the air cleaner

  Note: Coil any excess slack in the wire harness when you secure it to the main wire harness.

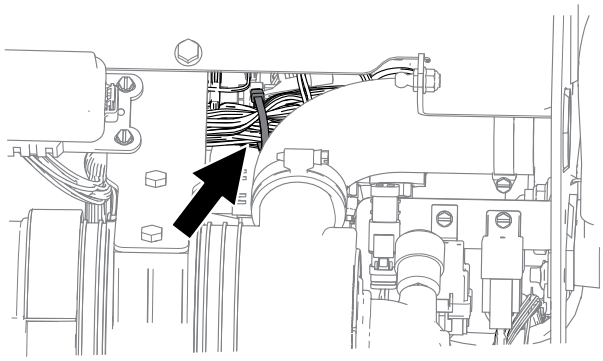

G508959

- Rear light bracket

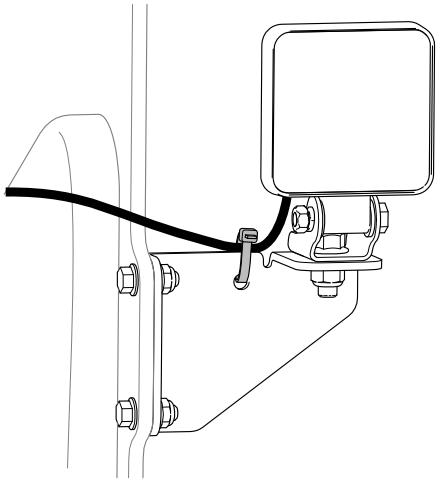

G508960

- Hydraulic hoses

IMPORTANT

Ensure that the wire harness is secured away from the radiator fan.

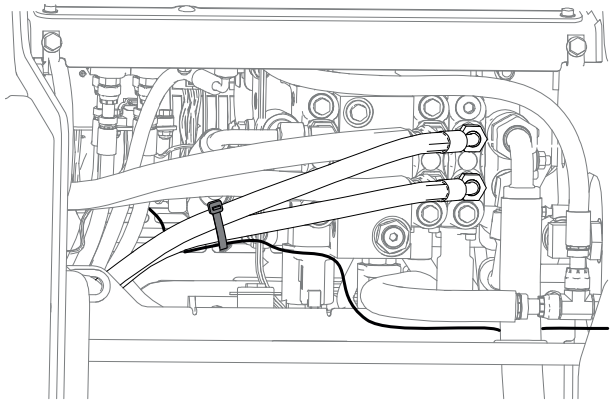

G508958

7. Use the 2 bolts previously removed to secure the relay bracket to the frame.

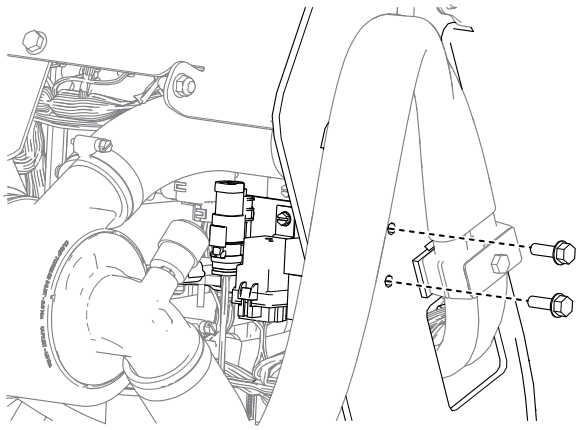

G508745

Installing the Reflectors

Parts Required

2	Reflector

Install the reflectors at the locations shown.

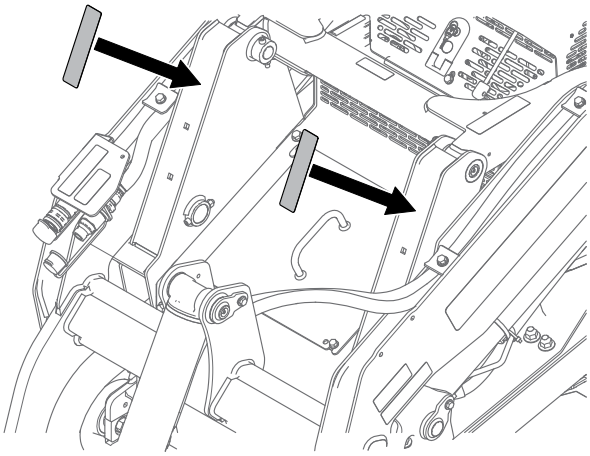

G504820

Completing the Installation

1. Install the rear cover.
2. Turn the battery-disconnect switch to the On position.
3. Close the hood.

Notes:

Notes:


TORO®