This product utilizes **R-454B** *refrigerant*

DIY® Series Single-Zone Mini-Split System

INSTALLATION & OWNER'S MANUAL

MODELS:

DIY-*-HP-WMAH-115D25-O
DIY-*-HP-WMAH-230D25-O
DIY-*-HP-C-115D25-O
DIY-*-HP-C-230D25-O



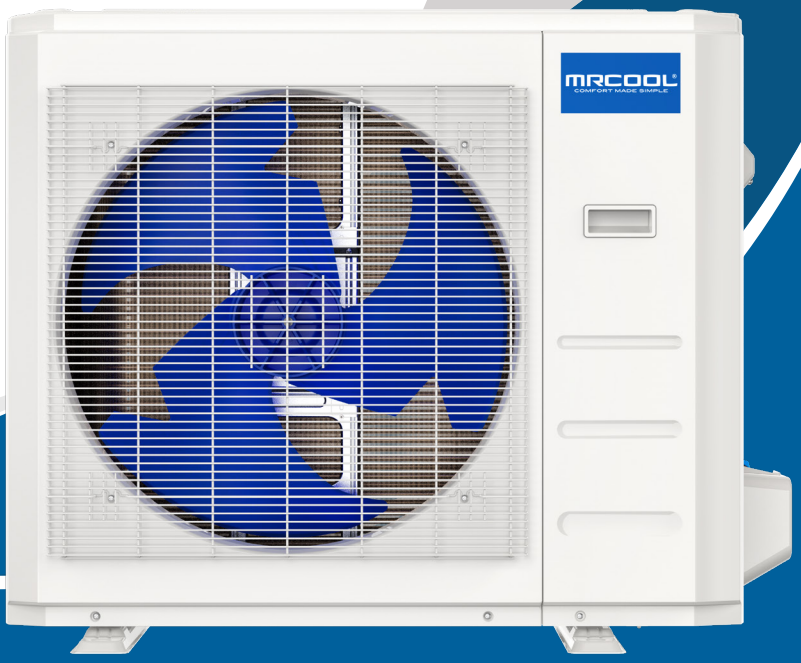

Read this manual carefully before installation and keep it where the operator can easily find it for future reference.

Due to updates and constantly improving performance, the information and instructions within this manual are subject to change without notice.

Version Date: February 26, 2025
Please visit www.mrcool.com/documentation to ensure you have the latest version of this manual.

MRCOOL®
COMFORT MADE SIMPLE

CONTENTS

1 SAFETY 2

2 UNIT OVERVIEW 9

2.1 Packing List 9
2.2 Indoor Unit Display 10
2.3 Additional Functions 11
2.4 Setting Angle of Airflow 12
2.5 Manual Operation 13
2.6 Packing & Unpacking the Unit 13

3 INDOOR UNIT INSTALLATION 14

3.1 Installation Overview 14
3.2 Installation Summary 15
3.3 Location Selection 17
3.4 Drilling Wall Opening 19
3.5 Refrigerant Pipe & Drain Hose Installation 21
3.6 Electrical Wiring 25
3.7 Wrap Piping & Cables 26
3.8 Mount Indoor Unit 27

4 OUTDOOR UNIT INSTALLATION 29

4.1 Location Selection 29
4.2 Drain Joint Installation 30
4.3 Anchor Outdoor Unit 31
4.4 Signal & Power Cable Connection 32
4.5 Refrigerant Piping Connection 33

5 POST-INSTALLATION 35

5.1 Electrical & Gas Leak Checks 35
5.2 Test Run 36
5.3 Care & Maintenance 37
5.4 Troubleshooting 39
5.5 Error Display (Indoor Unit) 41
5.6 Error Display (Outdoor Unit with Auxiliary Board) 42
5.7 Quick Maintenance by Error Code 43



This marking indicates that this product should not be disposed with other household wastes throughout North America. To prevent possible harm to the environment or human health from uncontrolled waste disposal, recycle it responsibly to promote the sustainable reuse of material resources. To return your used device, please use the return and collection systems or contact the retailer where the product was purchased. They can take this product for environmental safe recycling.

Safety Precautions

Read Before Using

Incorrect usage may cause serious damage or injury.

The symbols below are used throughout this manual to indicate instructions that should be followed closely or actions that should be avoided to prevent death, injury, and/or property damage.

WARNING	Indicates the possibility of personal injury or loss of life.
CAUTION	Indicates the possibility of property damage or serious consequences.

WARNING FOR PRODUCT INSTALLATION

INSTALLATION MUST BE PERFORMED BY AN AUTHORIZED DEALER OR SPECIALIST. DEFECTIVE INSTALLATION CAN CAUSE WATER LEAKAGE, ELECTRICAL SHOCK, OR FIRE.

******ELECTRICAL WORK MUST BE COMPLETED BY A QUALIFIED ELECTRICAL TECHNICIAN******

- ⊘ ***DO NOT*** **install the unit in a location that may be exposed to combustible gas leaks. If combustible gas accumulates around the unit, it could cause fire.**
- ⊘ ***DO NOT*** **turn on the power until the installation and all work has been completed.**

1. Installation must be performed according to the installation instructions. Improper installation could cause water leakage, electrical shock, or fire.
2. Contact an authorized service technician for repair or maintenance of this unit.
3. This appliance must be installed in accordance with national wiring regulations.
4. Only use the included accessories, parts, and specified parts for installation. Using non-standard parts can cause water leakage, electrical shock, fire, and/or failure of the unit.
5. Install the unit in a firm location that can support the unit's weight. If the location cannot support the unit's weight, or the installation is not done properly, the unit may drop and cause serious injury and damage.
6. Install the drainage piping according to the instructions in this manual. Improper drainage could cause water damage to your home and/or property.
7. When moving or relocating the air conditioner, consult experienced service technicians for disconnection and re-installation of the unit.
8. For detailed information of how to install the indoor and outdoor units to their respective supports, please refer to the indoor unit installation and outdoor unit installation sections of this manual.
9. USB device access, replacement, and maintenance operations must be carried out by professional staff.

WARNING FOR CLEANING & MAINTENANCE

1. **DO NOT** clean the unit with excessive amounts of water.
2. **DO NOT** clean the unit with combustible cleaning agents, as these could cause deformation and/or fire.
3. Turn off the device and disconnect the power before cleaning. Failure to do this could result in electrical shock.

TAKE NOTE OF FUSE SPECIFICATIONS

- The unit's circuit board (PCB) is designed with a fuse to provide over-current protection.
- The specifications of the fuse are printed on the circuit board, examples of such are T5A/250VAC and T10A/250VAC.

Note: Only a blast-proof ceramic fuse can be used.

1 SAFETY

WARNING FOR PRODUCT USE

- ⊘ ***DO NOT*** **insert fingers, rods, or other objects into the air inlet or outlet. This could cause injury, since the fan may be rotating at high speeds.**
- ⊘ ***DO NOT*** **use flammable sprays such as hair spray, lacquer or paint near the unit, as this could cause fire and/or an explosion.**
- ⊘ ***DO NOT*** **operate the unit in places near or around combustible gases. Emitted gas may collect around the unit and cause an explosion.**
- ⊘ ***DO NOT*** **allow children to play with the appliance. Children must be supervised around the unit at all times.**
- ⊘ ***DO NOT*** **operate the unit in a room where it could be exposed to excessive amounts of water, such as a bathroom or laundry room. Exposure to excessive water amounts can cause the electrical components to short circuit.**
- ⊘ ***DO NOT*** **expose your body directly to direct cool airflow from the unit for a prolonged period of time.**

1. If the unit operates abnormally (emits strange noises or a burning smell), immediately turn off the unit and disconnect the power in order to avoid electric shock, fire, and/or injury. Call your local dealer, or MRCOOL® tech support at (270) 366-0457, for further assistance.
2. If the air conditioner is used together with burners or other heating devices, thoroughly ventilate the room in order to avoid an oxygen deficiency.
3. In certain functional environments (such as kitchens and server rooms etc.), the use of specially designed air-conditioning units is highly recommended.
4. This appliance is not intended for use by persons(including children) with reduced physical, sensory or mental capabilities, or lack of experience and knowledge, unless they have been given supervision or instruction concerning use of the appliance by a person responsible for their safety. Children should be supervised to ensure that they do not play with the appliance.
5. Turn off the unit and disconnect the power before performing any cleaning, installation, or repairing. Failure to do so can cause electric shock.

CAUTION

- ⊘ ***DO NOT*** **allow the air conditioner to operate for extended periods of time with the doors or windows open, or in very high humidity.**
- ⊘ ***DO NOT*** **operate the air conditioner with wet hands, as this could cause electric shock.**
- ⊘ ***DO NOT*** **use device for any other purpose than its intended use.**
- ⊘ ***DO NOT*** **climb onto or place objects on top of the outdoor unit.**

1. Make sure that water condensation can drain smoothly and unhindered from the unit.
2. Turn off the unit and disconnect the power if the unit will not be used for an extended period of time.
3. Turn off and unplug the unit during storms.

ELECTRICAL WARNINGS

******ELECTRICAL WORK MUST BE COMPLETED BY A QUALIFIED ELECTRICAL TECHNICIAN******

- ⊘ ***DO NOT*** **share the power supply with other appliances. An improper or insufficient power supply could cause fire and/or electrical shock.**

1. Only use the specified wire. If the wire is damaged, it must be replaced by the manufacturer, its service agent or similarly qualified persons in order to avoid a hazard.
2. The product must be properly grounded during installation or electrical shock could occur.
3. Appropriate wiring standards, regulations, and the installation manual must be followed for all electrical work.
4. If connecting power to fixed wiring, an all-pole disconnection device must be incorporated in the fixed wiring in accordance with the wiring rules and must meet the following requirements: at least 3 mm of clearances in all poles, a leakage current that may exceed 10 mA, and a residual current device (RCD) having a rated residual operating current not exceeding 30 mA.
5. Connect cables tightly and clamp them securely to prevent external forces from damaging the terminal.

ELECTRICAL WARNINGS

Improper electrical connections could overheat, causing fire and/or electrical shock.

5. All electrical connections must be made according to the Electrical Connection Diagram located on the panels of the indoor and outdoor units.
6. All wiring must be properly arranged to ensure that the control board cover can close properly. If the control board cover is not properly closed, it can lead to corrosion and cause the connection points on the terminal to heat up, catch fire, or cause electrical shock.
7. Disconnection must be incorporated in the fixed wiring in accordance with the wiring rules.

FLAMMABLE REFRIGERANT WARNINGS

1. The installation of pipe-work should be kept to a minimum and should be protected from physical damage.
2. Refrigerant pipes should comply with national gas regulations.
3. All mechanical connections and ventilation openings should be kept clear of obstruction.
4. Utilize proper disposal processes based on national regulations.
5. Any person involved with working on or breaking into a refrigerant circuit should hold a current valid certificate from an industry-accredited assessment authority, which authorizes their competence to handle refrigerants safely in accordance with an industry recognized assessment specification.
6. Maintenance and repair requiring the assistance of other skilled personnel shall be carried out under the supervision of the person competent in the use of flammable refrigerants.
7. Do not use any means to accelerate the defrosting process or to clean, other than those recommended by the manufacturer.
8. The appliance shall be stored in a room without continuously operating ignition sources (for example: open flames, an operating gas appliance, or an operating electric heater).
9. Do not allow foreign matter (oil, water, etc.) to enter the piping, and securely seal the opening by pinching, taping, etc.
10. Do not pierce or burn.
11. Refrigerants may not contain an odor.
12. Working procedures that affect safety should only be carried out by competent persons.
13. The unit should be stored in a well-ventilated area where the room size corresponds to the room area as specific for operation, and should be stored so as to prevent potential mechanical damage from occurring.
14. Joints should be tested with detection equipment with a capability of 5 g/year of refrigerant or better, with the equipment in standstill and under operation or under a pressure of at least these standstill or operation conditions after installation. Detachable joints should NOT be used in the indoor side of the unit (brazed, welded joint could be used).
15. A leak detection system is installed. The unit must be powered except for service. For units with a refrigerant sensor, the indoor unit will display an error code and emit a buzzing sound, the compressor of the outdoor unit will immediately stop, and the indoor fan will start running. The service life of the refrigerant sensor is 15 years. When the refrigerant sensor malfunctions, the indoor unit will display the error code "FHCC". The refrigerant sensor cannot be repaired and can only be replaced by the manufacturer. It should only be replaced with the sensor specified by the manufacturer.
16. When a flammable refrigerant is used, the requirements for installation space of the appliance and/or ventilation requirements are determined according to:
    - The mass charge amount (M) used in the unit.
    - The installation location.
    - The type of ventilation of the location of the unit.
    - Piping material, pipe routing, and installation must include protection from physical damage in operation and service. This must be in compliance with local codes and standards, such as ASHRAE 15, IAPMO Uniform Mechanical Code, ICC International Mechanical Code, or CSA B52. All field joints must be accessible for inspection prior to being covered or enclosed.
    - Protection devices, piping and fittings must be protected as much as possible against adverse environmental effects. For example, against the danger of water collecting and freezing in relief pipes or against accumulation of dirt or debris.

FLAMMABLE REFRIGERANT WARNINGS

- Piping in refrigeration systems must be designed and installed to minimize the likelihood of hydraulic shock, resulting in damage from the system.
- Steel pipes and components must be protected against corrosion with a rust-proof coating before applying insulation.
- Precautions must be taken against excessive vibration or movement of the unit.
- The minimum floor area of the room must be mentioned in the form of a table or a single figure without reference to a formula.

17. After completion of field piping for split systems, the field pipework should be pressure tested with an inert gas and then vacuum tested prior to refrigerant charging, according to the following requirements:
    - The minimum test pressure for the low side of the system should be the low side design pressure and the minimum test pressure for the high side of the system should be the high side design pressure, unless the high side of the system cannot be isolated from the low side of the system in which case the entire system should not be pressure tested to the low side design pressure.
    - The test pressure after removal of pressure source shall be maintained for at least 1 hour with no decrease of pressure indicated by the test gauge, with test gauge resolution not exceeding 5% of the test pressure.
18. Prior to beginning work on systems containing flammable refrigerants, safety checks are necessary to ensure that the risk of ignition is minimized. For repairs to the refrigerating system, the following precautions shall be complied with prior to conducting work on the system.
19. Work should be undertaken under a controlled procedure so as to minimize the risk of a flammable gas or vapor being present while the work is being performed.
20. All maintenance staff and others working in the local area should be instructed on the nature of work being carried out. Avoid work in confined spaces.
21. The area should be checked with an appropriate refrigerant detector prior to and during work, to ensure the technician is aware of potentially flammable atmospheres. Ensure that the leak detection equipment being used is suitable for use with flammable refrigerants, i.e. no sparking, adequately sealed, or intrinsically safe.
22. If any hot work is to be conducted on the refrigeration equipment or any associated parts, appropriate fire extinguishing equipment should be on site and readily available. Have a dry power or CO2 fire extinguisher adjacent to the charging area.
23. No person carrying out work in relation to a refrigerating system which involves exposing any pipe work should use any sources of ignition in such a manner that it may lead to the risk of fire or explosion. All possible ignition sources, including cigarette smoking, should be kept sufficiently far away from the site of installation, repairing, removing, and disposal, during which refrigerant can possibly be released to the surrounding space. Prior to work taking place, the area around the equipment is to be surveyed to make sure that there are no flammable hazards or ignition risks. "No Smoking" signs should be displayed.
24. Ensure that the area is in the open or that it is adequately ventilated before breaking into the system or conducting any hot work. A degree of ventilation shall continue during the period that the work is carried out. The ventilation should safely disperse any released refrigerant and preferably expel it externally into the atmosphere.
23. Where electrical components are being changed, they shall be fit for the purpose and to the correct specification. At all times the manufacturer's maintenance ad service guidelines shall be followed. If in doubt, consult the manufacturer's technical department for assistance. The following checks should be applied to installations using flammable refrigerants:
    - the actual refrigerant charge is in accordance with the room size within which the refrigerant containing parts are installed;
    - the ventilation machinery and outlets are operating adequately and are not obstructed;
    - if an indirect refrigerating circuit is being used, the secondary circuits should be checked for the presence of refrigerant;
    - marking to the equipment continues to be visible and legible, marking and signs that are illegible should be corrected;
    - refrigerant pipe or components are installed in a position where they are unlikely to be exposed to any substance which may corrode refrigerant containing components, unless the components are constructed of materials which are inherently resistant to or protected against corrosion.

FLAMMABLE REFRIGERANT WARNINGS

24. Repair and maintenance to electrical components shall include initial safety checks and component inspection procedures. If a fault exists that could compromise safety, then no electrical supply shall be connected to the circuit until it is satisfactorily dealt with. If the fault cannot be corrected immediately but it is necessary to continue operation, an adequate temporary solution should be used.
25. Initial safety checks should include:
    - that capacitors are discharged: this should be done in a safe manner to avoid the possibility of sparking;
    - that there are no live electrical components and wiring are exposed while charging, recovering, or purging the system;
    - that there is continuity of earth bonding.
26. Sealed electrical components should be replaced if damaged.
27. Intrinsically safe components should be replaced if damaged.
28. Check that wiring will not be subject to wear, corrosion, excessive pressure, vibration, sharp edges, or any other adverse environmental effects. The check shall also take into account the effects of aging or continual vibration from sources such as compressors or fans.
29. Under no circumstances should potential sources of ignition be used in the search for or detection of refrigerant leaks. A halide torch (or any other detector using a naked flame) should not be used. The following leak detection methods are deemed acceptable for refrigerant systems. Electronic leak detectors may be used to detect refrigerant leaks but, in the case of flammable refrigerants, the sensitivity may not be adequate, or may need re-calibration. (Detection equipment shall be calibrated in a refrigerant-free area.) Ensure that the detector is not a potential source of ignition and is suitable for the refrigerant used. Leak detection equipment shall be set at a percentage of the LFL of the refrigerant and should be calibrated to the refrigerant employed, and the appropriate percentage of gas (25% minimum) is confirmed. Leak detection fluids are also suitable for use with most refrigerants but the use of detergents containing chlorine may react with the refrigerant and corrode the copper work. Examples of leak detection fluids are the bubble method, fluorescent method agents, etc. If a leak is suspected, all naked flames should be removed/extinguished. If a leakage of refrigerant is found which requires brazing, all of the refrigerant should be recovered from the system, or isolated (by means of shut-off valves) in a part of the system remote from the leak. See the following instructions of removal of refrigerant.
30. When breaking into the refrigerant circuit to make repairs, or for any other purpose, conventional procedures should be used. However, for flammable refrigerants, it is even more vital to follow best practice. The following procedure should be adhered to:
    - safely remove refrigerant following local and national regulations;
    - evacuate;
    - purge the circuit with inert gas;
    - evacuate;
    - continuously flush or purge with inert gas when using flame to open circuit;
    - open the circuit
31. The refrigerant charge should be recovered into the correct recovery cylinders if venting is not allowed by local and national codes. For units containing flammable refrigerants, the system should be purged with oxygen-free nitrogen to render the appliance safe for flammable refrigerants. This process might need to be repeated several times. Compressed air or oxygen shall not be used for purging refrigerant systems. For appliances containing flammable refrigerants, refrigerant purging should be achieved by breaking the vacuum in the system with oxygen-free nitrogen and continuing to fill the working pressure is achieved, then venting to atmosphere, and finally pulling down to a vacuum. This process should be repeated until no refrigerant is within the system. When the final oxygen-free nitrogen charge is used, the system should be vented down to atmospheric pressure to enable work to take place. The outlet for the vacuum pump should not be close to any potential ignition sources, and ventilation should be available.
32. In addition to conventional charging procedures, the following requiremetns should be followed:
    - Work should be undertaken with appropriate tools only (in case of uncertainty, please consult the manufacturer of the tools for use with flammable refrigerants)
    - Ensure that contamination of different refrigerants does not occur when using charging equipment. Hoses or lines shall be as short as possible to minimize the amount of refrigerant contained in them.

FLAMMABLE REFRIGERANT WARNINGS

- Ensure that the refrigeration system is grounded prior to charging the system with refrigerant.
- Label the system when charging is complete (if not already).
- Extreme care should be taken not to overfill the refrigeration system.
- Prior to recharging the system, it should be pressure tested with oxygen-free nitrogen (OFN). The system should be leak-tested on completion of charging but prior to commissioning. A follow-up leak test shall be carried out prior to leaving the site.

33. Before carrying out this procedure, it is essential that the technician is completely familiar with the equipment and all its detail. It is good recommended practice that all refrigerants are recovered safely. Prior to the task being carried out, an oil and refrigerant sample should be taken in case analysis is required prior to re-use of recovered refrigerant. It is essential that electrical power is available before the task is commenced.
    a. Become familiar with the equipment and its operation.
    b. Isolate the system electrically.
    c. Before attempting the procedure ensure that:
        - mechanical handling equipment is available, if required, for handling refrigerant cylinders;
        - all personal protective equipment is available and being used correctly;
        - the recovery process is supervised at all times by a competent person;
        - recovery equipment and cylinders conform to the appropriate standards

    Pump down refrigerant system, if possible.
    e. If a vacuum is not possible, make a manifold so that refrigerant can be removed from various parts of the system.
    f. Make sure that the cylinder is situated on the scales before recovery takes place.
    g. Start the recovery machine and operate in accordance with instructions.
    h. Do not overfill cylinders (no more than 80% volume liquid charge).
    i. Do not exceed the maximum working pressure of the cylinder, even temporarily.
    j. When the cylinders have been filled correctly and the process completed, make sure that the cylinders and equipment are removed from the site promptly and all isolation valves on the equipment are closed off.
    k. Recovered refrigerant should not be charged into another refrigeration system unless it has been cleaned and checked.
34. Equipment shall be labeled stating that it has been decommissioned and emptied of refrigerant. The label should be dated and signed. For appliances containing flammable refrigerants, ensure that there are labels on the equipment stating the equipment contains flammable refrigerant.
35. When removing refrigerant from a system, either for servicing or decommissioning, it is good recommended practice that all refrigerants are removed safely. When transferring refrigerant into cylinders, ensure that only appropriate refrigerant recovery cylinders are employed. Ensure that the correct number of cylinders for holding the total system charge is available. All cylinders to be used should be designated for the recovered refrigerant and labeled for that refrigerant (i.e. special cylinders for the recovery of refrigerant). Cylinders shall be complete with pressure-relief valve and associated shut-off valves in good working order. Empty recovery cylinders are evacuated and, if possible, cooled before recovery occurs. The recovery equipment should be in good working order with a set of instructions concerning the equipment that is at hand and should be suitable for the recovery of the flammable refrigerant. If in doubt, the manufacturer should be consulted. In addition, a set of calibrated weighing scales should be available and in good working order. Hoses should be complete with leak-free disconnect couplings and in good condition. The recovered refrigerant should be processed according to local legislation in the correct recovery cylinder, and the relevant waste transfer note arranged. Do not mix refrigerants in recovery units and especially not in cylinders.
36. If compressors or compressor oils are to be removed, ensure that they have been evacuated to an acceptable level to make certain that flammable refrigerant does not remain within the lubricant. The compressor body should not be heated by an open flame or other ignition sources to accelerate this process. When oil is drained from a system, it should be carried out safely.
37. An unventilated area where the appliance using flammable refrigerants is installed should be constructed so that should any refrigerant leak, it will nto stagnate so as to create a fire or explosion hazard. If appliances connected via an air duct system to one or more rooms below the ventilation requirements,

FLAMMABLE REFRIGERANT WARNINGS

that room should never contain potential ignition sources. A flame-producing device may be installed in the space if the device is provided with an effective flame arrest. Auxiliary devices which may be a potential ignition source should not be installed in the duct work. Examples of such are hot surfaces with a temperature exceeding 1292°F (700°C) and electric switching devices. Only auxiliary devices (such as a certified heater kit) approved by the manufacturer or declared suitable with the refrigerant should be installed in connecting ductwork. False or drop ceilings may be used as a return air plenum if a refrigerant detection system is provided in the appliance and any external connections are also provided with a sensor immediately below the return air plenum duct joint. Refrigerant sensors for refrigerant detection systems should only be replaced with sensors specified by the manufacturer. A leak detection system is installed. The unit must be powered except for service.

38. Transport of equipment containing flammable refrigerants should comply with transportation regulations.
39. Marking of equipment using signs should comply with local regulations.
40. Disposal of equipment using flammable refrigerants should comply with national regulations.
41. Storage of equipment/appliances should be in accordance with the manufacturer's instructions.
42. Storage of packed (unsold) equipment should be constructed so that mechanical damage to the equipment inside the package will not cause a leak of the refrigerant charge. The maximum number of pieces of equipment permitted to be stored together will be determined by local regulations.
43. During the evacuation test, after achieving a vacuum level specified in the manual or less, the refrigeration system shall be isolated from the vacuum pump and the pressure shall not rise above 1500 microns within 10 minutes. The vacuum pressure level should be specified in the manual, and should be the lessor of 500 microns of the value required for compliance with national and local codes and standards, which may vary between residential, commercial, and industrial buildings.
    - Field-made refrigerant joints indoors should be tightness-tested according to the following requirements: the test method should have a sensitivity of 5 grams per year of refrigerant or better under a pressure of at least 0.25 times the maximum allowable pressure. No leak should be detected.
    - Any servicing should be performed only as recommended by MRCOOL®.

43. Any maintenance, service, or repair operations must be performed by qualified personnel. Every working procedure that affects safety should only be carried out by competent persons that are both trained and certified. The training of these procedures should be carried out by national training organizations or manufacturers that are accredited to teach the relevant national competency standards that may be set in legislation. All training should follow the ANNEX HH requirements of UL 60334-2-40 4th Edition.
    Examples of such working procedures are:
    - breaking into a refrigerant circuit
    - opening of sealed components
    - opening of ventilated enclosures

Symbols Displayed on Indoor & Outdoor Unit		
	**WARNING**	This symbol shows that this appliance uses a flammable refrigerant. If the refrigerant is leaked and exposed to an external ignition source, there is a risk of fire.
	**CAUTION**	This symbol shows that the operation manual should be read carefully.
	**CAUTION**	This symbol shows that a service personnel should be handling this equipment with reference to the installation manual.
	**CAUTION**	
	**CAUTION**	This symbol shows that information is available such as the operating manual or installation manual.

2 UNIT OVERVIEW

2.1 Packing List

This system comes with the following accessories. Use all of the installation parts and accessories to install the unit. Improper installation may result in water leakage, electrical shock and fire, or cause the equipment to fail. The items that are not included with the air conditioner must be purchased separately.

PART	LOOKS LIKE	QUANTITY
Manuals		**2 (Installation & Remote)**
Mounting Plate & Template	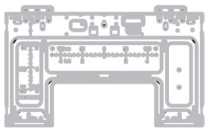	**1** *1- Metal Mounting Plate* *1 - Cardboard Template*
Remote Control	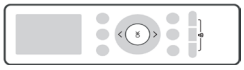	**1**
Drain Pipe		**1**
Anchor		**5-8 each (Packaged Together)**
Mounting Plate Fixing Screw		
Smart Controller Kit		**1**
DIYPRO® Cable		**1**
Small Filter *(To be installed on the back of the main air filter by an authorized technician during installation.)*	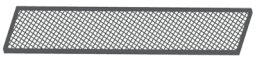	**1-2**
Allen Wrench		**1**
Non-Adhesive Tape		**1**

PART	LOOKS LIKE	QUANTITY
AAA Battery	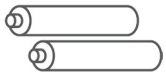	**2**
Remote Control Holder		**1**
Fixing Screw for Remote Control Holder	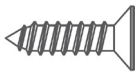	**2**
Insulation Sleeve	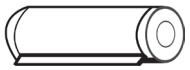	**2**
Sound-Absorbent Pads	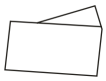	**2**
Seal		**1**
Drain Joint		**1**
Plastic Wall Sleeve & Cap	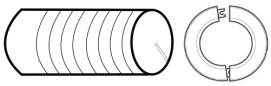	**1**
Quick Connect® Line Set	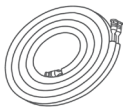	**1**
Neoprene		**1**

2.2 Indoor Unit Display

Only use compatible modules certified for use with the model. Refer to the Electric Auxiliary Heat Model specification for additional details to ensure proper selection and installation.

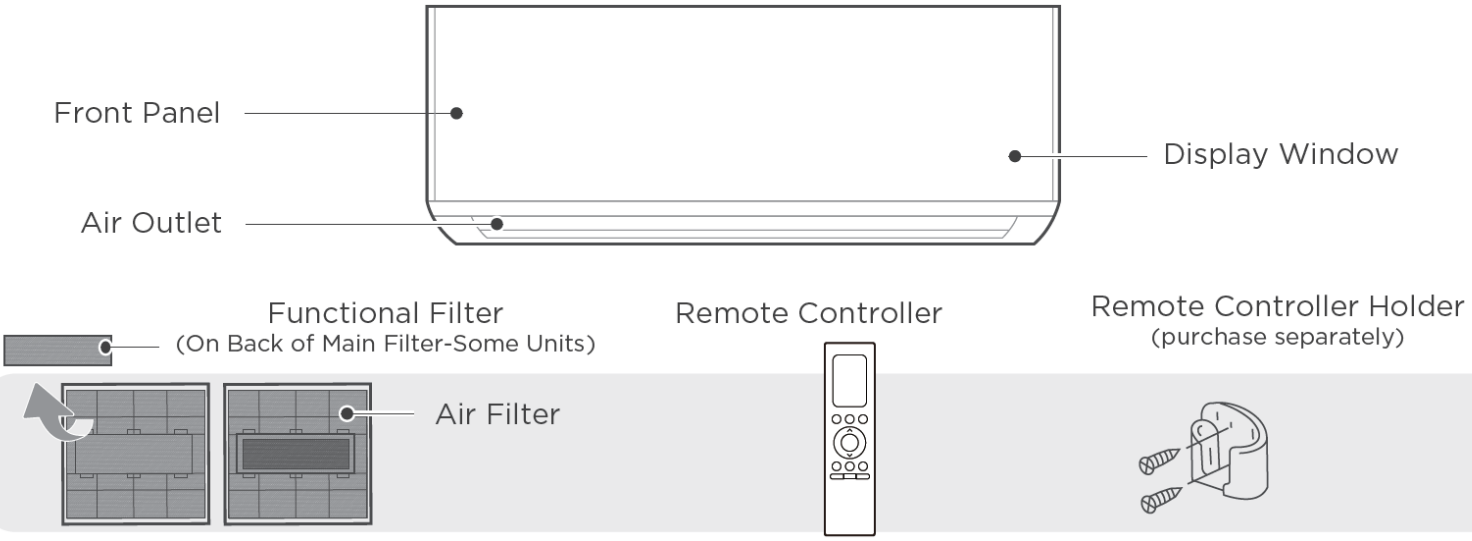

Display Code	Display Code Meaning
	• When Wireless Control feature is activated (For APP control units)
	• Displays temperature, operation feature and Error codes:
 *(for 3 seconds)*	• TIMER ON is set (if the unit is OFF, "" remains on when TIMER ON is set). • SWING, TURBO or SILENCE feature is turned on.
 *(for 3 seconds)*	• TIMER OFF is set. • SWING, TURBO or SILENCE feature is turned off.
	• When defrosting.
	• When Active Clean feature is turned on.
	• When 46 F(8 C) heating feature is turned on.

2.3 Additional Functions

Note: When the unit is powered on, a buzzing sound will be heard to indicate that the unit has been powered on normally. If there is no sound, it is possible that there is a problem with the unit. If this happens, power off and then on again. Also, check the circuit. Check the indoor display and remote control for your unit.
(See the Remote Controller Manual for more features.)

Auto-Restart

In the event that there is a power loss, the unit will automatically restart with the prior settings once power has been restored.

Breeze Away

This feature avoids airflow from blowing directly on the body. The louver will set to a 35°angle. The fan will adjust to continue to maintain a cool atmosphere in the room.

Wireless Control(For App control units)

Allows you to control your air conditioner using your mobile phone and a wireless connection. For the USB device access, replacement, maintenance operations must be carried out by HVAC Technicians.

Active Clean function

The Active Clean Technology washes away dust when it adheres to the heat exchanger by automatically freezing and then rapidly thawing the frost. This operation is used to produce more condensed water to improve the cleaning effect, and the cold air will blow out. After cleaning, the internal wind wheel then keeps operating with hot air to blow-dry the evaporator, thus keeping the inside clean. When this function is turned on, the indoor unit display window appears “CL ”, after 20 to 45 minutes, the unit will turn off automatically and cancel the Active Clean function.

Louver Angle Memory

When turning on your unit, the louver will automatically resume its former angle.

Heat Exchanger Dust Removal Function

This feature helps keep the outdoor coil cleaner and may extend the duration between regular maintenance intervals depending on local conditions. When the unit is turned off, a 10 second delay occurs then the outdoor fan runs in reverse rotation for 70 seconds. This will blow off loose accumulated dust and debris.

Refrigerant Leakage Detection

When the system detects a malfunction of the refrigerant, the indoor unit will automatically display the following error codes:

“EL0C (System lacks refrigerant)” ,

“EHC1 (Refrigerant sensor detects leakage)”,

“EHC2 (Working condition of the refrigerant sensor is out of range and leakage is detected)”, “EHC3(Working condition of the refrigerant sensor is out of range)”, or

“ECC1 (Other indoor unit refrigerant sensor detects leakage (Multi-zone)”.

When “EHC1” or “EHC2” error occurs, the buzzer will continue to beep for 5 to 6 minutes before stopping. You can also press any button on the remote controller to stop the buzzer.

Note: Error codes of “EHC1”, “EHC2”,“EHC3” and “ECC1” are only applicable to the units with refrigerant sensor.

Sleep Operation

The SLEEP function is used to maximize energy usage while you sleep (and don’t need the same temperature settings to stay comfortable). When in COOL mode, press the SLEEP button on remote control. The unit will increase the temperature by 2°F (1°C) after 1 hour, and will increase an additional 2°F (1°C) after another hour. When in HEAT mode, the unit will decrease the temperature by 2°F (1°C) after 1 hour, and will decrease an additional 2°F (1°C) after another hour.

The sleep feature will stop after 8 hours and the system will keep running with final temperature setting.

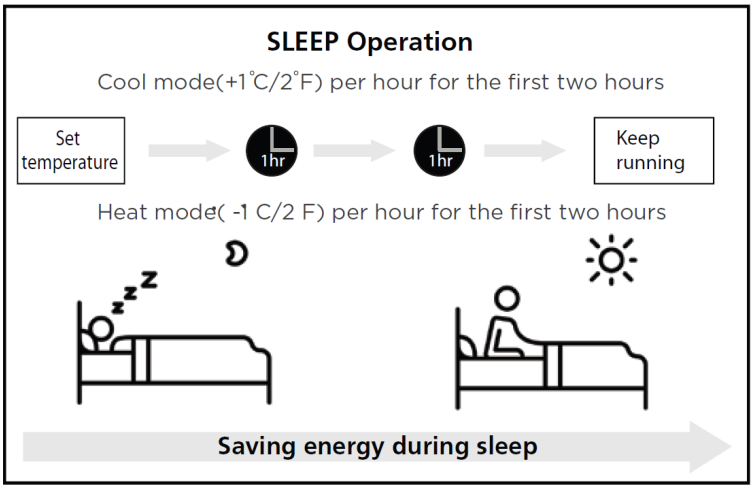

2.4 Setting Angle of Airflow

Note on Louver Angles

When using COOL of DRY mode, do not set louver at too vertical of an angle for long periods of time. This will cause the water to condense, which will result in water dropping below the unit.

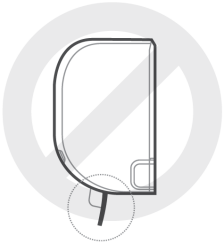

When using COOL or HEAT mode, setting the louver at to small an angle can reduce the performance of the unit due to restricted air flow.

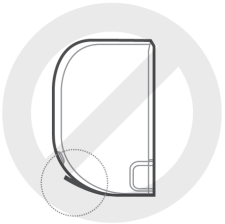

Set the vertical air flow louver to it's maximum angle according to the relative standards requirement under heating capacity test.

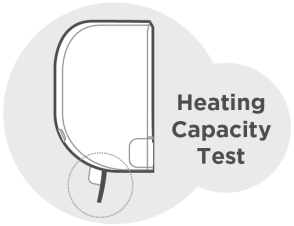

Note: While the unit is on, use the SWING/DIRECT button (Located on the remote control) to set the direction, or vertical angle, of airflow. Please refer to the Remote Control Manual for details.

Do not manually move the louver. To reset the louver, turn off the unit and disconnect from power.

Setting Horizontal Angle of Airflow

The horizontal angle of the airflow must be set manually. To adjust, grip the deflector rod and set it to the preferred position.

The horizontal angle of the airflow can also be set by remote control. (Refer to the Remote Control Manual for instructions.)

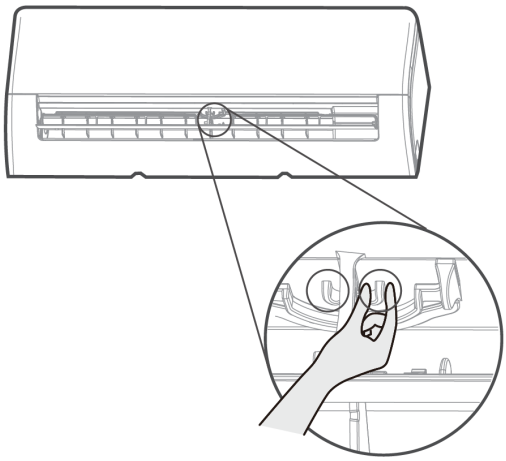

! CAUTION

DO NOT put your fingers in or near the blower and suction side of the unit. The high-speed fan inside the unit may cause injury.

2.5 Manual Operation

To Operate the Unit Manually:

1. Open the front panel of the air handler. **Note:** If there is a supporting rod located on the left or right side, use that to secure to panel.
2. Locate the MANUAL CONTROL button on the right-hand side of the unit.
3. Press the MANUAL CONTROL button one time to activate FORCED AUTO mode.
4. Press the MANUAL CONTROL button again to activate FORCED COOLING mode.
5. Press the MANUAL CONTROL button a third time to turn the unit off.
6. Release the supporting rod (if included), then close the front panel.

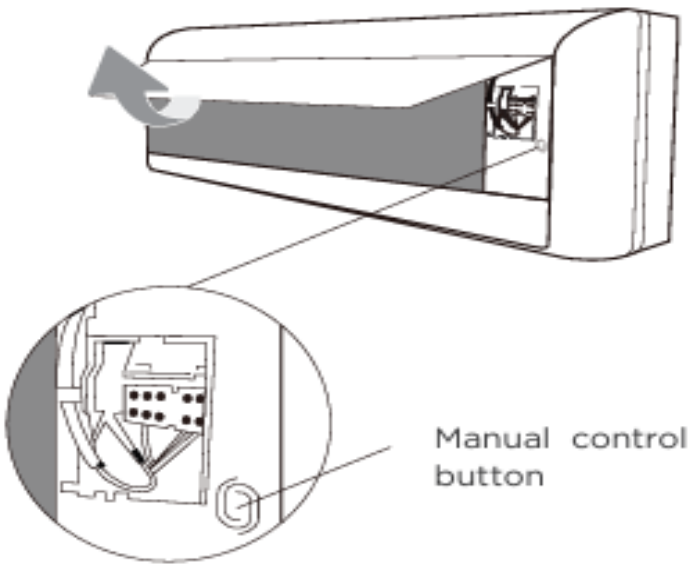

! CAUTION

The manual button is intended for testing purposes and emergency operation only. Please do not use this function unless the remote control is unavailable. To restore regular operation, use the remote control to activate the unit. The unit must be turned off before manual operation.

2.6 Packing & Unpacking the Unit

Unpacking the Indoor Unit

1. Cut the sealing tape on the carton on the left, one cut in the middle, and one cut on the right.
2. Use a vice to take out the sealing nails on the top of the carton.
3. Open the carton.
4. Take out the middle support plate if it is included.
5. Take out the accessory package, then take out the connecting wire (if included).
6. Lift the machine out of the carton and lay it flat.
7. Remove the packing foam, and untie the packaging bag.

Unpacking the Outdoor Unit

1. Cut the packing belt.
2. Take the unit out of the carton.
3. Remove the foam from the unit.
4. Remove the packaging bag from the unit.

Packing the Indoor Unit

1. Place the indoor unit into the packing bag.
2. Attach the packing foam to the unit.
3. Place the unit into the carton, then add the accessory package.
4. Close the carton can seal it with packing tape.
5. Use the packing belt, if necessary.

Packing the Outdoor Unit

1. Place the outdoor unit into the packing bag.
2. Inset the packing foam into the box.
3. Place the unit into the carton, then put the upper packing foam on the unit.
4. Close the carton and seal it with packing tape.
5. Use the packing belt, if necessary.

3.1 Installation Overview

Note: Illustrations in this manual are for explanatory purposes. The shape of your actual unit may be slightly different.

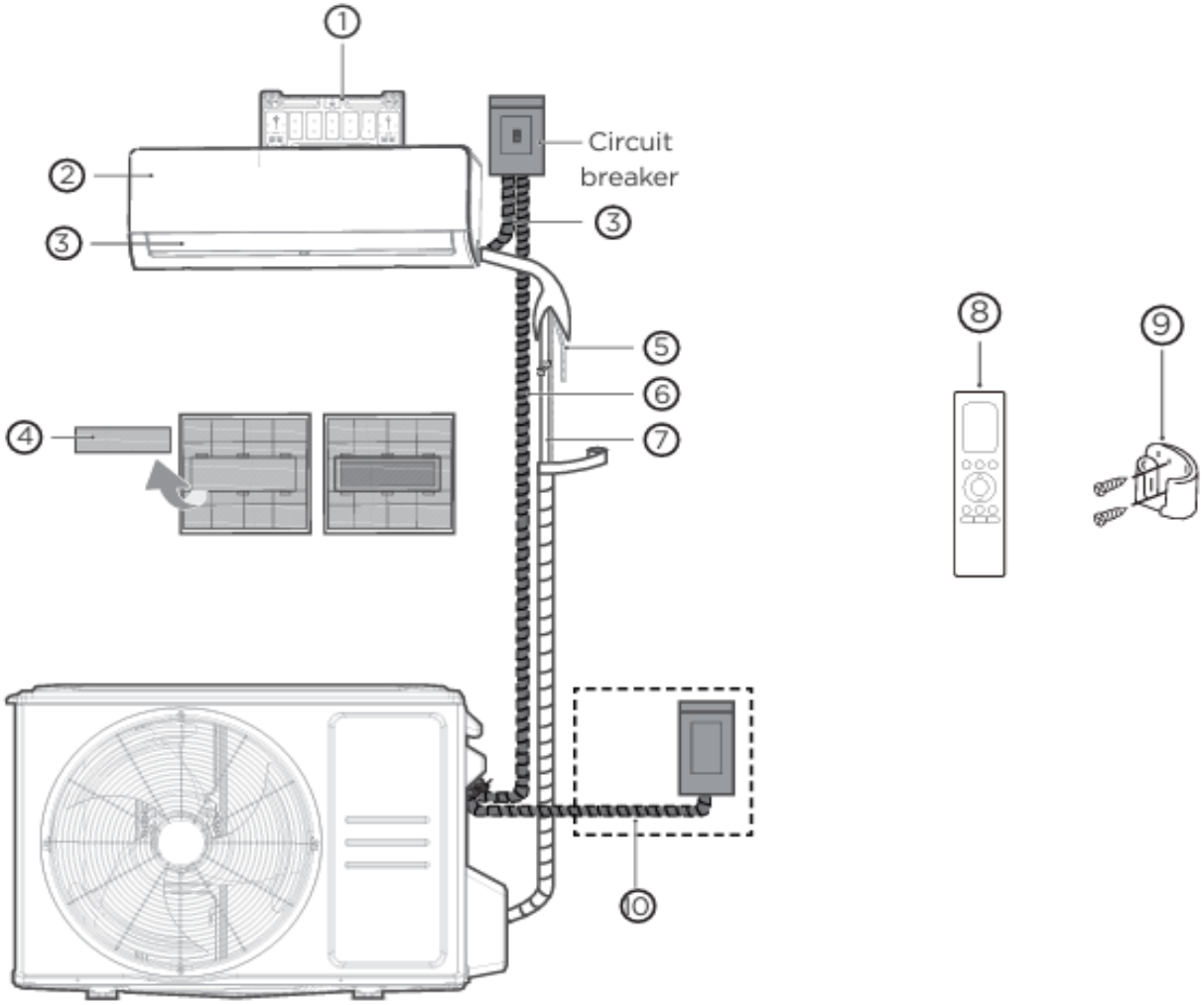

1. Wall Mounting Plate
2. Front Panel
3. Louver
4. Air Filter
5. Drain Pipe (purchase separately)
6. Connection Cable (purchase separately).
7. Refrigerant Piping (purchase separately).
8. Remote Control
9. Remote Control Holder (purchase separately)
10. Outdoor Unit Power Cable (purchase separately)

Tools NOT Included:



Gloves | Screwdriver & wrench | Hammer drill | Core drill | Goggles & masks | Vinyl tape

3.2 Installation Summary

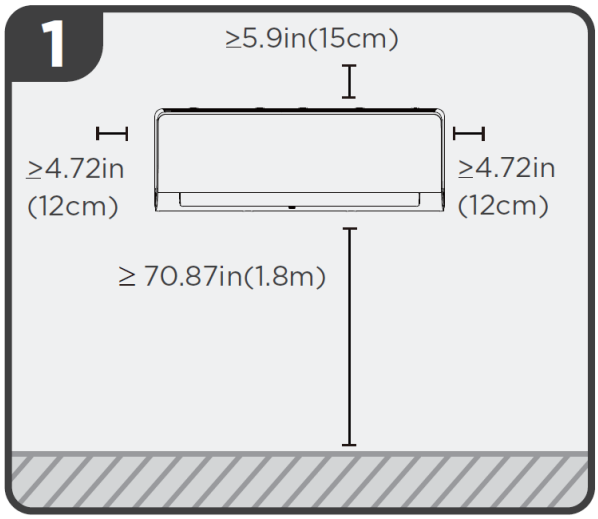

Select Installation Location

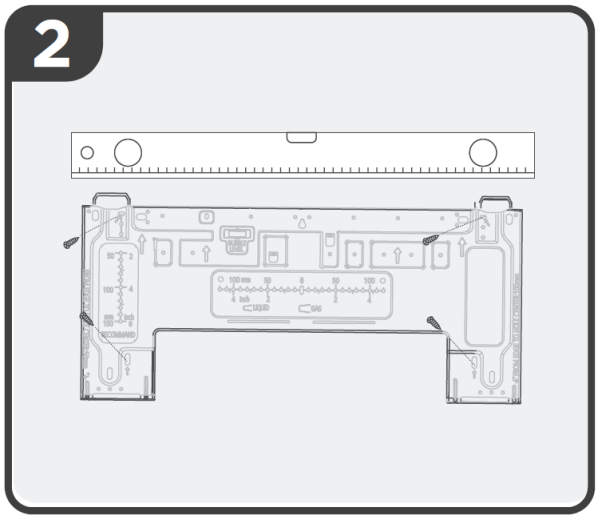

Attach Mounting Plate

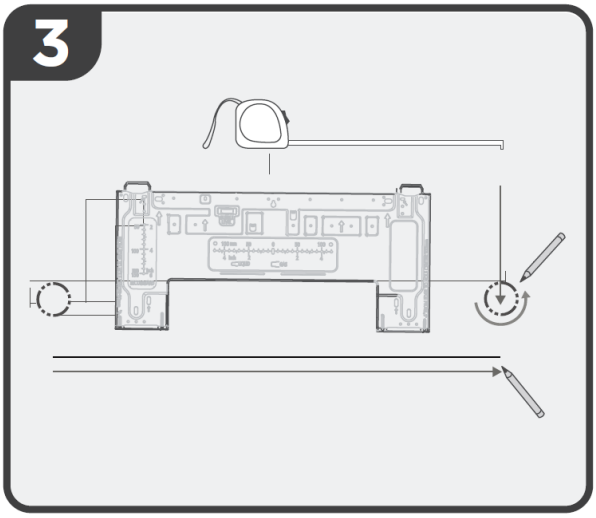

Determine Wall Hole Position

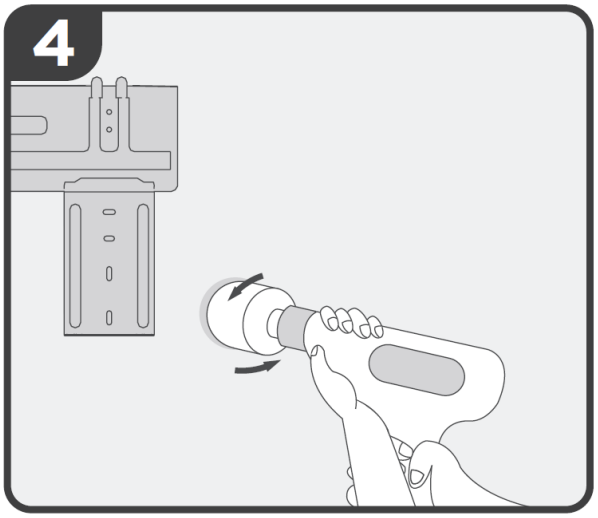

Drill Wall Hole

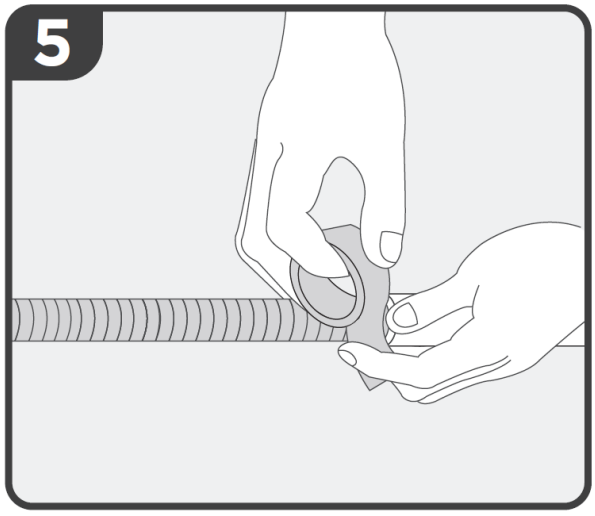

Prepare Drain Hose

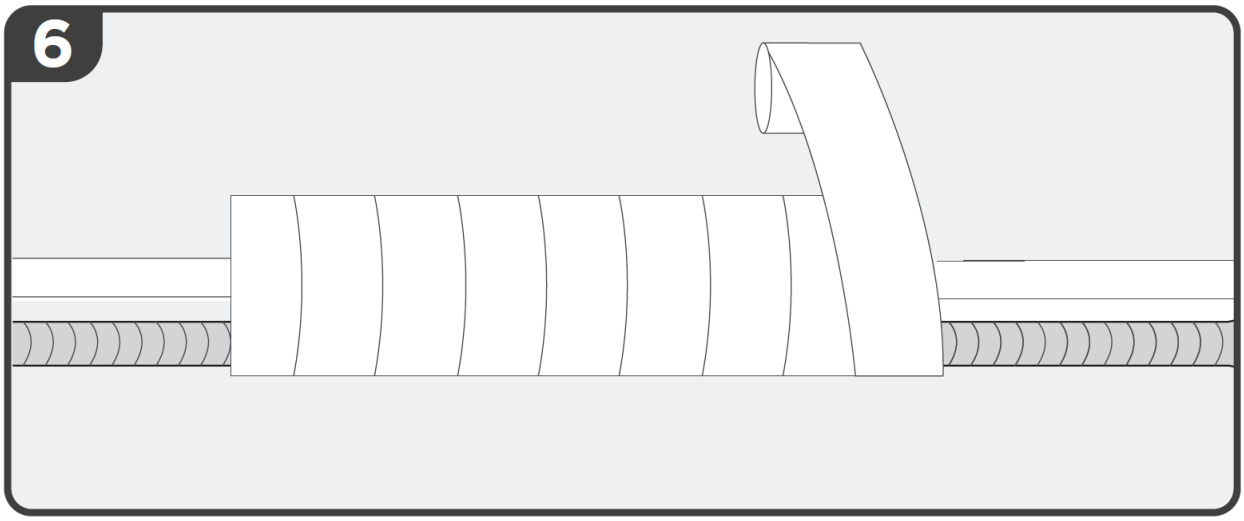

Wrap Piping and drain hose

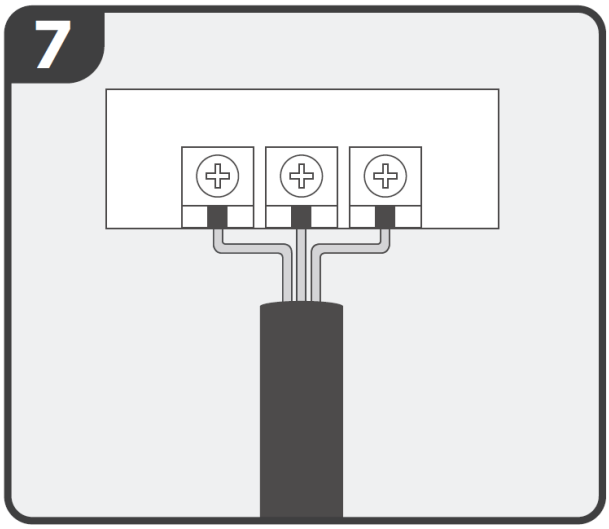

Connect Wiring

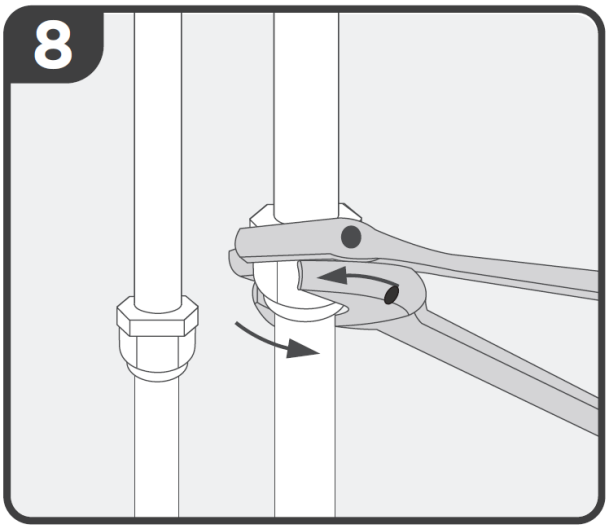

Connect Piping

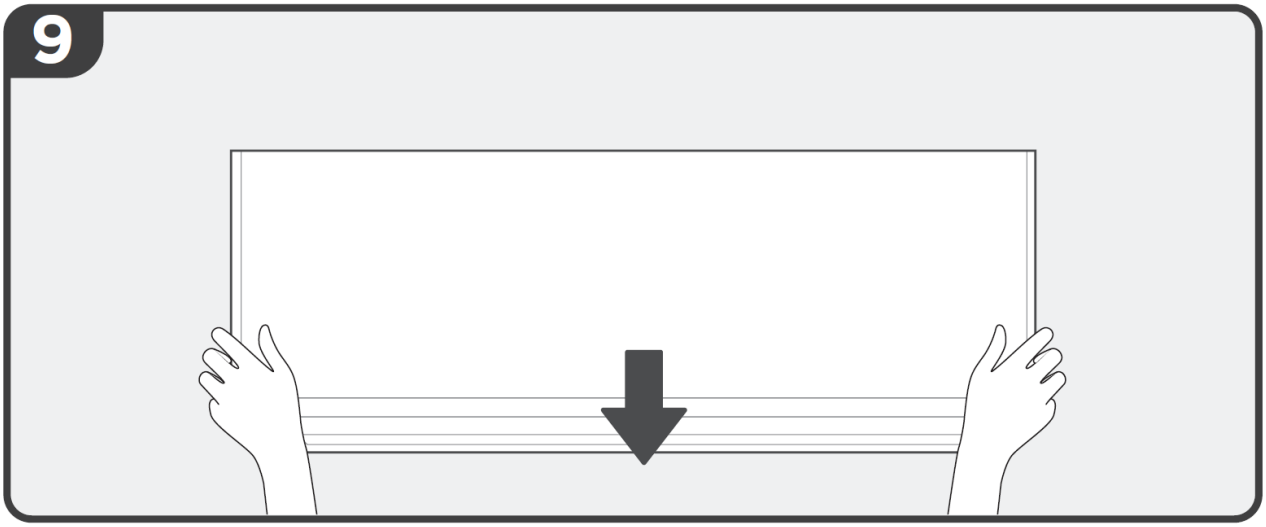

Mount Indoor Unit

3.3 Installation Location

Note: Before you begin installation, refer to the label on the product box to make sure that the model number of the indoor unit matches the model number of the outdoor unit.

The following standards will help you choose an appropriate location for the unit. Proper installation must meet the following specifications:



☑ Good air circulation

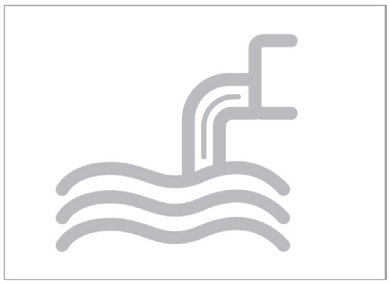

☑ Convenient drainage



☑ Noise from the unit will not disturb other people.



☑ Firm and solid—the location will not vibrate

☑ Strong enough to support the weight of the unit

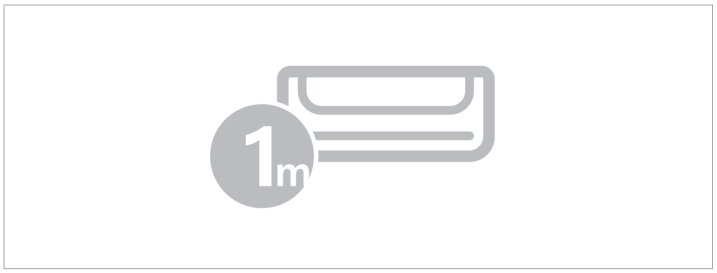

☑ A location at least one meter from all other electrical devices (e.g., TV, radio, computer)

Do NOT install the unit in the following locations:

- ⊘ Near any source of heat, steam, or combustible gas.
- ⊘ Near flammable items such as curtains or clothing.
- ⊘ Near any obstacle that might block air circulation.
- ⊘ Near a doorway.
- ⊘ In a location that is subject to direct sunlight.

Note for Product Installation:

When choosing a location, be aware that you should leave ample room for a wall hole (see steps for drilling a wall hole for connecting piping) for the signal cable and refrigerant piping that connect the indoor and outdoor units. The default position for all piping is the right side of the indoor unit (when facing the unit).

For R454B Refrigerant Charge Amount and Minimum Room Area:

See below for unit refrigerant specifications. The indoor and outdoor units are designed to be used together. Double check for the correct specifications for your purchased unit. The indoor unit should be installed at least 6.0ft/1.8m above the floor. The height of the room cannot be less than 7.3ft/2.2m. The minimum room area of operation or storage should be according to the table below:

Amin [ft²/m²]	hinst[ft/m]					
mc or mREL [oz/kg]	6.0~7.3/ 1.8~2.2	7.6/2.3	7.9/2.4	8.6/2.6	9.2/2.8	9.9/3.0
<=62.6/1.776	12/1.10					
63.4/1.8	60/5.53	57/5.29	55/5.07	51/4.68	47/4.35	44/4.06
70.5/2.0	67/6.15	64/5.88	61/5.64	56/5.2	52/4.83	49/4.51
77.5/2.2	73/6.76	70/6.47	67/6.2	62/5.72	58/5.31	54/4.96
84.6/2.4	80/7.38	76/7.06	73/6.76	68/6.24	63/5.8	59/5.41
91.7/2.6	86/7.99	83/7.64	79/7.32	73/6.76	68/6.28	64/5.86
98.7/2.8	93/8.6	89/8.23	85/7.89	79/7.28	73/6.76	68/6.31
105.8/3.0	100/9.22	95/8.82	91/8.45	84/7.8	78/7.24	73/6.76
112.8/3.2	106/9.83	102/9.41	97/9.01	90/8.32	84/7.73	78/7.21
119.9/3.4	113/10.45	108/9.99	104/9.58	96/8.84	89/8.21	83/7.66
126.9/3.6	120/11.06	114/10.58	110/10.14	101/9.36	94/8.69	88/8.11
134/3.8	126/11.68	121/11.17	116/10.7	107/9.88	99/9.17	93/8.56
141.1/4.0	133/12.29	127/11.76	122/11.27	112/10.4	104/9.66	97/9.01
148.1/4.2	139/12.9	133/12.34	128/11.83	118/10.92	110/10.14	102/9.46
155.1/4.4	146/13.52	140/12.93	134/12.39	124/11.44	115/10.62	107/9.91
162.2/4.6	153/14.13	146/13.52	140/12.96	129/11.96	120/11.11	112/10.37
169.2/4.8	159/14.75	152/14.11	146/13.52	135/12.48	125/11.59	117/10.82
176.3/5.0	166/15.36	159/14.69	152/14.69	140/13	130/12.07	122/11.27

Area Formula:

Amin is the required minimum room area in ft²/m²
mc is the actual refrigerant charge in the system oz/kg
mREL is the refrigerant releasable charge in oz/kg (Applicable to the unit with the refrigerant sensor only.)
hinst is the height of the bottom of the appliance relative to the floor of the room after installation.

⚠WARNING

The minimum room area or minimum room area of conditioned space is based on releasable charge and total system refrigerant charge.

When the unit detects a refrigerant leak, the minimum airflow of the indoor unit is as follows:

Model	Indoor Unit	Outdoor Unit	Indoor Normal Air Volume	
9K (115V)	DIY-09-HP-WMAH-115D25-O	DIY-09-HP-C-115D25-O	540m³/h	318CFM
12K (115V)	DIY-12-HP-WMAH-115D25-O	DIY-12-HP-C-115D25-O	540m³/h	318CFM
18K	DIY-18-HP-WMAH-230D25-O	DIY-18-HP-C-230D25-O	800m³/h	470CFM
23K	DIY-24-HP-WMAH-230D25-O	DIY-24-HP-C-230D25-O	1000m³/h	588CFM
36K	DIY-36-HP-WMAH-230D25-O	DIY-36-HP-C-230D25-O	1000m³/h	588CFM

3.4 Drill Wall Opening

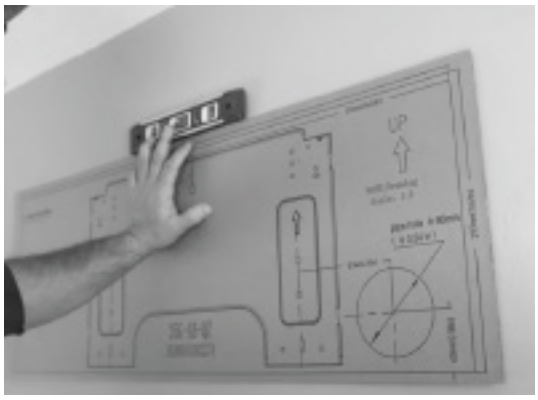

NOTE

A cardboard template of the mounting plate is included to aid in installation. It can be placed against the wall in place of the actual mounting plate before drilling into the wall.

Determining Wall Opening Location

Step 1:
Remove the screw that attaches the mounting plate to the back of the indoor unit.

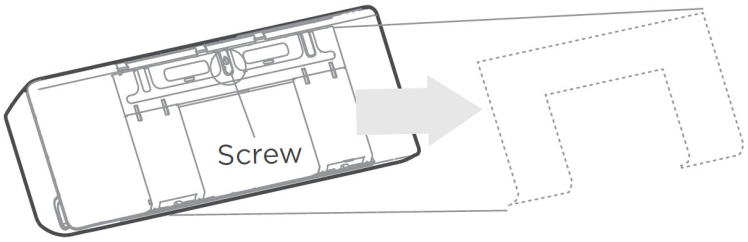

Step 2:
Secure the mounting plate to the wall with the screws provided. Ensure the mounting plate is flat against the wall.

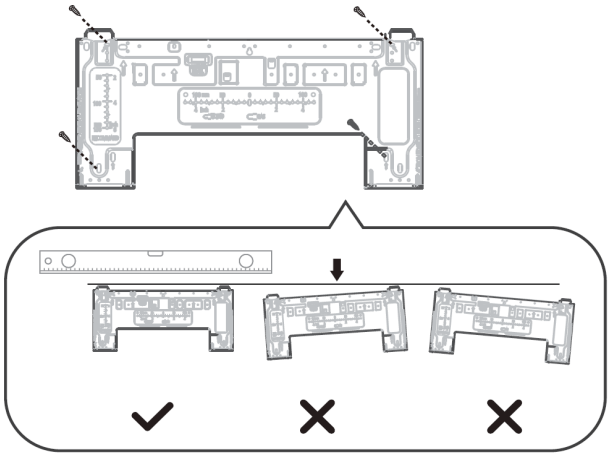

Correct orientation of Mounting Plate

Step 3:
Determine the location of the wall hole based on the position of the mounting plate. The dotted rectangular box on the right figure shows the size of your product.

9K & 12K Units

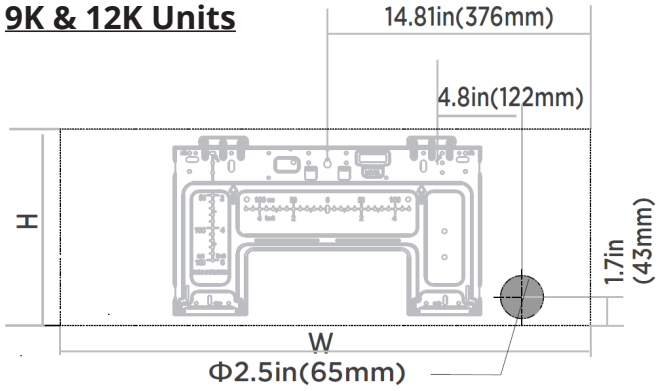

Indoor unit dimensions(WxH):
31.54in(802mm)x11.69in(297mm)

18K & 24K Units

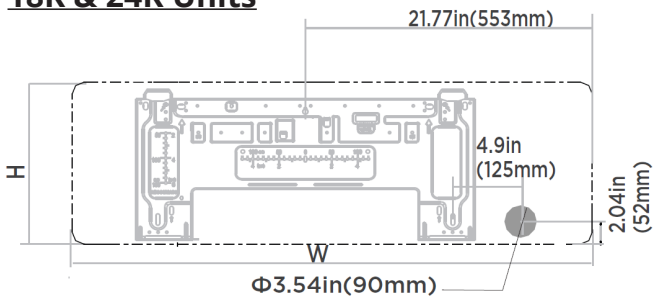

Indoor unit dimensions(WxH):
42.52in(1080mm)x13.19(335mm)

36K Unit

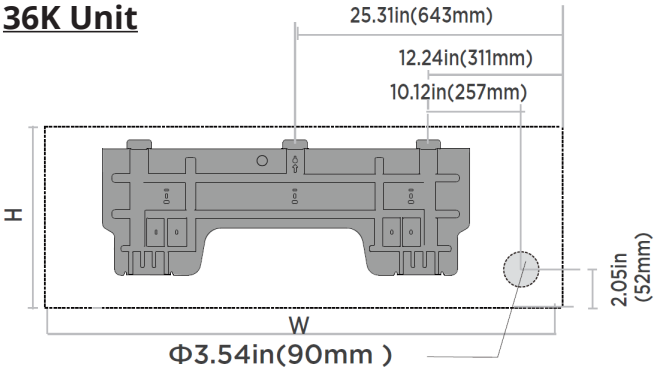

Indoor unit dimensions(WxH):
49.57in(1259mm)x14.25in(362mm)

NOTE: WALL HOLE SIZE

The size of the wall hole is determined by the connecting pipes. When the pipe size of the gas side is Φ5/8in (Φ16mm) or more, the wall hole should be Φ3.54in (Φ90mm). When the pipe size of the gas side is less than Φ5/8in (Φ16mm), the wall hole should be Φ2.5in (Φ65mm).

Drill Wall Hole

CAUTION

When drilling the wall hole, make sure to avoid wires, plumbing, and other sensitive components.

Step 1:
Using a 2.5in (65mm) or 3.54 (90mm) core drill, drill a hole in the wall. Make sure that the hole is drilled at a slight downward angle, so that the outdoor end of the hole is lower than the indoor end by about 0.2-0.275in (5-7mm). This will ensure proper water drainage.

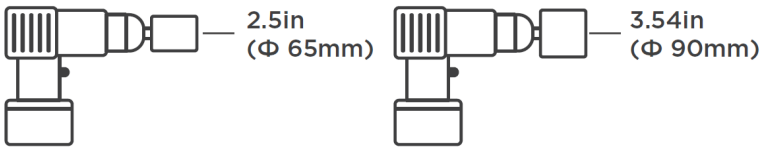

Using a 2.5in(65mm) or 3.54in(90mm)
core drill(according to the unit you purchased)

Note for Concrete or Brick Walls:
If the wall is made of brick, concrete, or similar material, drill 0.2in-diameter (5mm-diameter) holes in the wall and insert the sleeve anchors provided. Then, secure the mounting plate to the wall by tightening the screws directly into the clip anchors.

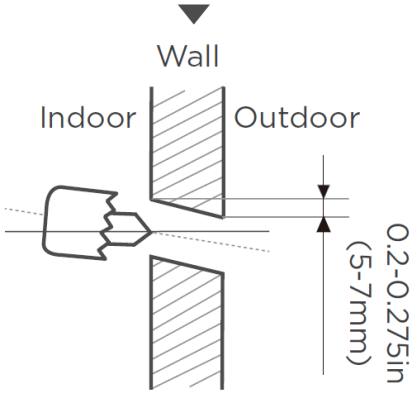

Drill the wall hole

Step 2:
Place the protective wall cuff in the hole. This protects the edges of the hole and will help seal it when you finish the installation process.

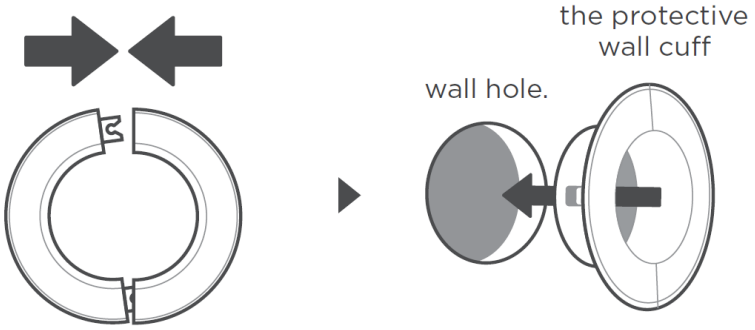

Place the protective wall cuff in the hole.

3.5 Refrigerant Pipe & Drain Hose Installation

NOTE

The refrigerant piping is inside an insulating sleeve attached to the back of the unit. You must prepare the piping before passing it through the hole in the wall.

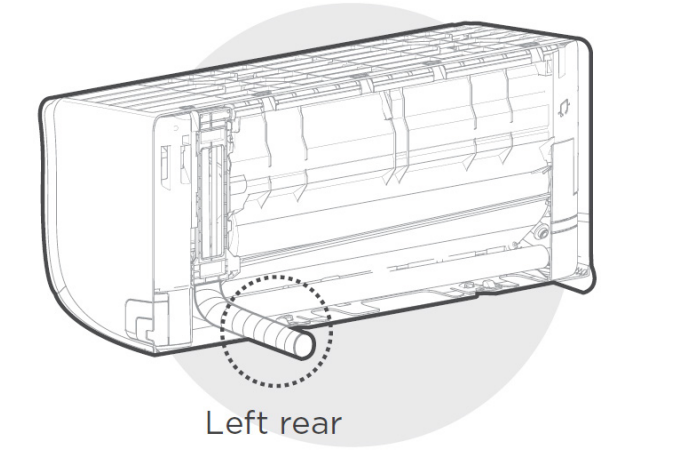

Refrigerant piping can only exit the indoor unit form left rear side

Tools Needed:
You will require the following tools to carry out this installation work correctly:

- 1 open-ended spanner, 19mm
- 1 open-ended spanner, 22mm/24mm
- 1 open-ended spanner, 24mm/27mm
- 1 Allen Key, 5mm
- 1 Philips Screwdriver
- 1 leak detection spray or water/soap mixture

Important Information:

- Follow the detailed instructions for connecting the refrigerant pipes to the indoor unit and outdoor unit. The warranty is only valid if the lines are installed correctly as described in the instructions.
- Do not remove the sealing caps and stoppers until immediately before you install the lines.
- To prevent leaks, ensure that the quick-release screw connections are absolutely free of dirt. Moisture or foreign bodies will adversely affect the function of the quick-release connectors, leading to a risk of refrigerant loss, which is not covered by the warranty.
- Only install refrigerant lines outdoors in dry weather.
- The refrigerant lines must not be installed then plastered over.
- Please make sure that refrigerant is never allowed to enter the environment. Improper handling of refrigerant may be harmful to health. Always wear work gloves and goggles when handling refrigerant.
- Do not smoke during the installation work. The equipment must never be operated without the refrigerant lines connected, otherwise the equipment will be damaged immediately.
- The screw connections may only be tightened using the appropriate open-ended spanner.

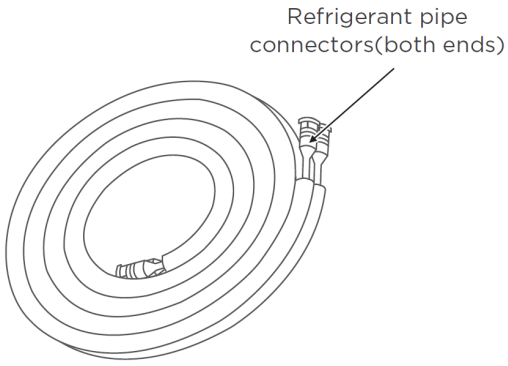

- Remember that if the refrigerant lines are tightened with too little torque, they will leak, but if they are tightened with too much torque, the screw connections could be damaged. If you are not confident about connecting the refrigerant line connectors yourself, it is imperative that you contact MRCOOL® customer service or a refrigeration contractor.

IMPORTANT: The EQ values are only designed for one-time installation. Their seal cannot be guaranteed if they are installed more than once. This will also void the warranty.

Connect the Refrigerant Pipes to Indoor Unit

Step 1:
Do not remove the plastic seals from the indoor equipment and the appropriate refrigerant pipe until immediately before you connect them.

Step 2:
Align the refrigerant pipe correctly, and make sure the dimensions of the connecting refrigerant pipe are the same. Place the screw connector on the refrigerant pipes onto the thread on the indoor equipment and tighten the first few threads by hand.



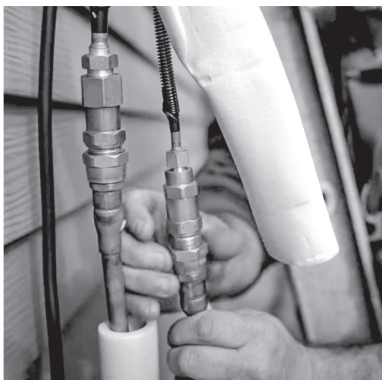

Step 3:
Using the image as a guide, and the steps outlined in this paragraph, you will now tighten the nuts of the screw connectors of the Quick Connect® line set to the indoor unit. Using two appropriate sized open-ended wrenches (depending on the dimensions of the connector) or adjustable crescent wrenches, place one of the wrenches on the nut marked "1", and the other wrench on the nut marked "2," as shown in the image below. Now, turn the wrench marked "2" in the direction of the rotational arrows, as shown, while holding the other wrench in place. Continue to tighten the connector until snug.
Work quickly while ensuring that the screw connectors do not skew as you tighten them.

IMPORTANT: Since the coupling works with tapping rings, it may leak if you disconnect and reconnect the pipes. This will also void the warranty.

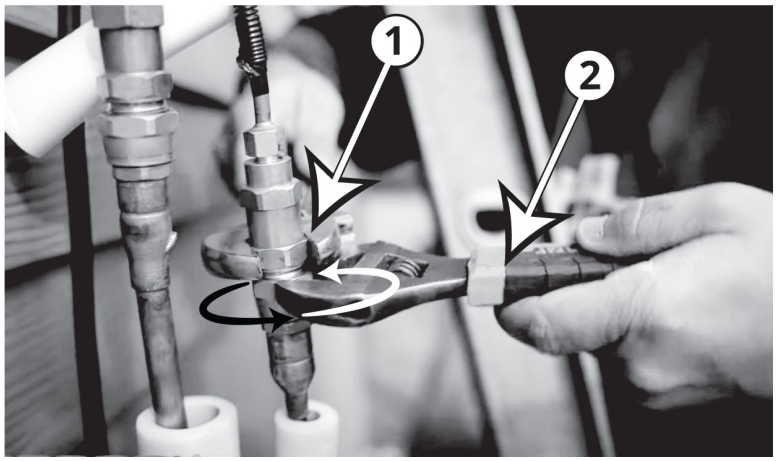

Step 4:
After finishing the connection, use the tape to wrap the refrigerant pipe and connecting cable together.

NOTE: In North America, the cable should be protected by an applicable conduit.

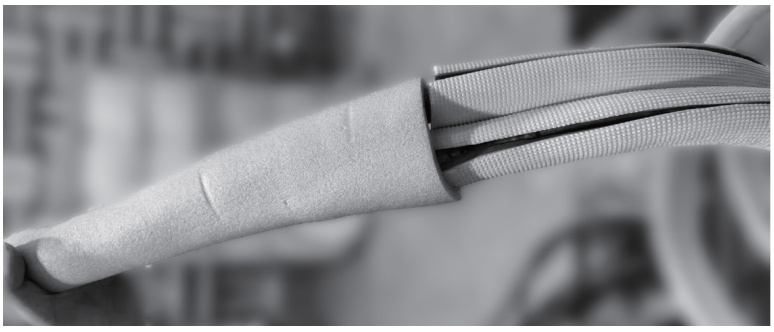

Step 5:
After connecting the quick connectors, pass the drain hose and refrigerant pipes through the wall hole.

NOTE: The quick connector parts must be located outside of the room. Use the wall hole sleeve, cap, and neoprene to seal the wall hole.



Step 6:
Use the sound-absorbent pads to prevent the quick-connector parts from being exposed to the air. Wrap the quick-connectors with the sound-absorbent pads tightly.





Step 7:
Wrap the connectors with the black insulation material. For the exposed portion on the top, use the supplied white insulation material to wrap it up completely.



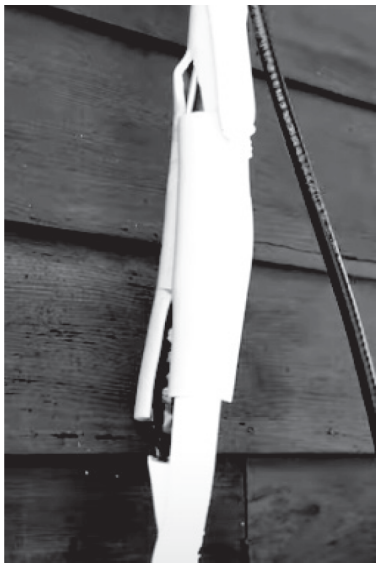

Step 8:
Finally, use the tape to wrap the refrigerant pipe and drain hose together. The cable should be protected by an applicable conduit.





Connect Drain Hose

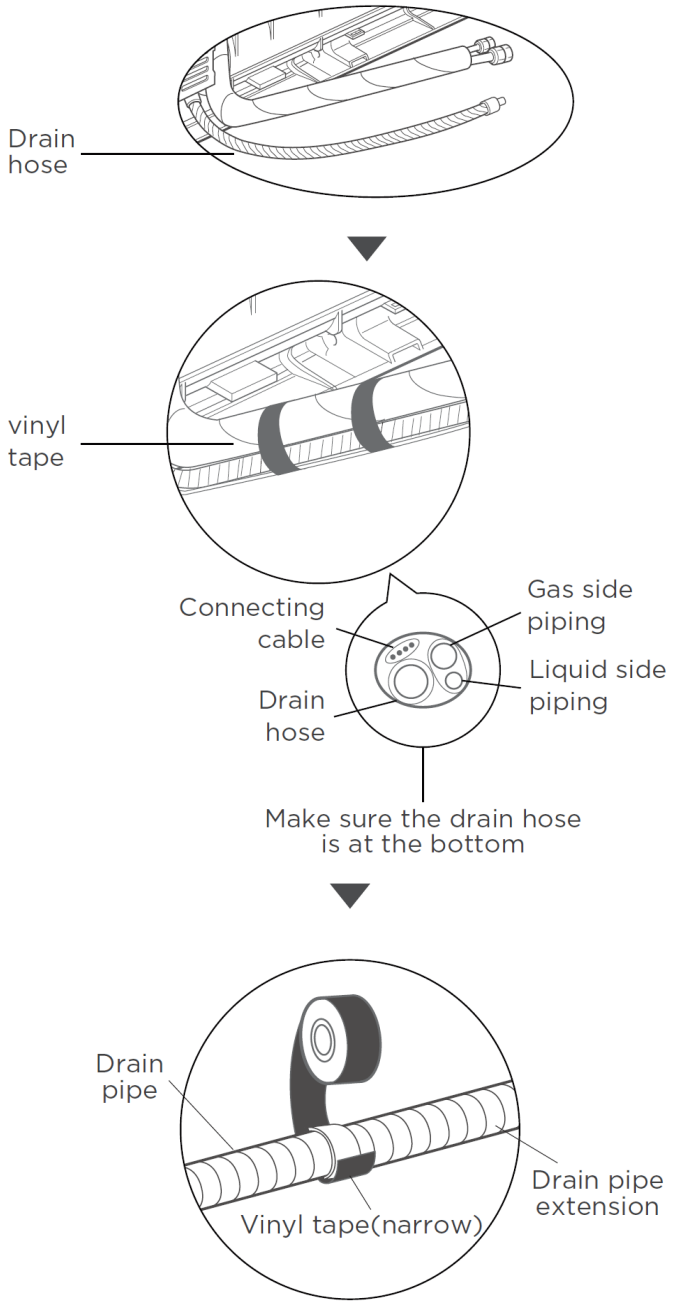

Step 1:
The drain hose can be attached to the left or right side. To ensure proper drainage, attach the drain hose on the same side that the refrigerant piping exits the unit. Attach a drain hose extension (purchased separately) to the end of the drain hose.

- Wrap the connection point firmly with Teflon tape to ensure a good seal to prevent leaks.
- For the portion of the drain hose that will remain indoors, wrap it with foam pipe insulation to prevent condensation.
- Remove the air filter and pour a small amount of water into the drain pan to ensure the water flows from the unit smoothly.

NOTE ON DRAIN HOSE PLACEMENT

Make sure to arrange the drain hose according to the following figures.

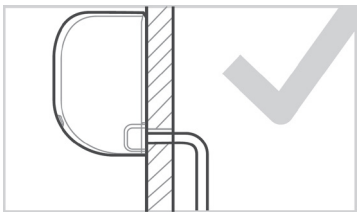

CORRECT
Make sure there are no kinks or dents in the drain hose to ensure proper drainage.

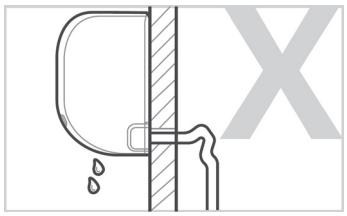

NOT CORRECT
Kinks in the drain hose will create water traps.

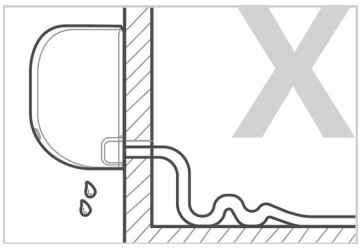

NOT CORRECT
Kinks in the drain hose will create water traps.

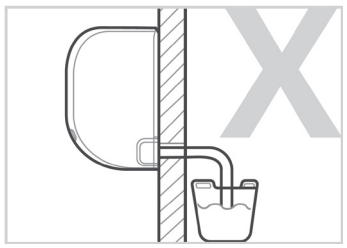

NOT CORRECT
Do not place the end of the drain hose in water or in containers that collect water. This will prevent proper drainage.

PLUG THE UNUSED DRAIN HOLE
To prevent unwanted leaks you must plug the unused drain hole with the rubber plug provided.

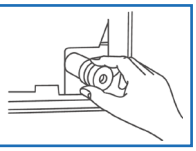

3.6 Electrical Wiring

WARNING

- Before performing any electrical work, read the following regulations.
- Before performing any electrical work, disconnect the main power to the system.

1. All wiring must comply with local and national electrical codes, regulations, and must be installed by a licensed electrician.
2. All electrical connections must be made according to the Electrical Connection Diagram located on the panels of the indoor and outdoor units.
3. If there is a serious safety issue with the power supply, stop work immediately. Explain your reasoning to the client, and refuse to install the unit until the safety issue is properly resolved.
4. If connecting power to fixed wiring, a surge protector and main power switch should be installed.
5. Only connect the unit to an individual branch circuit outlet. Do not connect another appliance to that outlet.
6. Make sure to properly ground the unit.
7. Every wire must be firmly connected. Loose wiring can cause the terminal to overheat, resulting in product malfunction and possible fire.
8. Do not let wires touch or rest against refrigerant tubing, the compressor, or any moving parts within the unit.
9. To avoid getting an electric shock, never touch the electrical components soon after the power supply has been turned off. After turning off the power, always wait 10 minutes or more before you touch the electrical components.

WARNING

All wiring must be performed strictly in accordance with the wiring diagram located on the back of the indoor unit's front panel.

Connect Signal & Power Cables

The signal cable enables communication between the indoor and outdoor units. You must first choose the right cable size before preparing it for connection. NOTE: Choose the cable type according to local electrical codes and regulations. Please choose the right cable size according to the Minimum Circuit Ampacity located on the nameplate of the unit.

DO NOT MIX LIVE AND NULL WIRES.
This is dangerous, and can cause the unit to malfunction.

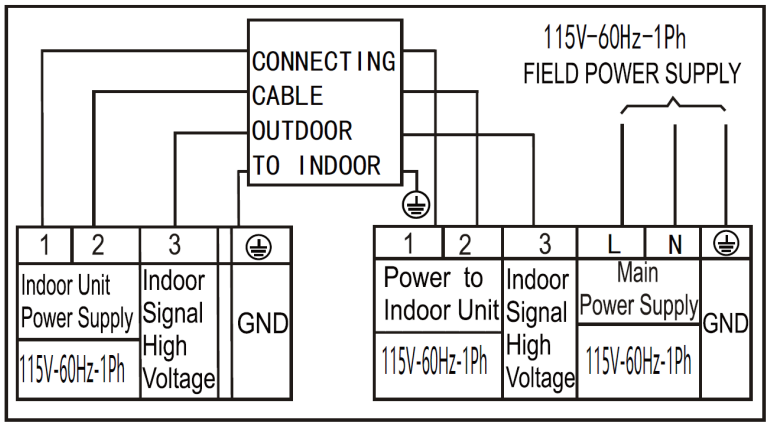

Connection Diagram (115V)

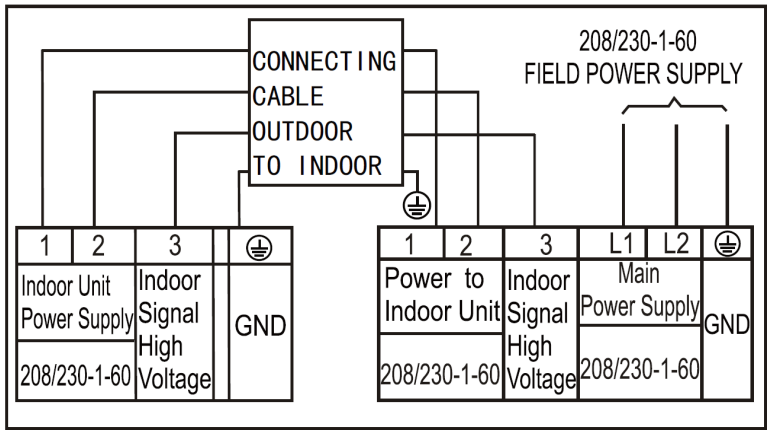

Connection Diagram (208/230V)

1. Open the front panel of the indoor unit.
2. Using a screwdriver, open the wire box cover on the right side of the unit. This will reveal the terminal block.
3. Facing the back of the unit, remove the large plastic knock-out panel to create a slot through which the conduit tube can be installed.

NOTE: For units with five-core cable, remove the small, middle plastic knock-out panel to create a slot through which the cable can exit. Use needle-nose pliers if the plastic panel is too difficult to remove by hand.

4. As shown in the illustration, insert the wires including the ground wire into the conduit and secure them with a lock nut onto the conduit mounting plate.

5. Match wire colors with terminal numbers on the indoor and outdoor unit's terminal blocks and firmly screw the wires to the corresponding terminals.
6. Connect the ground wires to the corresponding terminals.
7. Pull the wires and check that the wires are securely fixed to the terminal block.

DO NOT MIX LIVE AND NULL WIRES.
This is dangerous, and can cause the unit to malfunction.

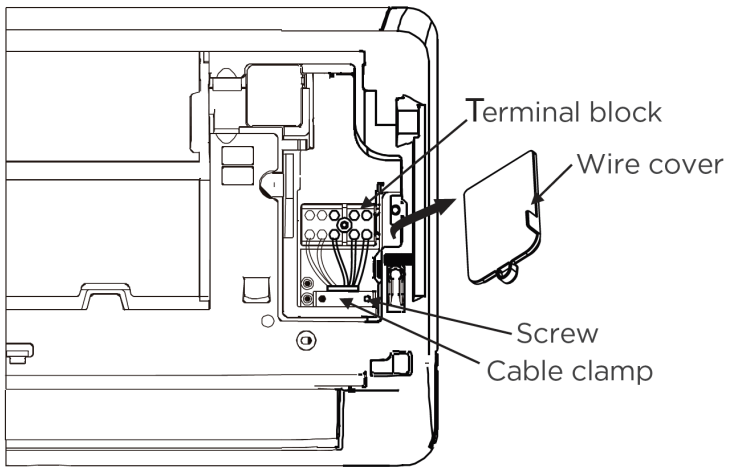

Back view

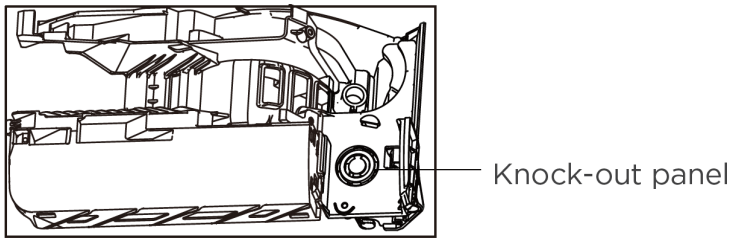

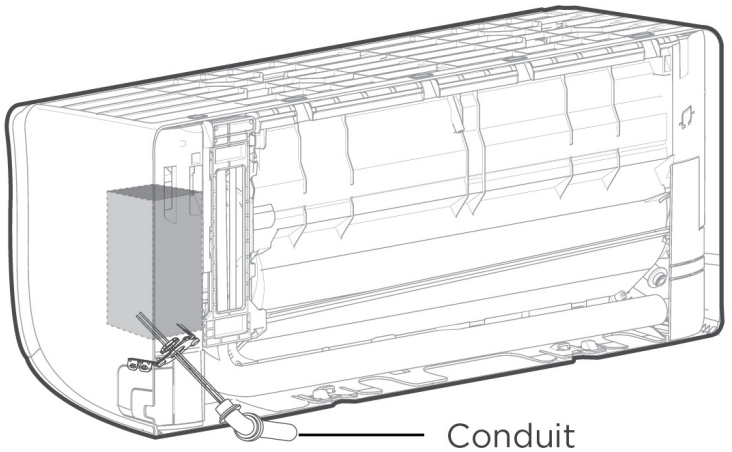

3.7 Wrap Piping & Cables

NOTE

Before passing the piping and drain hose through the wall hole, you must bundle them together to save space, protect them, and insulate them.

Step 1:
Bundle the drain hose and refrigerant pipes as shown below.

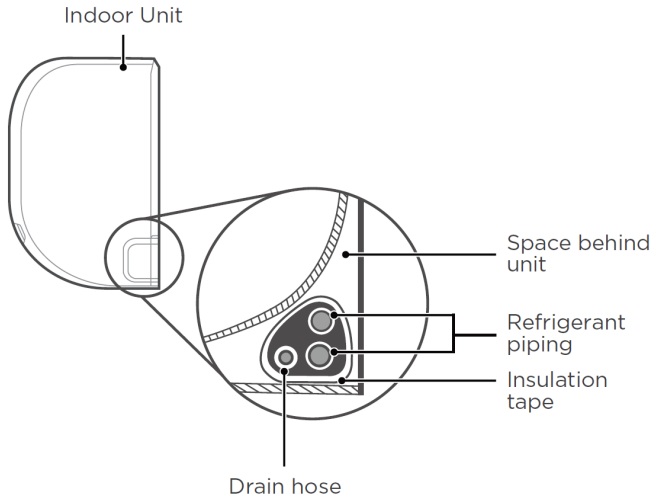

Step 2:
Using adhesive vinyl tape, attach the drain hose to the underside of the refrigerant pipes.

Step 3:
Using insulation tape, wrap the refrigerant pipes and drain hose tightly together. Double-check that all items are bundled.

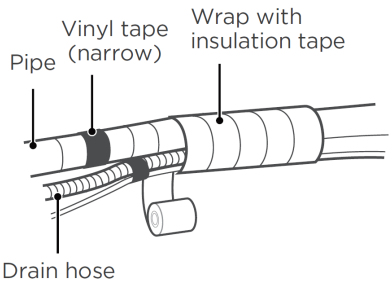

DRAIN HOSE MUST BE ON BOTTOM
Make sure the drain hose is at the bottom of the bundle. Putting the drain hose at the top of the bundle can cause the drain pan to overflow, which can lead to fire or water damage.

DO NOT WRAP ENDS OF PIPING
When wrapping the bundle, keep the ends of the piping unwrapped. You need to access them to test for leaks at the end of the installation process.

3.8 Mount Indoor Unit

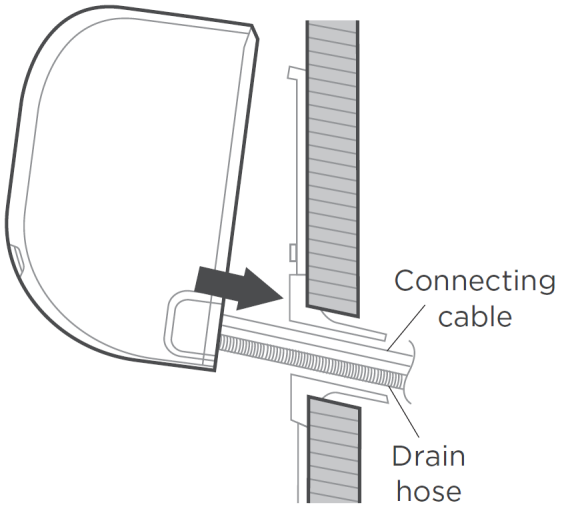

Put pipes in wall hole.

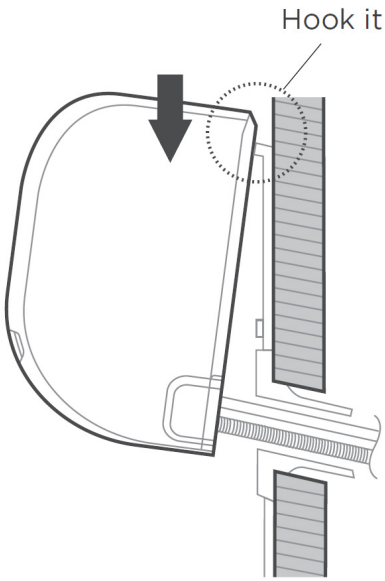

Hook it and press down lightly to secure.

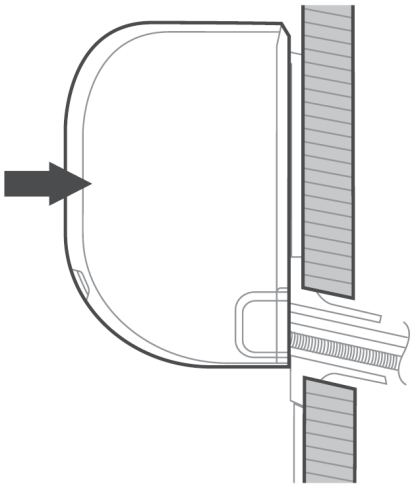

Check that the unit is mounted firmly.

If you installed new connective piping to the outdoor unit, do the following:

- If you have already passed the refrigerant piping through the hole in the wall, proceed to Step 3.

1. Double-check that the ends of the refrigerant pipes are sealed to prevent dirt or foreign materials from entering the pipes.
2. Slowly pass the wrapped bundle of refrigerant pipes, drain hose, and signal wire through the hole in the wall.
3. Hook the top of the indoor unit on the upper hook of the mounting plate.
4. Check that the unit is hooked firmly on the mounting plate by applying slight pressure to the left and right-hand sides of the unit. The unit should not jiggle or shift.
5. Using even pressure, push down on the on the bottom half of the unit. Keep pushing down until the unit snaps onto the hooks along the bottom of the mounting plate.
6. Again, check that the unit is firmly mounted by applying slight pressure to the left and the right-hand sides of the unit.

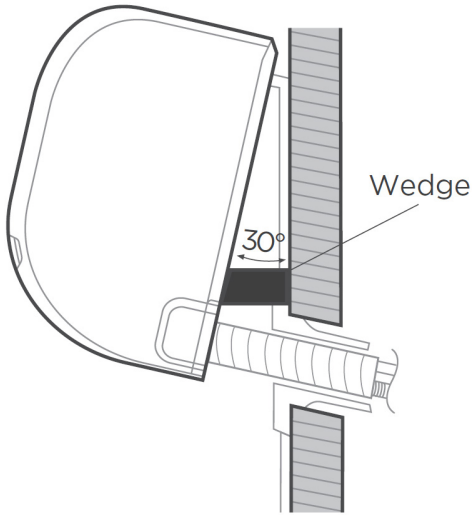

If the refrigerant piping is already embedded in the wall, do the following:

1. Hook the top of the indoor unit on the upper hook of the mounting plate.
2. Use a bracket or wedge to prop up the unit, giving you enough room to connect the refrigerant piping, signal cable, and drain hose.
3. Connect drain hose and refrigerant piping. (Refer to the refrigerant piping connection section of this manual for instructions.)
4. Keep pipe connection point exposed to perform the leak test. (Refer to the Electrical Checks and Leak Checks sections of this manual.)
5. After the leak test, wrap the connection point with insulation tape.
6. Remove the bracket or wedge that is propping up the unit.
7. Using even pressure, push down on the bottom half of the unit. Keep pushing down until the unit snaps onto the hooks along the bottom of the mounting plate.

NOTE: UNIT IS ADJUSTABLE

Keep in mind that the hooks on the mounting plate are smaller than the holes on the back of the unit. If you find that you don't have ample room to connect embedded pipes to the indoor unit, the unit can be adjusted left or right by approximately 1.18-1.96in (30-50mm), depending on the model.

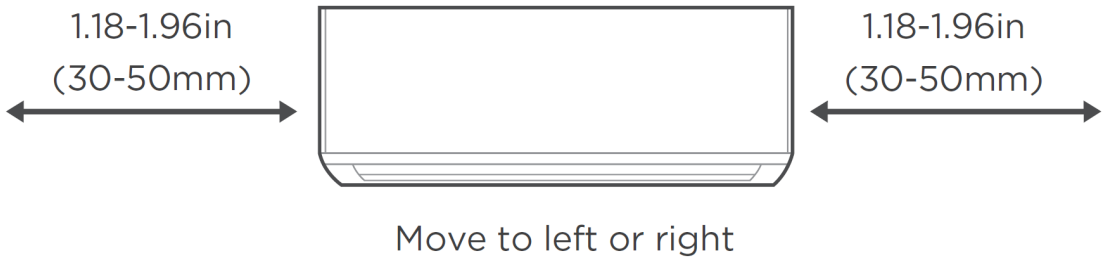

! CAUTION

For the units that adopt the following pipe connectors, strictly perform the piping work in accordance with the following instructions.

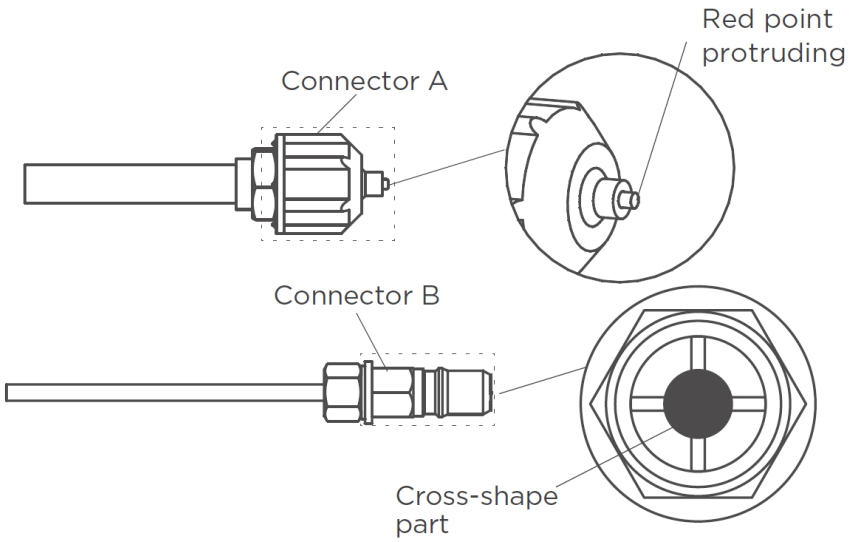

1. Before performing the refrigerant piping connection, always wear work gloves and goggles, and remember that the connectors A and B are not allowed to face people directly.
2. Keep pressing the cross-shape part of connector B with a tool for approximately 5-10 seconds until the red protruding point of Connector A retracts completely.
3. Remove connectors A and B, then perform the refrigerant piping connection between the indoor unit and the outdoor unit.

4 OUTDOOR UNIT INSTALLATION

4.1 Location Selection

NOTE: PRIOR TO INSTALLATION

Before installing the outdoor unit, you must choose an appropriate location. The following are standards that will help you choose an appropriate location for the unit.

Proper Installation Locations Meet the Following Standards:

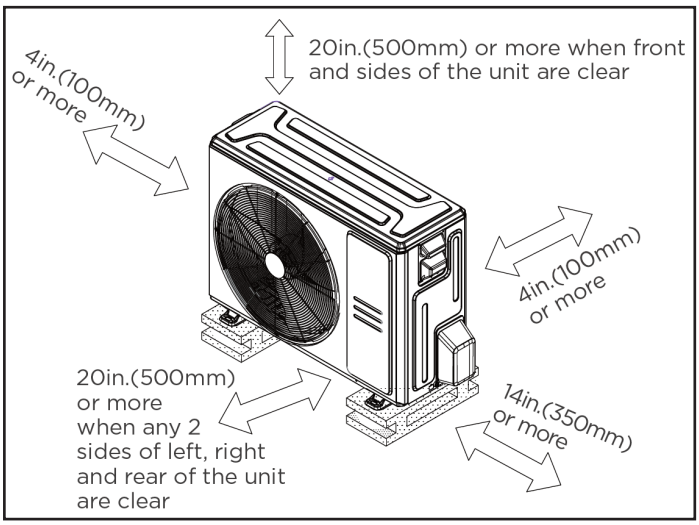

☑ *Meets all spatial requirements shown in Installation requirements above,.*



☑ *Good air circulation & ventilation.*



☑ *Firm & solid-the location can support the unit & will not vibrate.*



☑ *Noise from the unit will not disturb other people.*

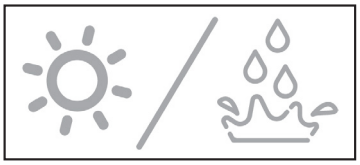

☑ *Protected from prolonged periods of direct sunlight or rain.*

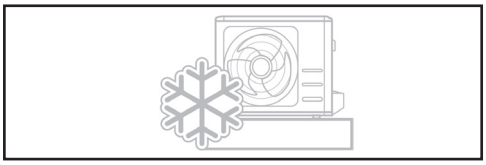

☑ *Where snowfall is anticipated, take appropriate measures to prevent ice buildup & coil damage.*

NOTE: Install the unit by following local codes and regulations. These may differ slightly between different regions.

! CAUTION: SPECIAL CONSIDERATIONS FOR EXTREME WEATHER

If the unit is exposed to heavy wind:
Install the unit so that the air outlet fan is at a 90° angle to the direction of the wind. If needed, build a barrier in front of the unit to protect it from extremely heavy winds.
If the unit is frequently exposed to heavy rain or snow:
Build a shelter above the unit to protect it from the rain or snow. Be careful not to obstruct air flow around the unit.
If the unit is frequently exposed to salty air (seaside):
Use outdoor unit that is specially designed to resist corrosion.

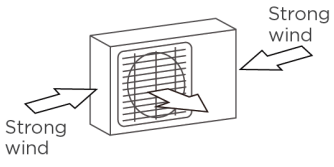

90° angle to the direction of the wind

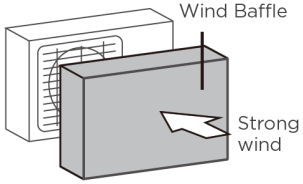

Build a wind Baffle to protect the unit

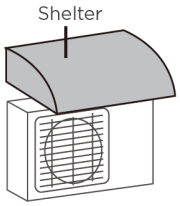

Build a shelter to protect the unit

DO NOT install the unit in the following locations:

- ⊘ *Near an obstacle that will block air inlets & outlets.*
- ⊘ *Near a public street, crowded areas, or where noise from the unit will disturb others.*
- ⊘ *In a location exposed to excessive amounts of salty air.*
- ⊘ *Near animals or plants that will be harmed by hot air discharge.*
- ⊘ *Near any source of combustible gas.*
- ⊘ *In a location exposed to large amounts of dust.*

4.2 Drain Joint Installation

NOTE: PRIOR TO INSTALLATION

Before bolting the outdoor unit in place, you must install the drain joint at the bottom of the unit. For the units with base pan built-in with multiple holes for proper draining during defrost, the drain joint does not need to be installed.

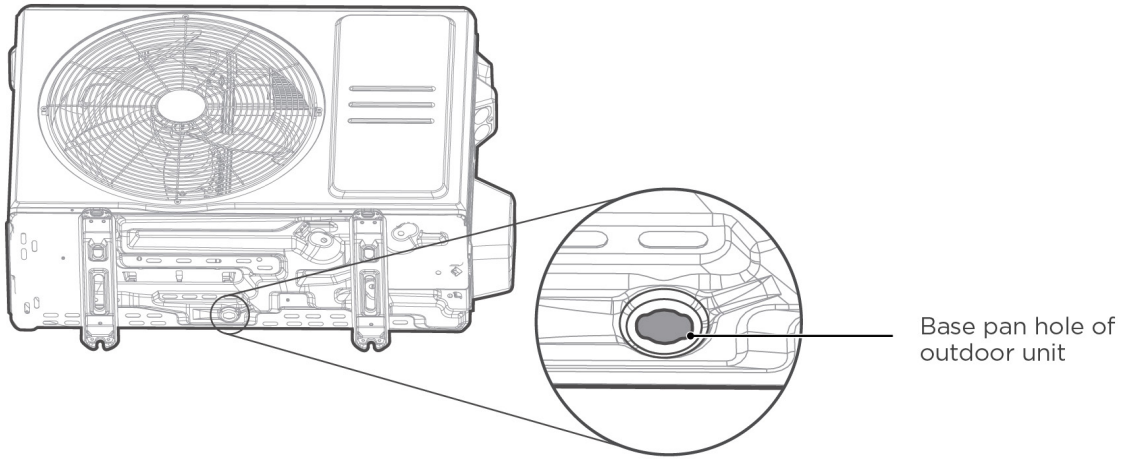

Step 1:
Find the base pan hole on the outdoor unit.

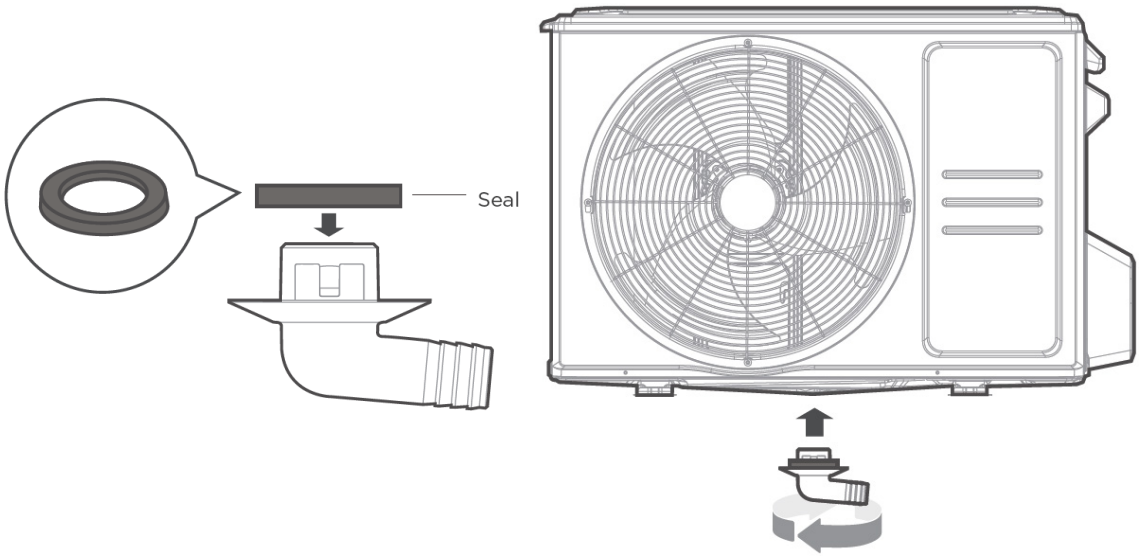

Step 2:

- Fit the rubber seal on the end of the drain joint that will connect to the outdoor unit.
- Insert the drain joint into the hole in the base pan of the unit.
- Connect a drain hose extension (not included) to the drain joint to redirect water from the unit during heating mode.

NOTE: In cold climates, ensure that the drain hose is as vertical as possible to ensure swift water drainage. If water drains too slowly, it can freeze in the hose and flood the unit.

4.3 Anchor Outdoor Unit

⚠ WARNING

When drilling into concrete, eye protection is recommended at all times.

- The outdoor unit can be anchored to the ground or to a wall-mounted bracket with bolts (M10). Prepare the installation base on the unit according to the dimensions below.
- The following is a list of different outdoor unit sizes and the distance between their mounting feet. Prepare the installation base of the unit according to the dimensions below.

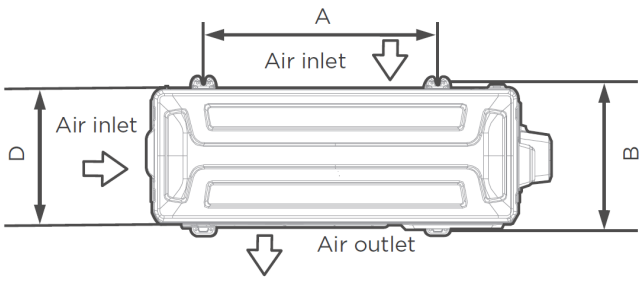

Top View

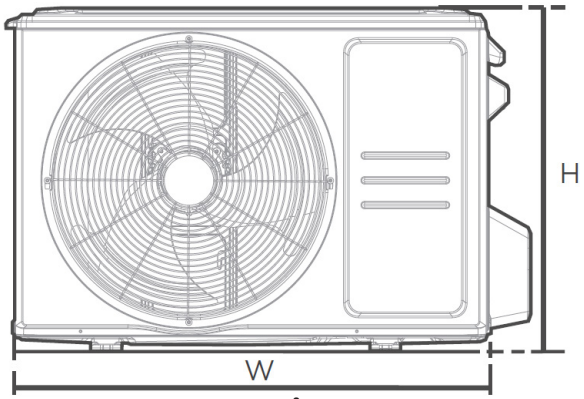

Front View

Outdoor Unit Model	Outdoor Unit Dimensions W x H x D	Mounting Dimensions	
		Distance A	Distance B
DIY-09-HP-C-115D25-O	30.1in x 21.8in x 11.9in (765mm x 555mm x 303mm)	17.8in (452mm)	11.3in (286mm)
DIY-12-HP-C-115D25-O			
DIY-18-HP-C-230D25-O	35.0in x 26.5in x 13.5in (890mm x 673mm x 342mm)	26.1in (663mm)	13.9in (354mm)
DIY-24-HP-C-230D25-O	37.2in x 31.9in x 16.1in (946mm x 810mm x 410mm)	26.5in (673mm)	15.9in (403mm)
DIY-36-HP-C-230D25-O			

If you will install the unit on the ground or on a concrete platform, do the following:

1. Mark the positions for four expansion bolts based on the dimensions chart.
2. Pre-drill holes for expansion bolts.
3. Place a nut on the end of each expansion bolt.
4. Hammer expansion bolts into the pre-drilled holes.
5. Remove the nuts from the expansion bolts, and place the outdoor unit on the bolts.
6. Put a washer on each expansion bolt, then replace the nuts.
7. Using a wrench, tighten each nut until snug.

If you will install the unit on a wall-mounted bracket, do the following:

1. Mark the position of the bracket holes based on the dimensions chart.
2. Pre-drill the holes for the expansion bolts.
3. Place a washer and nut on the end of each expansion bolt.
4. Thread expansion bolts through holes in the mounting brackets, put the mounting brackets in position, and hammer expansion bolts into the wall.
5. Check that the mounting brackets are level.
6. Carefully lift unit and place its mounting feet on the brackets.
7. If allowed, install the unit with rubber gaskets to reduce vibrations and noise.

! CAUTION: SPECIAL CONSIDERATIONS FOR EXTREME WEATHER

Make sure that the wall is made of solid brick, concrete, or of similarly strong material. The wall must be able to support at least four times the unit's weight.

4.4 Signal & Power Cable Connection

⚠ WARNING

Before operation of the unit:

- All wiring work must be performed strictly in accordance with the wiring diagram located inside the wire cover of the outdoor unit.
- Before performing any electrical or wiring work, turn off the main power to the system.

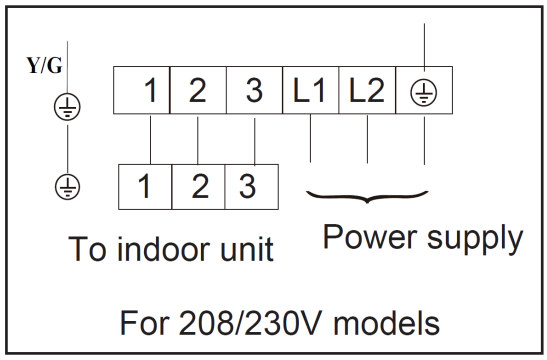

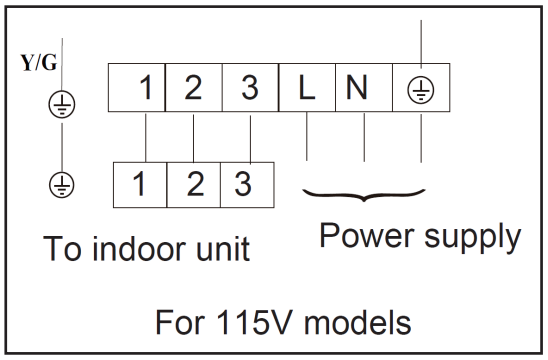

The outside unit's terminal block is protected by an electrical wiring cover on the side of the unit. A comprehensive wiring diagram is printed on the inside of the wiring cover.

1. Remove the wire cover from the unit by loosening the 3 screws.
2. Connect the sheathed wire by first turning the ring counterclockwise to remove.
3. Pass through the hole in the metal panel.
4. Reinstall the ring and tighten it by turning clockwise.
5. Replace the wire cover on the side of the unit, and screw it in place.





2

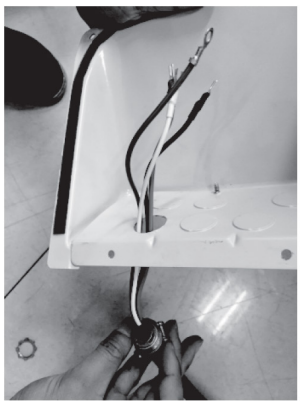



3

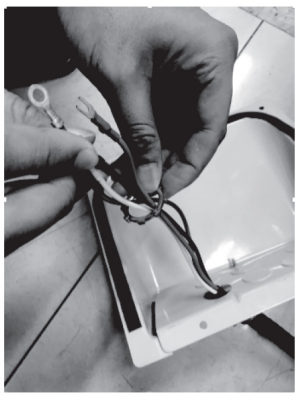



4



5

4.5 Refrigerant Piping Connection

⚠ WARNING

For your safety, always wear goggles and work gloves when connecting the pipes.

NOTE: All pictures are included for explanatory purposes only. The actual shape of the outdoor unit that you purchased may be slightly different.



Step 1:
First, remove the water tray on the outdoor unit.
NOTE: Before connecting the Quick Connect® line set, use a wrench to confirm the fast joint and the shut-off valve are securely fastened in the direction indicated in the photo. If there is any looseness, it needs to be tightened to prevent leakage. During the assembly process, if there is a reverse disassembly operation, the above operation needs to be performed to tighten it.

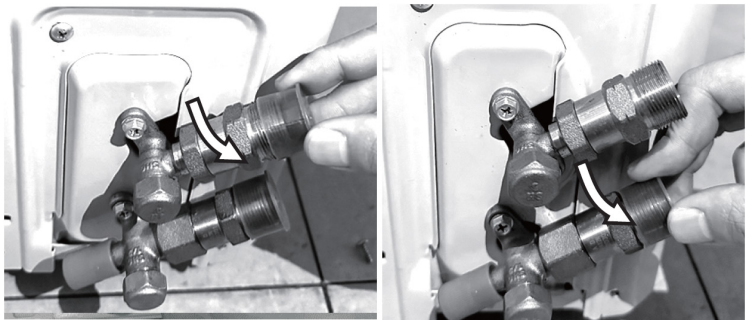

Step 2:
Do not remove the plastic seals from the outdoor unit and the appropriate refrigerant pipes until immediately before you connect them.



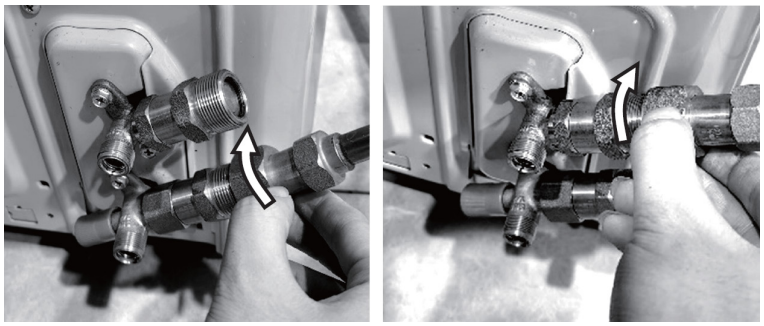

Step 3:
Align the refrigerant pipes correctly so that they line up with the valves and are not stressed. Place the screw connector on the refrigerant line just onto the thread on the outdoor unit and tighten the first few threads by hand. **NOTE:** The refrigerant pipes must be connected to the valves on the outdoor unit with as little stress as possible.

⚠ WARNING

Before connecting the pipes, ensure that the quick connectors are tightened.
Before you continue, it is essential that you read the following instructions carefully.

Coupling Size	Pound-Force Foot (lbf-ft)	Newton Meter (N-m)	Kilogram-Force Meter (kgf-m)	Recommended Min. Tightening Torque
-06 (6.35mm dash size)	18-20	24.4-27.1	2.4-2.7	10
-09 (9.62mm dash size)	30-35	40.6-47.4	4.1-4.8	15
-12 (12.7mm dash size)	45-50	61.0-67.7	6.2-6.9	25
-16 (15.88mm dash size)	60-65	81.3-88.1	8.2-8.9	32
-19 (19.05mm dash size)	/	/	/	45

Step 4:
Using the first image below as a guide, starting with the bottom screw connector, you will now tighten the line set to the outdoor unit. Using two appropriate sized open-ended wrenches (depending on the dimensions of the connector), or adjustable crescent wrenches, place one of the wrenches on the nut marked "1", and the other wrench on the nut marked "2," Now, turn the wrench on nut "2" in the direction of the rotational arrow, while holding the other wrench in place, as seen in the first image below. Continue to tighten the connector until snug.

NOTE: Work quickly and make sure the screw connectors do not become crooked as you tighten them. Repeat the same process for the top screw connector, using the second image below as a guide.

IMPORTANT: Since the coupling works with tapping rings, it may leak if you undo and reconnect the pipes. This will also void the warranty.

NOTE: After completing steps 1-4, check that all the connections are sealed correctly using leak detection spray or soap suds. If any bubbles form, the system has a leak and the screw connectors must be re-tightened using an open-ended spanner.

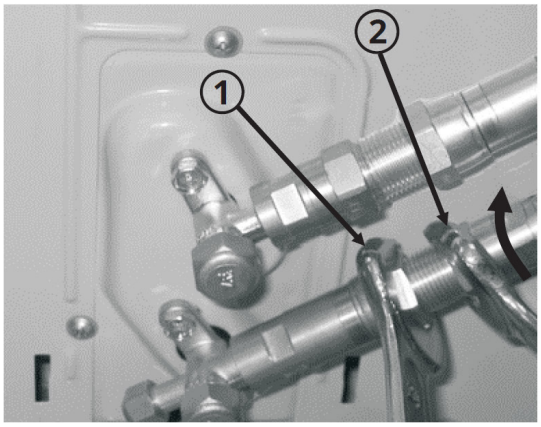

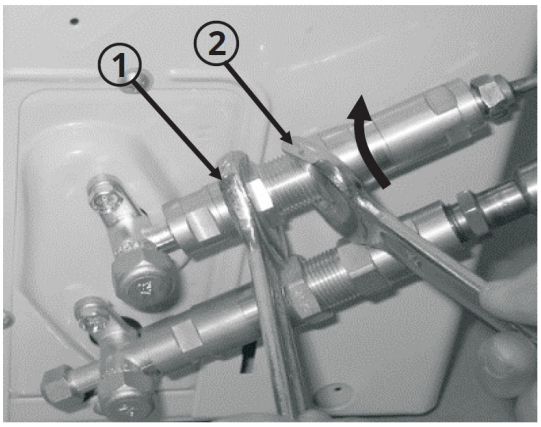

Step 5:
Using the images below as a guide, remove the cover on the top valve, using a 19 mm open-ended wrench or a crescent (adjustable-type) wrench. Then, insert a 5 mm Allen key and open the valve by turning it counter-clockwise as far as it will go. **DO NOT force it.** The valve is now open. Screw the cover back onto the top valve and tighten it well to ensure that it is properly sealed.

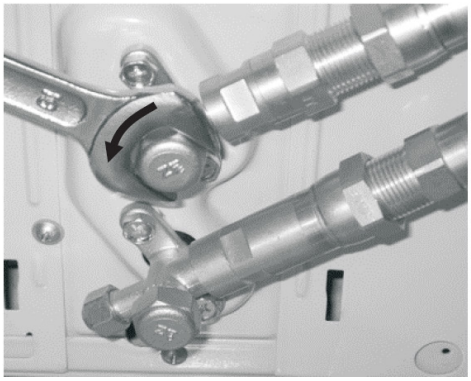

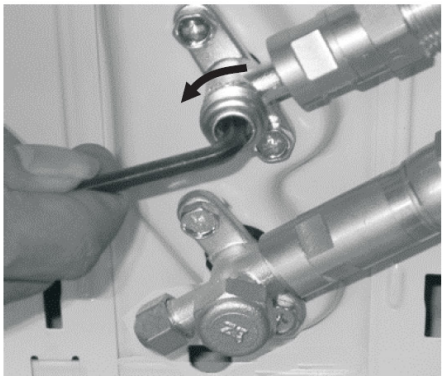

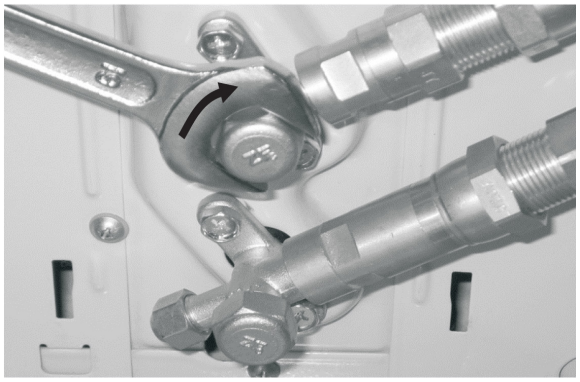

Step 6:
Using the images below as a guide, repeat the same process for the bottom valve. Remove the cover on the bottom valve, using a 19 mm open-ended wrench or a crescent (adjustable-type) wrench. Then, insert a 5 mm Allen key and open the valve by turning it counter-clockwise as far as it will go. DO NOT force it. Screw the cover back onto the bottom valve and tighten it well to ensure that it is properly sealed.

IMPORTANT: The conical ring on the valve has an important sealing function together with the sealing sat in the caps. Ensure that you do not damage the cone and that you keep the cap free of dirt and dust.

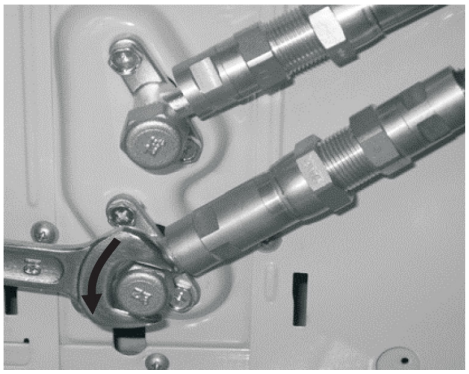

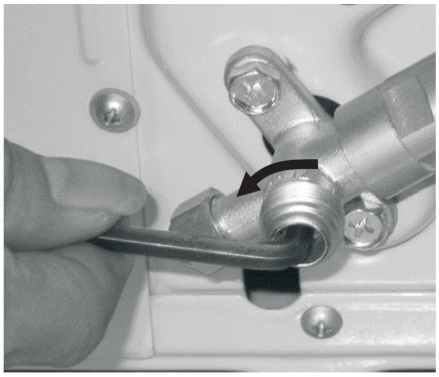

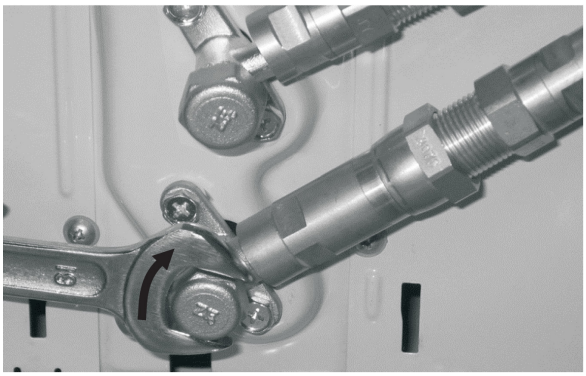

Step 7:
After completing steps 1-6, check that all the connections are sealed correctly using leak detection spray or soap suds. If any bubbles form, the system has a leak and the screw connectors must be re-tightened.

Step 8:
Start the equipment so that the operating pressures build up inside it. Check all the connectors again for signs of leaks during both cooling mode and heating mode. If any bubbles form, the system has a leak and the screw connectors must be re-tightened.

5.1 Electrical & Gas Leak Checks

⚠ WARNING-RISK OF ELECTRIC SHOCK

All wiring must comply with local and national electrical codes and must be installed by a licensed electrician.

Electrical Safety Checks

After installation, confirm that all electrical wiring is installed in accordance with local and national regulations, and according to the installation manual.

Gas Leak Checks

There are two different methods to check for gas leaks.

***Soap & Water Method*:**
Using a soft brush, apply soapy water or liquid detergent to all pipe connection points on the indoor unit and outdoor unit. The presence of bubbles indicates a leak.

***Leak Detector Method*:**
If using a leak detector, refer to the device's operation manual for proper usage instructions.

AFTER PERFORMING GAS LEAK CHECKS:
After confirming that all of the pipe connection points do not leak, replace the valve cover on the outside unit.

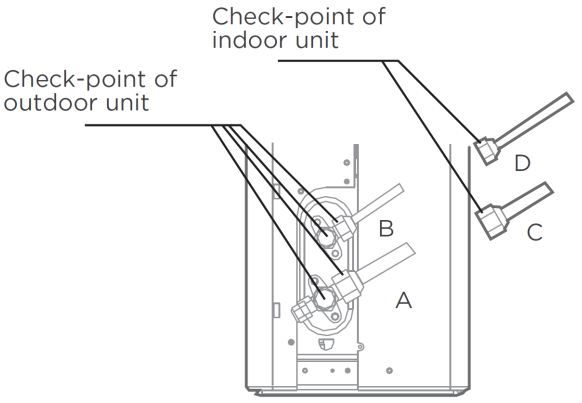

A: Low Pressure Stop Valve
B: High Pressure Stop Valve
C & D: Indoor Unit Flare Nuts

5.2 Test Run

BEFORE TEST RUN

Only perform the test run after you have completed the following steps:

- Electrical Safety Checks - Confirm that the unit's electrical system is safe and operating properly.
- Gas Leak Checks - Check all flare nut connections and confirm that the system is not leaking.
- Confirm that gas and liquid (high and low pressure) valves are fully open.

You should perform the test run for at least 30 minutes.

- Connect power to the unit.
- Press the ON/OFF button on the remote control to turn it on.
- Press the MODE button to scroll through the following functions, one at a time:
  -Cool: Select lowest possible temperature
  -Heat: Select highest possible temperature
- Let each function run for 5 minutes, and perform the following checks:

Checks to Perform	Pass/Fail	
No electrical leakage		
Unit is properly grounded		
All electrical terminals are properly covered		
Indoor & outdoor units are solidly installed		
All pipe connection points do not leak	Indoor (2):	Outdoor (2):
Water drains properly from drain hose		
All piping is properly insulated		
Unit performs cool function properly		
Unit performs heat function properly		
Indoor unit louvers rotate properly		
Indoor unit responds to remote control		

DOUBLE-CHECK PIPE CONNECTIONS

During operation, the pressure of the refrigerant circuit will increase. This may reveal leaks that were not present during your initial leak check. Take time during the Test Run to double-check that all refrigerant pipe connection points do not have leaks. Refer to the Gas Leak Checks section for instructions.

After the test run is successfully completed, and you confirm that all check points in the list have passed, do the following:

- Using the remote control, return unit to normal operating temperature.
- Using insulation tape, wrap the indoor refrigerant pipe connections that you left uncovered during the indoor unit installation process.

If Ambient Temperature is Below 60°F (16°C):

You can't use the remote control to turn on the cool function when the ambient temperature is below 60°F (16°C). In this instance, you can use the **MANUAL CONTROL** button to test the cool function.

- Lift the front panel of the indoor unit, and raise it until it clicks in place.
- The **MANUAL CONTROL** button is located on the right-hand side of the unit. Press it 2 times to select the **COOL** function.
- Perform the test run as normal.

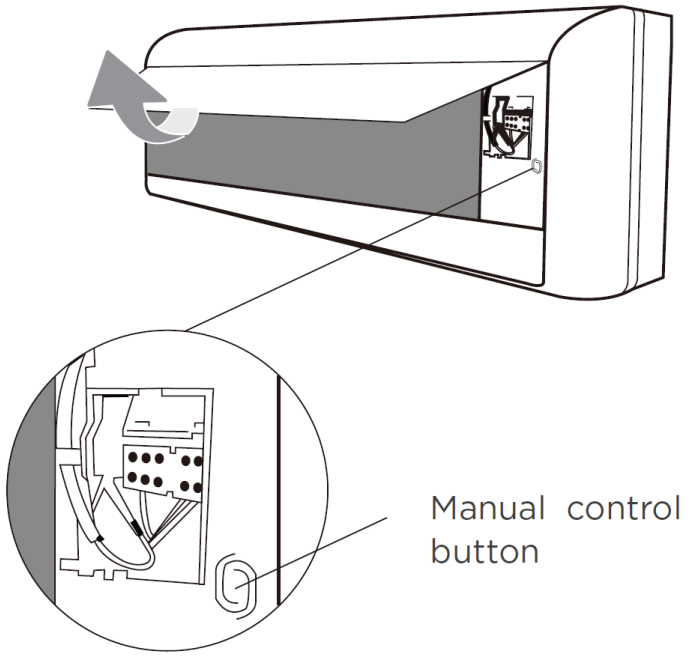

5.3 Care & Maintenance

! CAUTION

- Clean the filter on your unit every two weeks. Failing to do so can lead to reduced cooling efficiency or damage to your health.
- Always turn off the system and disconnect its power supply before cleaning or maintenance.
- Do not touch the filter within 10 minutes after turning off the unit.
- Only use a soft, dry cloth to wipe the unit clean. You can use a cloth soaked in warm water to wipe it clean if the unit is especially dirty.
- Do not use chemicals or chemically treated cloths to clean the unit.
- Do not use benzene, paint thinner, polishing powder, or other solvents to clean the unit. They can cause the plastic surface to crack or deform.
- Do not use water hotter than 104°F (40°C) to clean the front panel. This can cause the panel to deform or become discolored.

Cleaning the Air Filter

Step 1:
Lift the front panel of the indoor unit. For the unit with a supporting rod, use it to prop up the front panel.

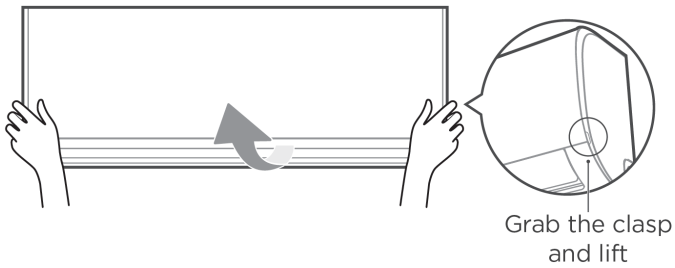

Step 2:
Grip the tab on the end of the filter, lift it up, then pull it towards you and pull the filter out.

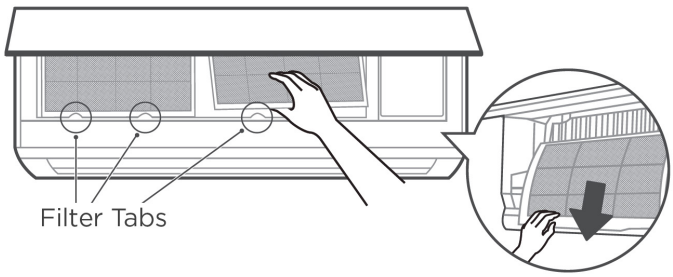

Step 3:
If your filter has a small air freshening filter, unclip it from the larger filter. Clean this air freshening filter with a hand-held vacuum.

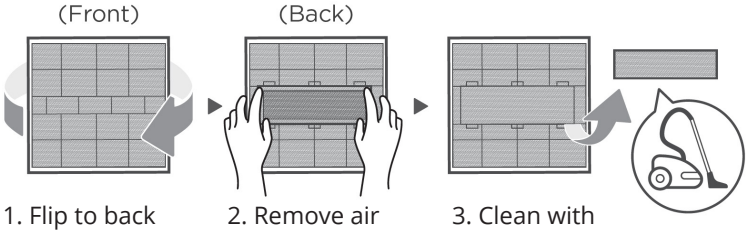

Step 4:
Clean the large air filter with warm, soapy water. Be sure to use a mild detergent. Rinse the filter with fresh water, then shake off excess water. Dry it in a cool, dry place, and refrain from exposing it to direct sunlight.

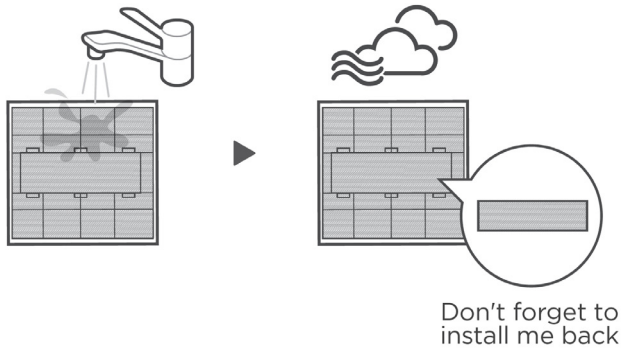

Step 5:
When dry, re-clip the air freshening filter to the larger filter, then slide it back into the indoor unit. Finally, close the front panel of the indoor unit.

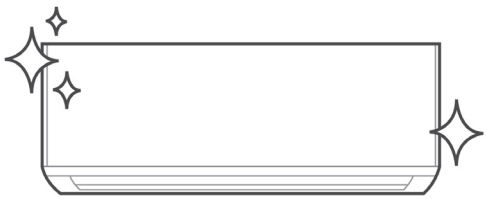

! CAUTION

- Before changing the filter or cleaning, turn off the unit and disconnect its power supply.
- When removing the filter, do not touch metal parts in the unit. The metal edges are sharp.
- Do not use water to clean the inside of the indoor unit. This can destroy insulation and cause electrical shock.
- Do not expose the filter to direct sunlight when drying. This can shrink the filter.
- Any maintenance and cleaning of the outdoor unit should be performed by an authorized dealer or a licensed service provider.
- Any unit repairs should be performed by an authorized dealer or service provider.

Maintaining the Unit

Long Periods of Non-Use

If you plan not to use the unit for an extended period of time, do the following:

Clean all filters.

Turn on fan function until unit dries out completely.

Turn off the unit & disconnect the power.

Remove batteries from remote control.

Pre-Season Inspection

After long periods of non-use, or before periods of frequent use, do the following:

Check for damaged wires.

Clean all filters.

Check for leaks.

Replace batteries.

Ensure nothing is blocking the air inlets & outlets.

5.4 Troubleshooting

! CAUTION

If any of the following conditions occur, turn off the unit immediately.
- The wire is damaged or abnormally warm.
- You smell a burning odor.
- The unit emits loud or abnormal sounds.
- A power fuse blows or the circuit breaker frequently trips.
- Water or other objects fall into or out of the unit.

DO NOT ATTEMPT TO FIX THESE YOURSELF! CONTACT AN AUTHORIZED SERVICE PROVIDER IMMEDIATELY.

The following problems are not a malfunction, and in most situations will not require repairs.

Issue	Possible Causes
Unit does not turn on when pressing ON/OFF button.	The unit has a 3-minute protection feature that prevents the unit from overloading. The unit cannot be restarted within 3 minutes of being turned off.
The unit changes from COOL/ HEAT mode to FAN mode.	The unit may change its setting to prevent frost from forming on the unit. Once the temperature increases, the unit will start operating in the previously selected mode again. The set temperature has been reached, at which point the unit turns off the compressor. The unit will continue operating when the temperature fluctuates again.
The indoor unit emits white mist.	In humid regions, a large temperature difference between the room's air and the conditioned air can cause white mist.
Both the indoor and outdoor units emit white mist.	When the unit restarts in heat mode after defrosting, white mist may be emitted due to moisture generated from the defrosting process.
The indoor unit makes noises.	A rushing air sound may occur when the louver resets its position. A squeaking sound may occur after running the unit in heat mode due to expansion and contraction of the unit's plastic parts.
Both the indoor unit and the outdoor unit make noises.	Low hissing sound during operation: this is normal and is caused by refrigerant gas flowing through both indoor and outdoor units.
	Low hissing sound when the system starts, has just stopped running, or is defrosting: This noise is normal and is caused by the refrigerant gas stopping or changing direction.
	Squeaking sound: Normal expansion and contraction of plastic and metal parts caused by temperature changes during operation can cause squeaking noises.
The outdoor unit makes noises.	The unit will make different sounds based on its current operating mode.
Dust is emitted from either the indoor or outdoor unit.	The unit may accumulate dust during extended periods of non-use, which will be emitted when the unit is turned on. This can be mitigated by covering the unit during long periods of inactivity.
The unit emits a bad odor.	The unit may absorb odors from the environment (such as furniture, cooking, cigarettes, etc.) which will be emitted during operation.
	The unit's filters have become moldy and should be cleaned.
The fan of the outdoor unit does not operate.	During operation, the fan speed is controlled to optimize product operation.
Operation is erratic, unpredictable, or the unit is unresponsive.	Interference from cell phone towers and remote boosters may cause the unit to malfunction. In this case, try the following: • Disconnect the power, then reconnect. • Press the ON/OFF button on the remote control to restart operation.

Note: If a problem persists, contact a local dealer or MRCOOL® customer service. Provide them with a detailed description of the unit malfunction as well as your model number.

! CAUTION

Before contacting a repair company, check the following points.

Problem	Possible Causes	Solution
Poor Cooling Performance	**Temperature setting may be higher than ambient room temperature.**	Lower the temperature setting.
	The heat exchanger on the indoor or outdoor unit is dirty.	Use the Clean function by remote control to clean the affected heat exchanger.
	The air filter is dirty.	Remove the filter and clean it according to instructions.
	The air inlet or outlet of either unit is blocked.	Turn the unit off, remove the obstruction and turn it back on.
	Doors and windows are open.	Make sure that all doors and windows are closed while operating the unit.
	Excessive heat is generated by sunlight.	Close windows and curtains during periods of high heat or bright sunshine.
	Too many sources of heat in the room (people, computers, electronics, etc.)	Reduce the amount of heat sources.
	Low refrigerant due to leak or long-term use.	Check for leaks, re-seal if necessary, and top off refrigerant.
	Silence function is activated (optional function)	Silence function can lower product performance by reducing operating frequency. Turn off Silence function.
The unit is not working	**Power failure**	Wait for the power to be restored.
	The power is turned off.	Turn on the power.
	The fuse is burned out.	Call a technician to replace the fuse.
	Remote control batteries are dead.	Replace batteries
	The unit's 3-minute protection has been activated.	Wait three minutes after restarting the unit.
	Timer is activated.	Turn timer off.
The unit starts and stops frequently.	**There's too much or too little refrigerant in the system.**	Call a technician to check for leaks and recharge the system with refrigerant.
	Incompressible gas or moisture has entered the system.	Call a technician to evacuate and recharge the system with refrigerant.
	The compressor is broken.	Call a technician to replace the compressor.
	The voltage is too high or too low.	Install a manostat to regulate the voltage.
Poor heating performance	**The outdoor temperature is extremely low.**	Use auxiliary heating device.
	Cold air is entering through doors and windows.	Make sure that all doors and windows are closed during use.
	Low refrigerant due to leak or long-term use.	Call technician to check for leaks, re-seal if necessary, and top off refrigerant.
Indicator lamps continue flashing	The unit may stop operation or continue to run safely. If the indicator lamps continue to flash or error codes appear, wait for about 10 minutes. The problem may resolve itself. If not, disconnect the power, then connect it again. Turn the unit on. If the problem persists, disconnect the power and contact MRCOOL®.	
Error code appears and begins with the following letters in the display area: *E(x), P(x), F(x), EH(xx), EL(xx), EC(xx), PH(xx), PL(xx), PC(xx)*		

Note: If the problem persists after performing the checks and diagnostics above, turn off the unit immediately and contact MRCOOL®.

5.5 Error Display (Indoor Unit)

When the indoor unit encounters a recognized error, an error code will be displayed; the error codes are described in the tables below:

Display	Error Information	Solution
dF	Defrost	Normal Display, not error code
CL	Active Clean	
FP	Heating in Room Temperature under 46.4°F (8°C)	
FC	Forced Cooling	
AP	AP Mode of Wifi Connection	
CP	Remote Switched Off	
EH 00	IDU EEPROM Malfunction	TS01-IDU
EH 0A	Indoor EEPROM Parameter Error	TS01-IDU
EL 01	IDU & ODU Communication Error	TS02-S-INV
EH 02	Zero-Crossing Signal Detection Error	TS03
EH 03	IDU Fan Speed Out of Control	TS04-S-IDU
EC 51	ODU EEPROM Parameter Error	TS01-ODU
EC 52	ODU Coil Temperature Sensor (T3) Error	TS05-ODU
EC 53	ODU Ambient Temperature Sensor (T4) Error	TS05-ODU
EC 54	Comp. Discharge Temperature Sensor (TP) Error	TS05-ODU
EC 56	IDU Coil Outlet Temperature Sensor (T2B) Error (Multi-Zone)	TS05-ODU
EH 60	IDU Room Temperature Sensor (T1) Error	TS05-IDU
EH 61	IDU Pipe Temperature (T2) Sensor Error	TS05-IDU
EC 07	ODU Fan Speed Out of Control	TS04-ODU
EH 06	IDU Main Control Board & Display Board Communication Error	TS07
FH CC	Refrigerant Sensor Error	TS05-N10
EH C1	Refrigerant Sensor Detects Leakage	TS06-N10
EH C2	Refrigerant Sensor is Out of Range & Leakage is Detected	TS06-N10
EH C3	Refrigerant Sensor is Out of Range	TS05-N10
EC C1	Other IDU Refrigerant Sensor Detects Leakage (Multi-Zone)	TS06-N10
EL 0C	System Lacks Refrigerant	TS06-INV
PC 00	ODU IPM Module Protection	TS09-S
PC 01	ODU Voltage Protection	TS10-S
PC 02	Compressor Top (or IPM) Temperature Protection	TS11-S-INV
PC 04	Inverter Compressor Drive Error	TS12-S
PC 03	Pressure Protection (low or high pressure)	TS26-INV
PC 0L	Low Ambient Temperature Protection	LP
----	IDUs Mode Conflict (Multi-Zone)	TS14

For other errors:
The display board may show a garbled code or a code undefined by the service manual. Ensure that this code is not a temperature reading.

Troubleshooting:
Test the unit using the remote control. If the unit does not respond to the remote, the indoor PCB requires replacement. If the unit responds, the display board requires replacement.

LED Flash Frequency:

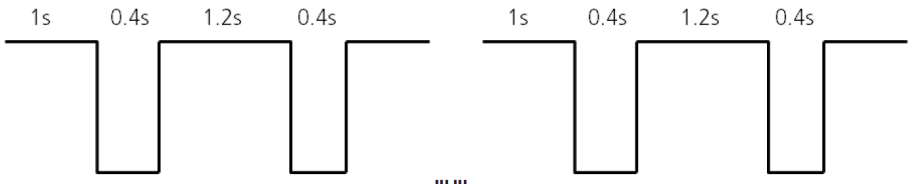

5.6 Error Display (Outdoor Unit with Auxiliary Board)

Display	Error Information	Solution
dF	Defrost	Normal display, not error code
FC	Forced cooling	
EC 51	ODU EEPROM Parameter Error	TS01-ODU
EL 01	IDU & ODU Communication Error	TS02-S-INV
PC 40	Communication Error between Outdoor Main Chip & Compressor-Driven Chip	TS31
PC 08	ODU Overcurrent Protection	TS08-S
PC 10	ODU Low AC Voltage Protection	TS10-S
PC 11	ODU Main Control Board DC Bus High Voltage Protection	TS10-S
PC 12	ODU Main Control Board DC Bus Low Voltage Protection/341 MCE Error	TS10-S
PC 00	ODU IPM Module Protection	TS09-S
PC 0F	PFC Module Protection	TS30
EC 71	Over Current Failure of ODU DC Fan Motor	TS04-ODU
EC 72	Lack Phase Failure of ODU DC Fan Motor	TS38
EC 07	ODU Fan Speed Out of Control	TS04-ODU
PC 43	ODU Compressor Lack Phase Protection	TS39
PC 44	ODU Zero Speed Protection	TS08-S
PC 45	ODU IR Chip Drive Failure	TS40
PC 46	Compressor Speed Out of Control	TS08-S
PC 49	Compressor Overcurrent Failure	TS08-S
PC 30	System High Pressure Protection	TS26-INV
PC 31	System Low Pressure Protection	TS26-INV
PC 0A	High Temperatue Protection of Condenser	TS27-INV
PC 06	Discharge Temperature Protection of Compressor	TS32
LC 06	High Temperature Protection of Inverter Module (IPM)	TS11-S-INV
PC 02	Compressor Top (or IPM) Temperature Protection	TS11-S-INV
PH 90	High Temperature Protection of Evaporator	--
PH 91	Low Temperature Protection of Evaporator	--
EC 52	ODU Coil Temperature Sensor (T3) Error	TS05-ODU
EC 53	ODU Ambient Temperature Sensor (T4) Error	TS05-ODU
EC 54	Comp. Discharge Temperature Sensor (TP) Error	TS05-ODU
EC 50	Open or Short Circuit of Outdoor Unit Temperature Sensor (T3, T4, TP)	TS05-ODU
PC 0L	Low Ambient Temperature Protection	LP

5.7 Quick Maintenance by Error Code

If you do not have the time to test which specific parts are faulty, you can change the required parts according to the error code. You can find the parts to replace by error code in the following table.

Part Requiring Replacement	Error Code									
	EH 00/ EH 0A	EL 01	EH 02	EH 03	EH 60	EH 61	EH 06	EL 0C	EC 56	FH CC
Indoor PCB	√	√	√	√	√	√	√	√	x	x
Outdoor PCB	x	√	x	x	x	x	x	x	√	x
Display Board	x	x	x	x	x	x	√	x	x	x
Indoor Fan Motor	x	x	x	√	x	x	x	x	x	x
T1 Sensor	x	x	x	x	√	x	x	x	x	x
T2 Sensor	x	x	x	x	x	√	x	√	x	x
T2B Sensor	x	x	x	x	x	x	x	x	√	x
Refrigerant Sensor	x	x	x	x	x	x	x	x	x	√
Reactor	x	√	x	x	x	x	x	x	x	x
Compressor	x	x	x	x	x	x	x	x	x	√
Additional Refrigerant	x	x	x	x	x	x	x	√	x	x

Part Requiring Replacement	Error Code									
	EC 53	EC 52	EC 54	EC 51	EC 07	PC 00	PC 01	PC 02	PC 03	PC 04
Outdoor PCB	√	√	√	√	√	√	√	√	√	√
Indoor Fan Motor	x	x	x	x	x	x	x	x	x	x
Outdoor Fan Motor	x	x	x	x	√	√	x	√	x	√
T3 Sensor	x	√	x	x	x	x	x	x	x	x
T4 Sensor	√	x	x	x	x	x	x	x	x	x
TP Sensor	x	x	√	x	x	x	x	x	x	x
Reactor	x	x	x	x	x	x	√	x	x	x
Compressor	x	x	x	x	x	√	x	x	x	√
IPM Module Board	x	x	x	x	x	√	√	√	x	√
High Pressure Protector	x	x	x	x	x	x	x	√	x	x
Low Pressure Protector	x	x	x	x	x	x	x	x	√	x
Additional Refrigerant	x	x	x	x	x	x	x	x	√	x

Part Requiring Replacement	Error Code				
	PC 06	PC 08/44/49	PC 0A	PC 0F	PC 40
Outdoor PCB	√	√	√	√	√
Outdoor Fan Motor	X	√	√	X	X
T3 Sensor	X	X	√	X	X
TP Sensor	√	X	X	X	X
Pressure Sensor	X	X	X	X	X
Reactor	X	√	X	√	X
Compressor	X	X	X	X	X
IPM Module Board	X	√	X	X	√
High Pressure Valve Assembly	√	X	X	X	X
High Pressure Protector	X	X	X	X	X
Low Pressure Protector	X	X	X	X	X
Additional Refrigerant	√	X	√	X	X
Electric Control Box	X	X	X	X	√

Part Requiring Replacement	Error Code				
	PC 41	PC 43	PC 10/11/12	PC 30	PC 31
Outdoor PCB	√	√	√	√	√
Outdoor Fan Motor	X	X	X	√	X
T3 Sensor	X	X	X	X	X
TP Sensor	X	X	X	X	X
Pressure Sensor	X	X	X	X	X
Reactor	X	X	√	X	X
Compressor	X	√	X	X	X
IPM Module Board	X	X	√	X	X
High Pressure Valve Assembly	X	X	X	X	X
High Pressure Protector	X	X	X	√	X
Low Pressure Protector	X	X	X	X	√
Additional Refrigerant	X	X	X	X	√

MRCOOL®

COMFORT MADE SIMPLE

DIY® Series Single-Zone Mini-Split System

The design and specifications of this product and/or manual are subject to change without prior notice.
Consult with the sales agency or manufacturer for details.