INDUCTION HARDWARE

Install Guide

French Door Fridge



At Induction Hardware, our mission is to make the next generation of appliances around induction electric technology. Everything we make is all electric and focused on building the best appliances for the future. We believe that Induction tech is a massive upgrade in the world of appliances and is the next level in living a healthier, safer and more efficient lifestyle

APPLIANCE SHOWROOM:
WWW.INDUCTIONHARDWARE.COM
12920 OLD VIRGINIA ROAD, SUITE 160
RENO, NEVADA 89521, USA

CONTACT:
(775) 898-7562
INFO@INDUCTIONHARDWARE.COM

Table of Contents

Installation Guide **2**

Safety Instructions 3
Pre-Install 4
Tool List 6
Cabin Dimensions 7
Electrical & Water Location 8
Product Dimensions 9
Unpacking 21
Removing Freezer door and Vent Covers 26
Anti-Tip Mounting 29
Prepping Water & Power 31
Installation 32
Panel Preparation 40
Refrigerator Panel Dimensions 45
Freezer Panel Dimensions 46
Installing the Door 48
Installing Freezer Door 52
Attaching Door Trim 56
Hinge Adjustment 57
Dual Cabin Install 64

INDUCTION HARDWARE
www.inductionhardware.com

12920 OLD VIRGINIA ROAD, SUITE 160
RENO, NEVADA 89521, USA

Clean energy. **Clear** results.



The **Future** of Cooking

Installation Guide



Installation Made Clear.

Proper installation ensures your Induction Hardware appliance performs exactly as designed. This guide provides the key steps and requirements to help installers complete the process safely and correctly. For additional resources, installation videos, and the most up-to-date documentation, please visit our website.

Refrigerator Safety Instructions

Before you begin read these instructions completely and carefully. Your safety and the safety of others are very important. We have provided many important safety messages in this manual and on your appliance. Always read and obey all safety messages as well as observe all local governing codes and ordinances.



This symbol indicates that dangerous voltage constituting a risk of electric shock.



This symbol indicates that there are important operating and maintenance instructions in the literature.

Installation of this refrigerator requires basic mechanical and electrical skills. Proper installation is the responsibility of the installer. Product failure due to improper installation is not covered under the appliance warranty.

Disposing the packaging materials:
The package has been designed to protect the product during transport. The packaging materials used for the product do not harm the nature during disposal and they need to be recycled.

All plastic packaging materials, bags etc. must be disposed safely and kept out of the reach of children and any pets.



IMPORTANT
The refrigerator MUST be installed to allow for future removal from the enclosure if service is required. If you received a damaged fridge, you should immediately call Induction Hardware so that we may assist you as swiftly as possible.



WARNING
This installation manual has been prepared to help installation teams. The User Manual provided with the product must also be taken into consideration. You may get seriously injured and your product may get damaged if you ignore the warnings given in this manual. Please read the following carefully.

FOR YOUR SAFETY
Read and observe all CAUTIONS and WARNINGS shown throughout these instructions. While performing installations described in this booklet, gloves and safety glasses or goggles should be worn. Make sure that your product is suitable for your local mains. The product must be installed by a qualified technician according to the installation instructions. The product may tip over since it is quite heavy. For this reason, precautions must be taken against tipping over. The doors of the product must be kept closed until it reaches the destination and it must be transported in accordance with the installation instructions.

Pre-Install Requirements

WARNING - R600a Refrigerant

This product contains R600a isobutane refrigerant, which is a very eco-friendly natural gas. However, it is also flammable. Please follow the warnings given below:

- If the product has been transported horizontally, you must wait for 4 hours minimum before plugging it in.
- The following instructions must be followed during installation:
- Dimensions of the installation area must be suitable.
- Dimensions, features and position of the object used to support and fix the product to this area must be suitable.
- Minimum clearances between product parts and surrounding structures must be suitable.
- Minimum dimensions and proper organization of ventilation holes must be observed.
- The product must be connected to the mains power, and corresponding connections of other components must be suitable.
- The product must be disconnectable from the power supply after installation.
- The socket or fuse must be accessible to de-energize the product.
- Extension cables or ungrounded (two-terminal) adapters must not be used.

Installation Place

You must follow the instructions below:

- The floor on which the product will be installed must be capable of bearing 1,200 pounds (544 kg) minimum.
- Kitchen floor and the bottom of the product must be at the same level. Otherwise, problems may occur with the air suction of the product.
- There must be no objects preventing the installation of the product at the back and on the side walls of the product's installation place.
- The power socket must be at the correct place.
- Dimensions of the furniture where the product will be installed must be in strict conformity with the dimensions given in the manual.
- Do not install the product with the fridge and the freezer are adherent next to each other. Otherwise, condensation and damage may occur in the product. (Please see "Dual Cabin Installation" for detailed information)
- Flatness of the floor where the product will be installed must be checked with a Bubble Level Tool.
- Installation area must not be subjected to direct sunlight and it must be away from heat sources, ovens, radiators etc.
- The ambient temperature must be between 55°F (13°C) and 110°F (43°C). Otherwise,
- function errors may arise when the product is running.
- If it is not possible to avoid installing the product near a heat source, the minimum clearances given below must be maintained between the product and the said source:
- 11/4" (3 cm) from electric hobs or ovens 1 1/4"
- 12" (30 cm) from gas or fuel operated hobs or ovens

Please observe the following rules:

- The power socket or fuse must be easily accessible in case of an emergency; it must not be hidden behind the product.
- Plug or cable must not touch the back surface of the product. Otherwise, it may get damaged due to the vibration of the product.
- Do not connect the plugs of other appliances behind this product. If the humidity level is high where the product is used, corrosion may be seen on the outer surface of the product. Keep the installation room dry and well-cleaned to avoid corrosion.

To avoid the risk of electric shock:

- Connect the plug to a grounded 3-pin socket.
- Do not remove the ground terminal of the plug.
- Do not use adapters.
- Do not use extension cables.

Pre-Install Warnings



Attention
Failure to follow these instructions may result in death, fire or electric shock. Connecting the grounding conductor of the equipment to an improper place may lead to electric shock. Please have the grounding checked by a qualified electrician or service technician if you have any doubt about the proper grounding of the product.

Installation, repair and other procedures performed by unqualified persons may cause danger. Before installing the appliance, make sure that the voltage, load and circuit current parameters on the data plate are in compliance with the power mains in your house.

The appliance is provided with a NEMA 5-15 P plug and a 3-pin power cable which is in the UL list and ready to be connected to a 120 V, 60 Hz power supply. Fuse is 15 A. The appliance must be connected to a 3-pin socket. The plug must be installed only by a licensed electrician. If the electrical wiring or the electric power supply of the house needs alteration, the necessary procedures must be performed by a qualified electrician.



Attention
Do not install your refrigerator:

- In open areas
- In environments where water is dripping
- In environments where temperature is lower than 55° F (0°C)

Furniture:
Make sure that the furniture where you will install the appliance has been safely mounted in your kitchen. Your furniture must be connected to the floor and the wall properly and with suitable connections.

For the best installation, clearances between the furniture and the product must be in compliance with the values specified in the installation instructions.

Side walls must be free of clearances and their surfaces must be flat. Minimum thickness of the side walls must be 5/8” (16 mm). Minimum thickness of the doors to be attached to the product must be 5/8” (16 mm) .



Electrical Connection:

- Never use an extension cable.
- The power socket must definitely be grounded and checked by an authorized person.
- Location of the electrical wiring must comply with the dimensions specified in the manual.

Risk of electric shock
Electrical grounding is necessary and must be done properly. This appliance is equipped with a three-pin plug to protect you against possible electric shocks.

- Do not remove the round grounding terminal from the plug.
- Do not use two-pin grounding adapters.
- Do not use extension cables to energize the product.



Attention
Do not connect the grounding cable to the gas pipe. Please have the grounding checked by a qualified electrician if you are not sure about the grounding of the product. Do not install a fuse on the neutral line or grounding circuit.



Important!
Please wait for 3-6 hour before energizing the product to protect it against possible damages. This way, the refrigerant and the lubricants in the system get balanced.

Water Connection

- Pressure of the water mains must be in compliance with the values specified in the manual.
- Location of the water system must comply with the dimensions specified in the manual.

Tool List

Tools to be used when installing the product are as follows:



Cordless Drill



Safety Goggles



½" Wrench



Hammer



Ladder



Ø2.4 Drill bit



Ø8.0 Drill bit



Box Cutter



Safety Gloves



Tape measure



Star bit





Bubble Level Tool



Wheelbarrow



Tape



Flat Head bit



Plum groove bit

Cabin Dimensions

Cabin dimensions below must be checked before starting the installation.

Category		30in Built In	36in Built In
A	width	30" (762mm)	36" (914mm)
B	depth	25" (635mm)	25" (635mm)
C	height	84" (2134mm)	84" (2134mm)

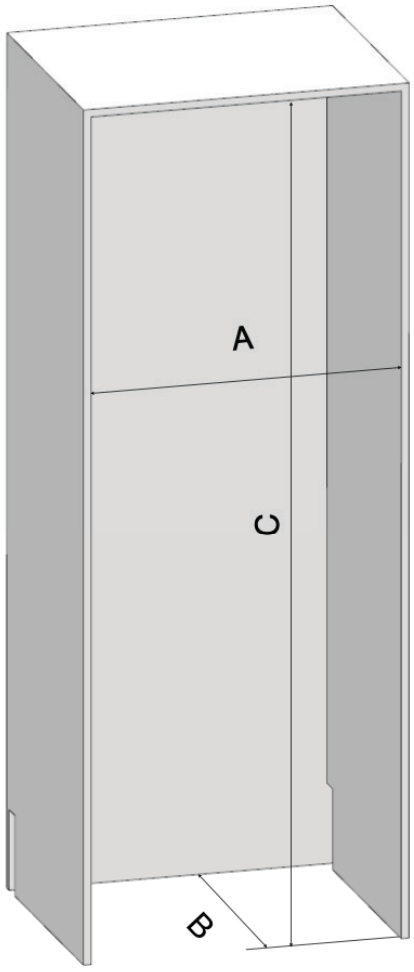

Electrical & Water Location

Electrical Location:
Location of the electrical wiring must be within the range given below:

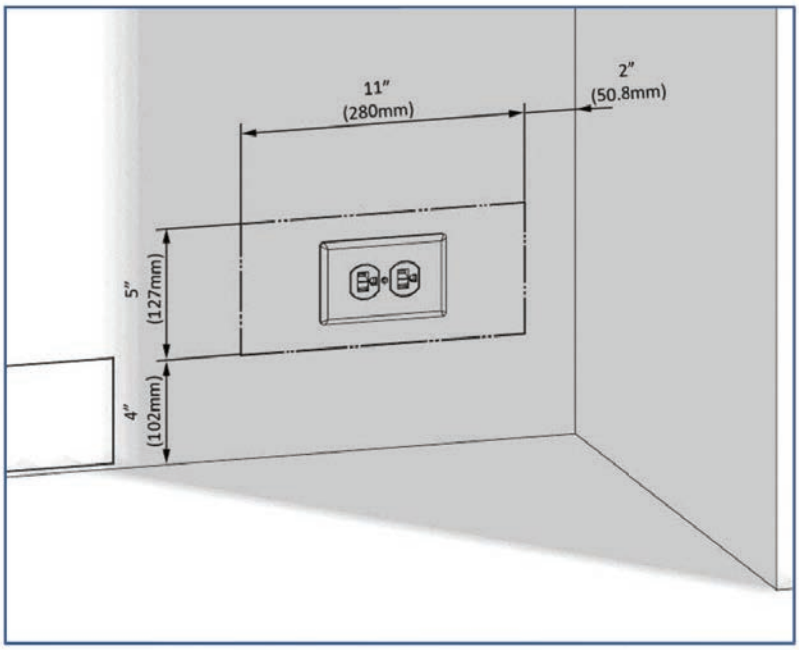

Attention
Do not use extension cables or two-pin adaptors and do not remove the ground terminal of the grounding cable.

Attention
A qualified electrician must ensure that the poles of the socket are connected correctly. Verify that the grounding of the socket is correct.

Water Location:
The water connected to the water mains must be potable. Location of the water system must be within the range given below. Water system of the refrigerator must be connected to the water mains system in the house. The user must be able to switch it on/off with the valve when necessary. Objects that might pierce the water hoses or cause them to twist must not be present where the water line is installed. Pressure of the water system must be between 25-80 psi (1.7-5.5 Bar). If the water pressure exceeds 80 psi, install a pressure limiting device or water impact protector to the inlet valve. Never install the product or operate the appliance if it is possible for the water pressure to exceed 120 psi.

Warning
Make sure that there is no water leakage when making the water connections. Otherwise, there will be water on the floor and the furniture will get damaged. You will need a hose with a minimum length of 60" (1.5 meters) and a diameter of ¼" for water connections of the product during installation. A connector that has a thread with an external diameter of ¼ must be used to connect the hose end to the product. Before completing the installation, make sure that water flows and there is no water leakage.

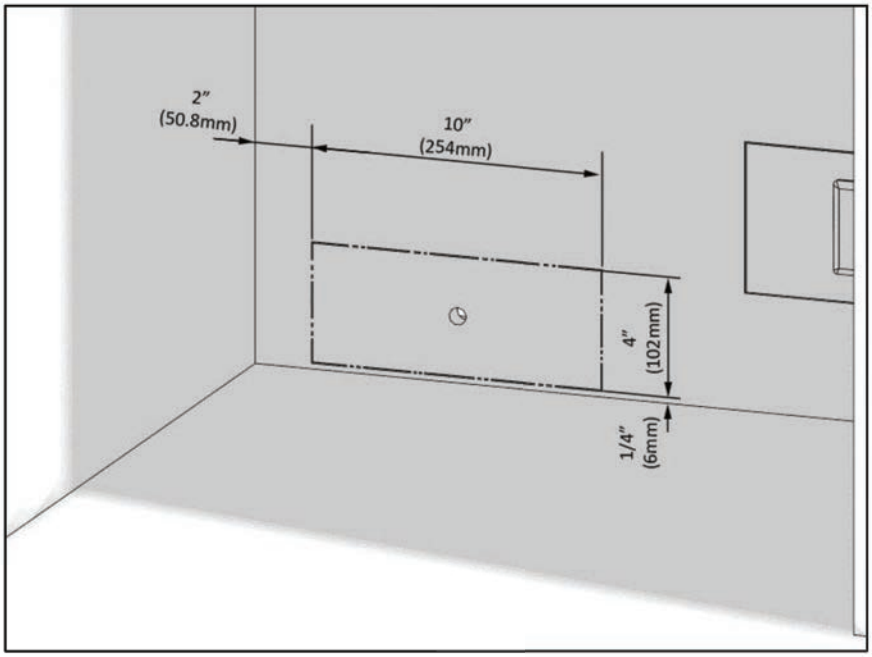

Flatness of the floor where the product will be installed must be checked with a Bubble Level Tool. Uprightness of the furniture flanges must be checked with a Bubble Level Tool. If the flatness and uprightness of the product is not proper, problems may arise with the installation.

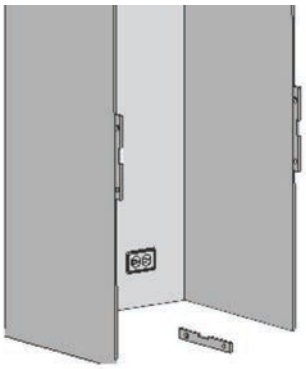

Product Dimensions

Category	30in Built In	36in Built In
A	29 3/4” (756mm)	35 3/4” (908mm)

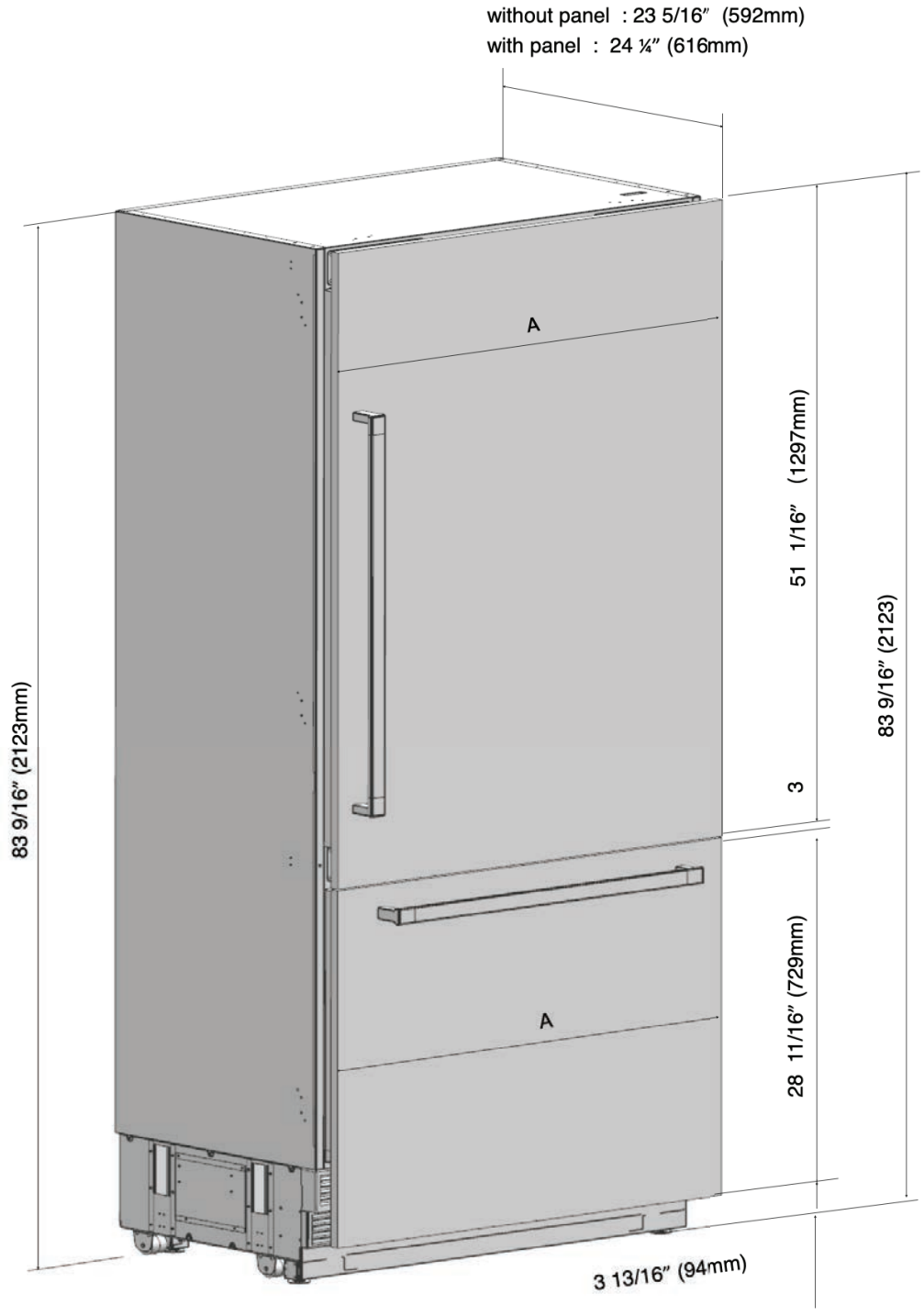

Product Dimensions

without panel :23 5/16" (592mm)
with panel : 24 ¼" (616mm)

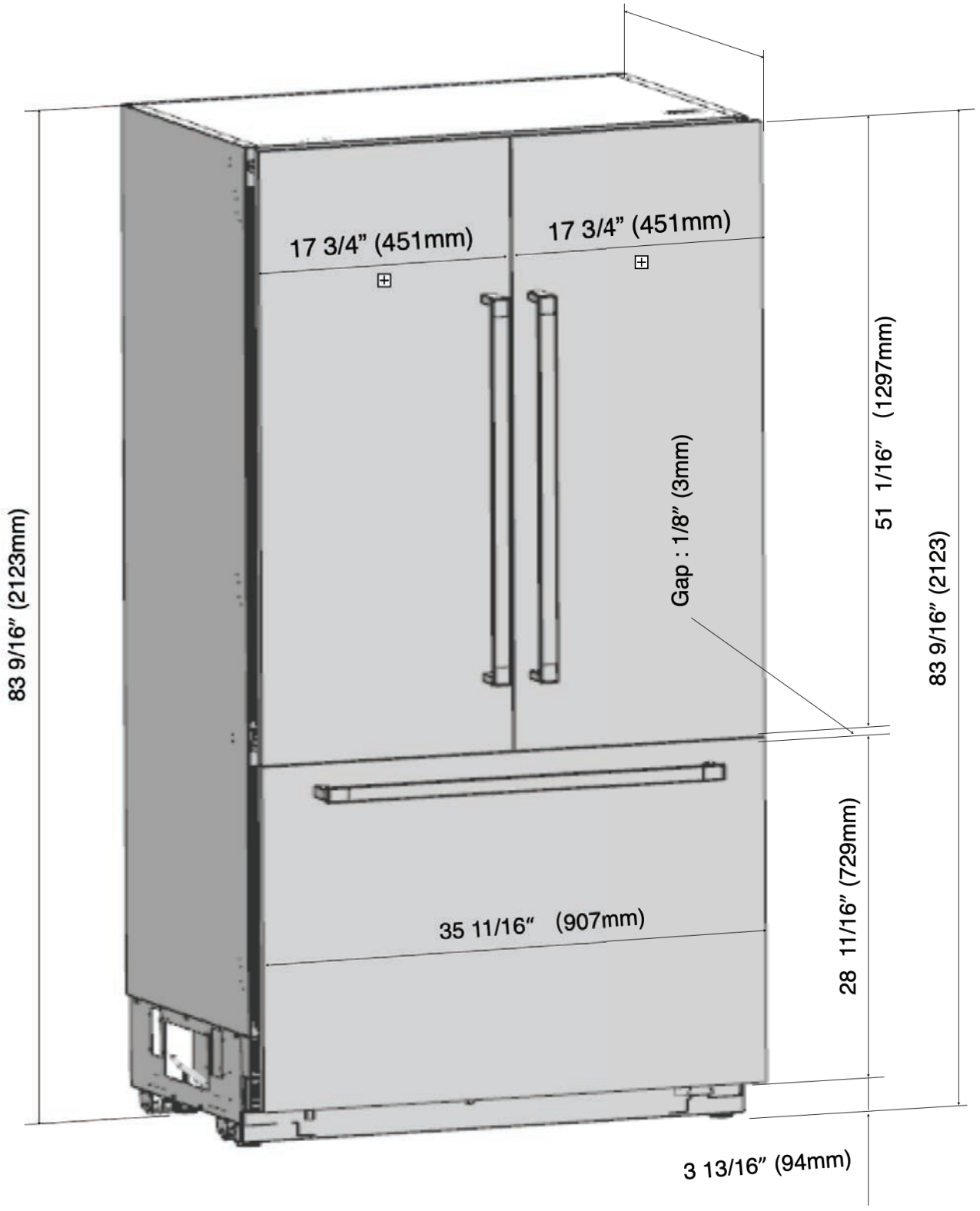

Product Dimensions

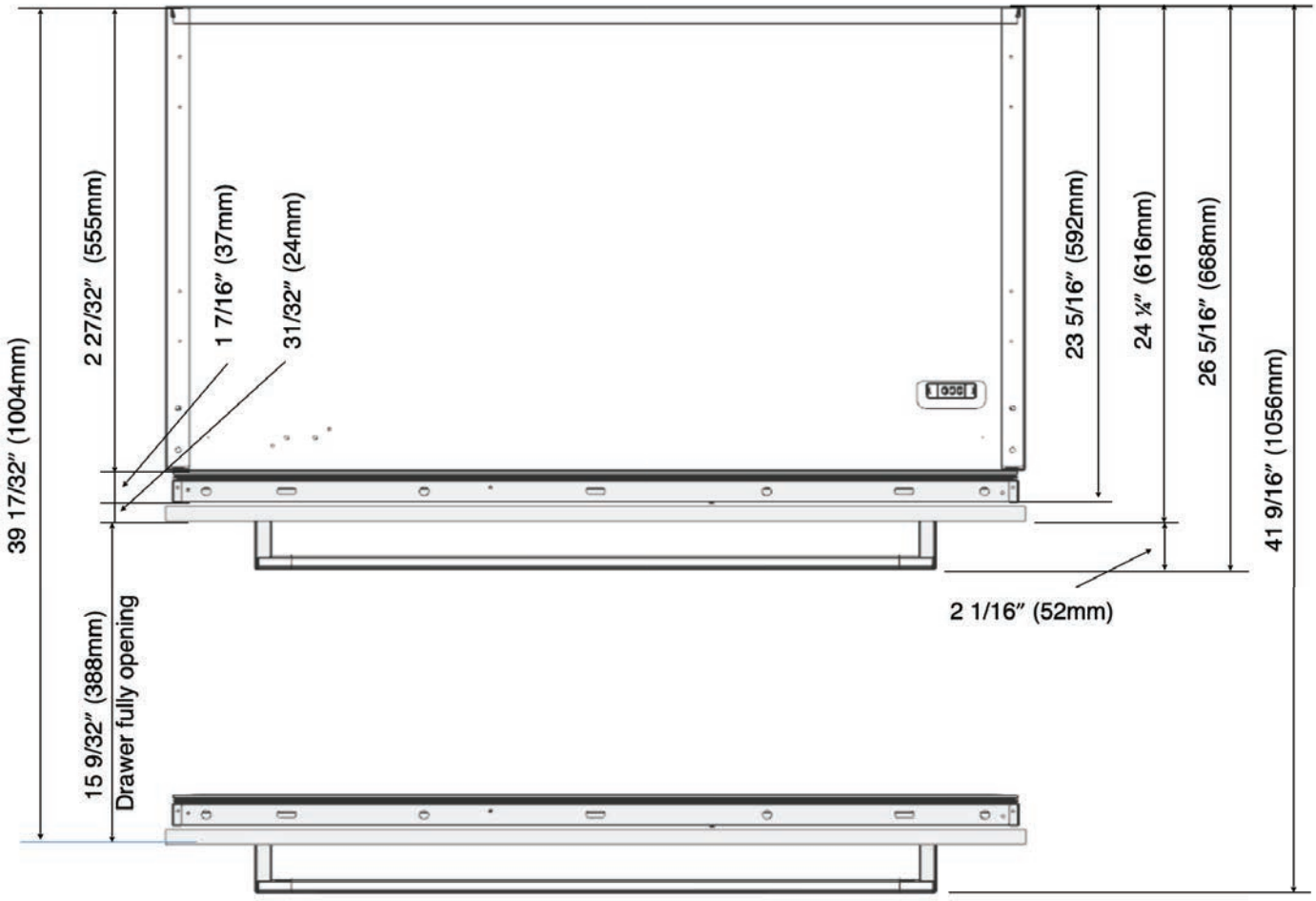

Category	30in Built In	36in Built In
A	15 9/32" (388mm)	15 9/32" (388mm)

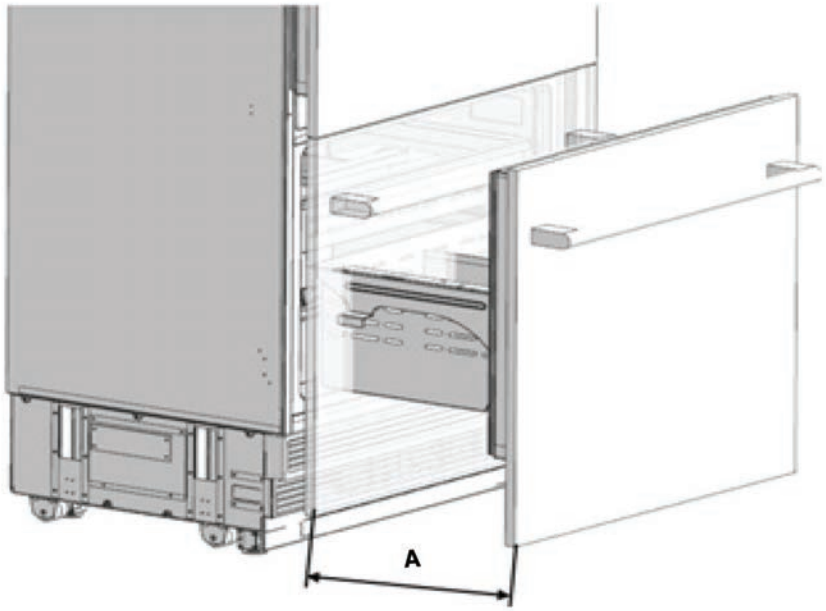

Product Dimensions

Category	30in Built In	36in Built In
A	32 7/16” (824mm)	38 7/16” (976mm)
B	29 3/4“ (756mm)	35 3/4“ (908mm)
C	55 1/32” (1398mm)	61” (1550mm)

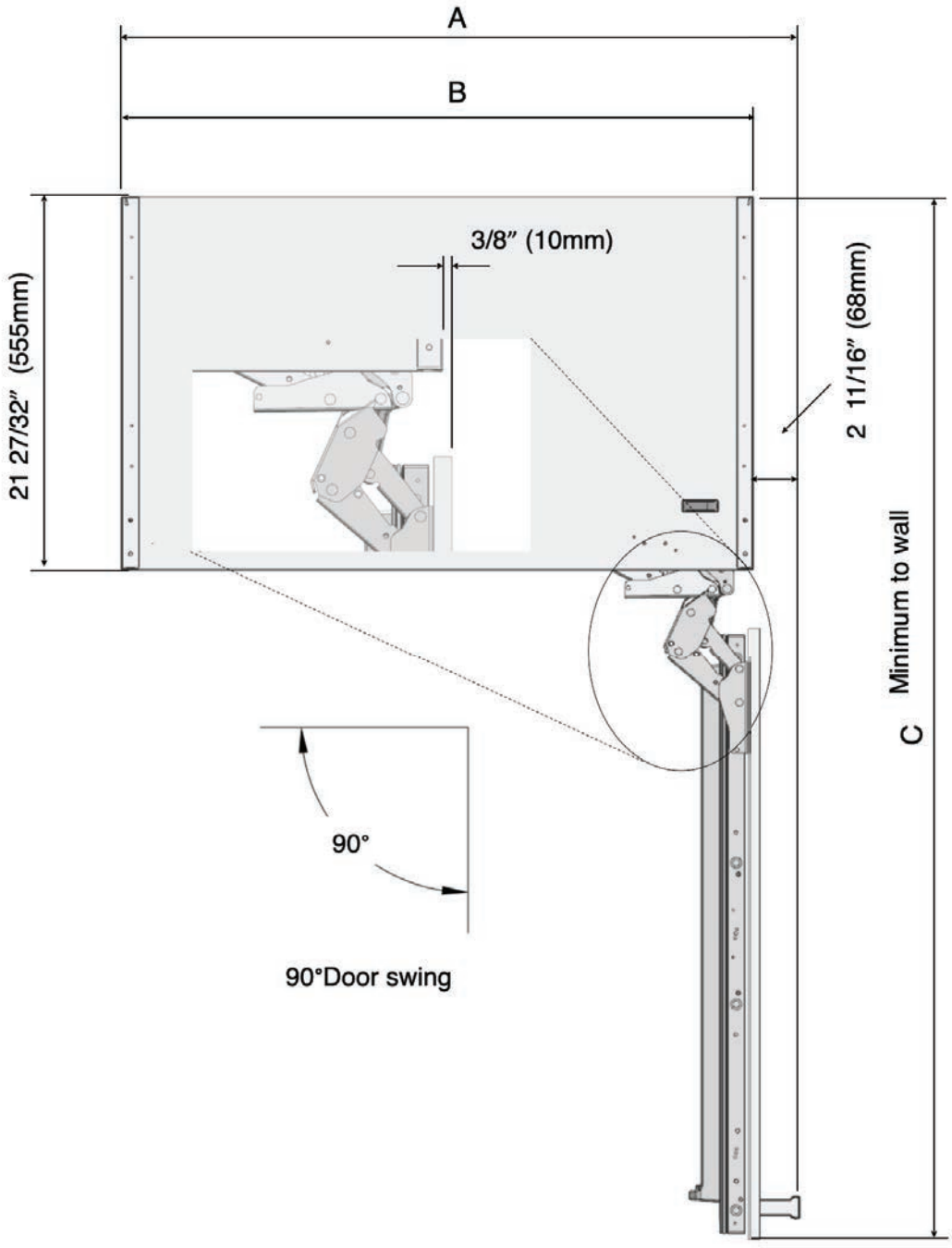

Product Dimensions

Category	30in Built In	36in Built In
A	443/8” (1127mm)	54 3/4” (1391mm)
B	29 3/4“ (756mm)	35 3/4“ (908mm)
C	14 5/8” (371mm)	19” (483mm)
D	52 11/16” (1338mm)	57 11/16” (1466mm)

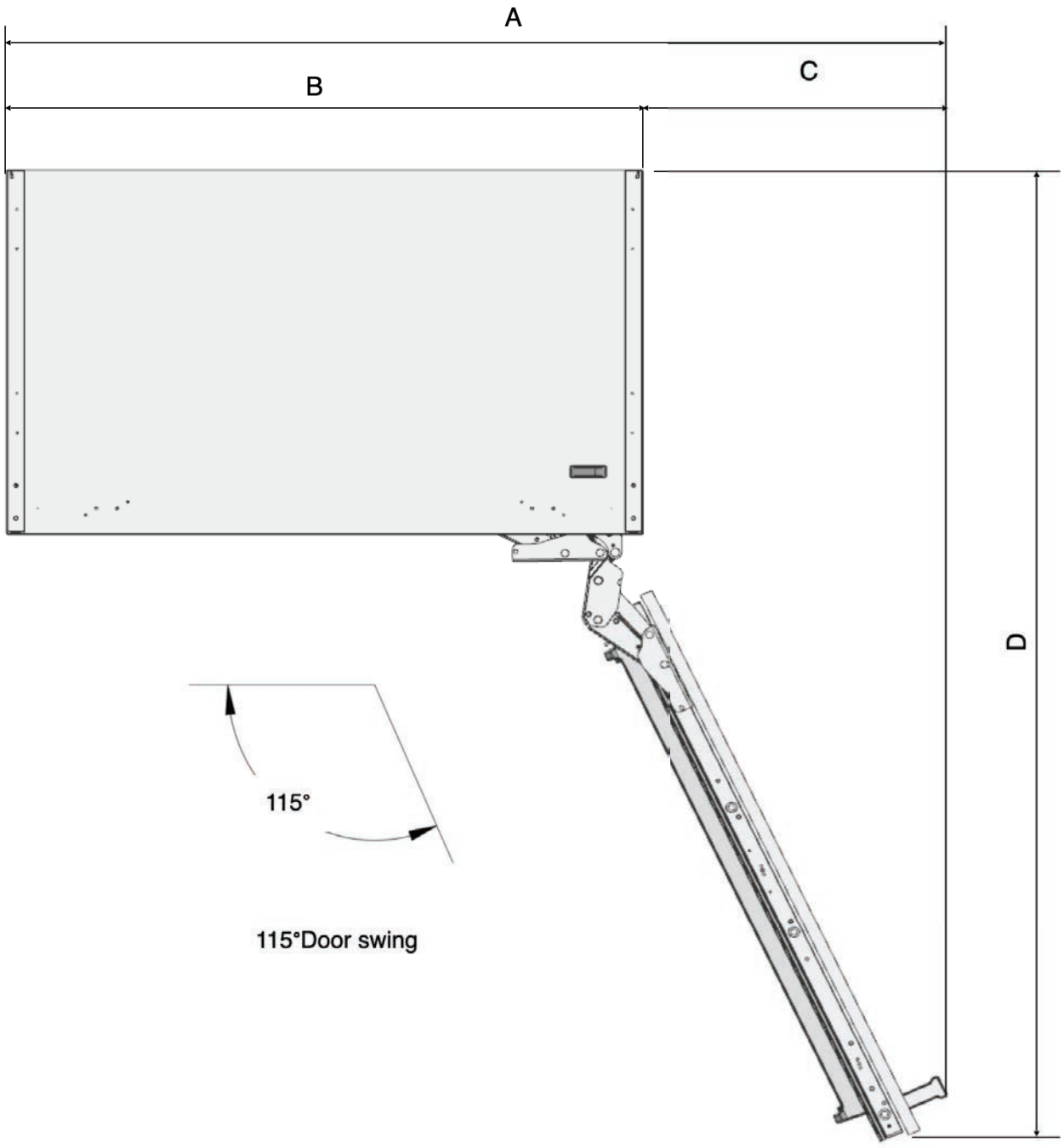

Product Dimensions

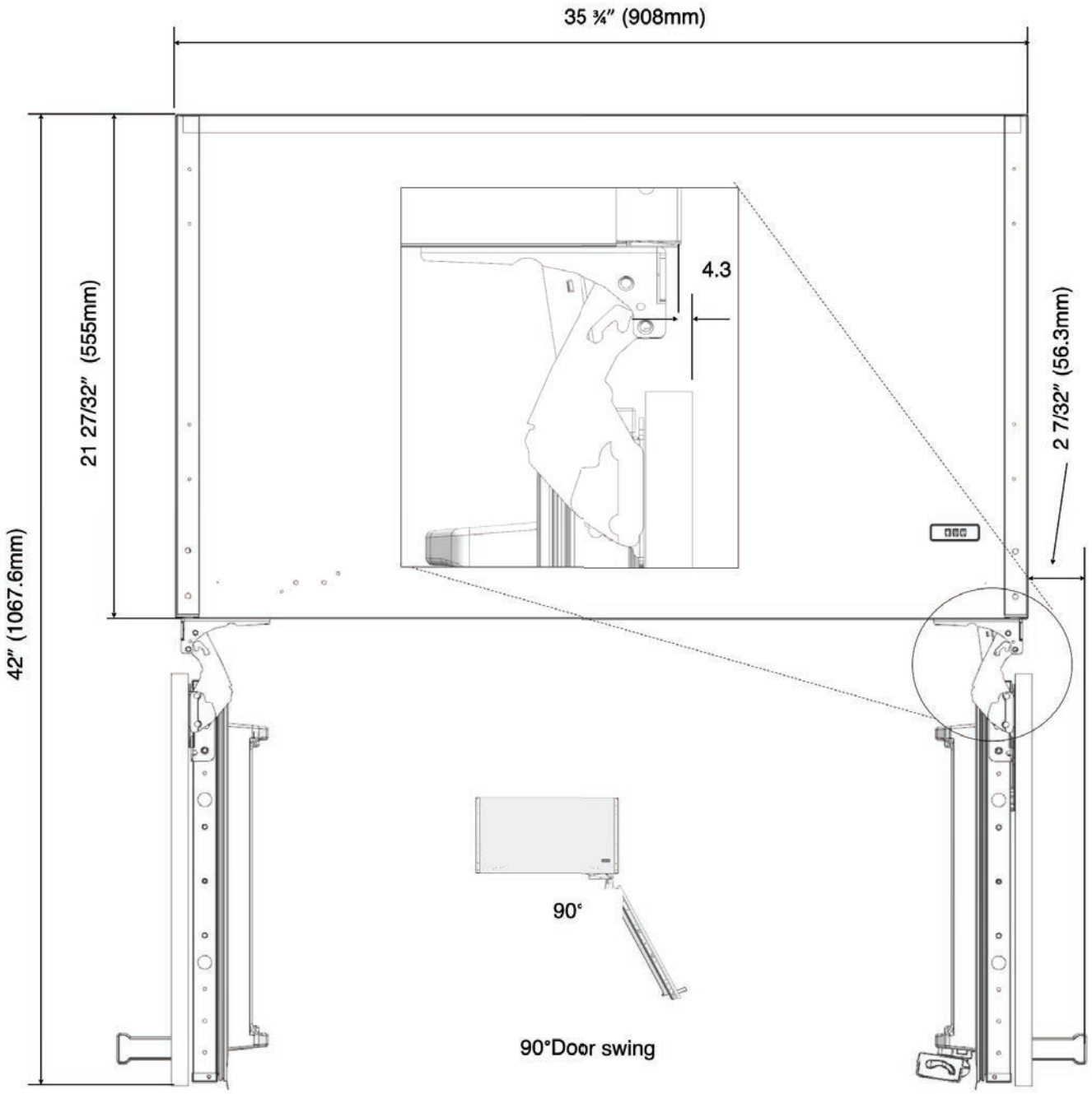

Product Dimensions

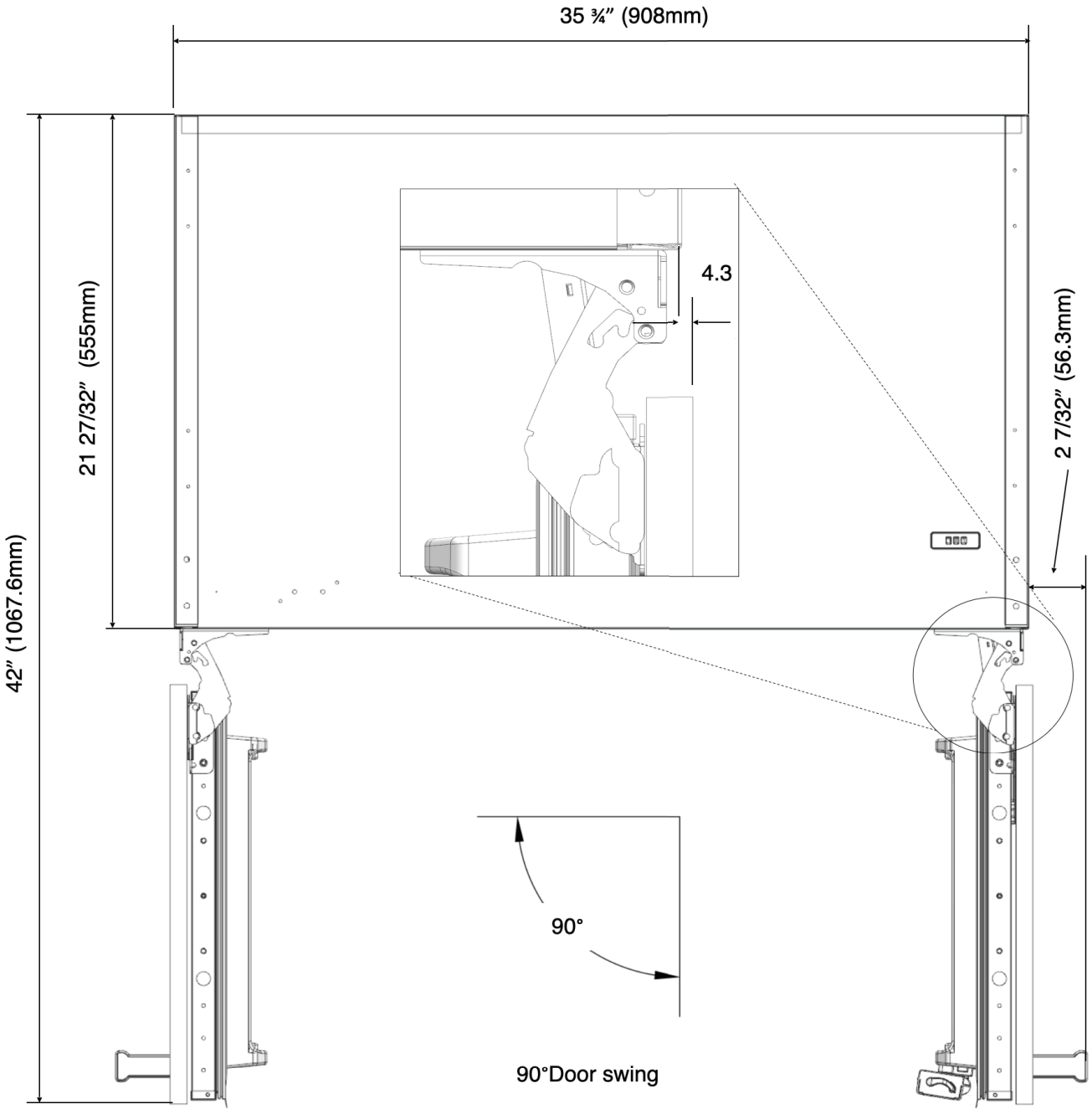

Product Dimensions

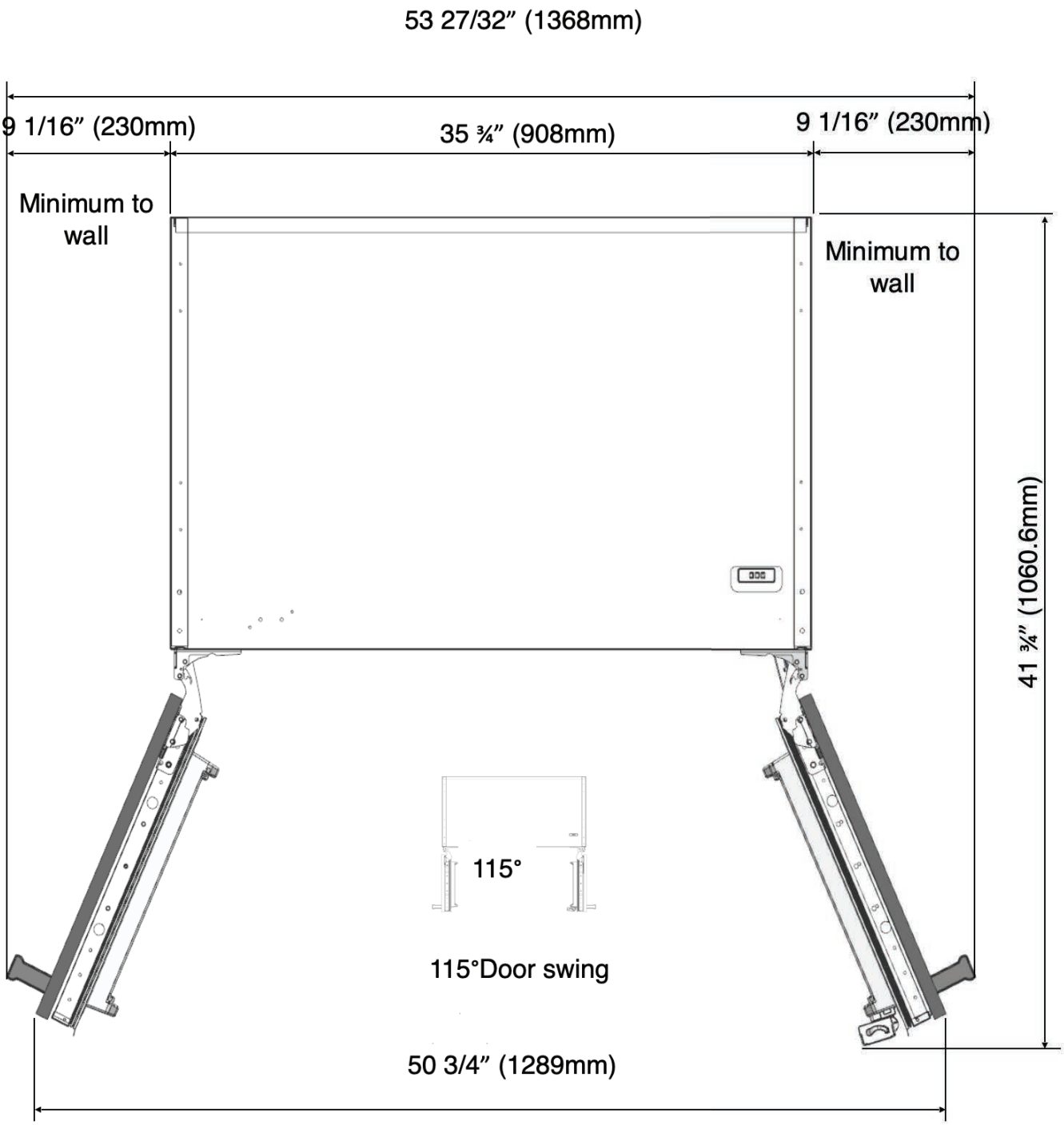

Product Dimensions

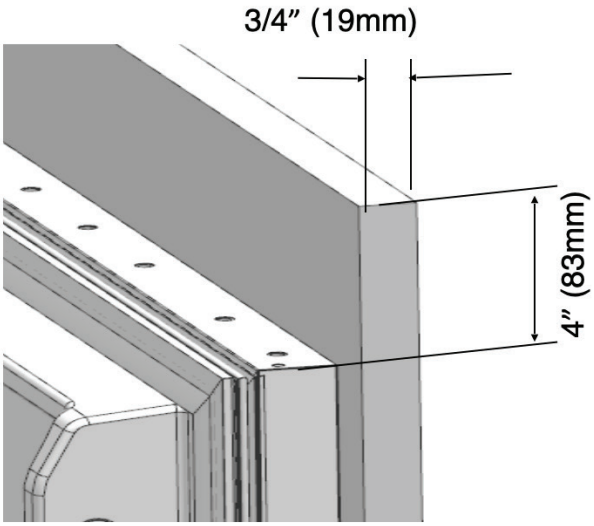

Assembly dimension between
Wood panel and fridge door

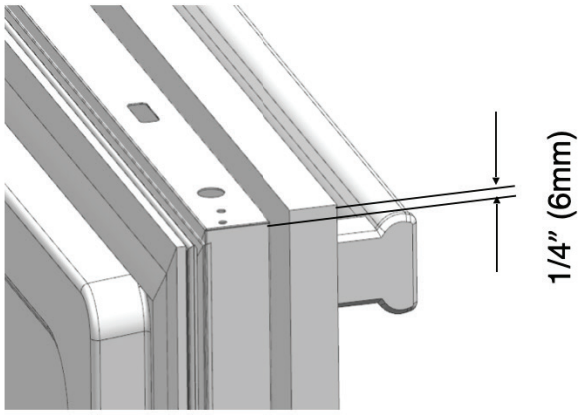

Assembly dimension between
Wood panel and freezer door

Product Dimensions

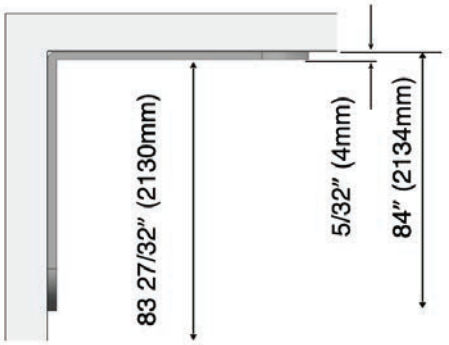

Anti tip bracket location



Minimum height
adjustment for leveling

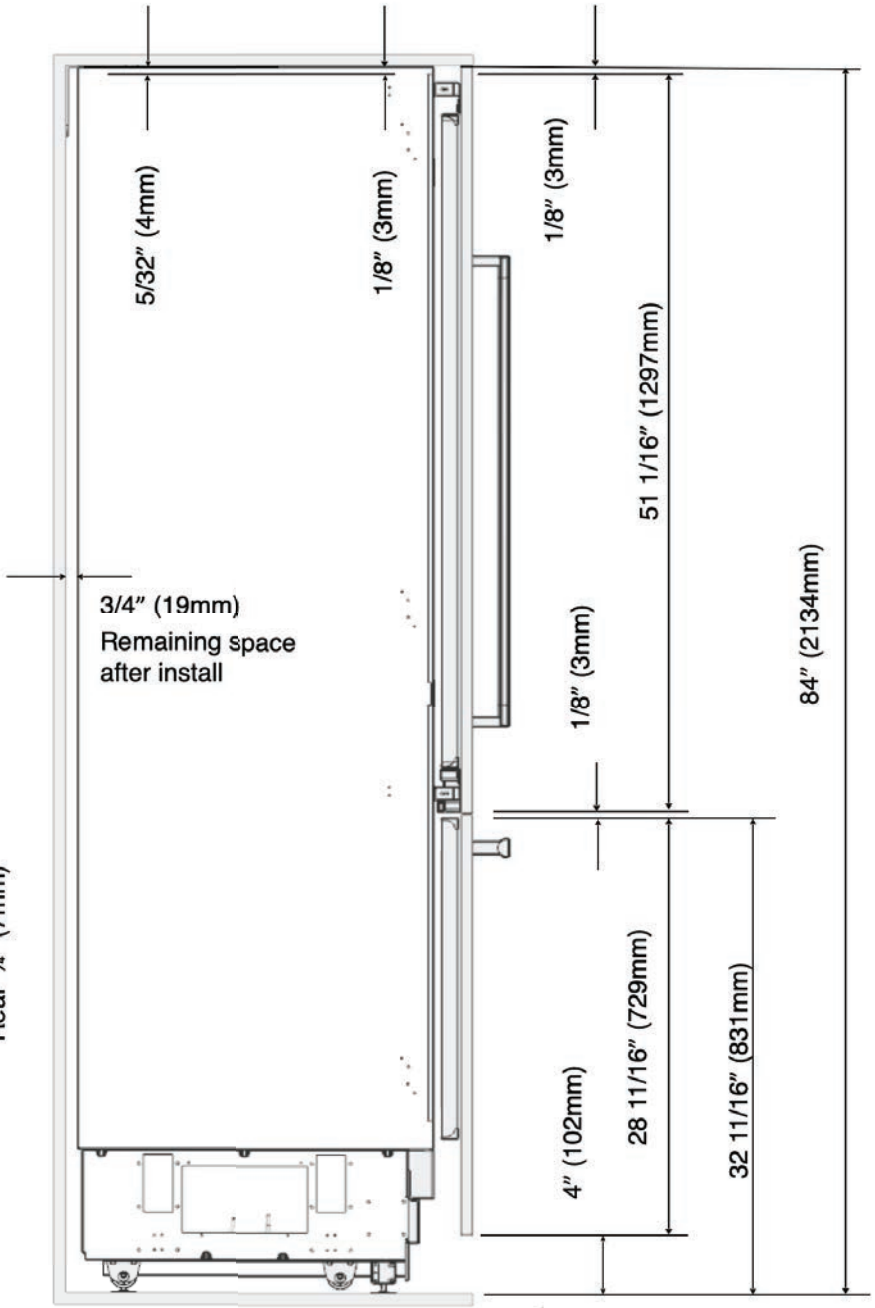

Product Dimensions

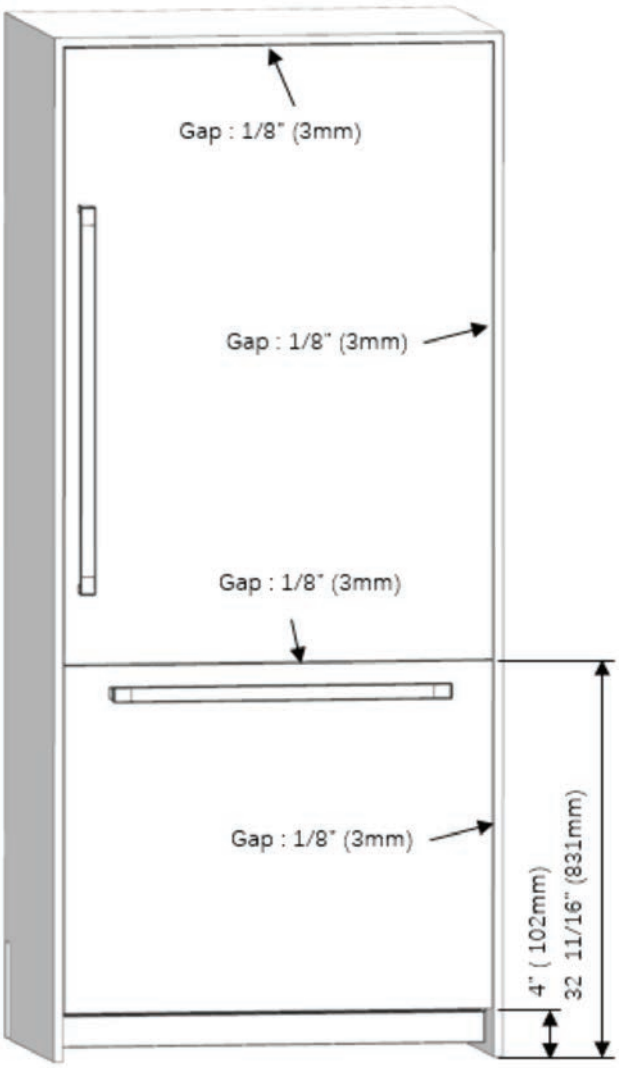

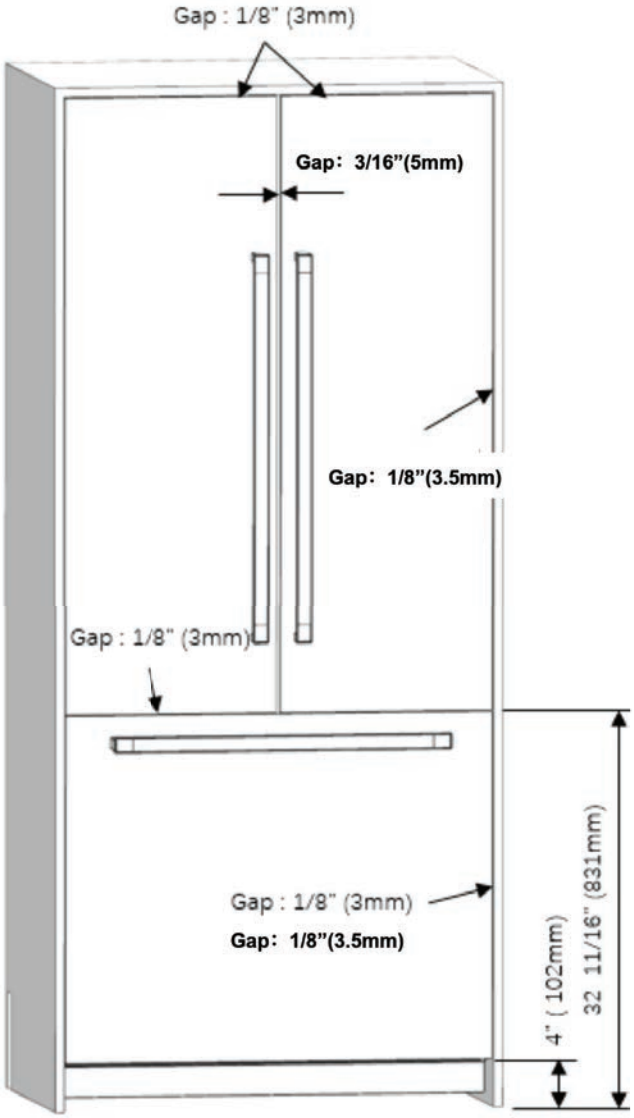

Product Dimensions

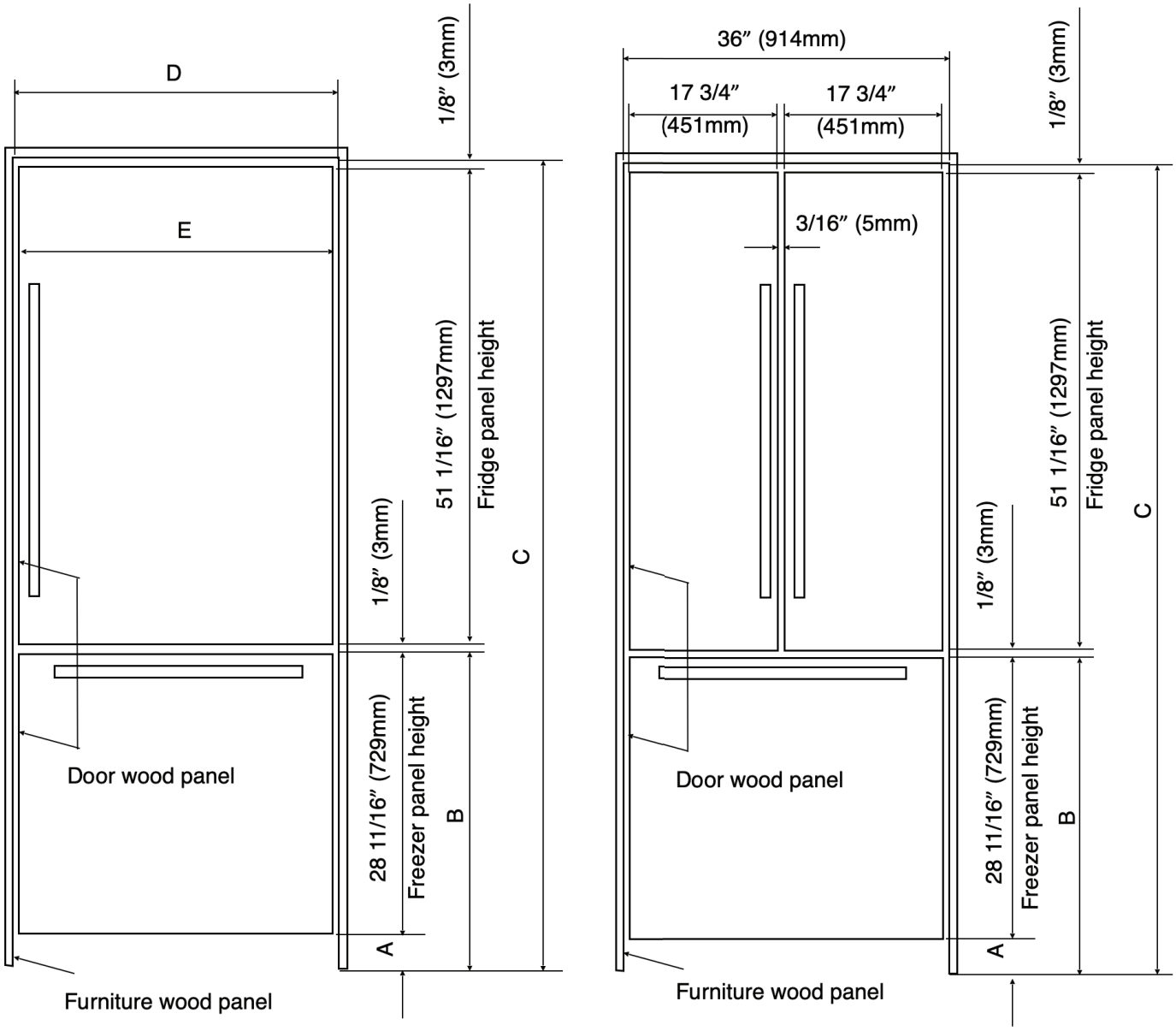

	A	B	C
standard	4” (102mm)	32 11/16” (831mm)	84” (2134mm)
minimum	3 13/16”(97mm)	32 1/2“ (826mm)	83 13/16“ (2129mm)
maximum	5 3/8“ (137mm)	34 1/8“ (866mm)	85 3/8“ (2169mm)

Category	30in Built In	36in Built In
D	30” (762mm)	36” (914mm)
E	29 3/4” (756mm)	35 3/4” (908mm)

Unpacking

Warning
At least two people must carry the refrigerator.





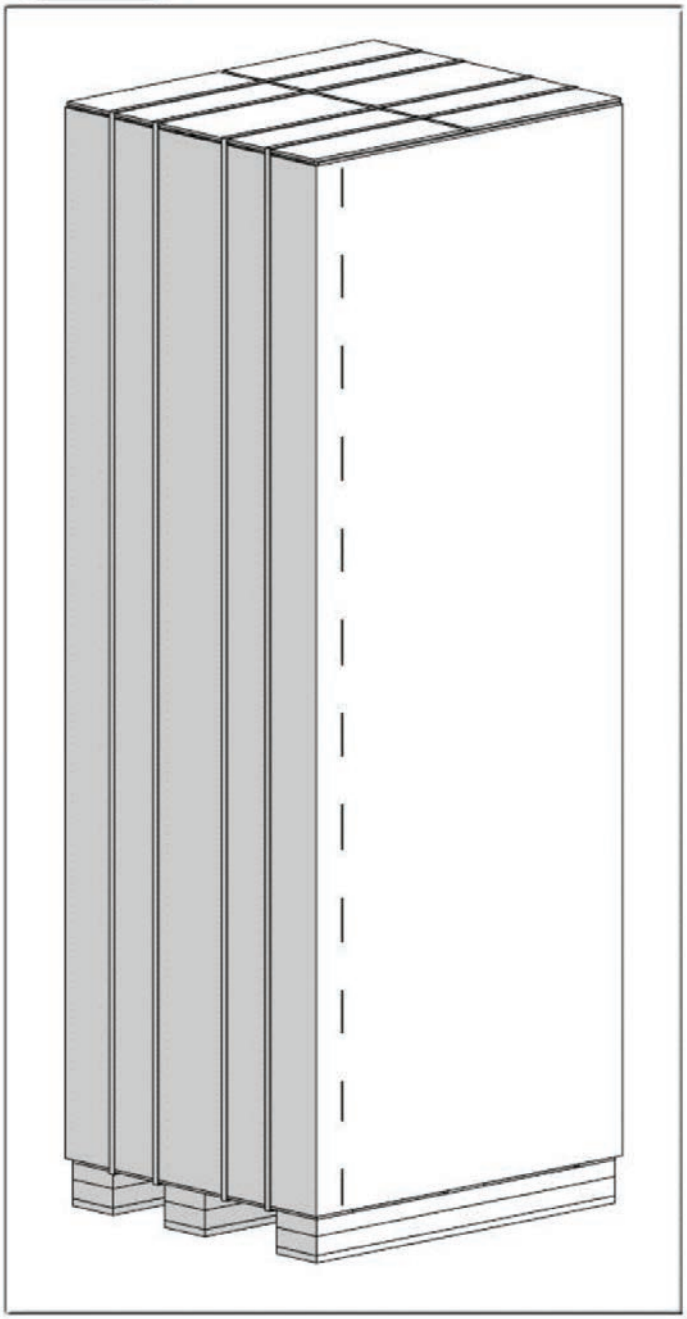

- Use a box cutter to remove the tapes.
- Cut the Packing Board with a Box Cutter through the section illustrated in dotted lines and remove it.
- Remove the Packaging Polystyrene material.

Attention:
Do not remove the tape of the upper door on the product until the refrigerator is placed into the cabin. Otherwise there is a huge risk of the unit tipping over.

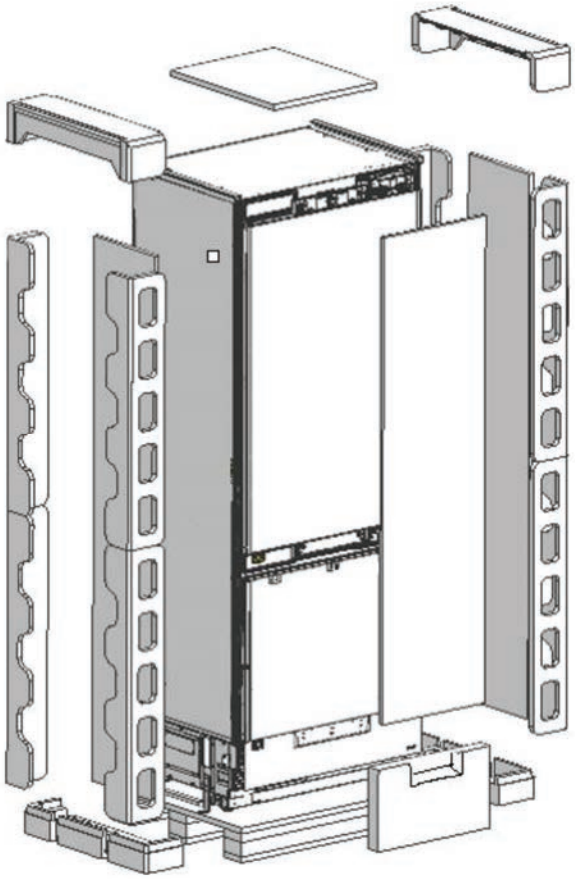

Parts - Rear Wall Connectors

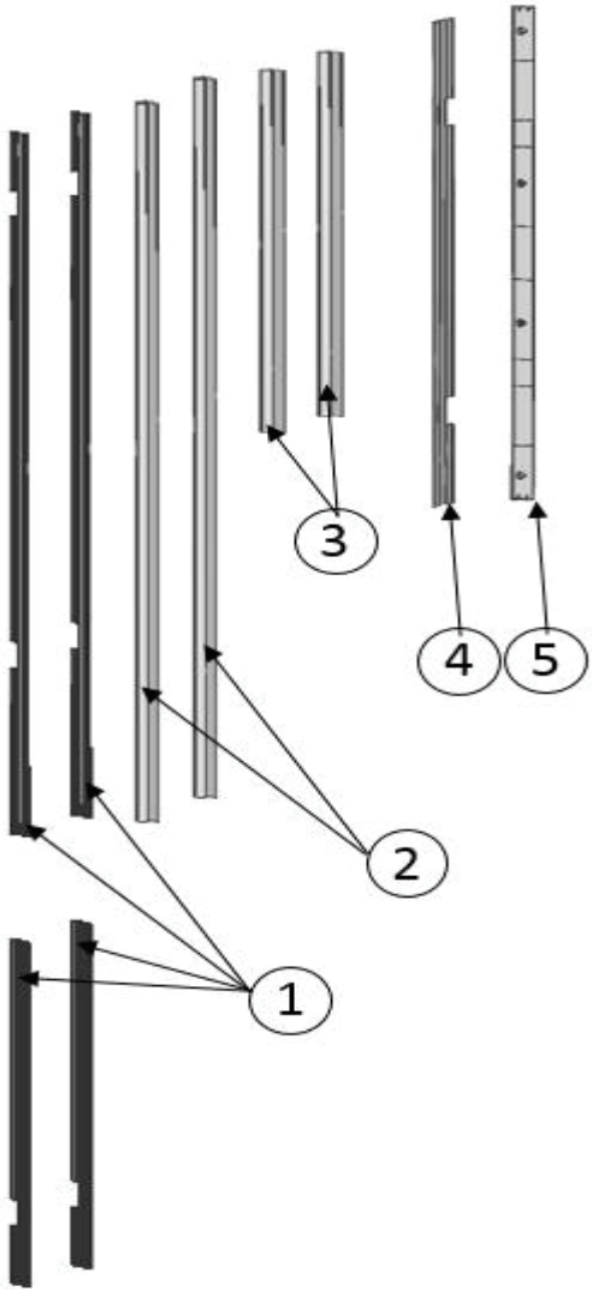

No	Part name	spec	76	91	92
1	Trim fridge furniture side	PVC extrusion L=617, L=1,259	4	4	4
2	Trim fridge door side	PVC extrusion L=1136	2	2	4
3	Trim freezer door side	PVC extrusion L=556	2	2	2
4	Trim furniture top	PVC extrusion L=762, L=914	1	1	1
5	Cover freezer door top	abs	1	1	1

Parts - Mounting Hardware (Stored in Freezer)

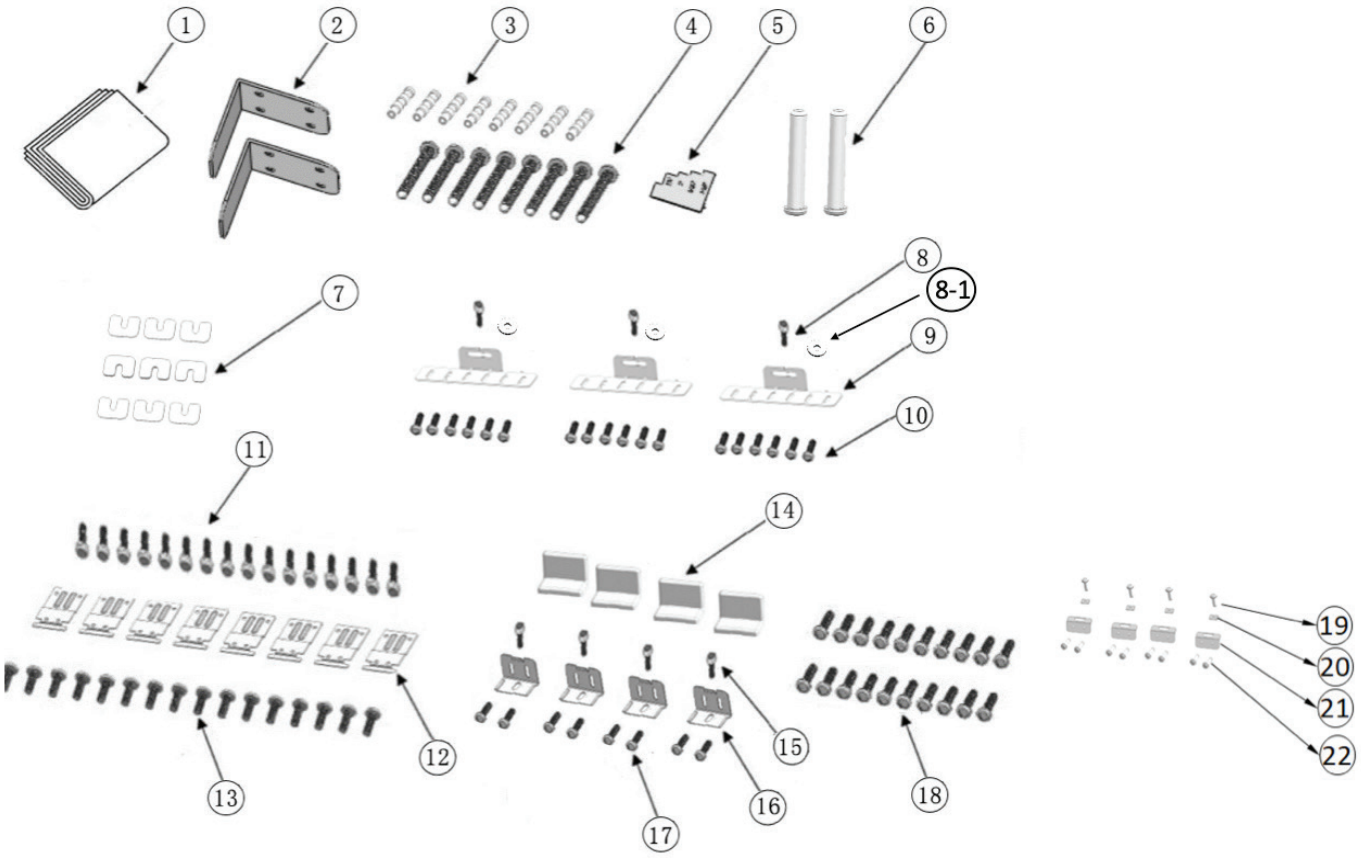

Parts - Mounting Hardware (Quantities)

Category	TRF-76BINFIA	TRF-91BINFIA	TRF-92BINFIA
Abbreviation.	76	91	92

No	Part name	spec	76	91	92
1	Furniture door preparation template	plastic	1	1	2
2	Anti tip bracket	T4.0, Zn-coating	2	2	2
3	Dowel	-	8	8	8
4	Anti tip bracket screws	M8*L60	8	8	8
5	Position adjustment jig	PS	1	1	1
6	90° limiting pins	sus	1	1	2
7	Freezer furniture door adjustment washer	abs	9	9	9
8	Screw freezer door hanger bracket	ST5*16, Crossed flat head tapping screws	3	3	3
8-1	Shim	M5*12*1.2	3	3	3
9	Freezer door hanger bracket	T1.0, Cr+zn-coating	3	3	3
10	Screw freezer furniture door hanger bracket	ST4x14, counter sunk head screw	18	18	18
11	Screw cabinet connecting bracket	M4*12, Crossed flat head tapping screws	16	16	16
12	Cabinet- cabin connecting bracket	T1.0, Zn-coating	8	8	8
13	Screw cabin connecting bracket	ST4x14, counter sunk head screw	16	16	16
14	Cover furniture door bracket	abs	4	4	2
15	Screw door fixing bracket	M4*12, Crossed flat head tapping screws	4	4	2
16	Door- door furniture connecting bracket	T1.0, Cr+zn-coating	4	4	2
17	Screw furniture door fixing bracket	ST4x14, counter sunk head screw	8	8	4
18	Screw furniture door hanger bracket	ST4x14, counter sunk head screw	20	20	24
19	Screws	M4*12, Crossed flat head tapping screws	0	0	4
20	Washer	T1.0, Zn-coating	0	0	4
21	Fixing iron	T1.0, Zn-coating	0	0	4
22	Screws	ST4x14	0	0	8



- Anti tip bracket screw
- dowels



Crossed flat head tapping screws
Spec : M4x12
Fixing Refrigerator
Such as cabinet and door
(press part)



- Counter sunk head screw
  Spec : ST4x14
  Fixing the cabin and
  furniture door
  (wood part)



Crossed flat head tapping screws
Spec : ST 5x16
Fixing freezer door top part
and furniture door
(press part)

Removing the Freezer Crisper

Remove the 4 knurled screws manually (see diagram below):

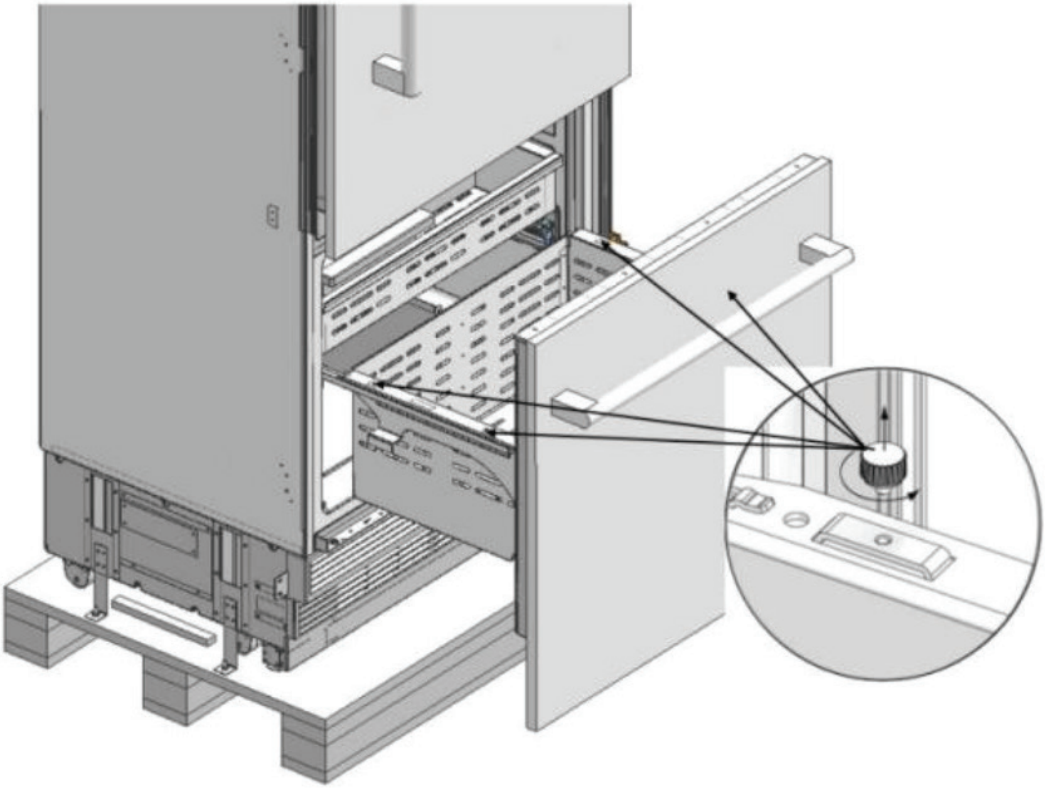

With the knurled screws taken out, the lower crisper can now be removed as shown:

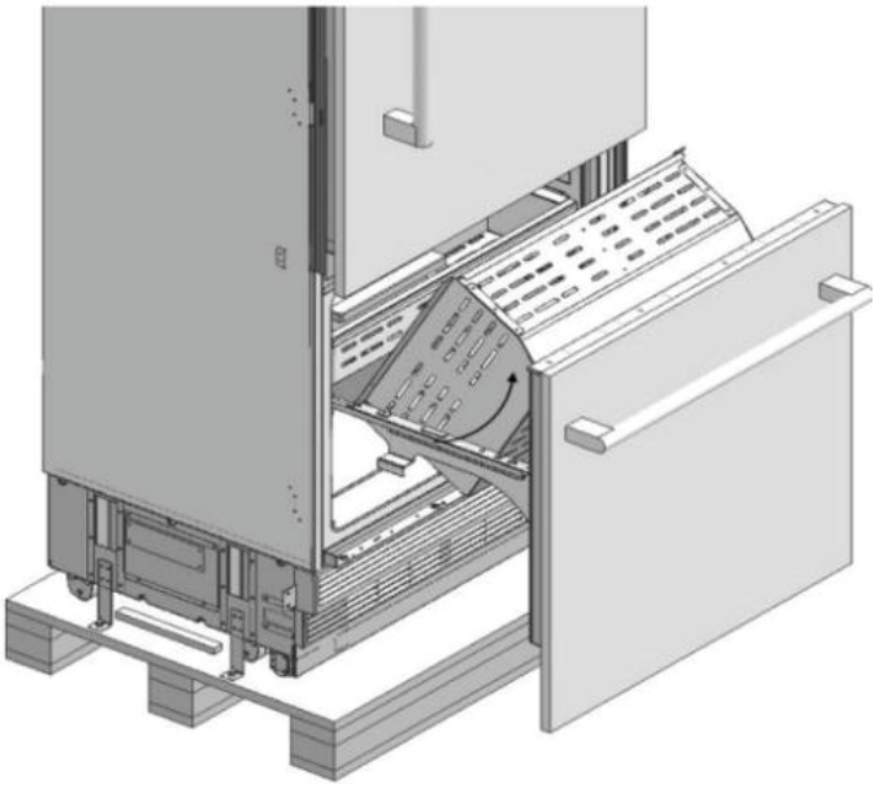

Removing the Freezer Door

Remove 2 screws which are near the front section and connect the freezer door and the rail (first diagram). Next, pull the door frontward to free it from the tabs at the back and remove it (second diagram at bottom of this page).



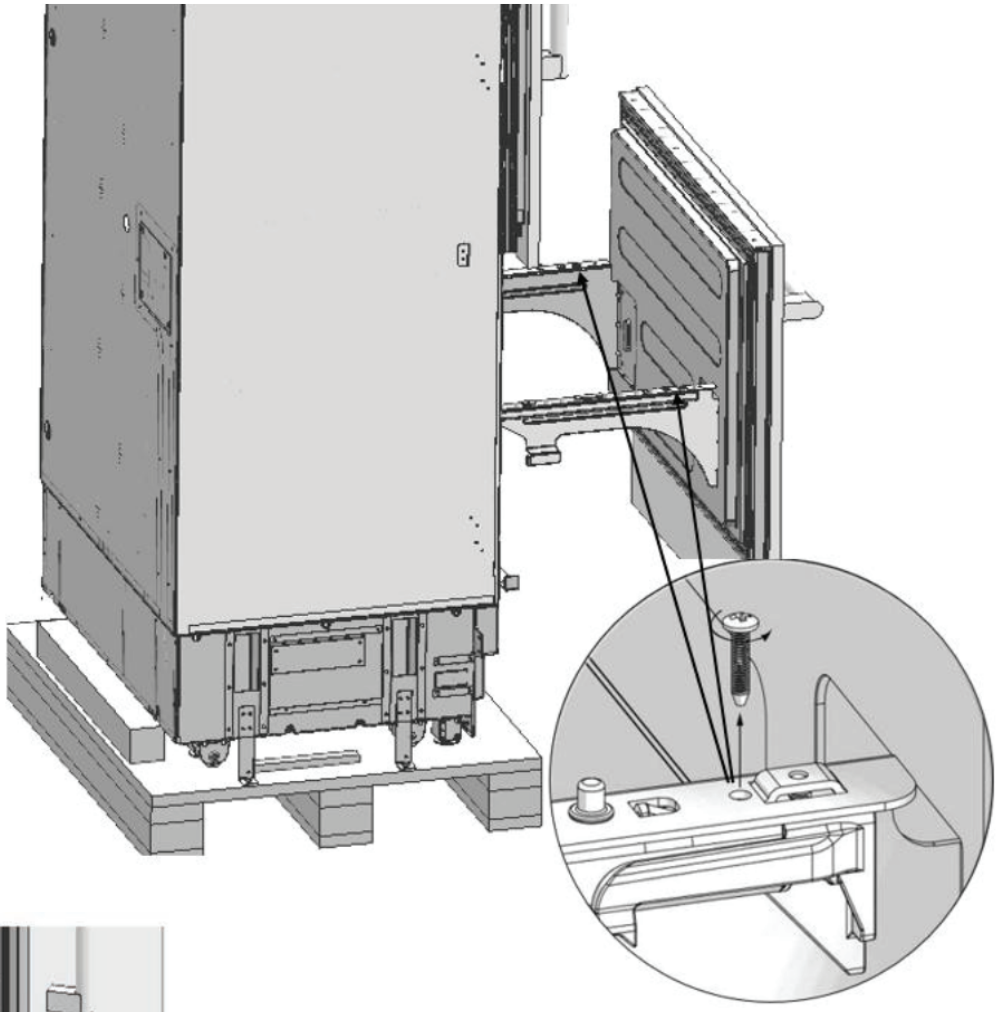

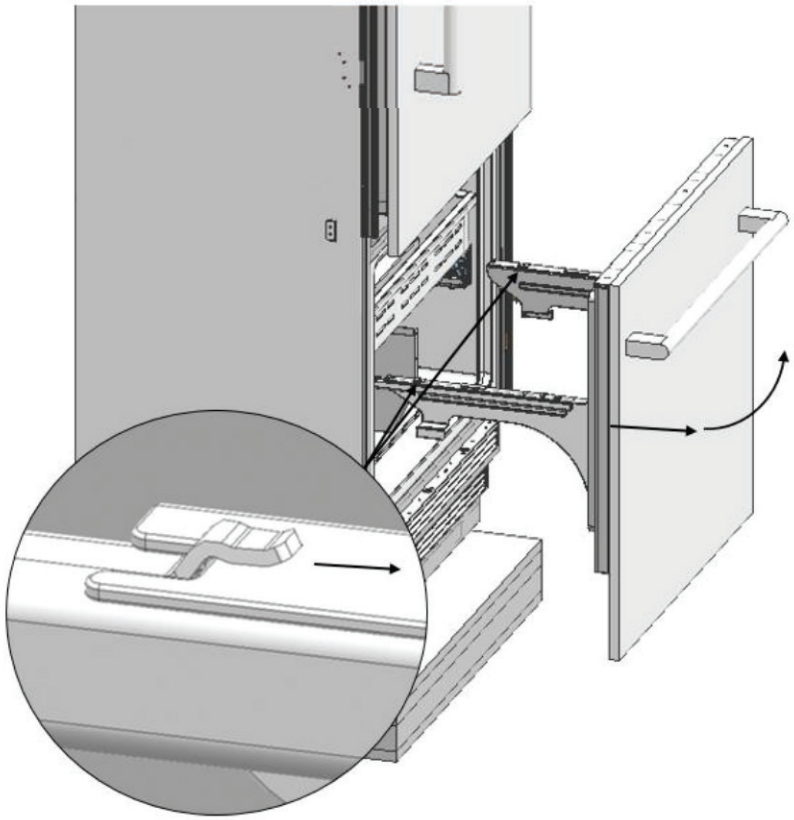

Remove the Venting Assembly

Remove the 2 screws to take out the **Lower Vent Hole Assembly**.



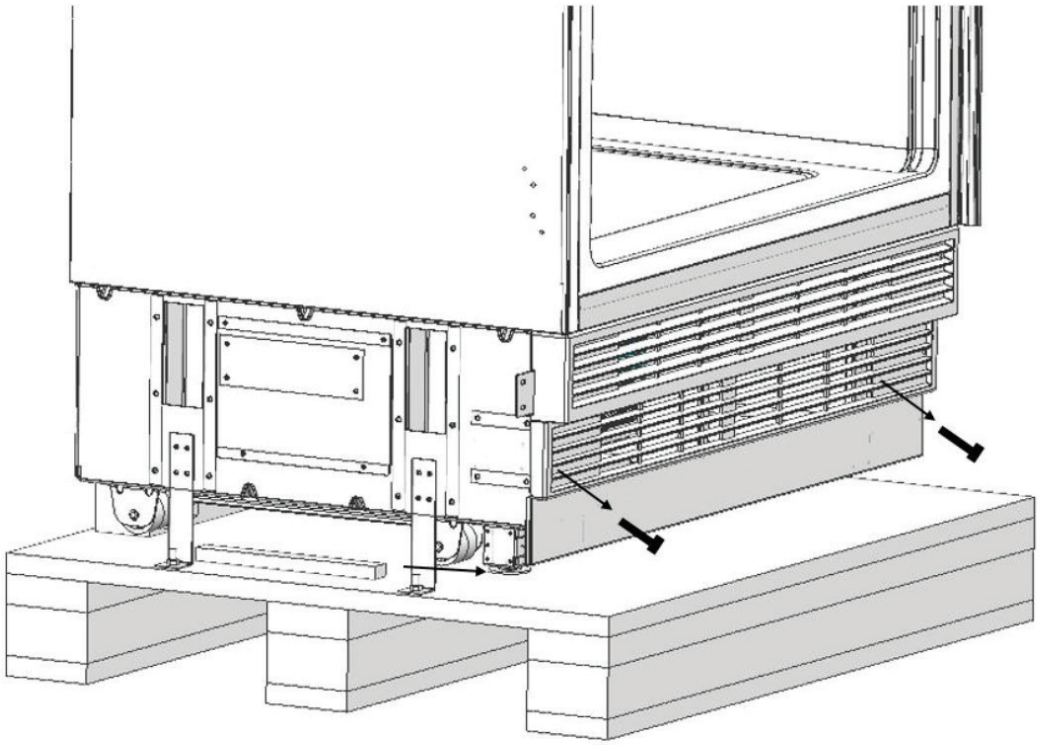

Remove the 2 screws to take out the **Upper Vent Hole Part**.

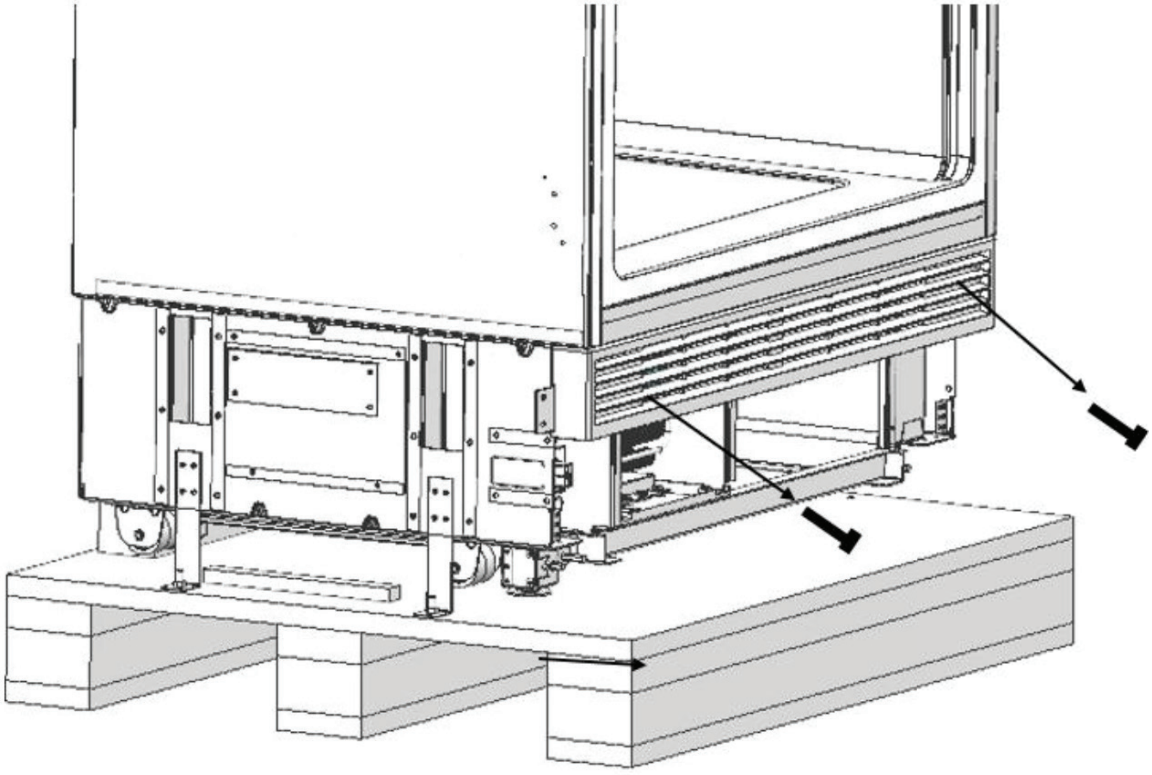

Anti-Tip Bracket Mounting

Warning
You must definitely use Anti-Tip Brackets to prevent the appliance from tipping over. Make sure that there is no electrical wires or water lines in the wall where the screws will be tightened and connections will be established.

Mark the wall for Anti-Tip Brackets, referencing the diagram below, according to the refrigerator you're installing.



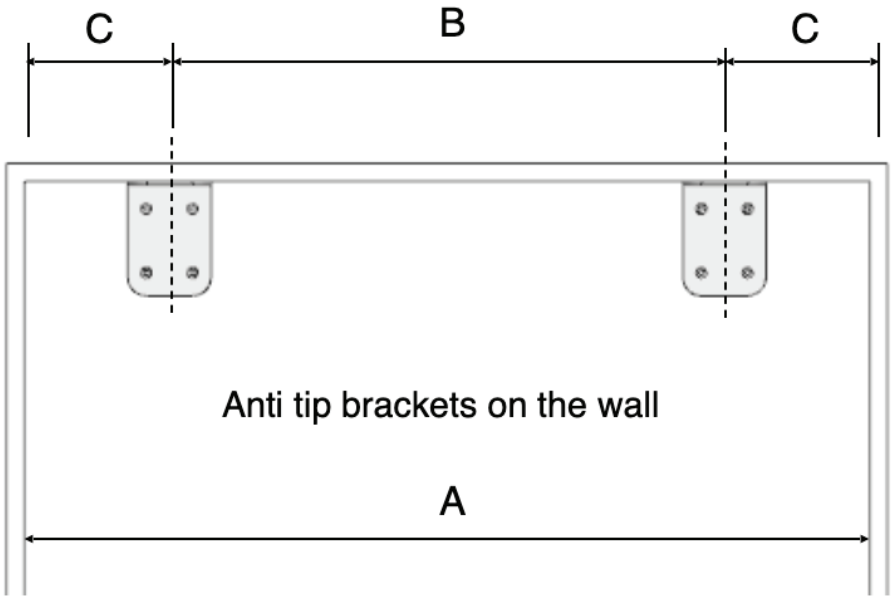

Category	30in Built In	36in Built In
A	30" (762mm)	36" (914mm)
B	23 5/8" (600mm)	23 5/8" (600mm)
C	3 3/16" (81mm)	6 3/16" (157mm)

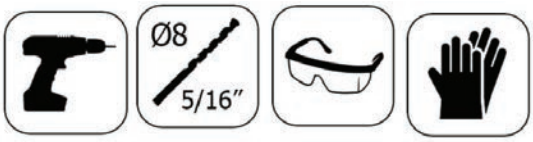

Use a drill to create holes for dowels (item No.3) at the marked points. (5/16" -Ø8)

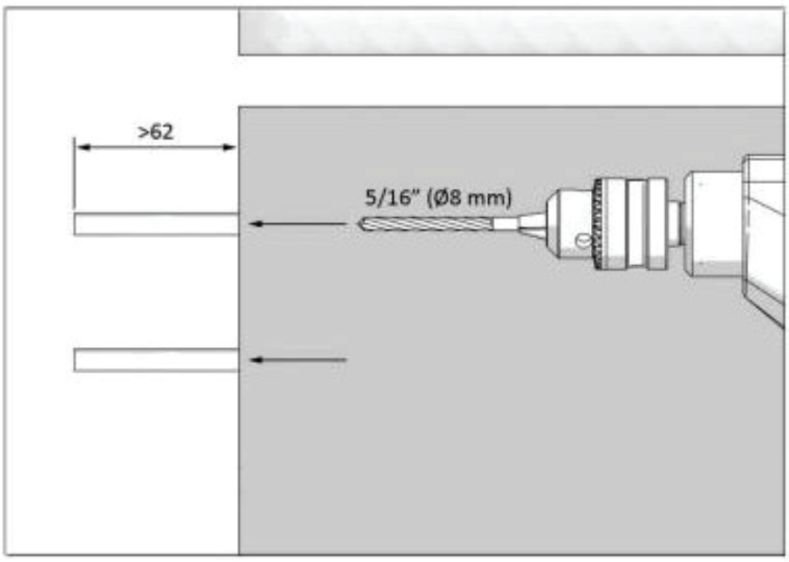

Anti-Tip Bracket Mounting

Use a hammer or mallot to fit the dowels (item No.3).





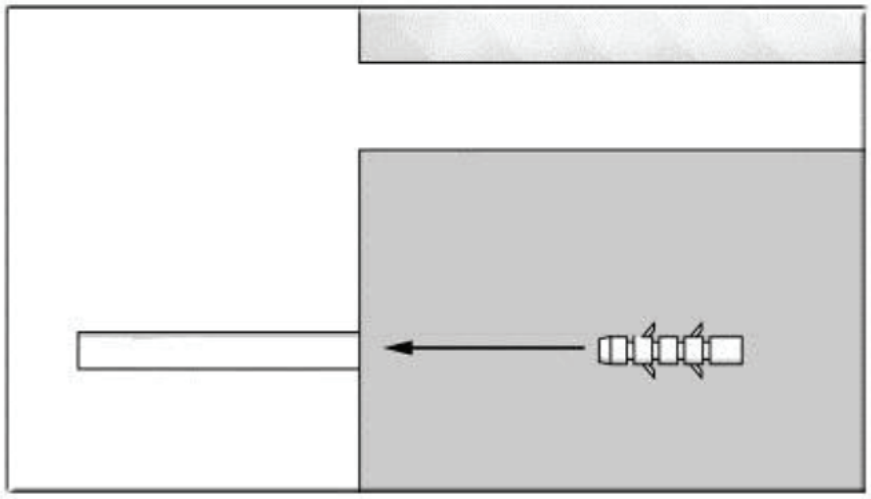

Fit the anti tip brackets (item No.2) into their places, using 4 screws(item No.4) for each. You must use both brackets to ensure safety protocols are followed.

Alternate Anti-Tip Method:
If the anti-tip brackets cannot be connected securely, you must use the alternative method below. In this method, you can use wooden girders to avoid the risk of tipping over. It must be installed as illustrated in the figure at the bottom of this page.

There must be no clearance between the product and the wooden girder. Minimum section dimensions of the wooden girder must be 3"x4" (75 mm x 100 mm). Width of the girder must be equal to the clearance where it will be installed. An additional girder must be used if the niche depth is more than anticipated. The wooden girder must contact the product with a maximum size of 2" (50.8 mm).

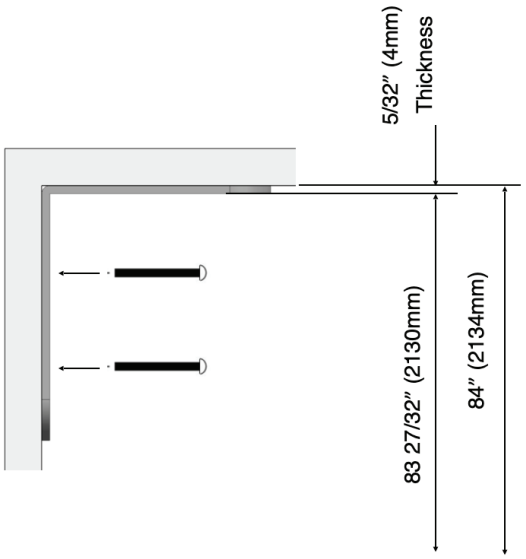

To determine the location for the wooden girder, mark it on the rear wall, select suitable screws and connect safely.

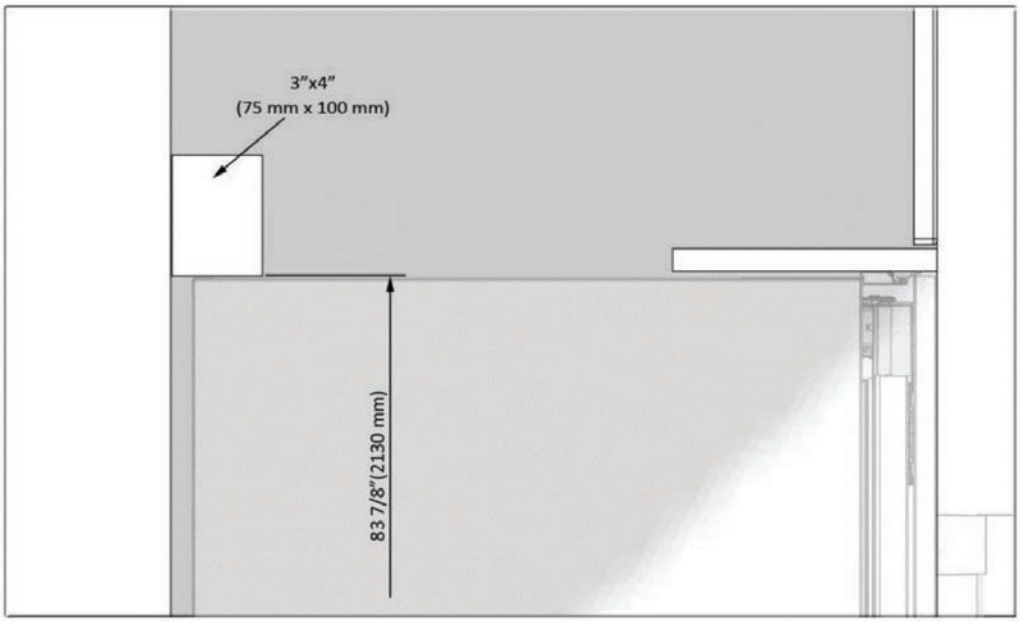

Prepping the Water Line and Power Plug

You will need a hose with a minimum length of 60" (1.5 meters) and a diameter of ¼" for water connections of the product during installation. A connector that has a thread with an external diameter of ¼ must be used to connect the hose end to the product. You can choose the method A or method B below to prevent the cable from getting jammed.

Method A: Locate the water hose and power supply on the back

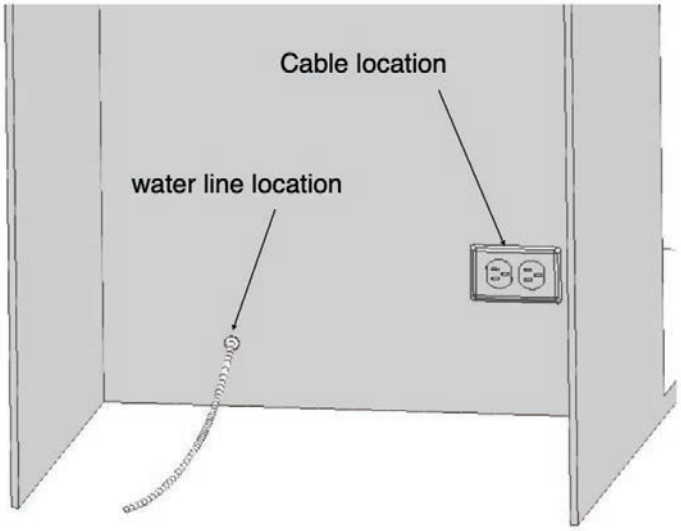

Method B: Locate the water hose and power supply on the side

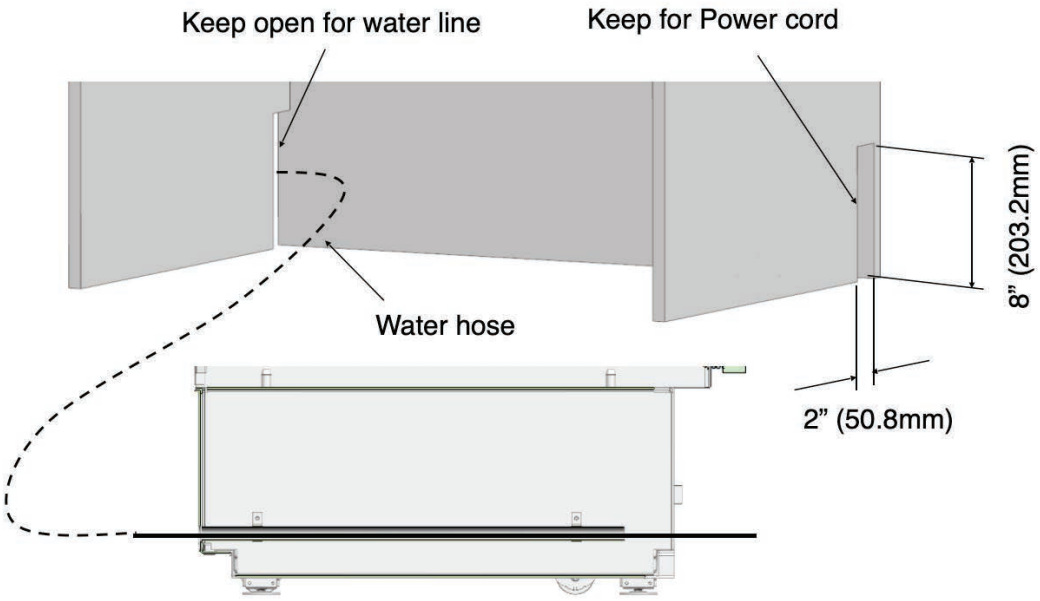

Installation

Remove the brackets that connect the refrigerator to the Wooden Pallet and be VERY careful to ensure the unti doesn't tip over, once released from the pallet. The fridge is tall and can tend to be top heavy.

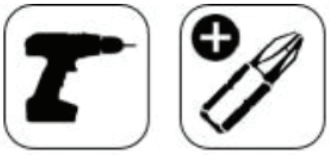

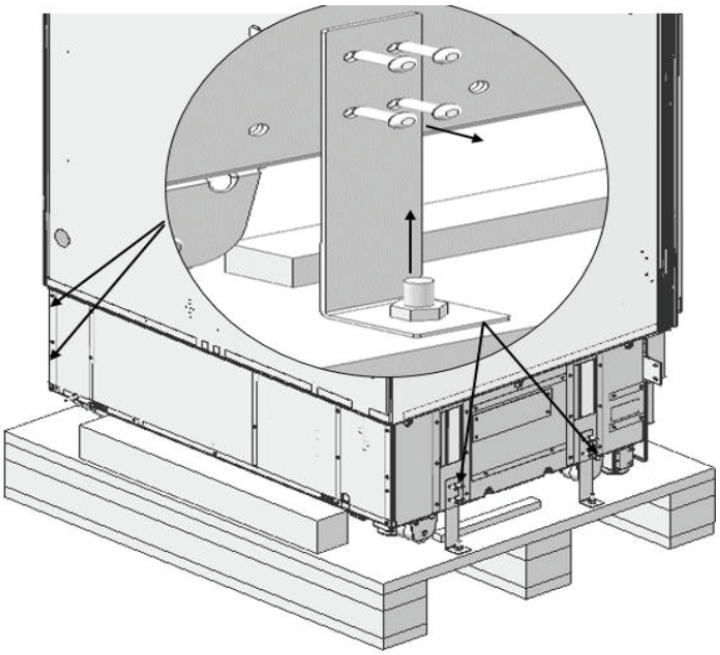

With two people, recline the refrigerator slowly and pull back with the help of a furniture dolly or cart.

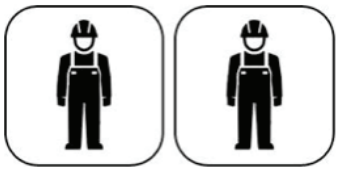

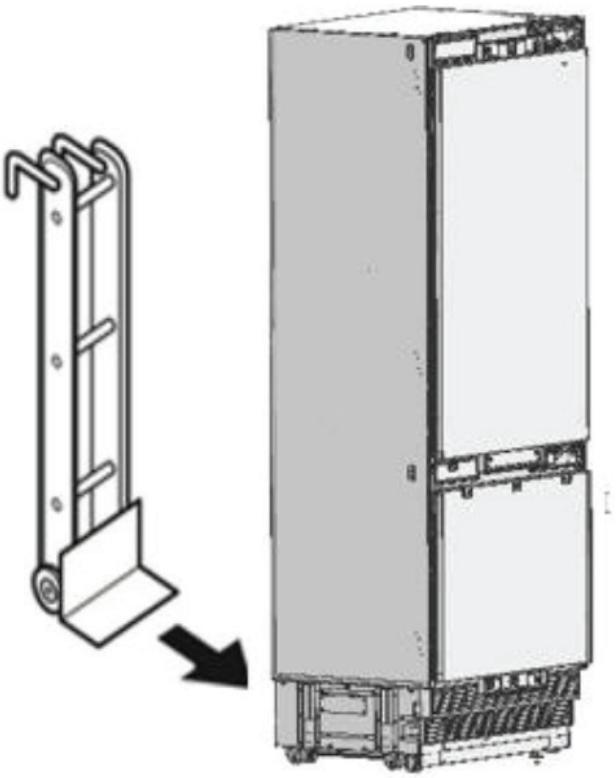

Placing the Fridge into the Cabin

Insert the mains water hose into the duct at the back and take it out from the front.

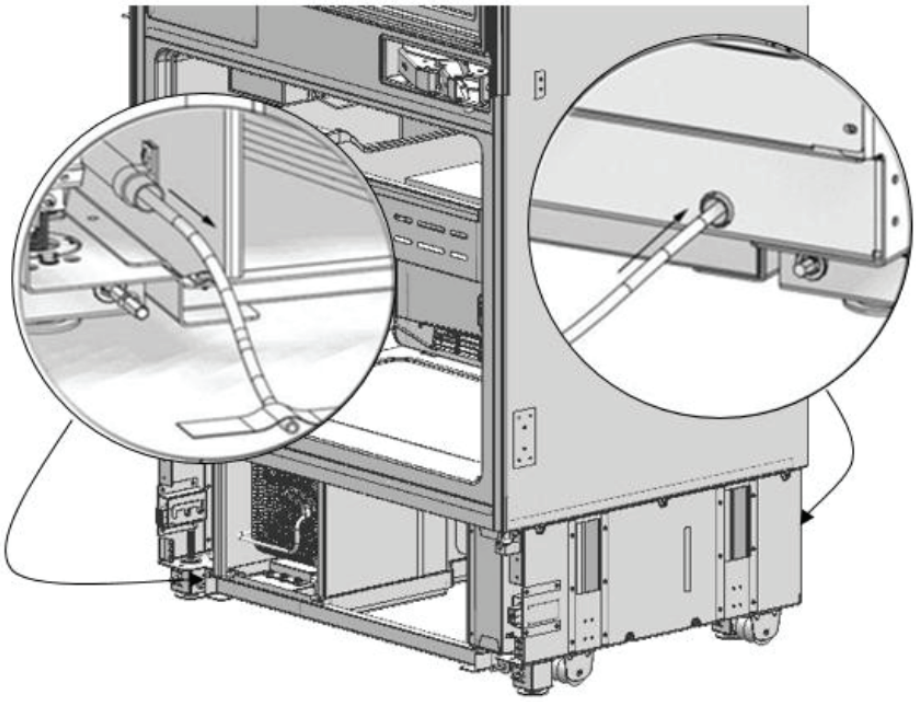

Apply the below method to prevent the cable from getting jammed when placing the fridge into the cabin. Use a string, tied to the power cord (near center) and hold it tight to lift the power cord as the unit is rolled back into place. This will keep the power cord from getting caught under the wheels.

The plug of the product must be accessible after installation. If the plug is not accessible after installation, the power must be cut off from the main switch.

Make sure that the mains cable is not jammed when placing the product.

Push the product carefully towards the cabin to place it. If there is strain during the placement of the product into the cabin:
The floor might be rough or uneven
Adjustable feet might be loose
(please see the relevant section to learn how to adjust the adjustable feet)
You must attach the Freezer Door temporarily to align the product before placing it.
You must use the upper edges of the Freezer Door when aligning the product with the furniture.
Adjustment of other edges are explained in the following pages.

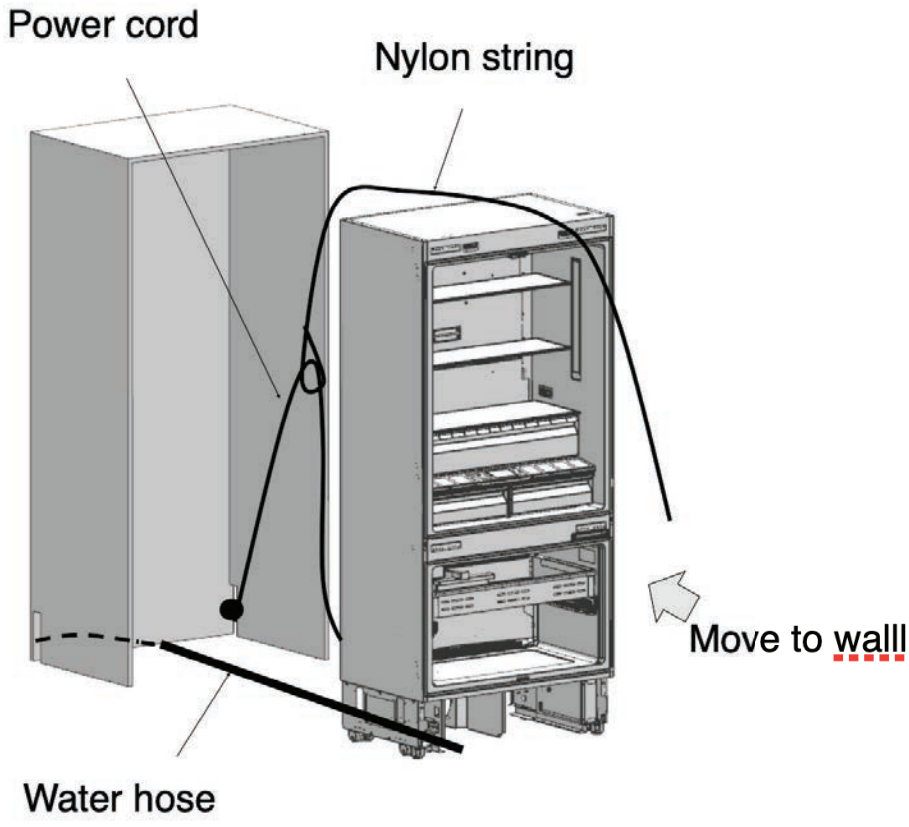

Adjusting Height of the Refrigerator

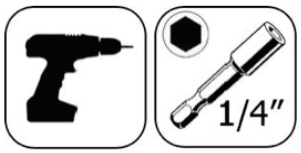

Adjust the refrigerator height using the four adjustable feet (see diagram below). The first step is to raise the front feet to reduce the risk of the cabin falling frontward.

A/D –Turn the key clockwise to lift the front

B/C –Turn the key clockwise to lift the rear

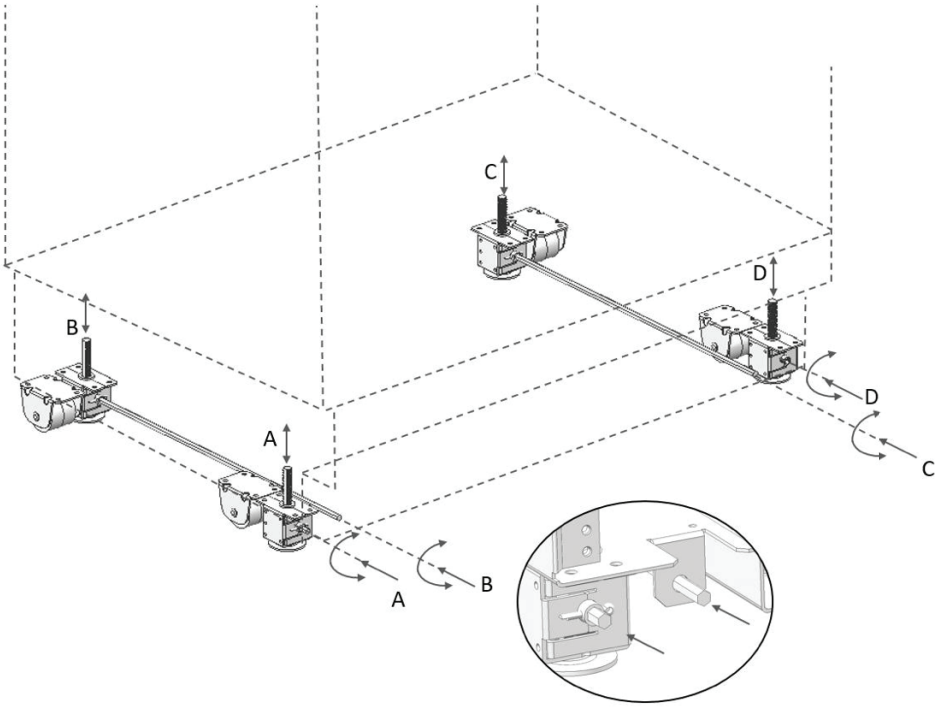

After adjusting the adjustable feet, check the flatness in both width and depth directions. The maximum height that the adjustable feet can reach is 1 9/16" (40 mm) and the product height is 85 3/8" (2,169 mm).

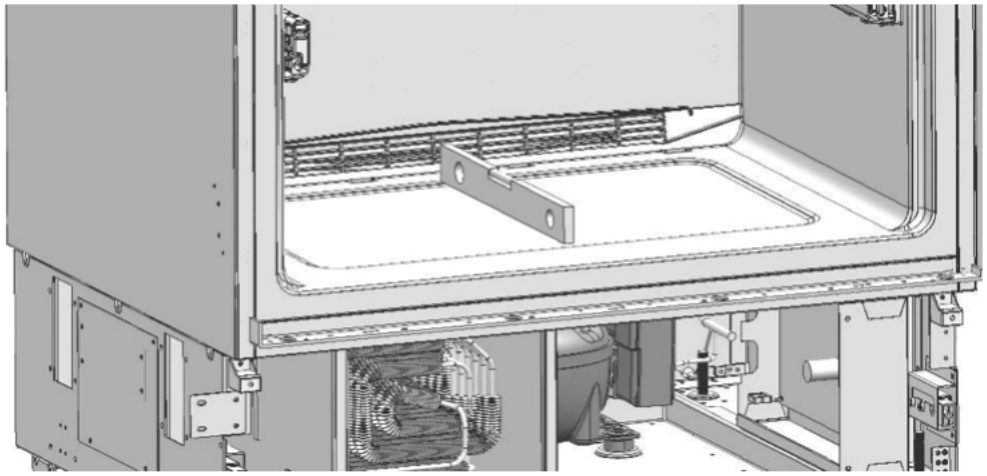

Adjusting the Fridge Based on Cabin Flange

For products with clad doors, the position of the Refrigerator is adjusted so that the door and the furniture surface are flush. You can also use position adjustment jig (Item No5) if necessary.

For products without furniture doors, the product is placed using the Adjustment part (Item No5) as shown in the figure below.

It is very important to align the upper edge of the Freezer door when aligning. All the other edges can be adjusted with the adjustment mechanisms.

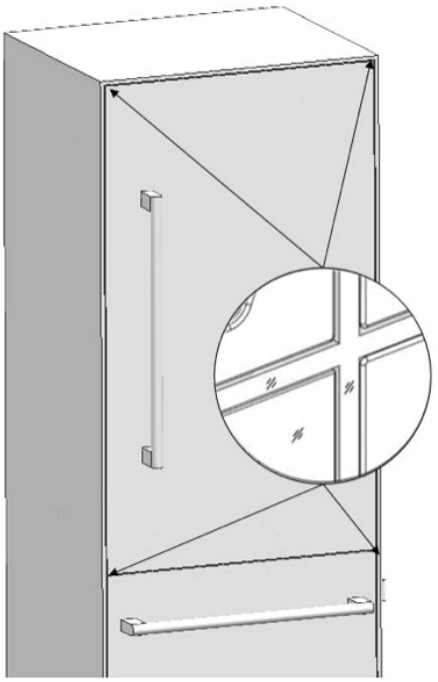

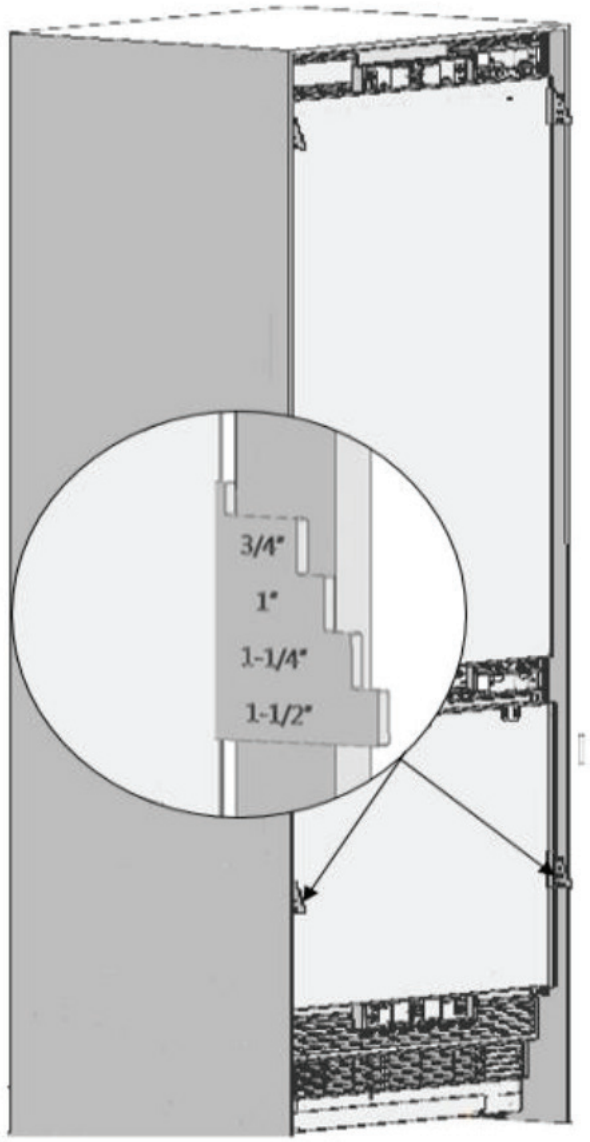

The position adjustment jig (Item No5) must be adjusted according to the thickness of the door. It can adjust the level for 4 different door thickness levels.

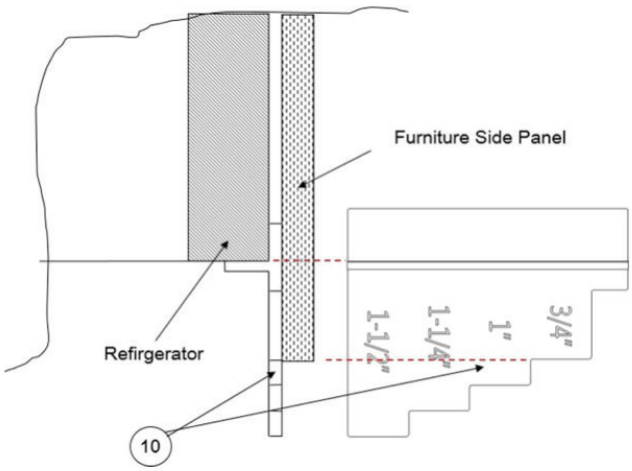

Cabinet-Cabin Connecting Bracket

Fix the cabinet-cabin connecting bracket (Item No12) to the cabinet, where 2 on the top, and 3 on every side. Use screw cabinet connecting bracket (Item No11) to tighten. **WARNING** Before starting to screw the Side and Upper brackets, please make sure that water is supplied to the product and there is no water leakage.

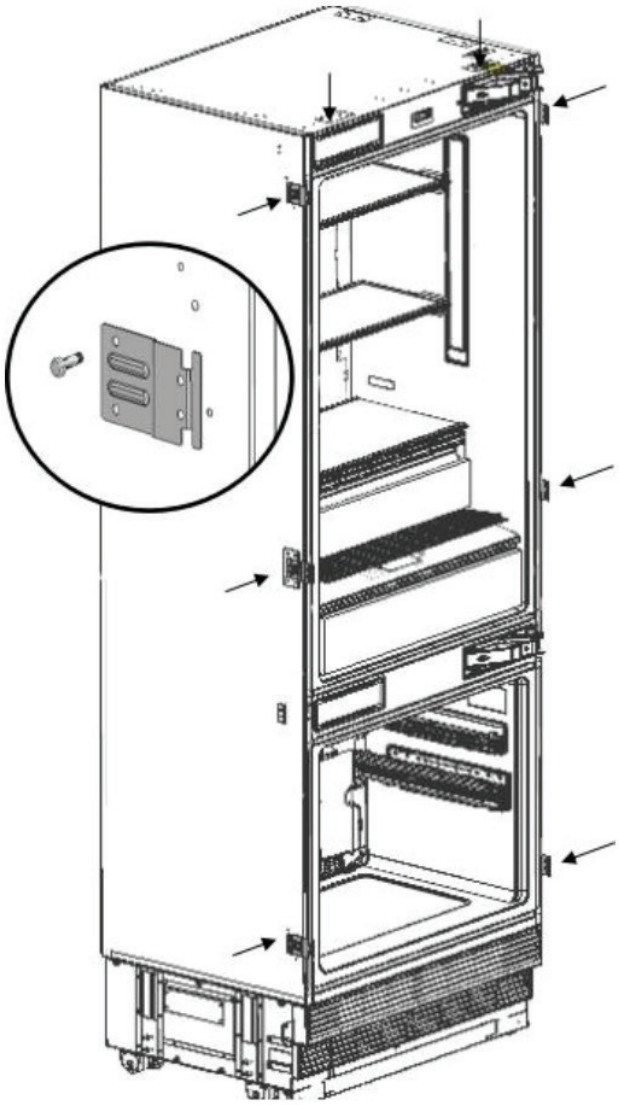



If you have difficulty tightening the screws, opening a reference hole with the drill will make this procedure easier. Attach cabinet-cabin connecting bracket(Item No12) to the cabin with 16 screws cabin connecting bracket (Item No13).

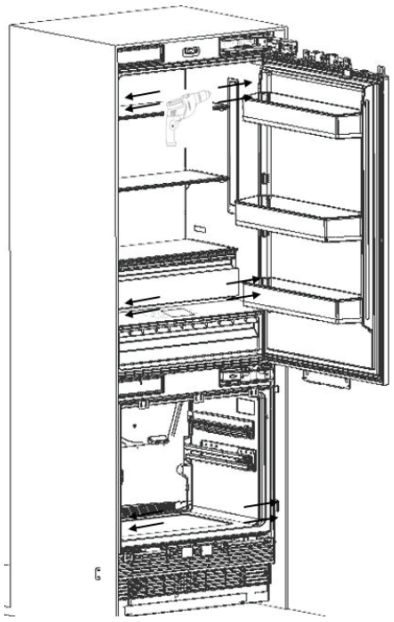

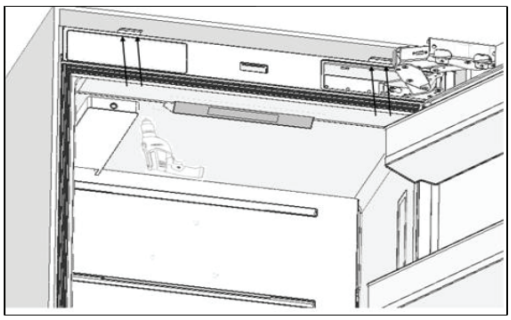

Installing the Cabin Bottom

Use the box cutter to cut the water hose from the end of the pipe it comes out, leaving a section of 10”. Use the 2 wrenches to firmly connect the hose coming from the mains and the hose coming from the valve.

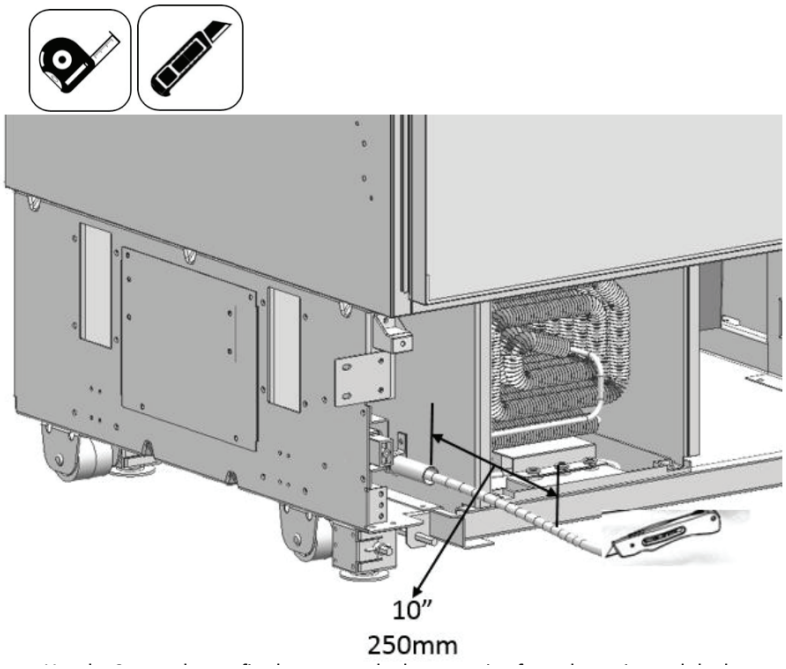

WARNING

The hose coming from the mains must be one piece. Do not use extension hoses. Make sure that the power is cut off when making the water connection of the product. The water valve must be off when connecting the water hose. It is recommended that the water on/off valve remains accessible after installing the product. This product is suitable for use with cold water mains only. Pressure of the water system must be between 25-80 psi (1.7-5.5 Bar). Once the connection is complete, you must turn on the mains valve and make sure that there is no leakage at that point.

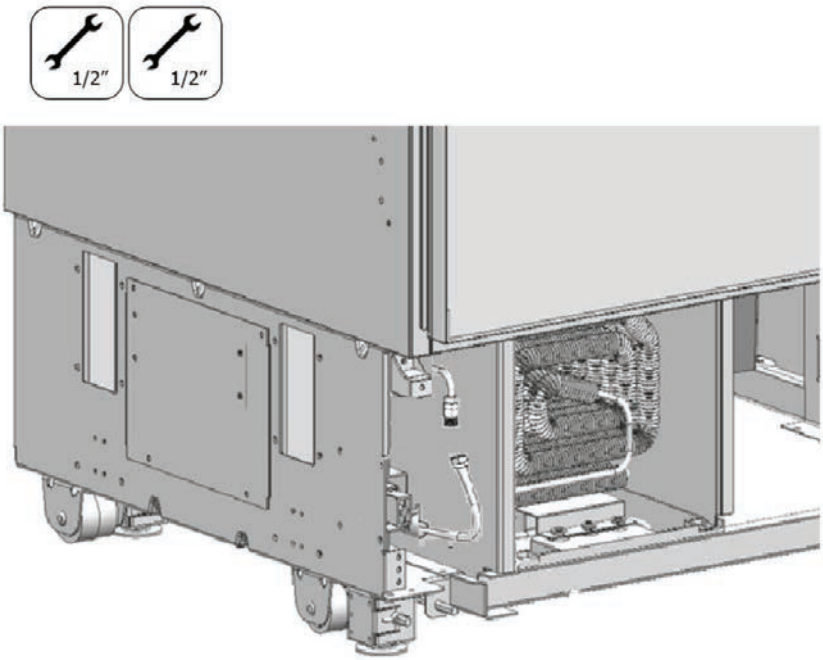

Attaching Vent Cover

Use 2 screws to attach the upper vent hole part.

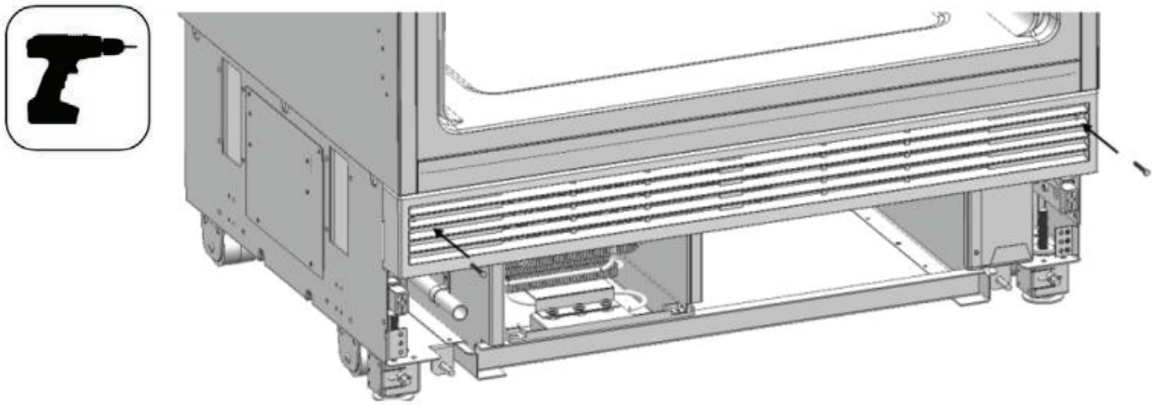

Use 2 screws to attach the lower vent hole part.

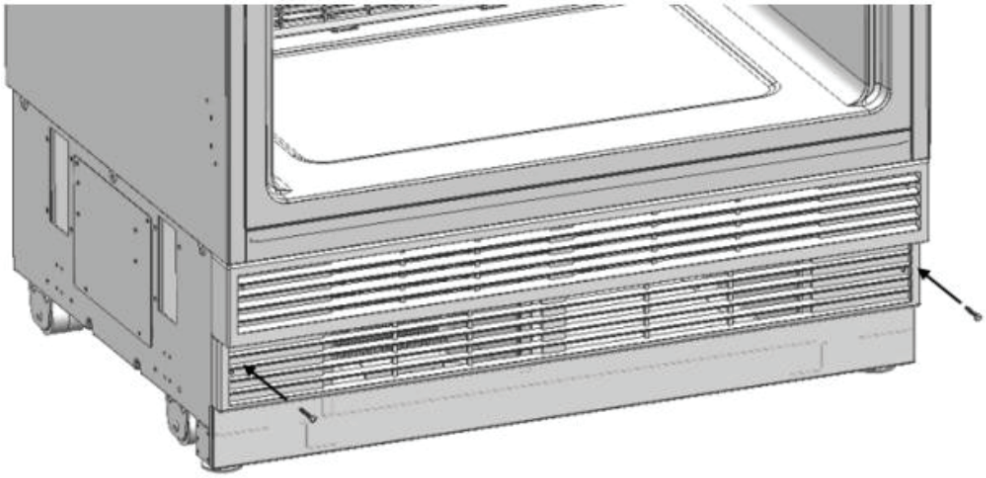

You can move the lower vent hole forward-backward to adjust it to the kick plate in the kitchen. Forward-backward travel distance of the lower kick plate must be 15/16” (23 mm). As you can see in the figure, the decorative kick plate must not be in front of the upper vent hole level.

Attaching Decorative Pieces

Attach the trim fridge furniture side (Item No1) onto cabinet-cabin connecting bracket (Item No12).

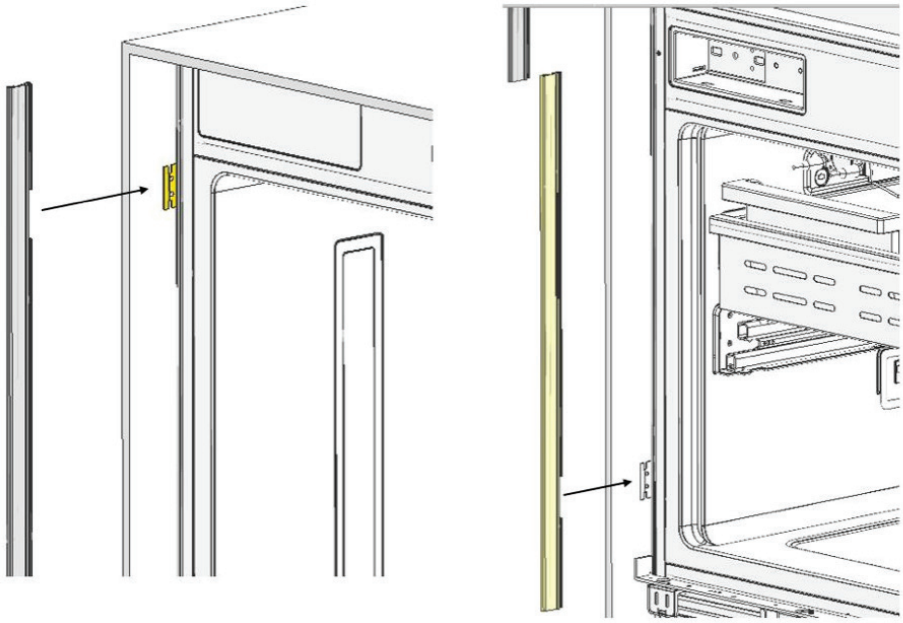

Attach the trim furniture top (Item No4) onto cabinet-cabin connecting bracket (Item No12).

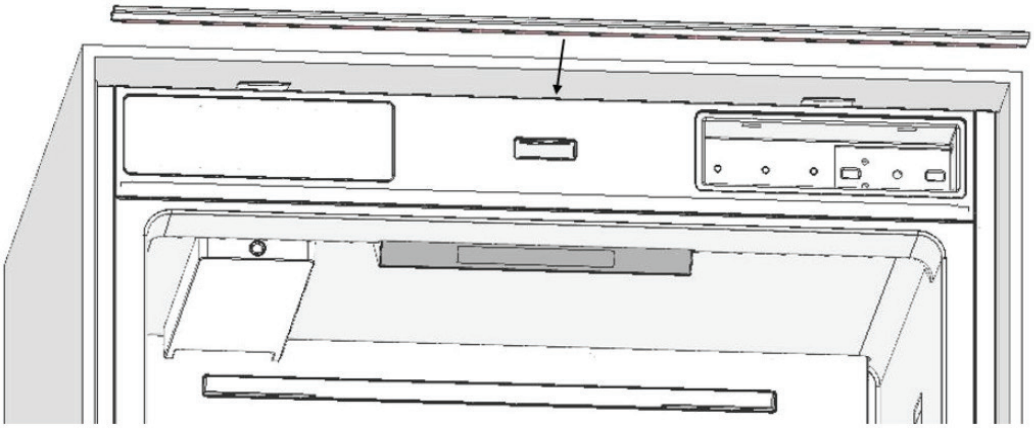

Panel Preparation

Maximum weights of the furniture (door panels) to be mounted to the product are as follows.

- Fridge Door: 35.7 lbs. (16.2 kg)
- Freezer Door: 19.8 lbs. (9 kg)

Choosing Doot Thickness:
The door of your refrigerator can open by 115° maximum. If the door is going to open to this degree, you can choose the following thickness levels. **NOTE:** If the door thickness is more than 1 ½" (38 mm), the door should not open more than 90°. You must use a limiting pin on the hinge.

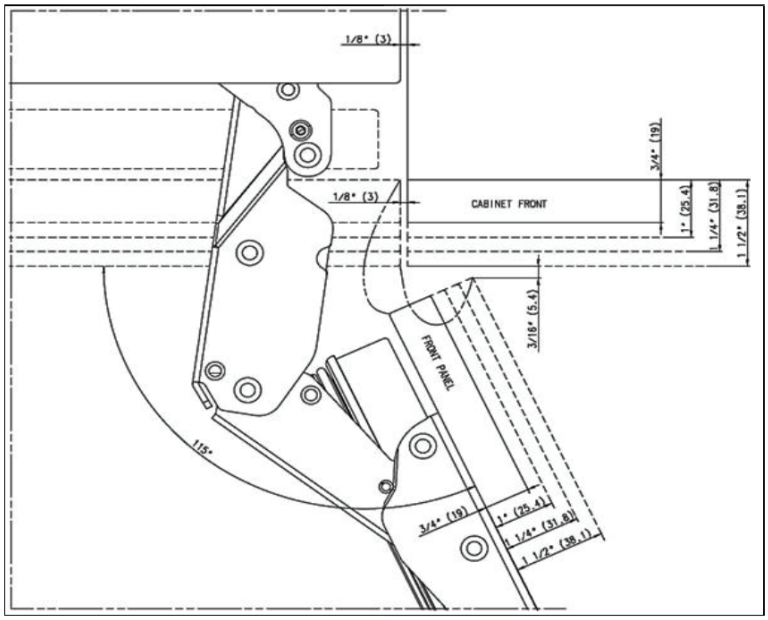

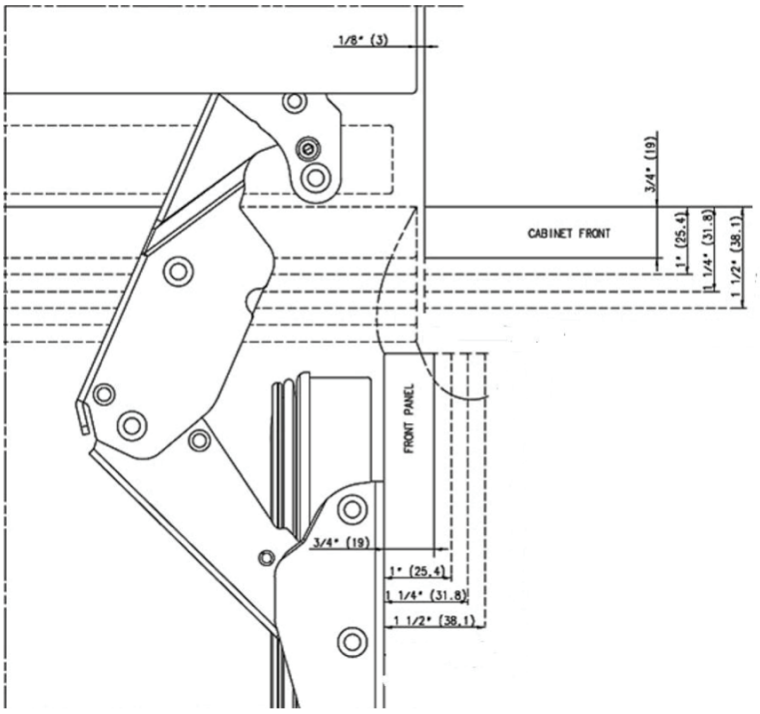

You can limit the opening degree of your door to 90° if you want. In this case, the door thickness levels can be like the following (you can look at the relevant section to learn how to attach the 90° limiting pin (Item No6).

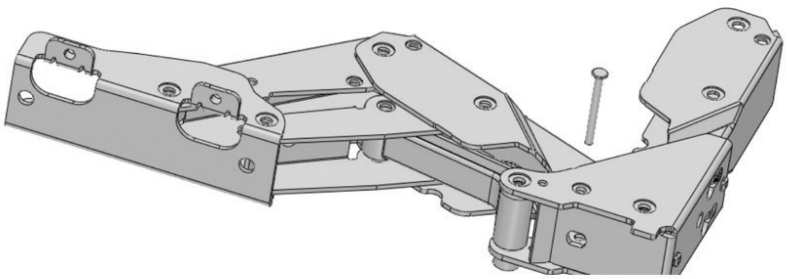

90°limit pin should be inserted to upper hinge and lower hinge

Removing Mech Covers

Remove screws to take out the cover door hanger bracket upper and fixing bracket.

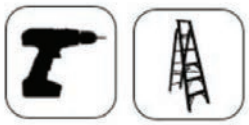

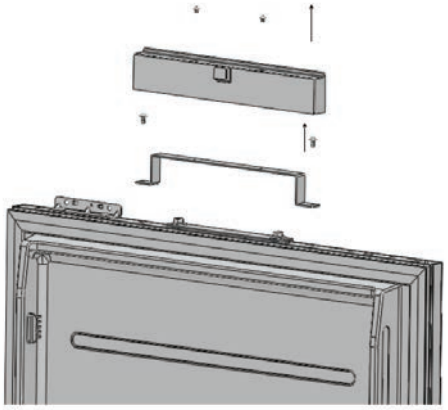

Remove two screws to take out the cover door hanger bracket low.

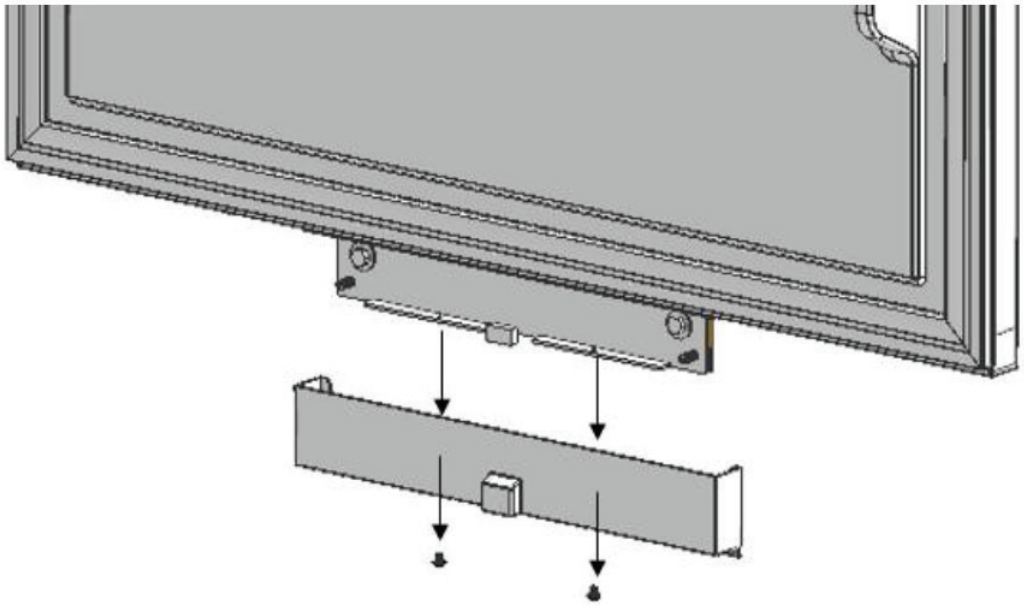

Removing the Panel-Adjustment Mechanisms

Remove the upper and lower Adjusting Mechanism assemblies from the door.

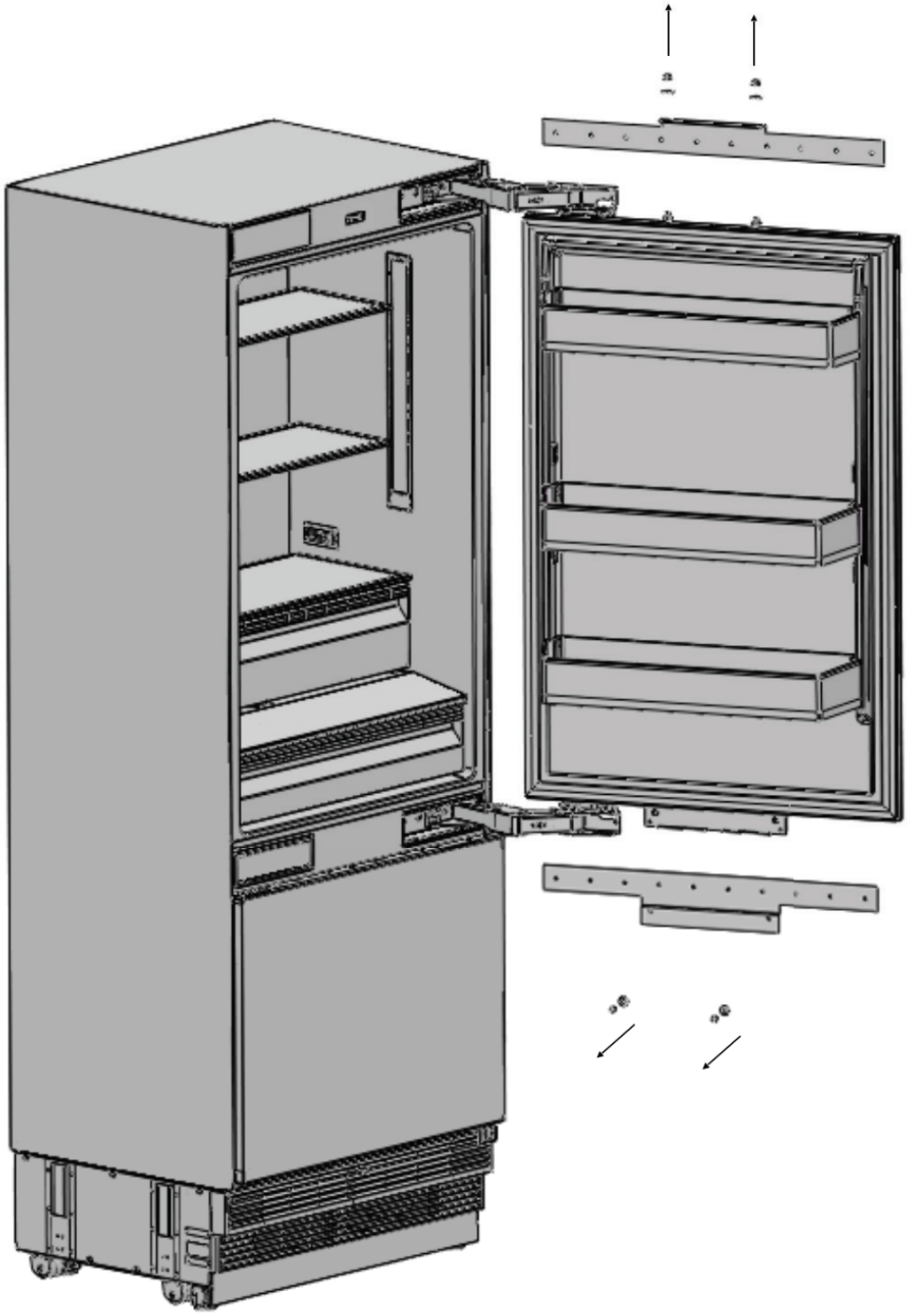

Preparing the Panel

You must take the dimensions into account when grouping the cradle parts on the furniture door. When marking, you can use the “Furniture door preparation template” (Item No 1) provided with the product.

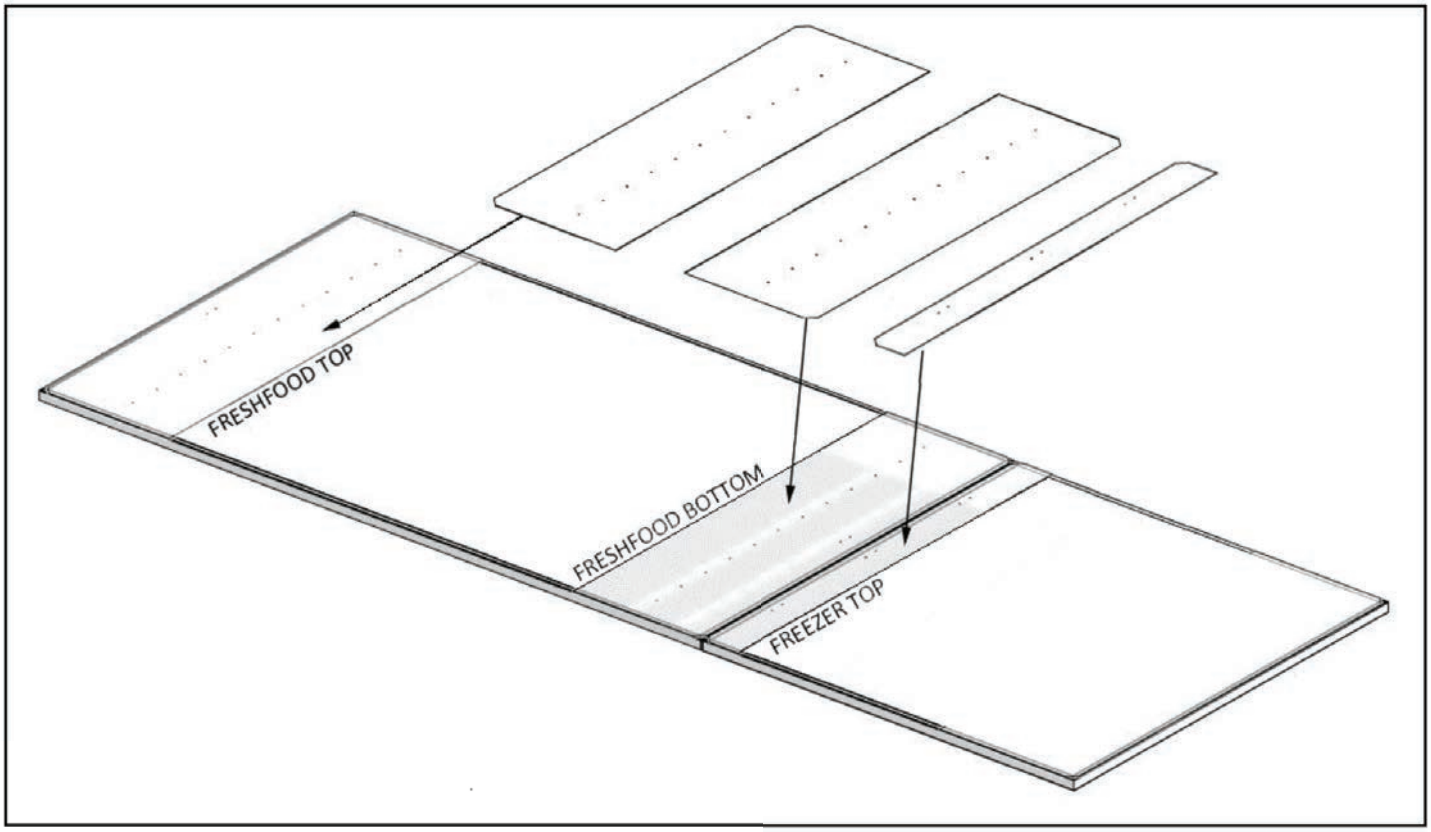

NOTE: Handle connection holes must be adjusted according to the handles to be used in kitchen design. Minimum thickness of the door must be 5/8” (16mm).

Preparing the Panel

You must take the dimensions into account when grouping the cradle parts on the furniture door. When marking, you can use the “Furniture door preparation template” (Item No 1) provided with the product.

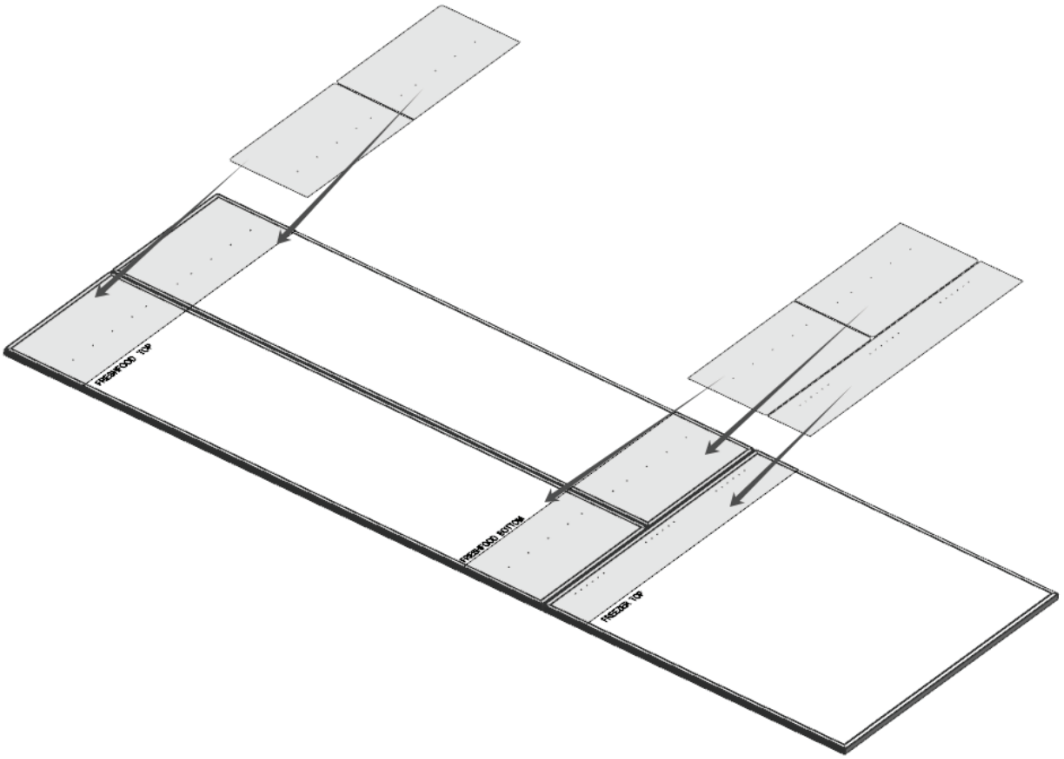

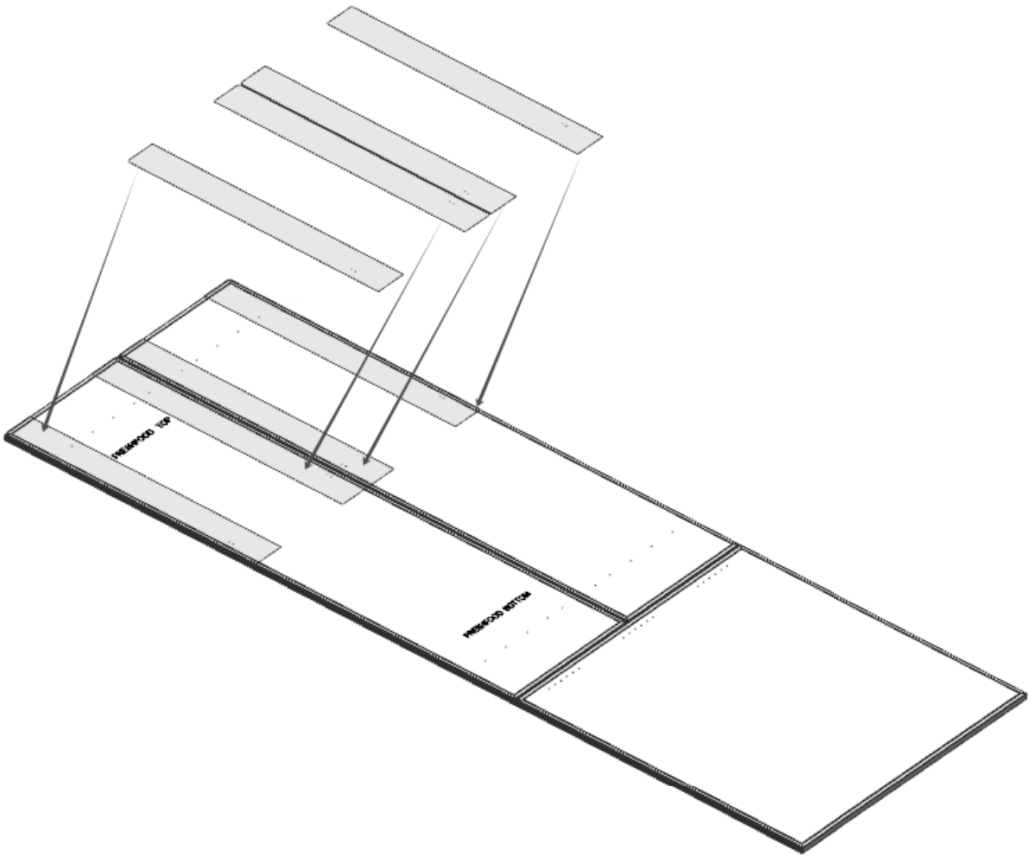

Refrigerator Panel Dimensions

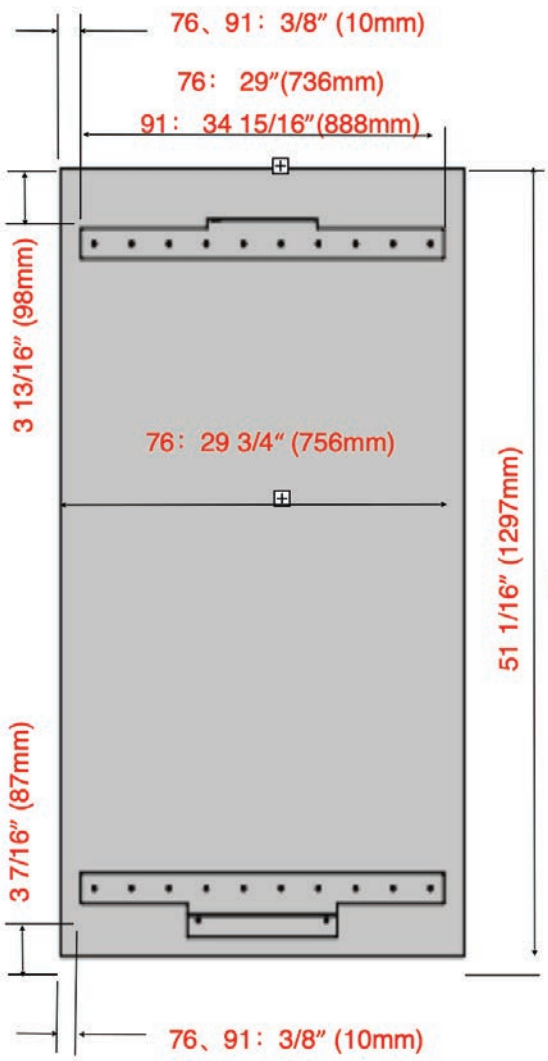

30" Built in Fridge

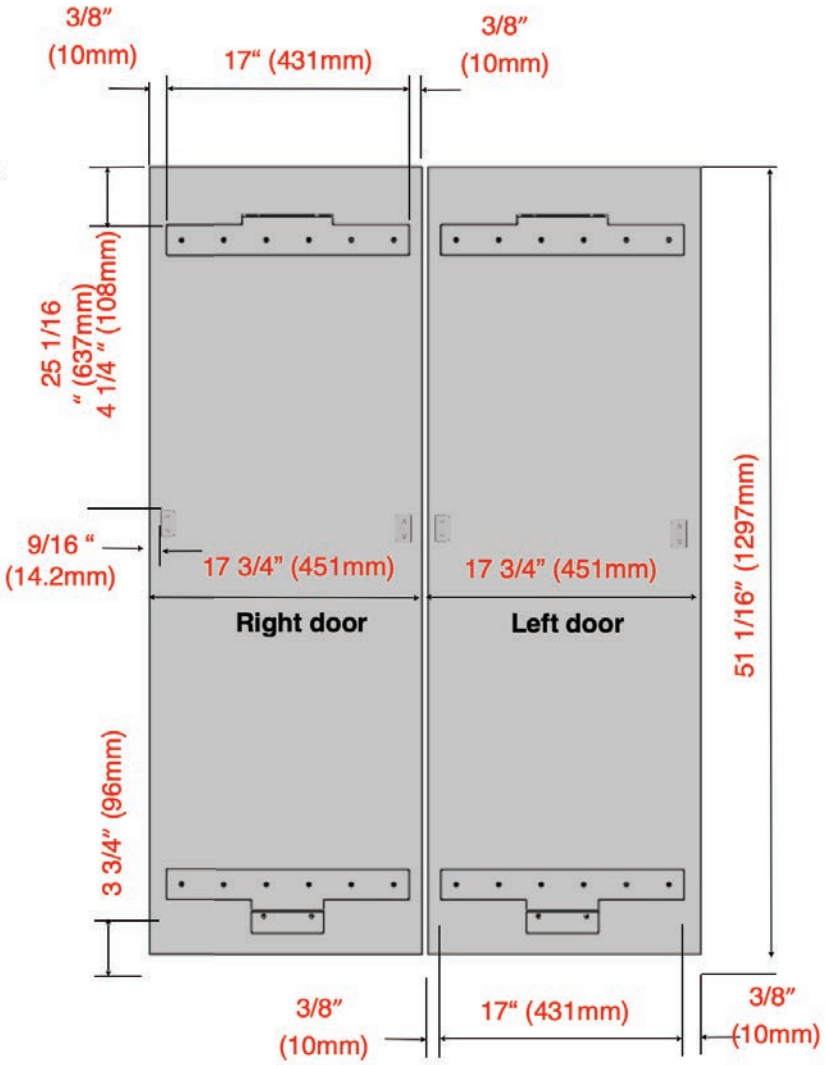

36" Built in Fridge

Install 2 hanger bracket using the screw furniture door hanger bracket (Item No18). You can also use the furniture door preparation template (Item No 1) provided with the product to align these parts. Using 4 Screws (Item No 22) total and 2 fixing iron (Item No 22) to secure on the side of TRF-92BINFIA fridge door panel.

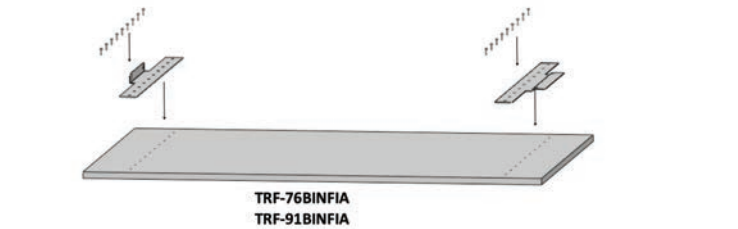

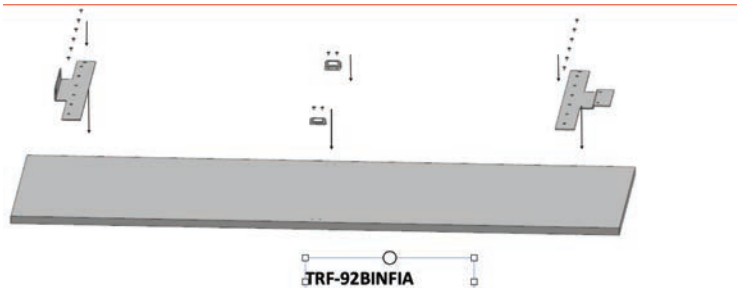

Attach the fridge door handle. Screws holding the door handle must not protrude.

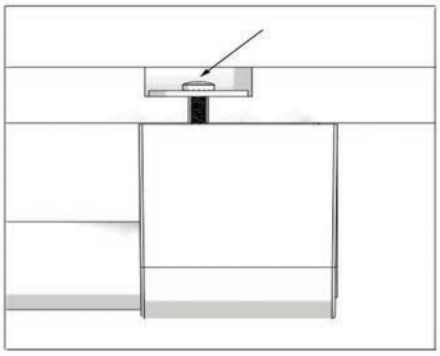

Freezer Panel Dimensions

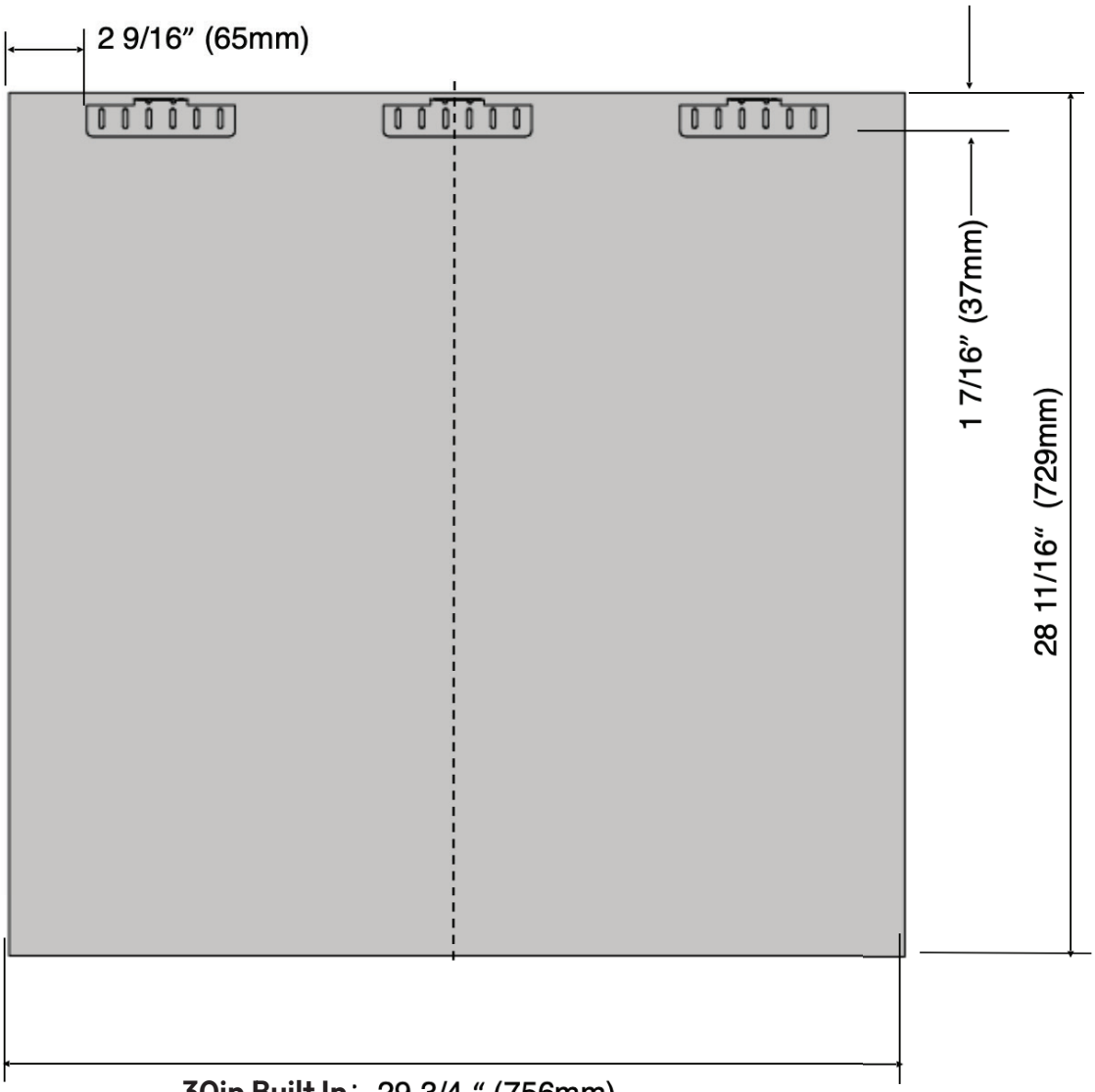

30in Built In: 29 3/4 " (756mm)

36in Built In : 35 3/4" (908mm)

Freezer Panel Dimensions

You must use screws suitable for the door thickness. Install hanger bracket using the screw furniture door hanger bracket (Item No18). You can also use the furniture door preparation template (Item No 1) provided with the product to align these parts. It is recommended to keep this template for future reference. Attach freezer door hanger brackets (Item No9) using 6 screws (Item No18) for each.

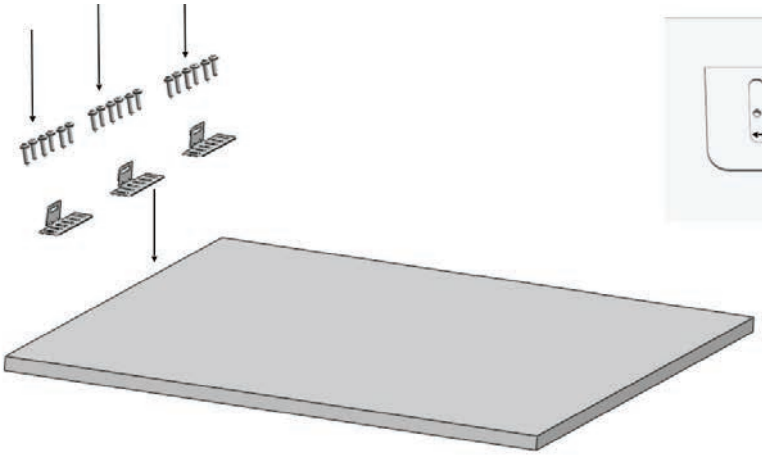

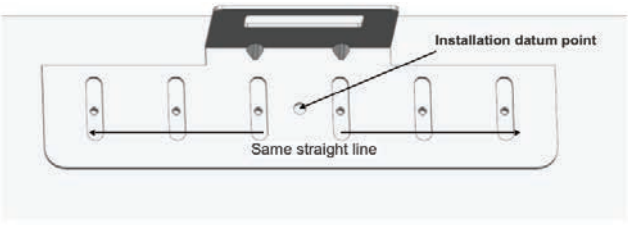

Attach the freezing door handle. Screws holding the door handle must not protrude.

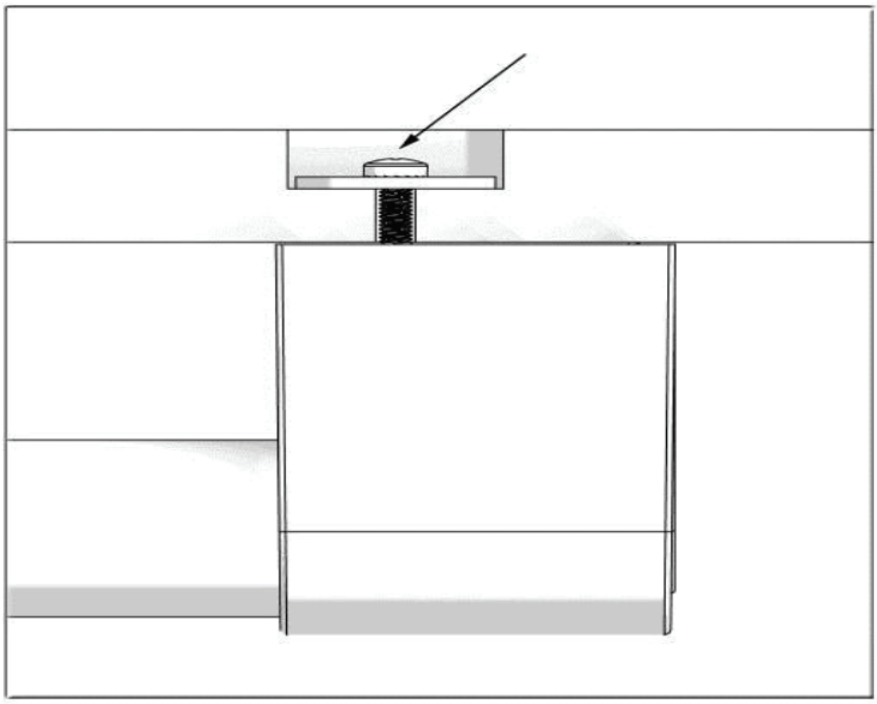

Installing the Panel Door

Attach the furniture door to the fridge door.

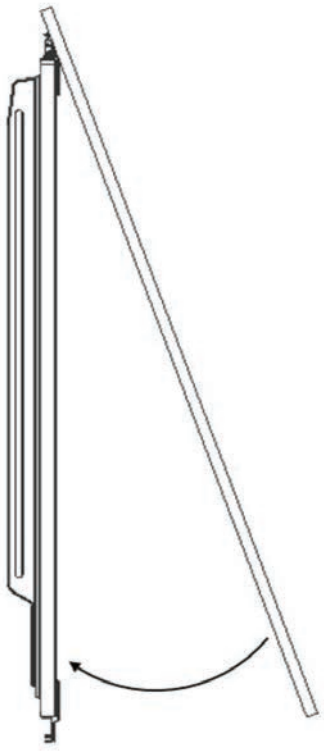

How to Align the Fridge Door with Bolts:
Position of the Furniture Doors to the kitchen furniture must be flush. To achieve this, you should adjust 3D direction using by two fixing bolt to perform fine adjustments. First of all, review the position of the grouped Furniture Doors against the kitchen furniture. Distances between furniture must be 1/8" (3 mm), assuming that the furniture dimensions are correct. You can make door adjustments based on this distance.

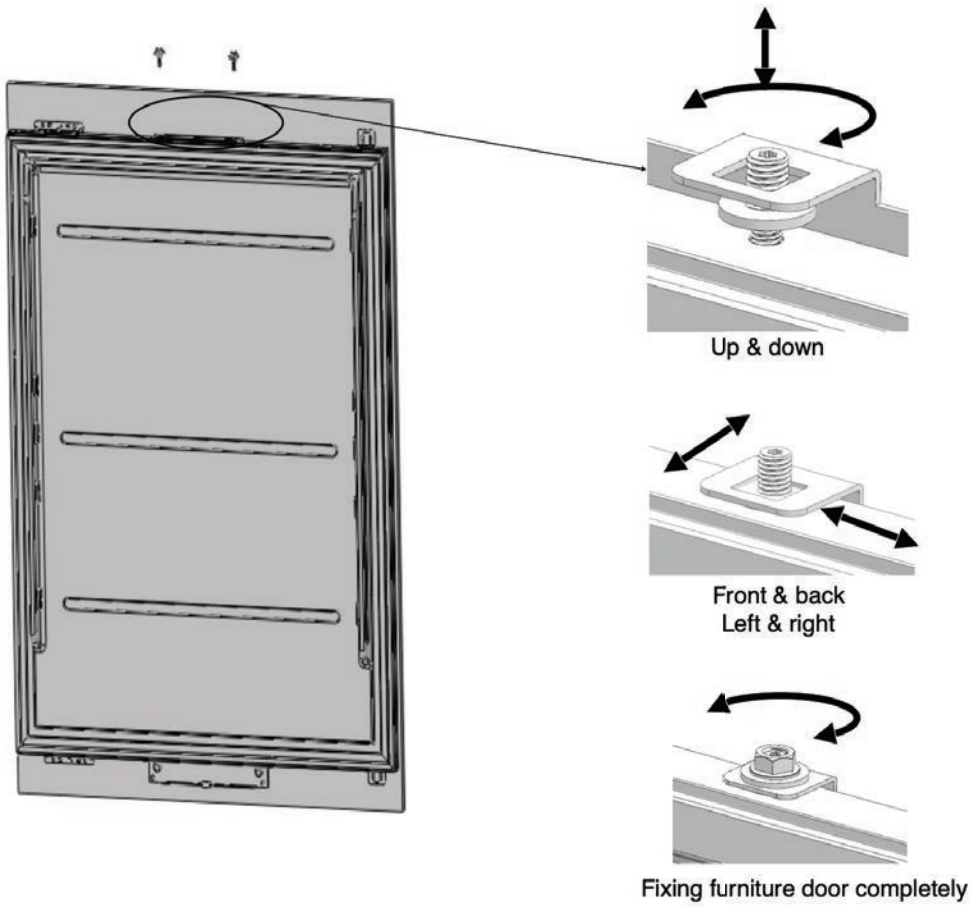

Aligning the Panel Door

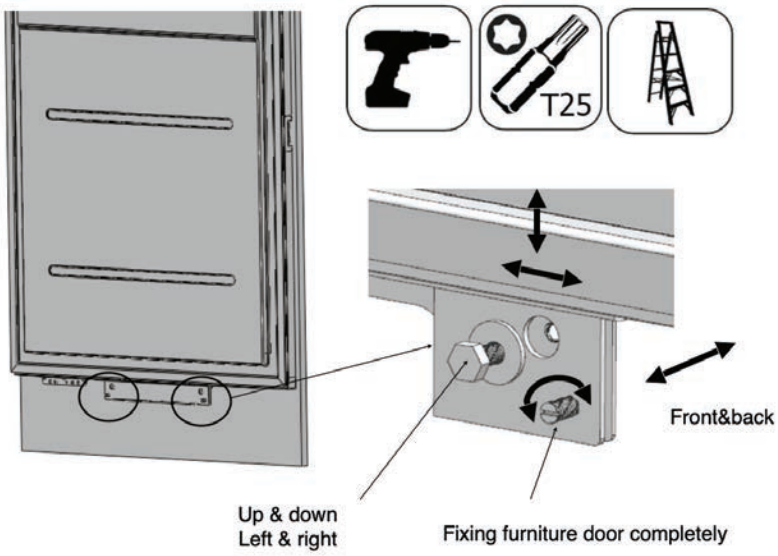

Use the door-door furniture connecting bracket (Item No16) to join the furniture door Use 1 screw door fixing bracket (Item No15) to fix on the door.
Use 2 screws (Item No17) to fix on the furniture door.

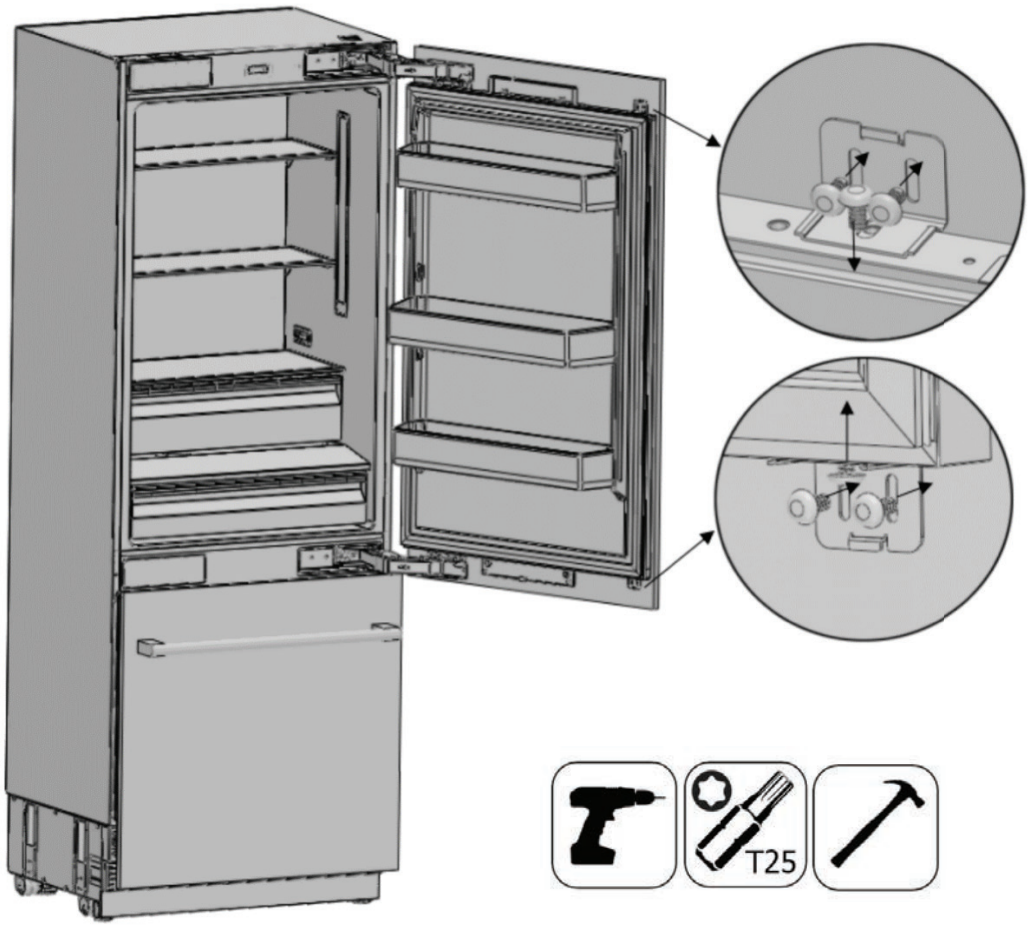

Attaching Upper & Lower Decorative Cover

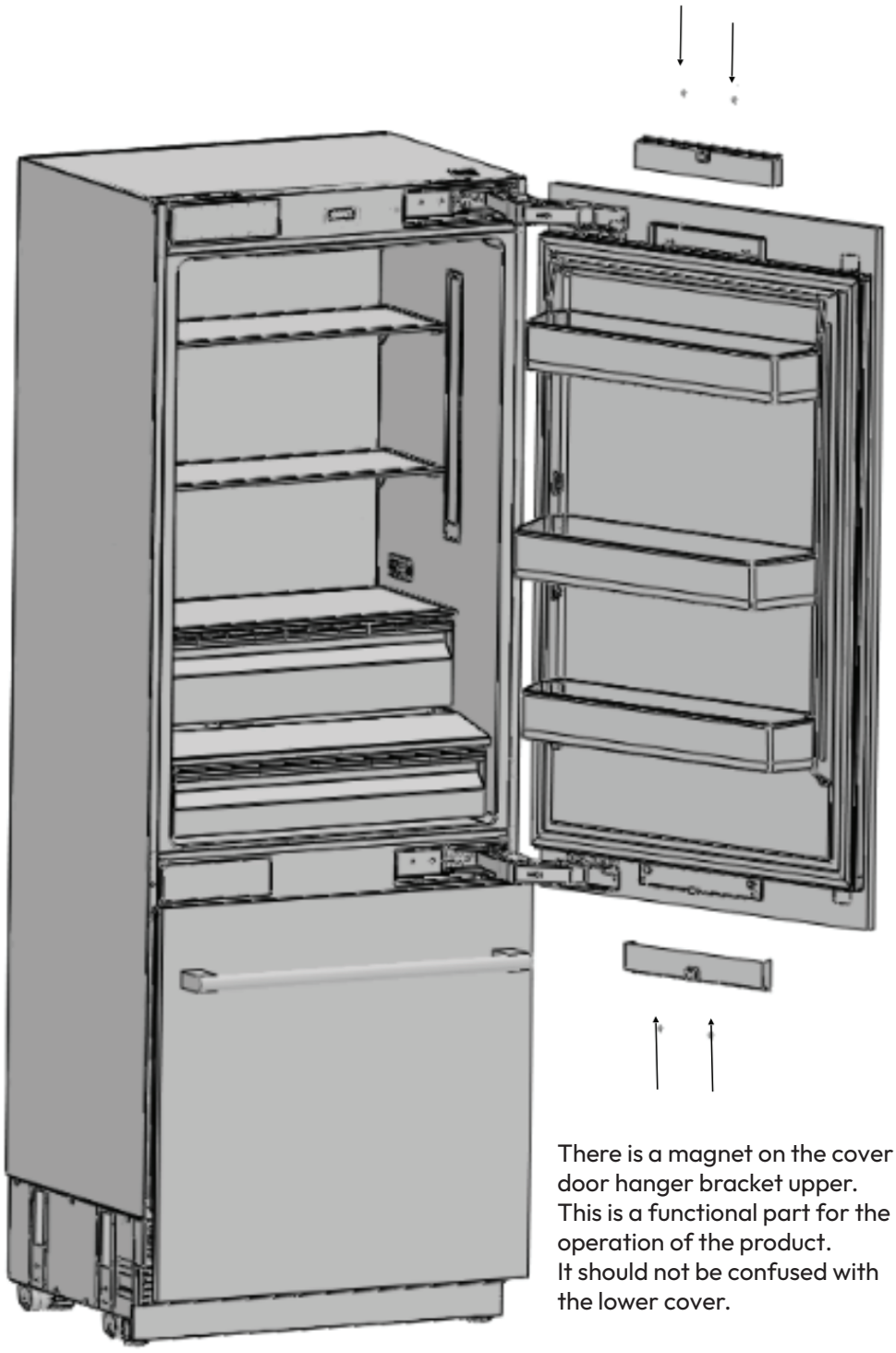

There is a magnet on the cover door hanger bracket upper.
This is a functional part for the operation of the product.
It should not be confused with the lower cover.

Attaching Upper & Lower Decorative Cover

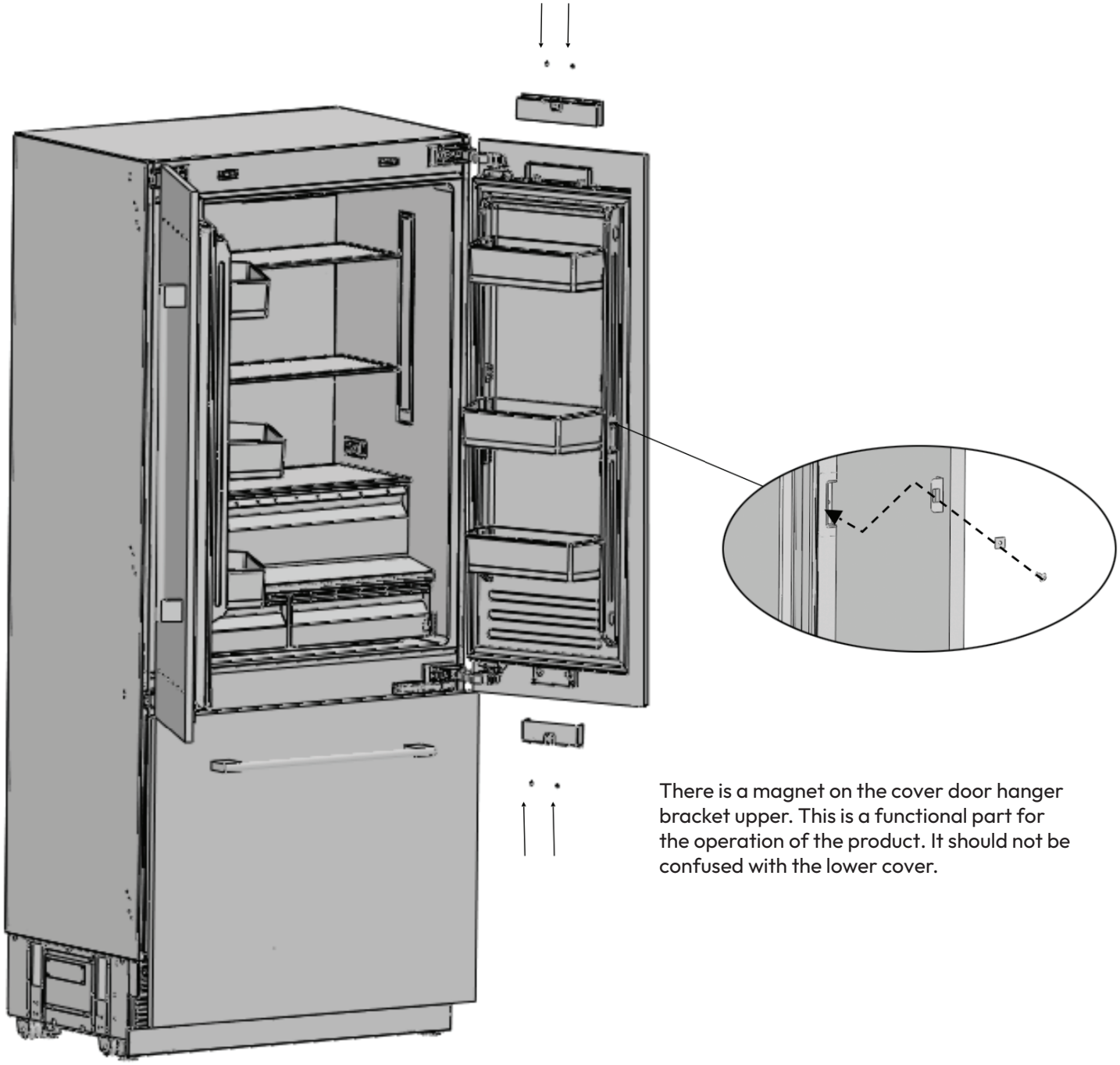

There is a magnet on the cover door hanger bracket upper. This is a functional part for the operation of the product. It should not be confused with the lower cover.

Installing Freezer Panel Door

How to align the furniture door upper part with screw freezer door hanger bracket (Item No8). Fixing the brackets with three screws (Item No 8) and three shims (Item No 8-1).

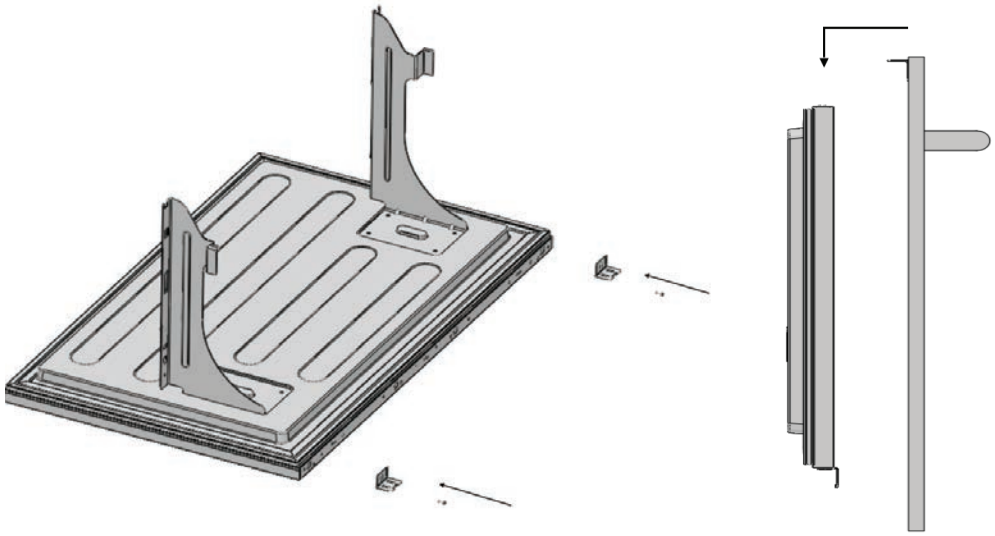

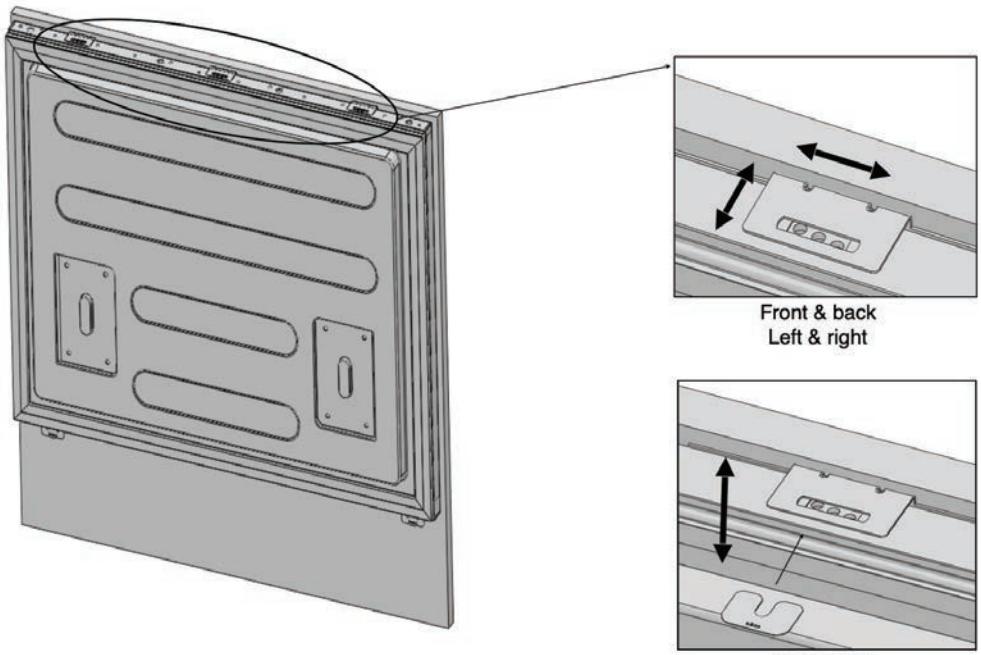

Front & back
Left & right

Up & down

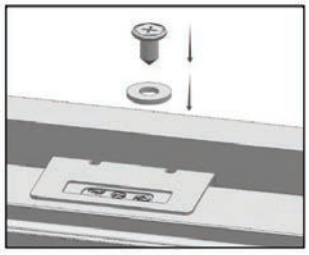

fixed

Installing Freezer Panel Door

Use the door-door furniture connecting bracket (Item No16) to join the furniture door.
Use 2screws (Item No17) to fix on the furniture door. Next, Clip the cover furniture door bracket (Item No14).

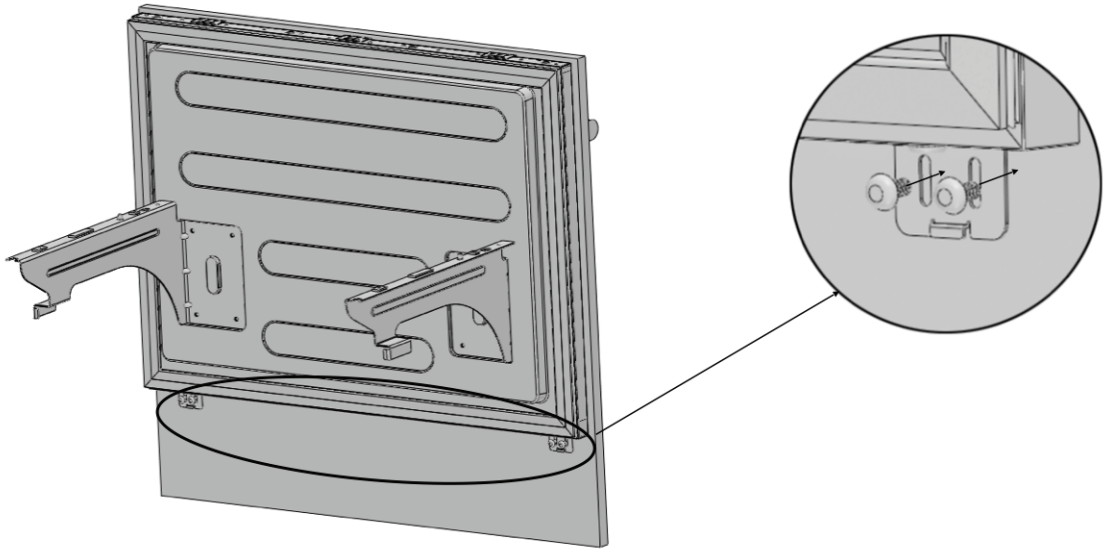

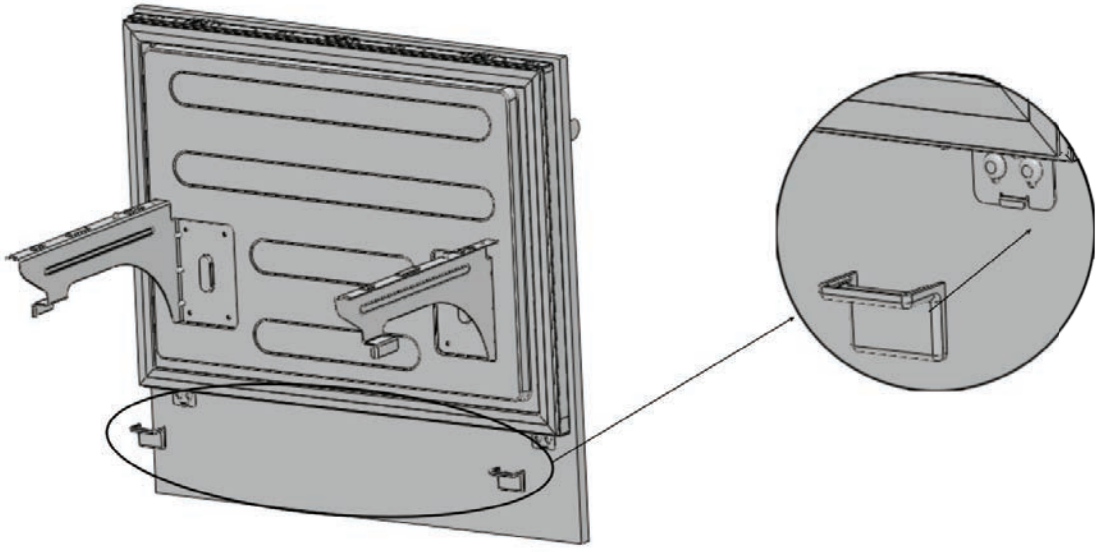

Installing Freezer Panel Door

You must keep these parts for future use. You will need them if you want to change the door directions. Install the Freezer Furniture door assembly onto the rails.

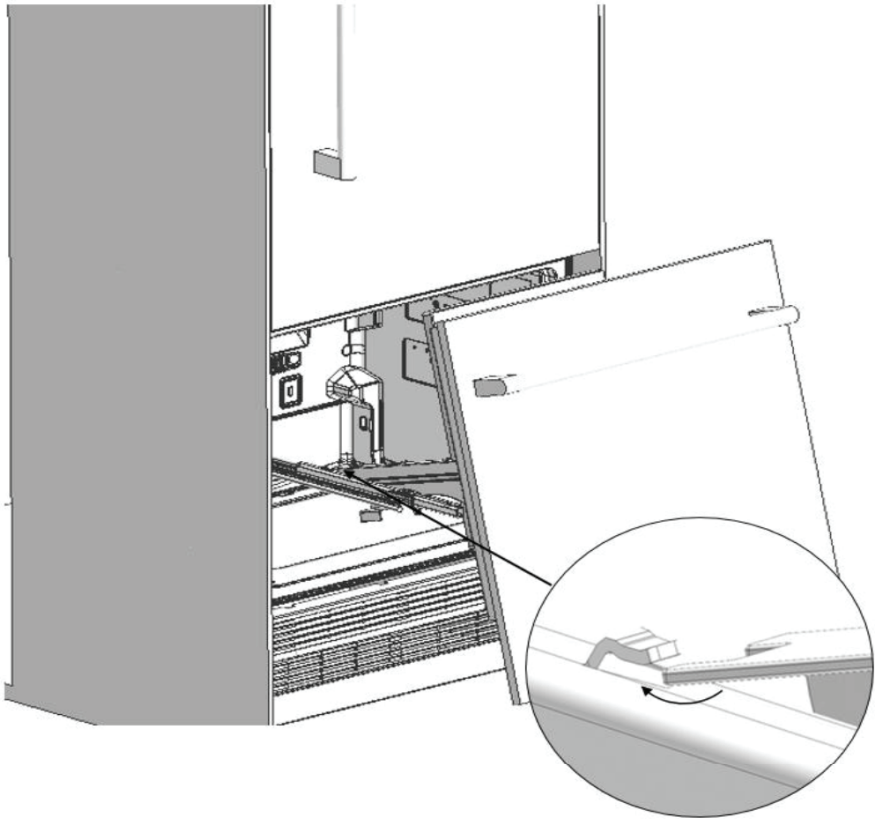

Fix the Freezer Furniture door assembly onto the rails with 2 screws. Position the drawer onto the rail and tigthen the screws

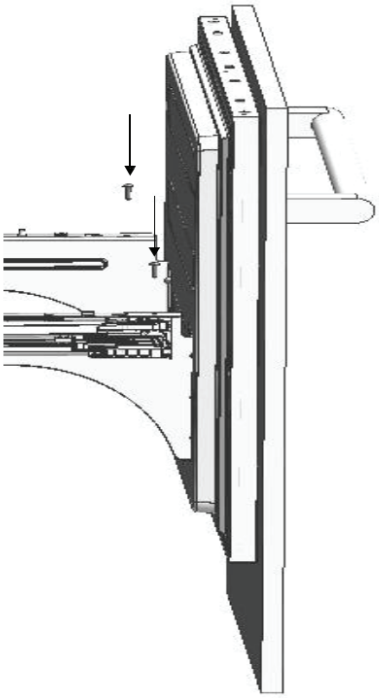

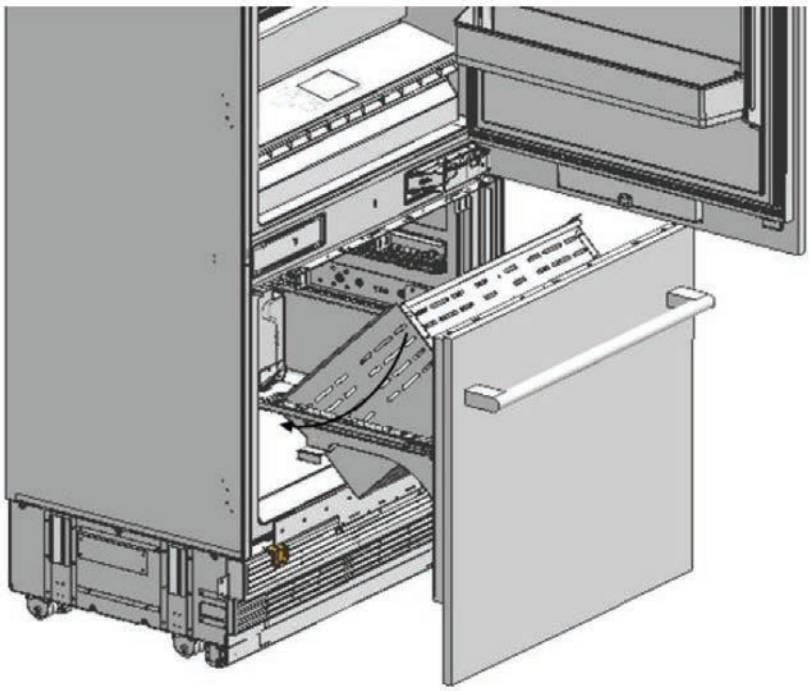

Installing Freezer Panel Door

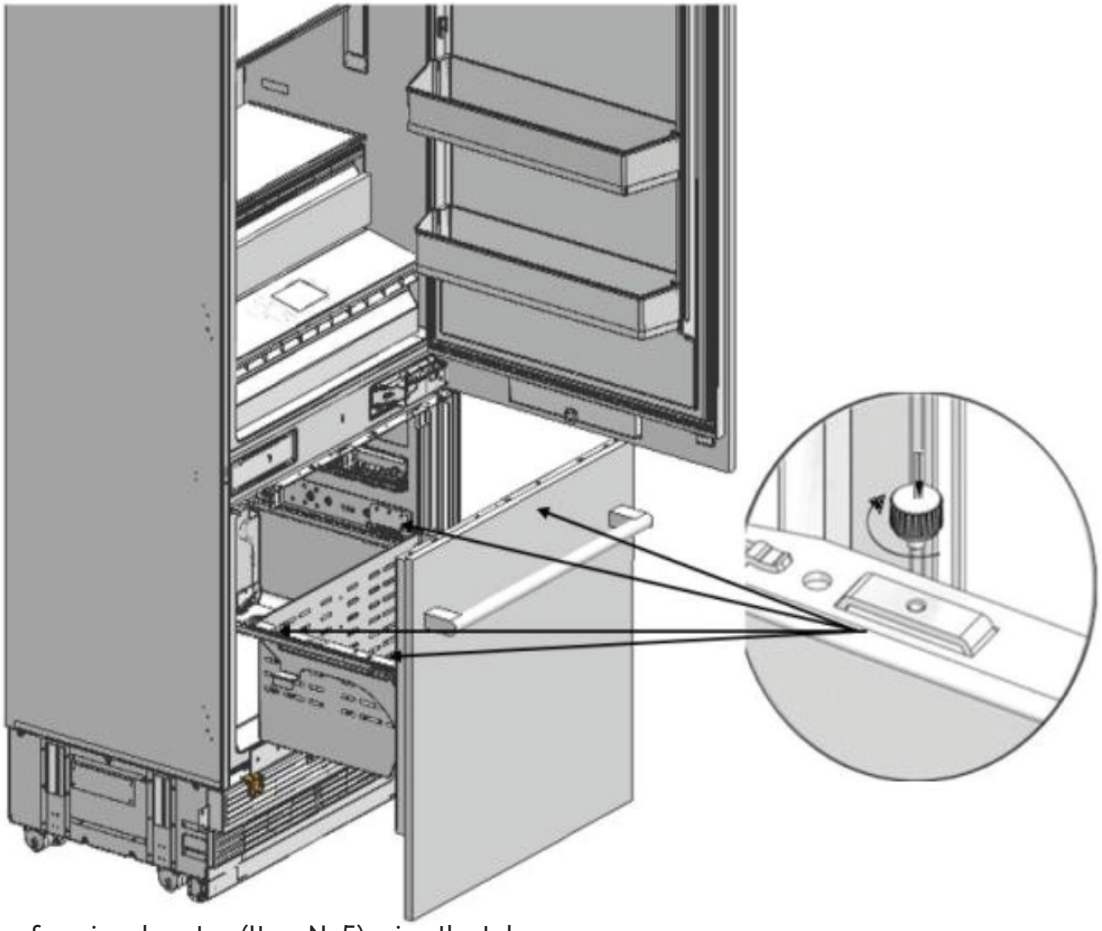

Attach the cover freezing door top (Item No5) using the tabs.

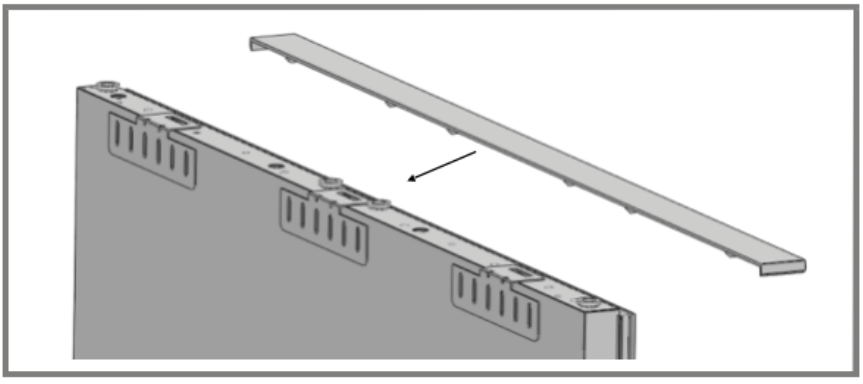

Attaching Door Trim

You must keep these parts for future use. You will need them if you want to change the door directions. Install the Freezer Furniture door assembly onto the rails.

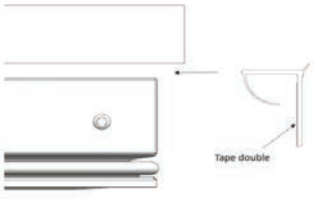

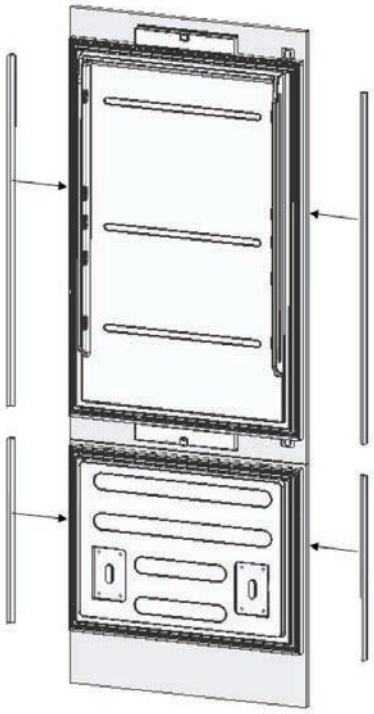

Hinge Adjustment

Use a drill to adjust the hardness of the upper and lower hinges of the fridge door. Set the hinge adjustment screw to position “I” from position “O”. The door must be fully open during this adjustment. This adjustment must definitely be performed after the door has been adjusted.

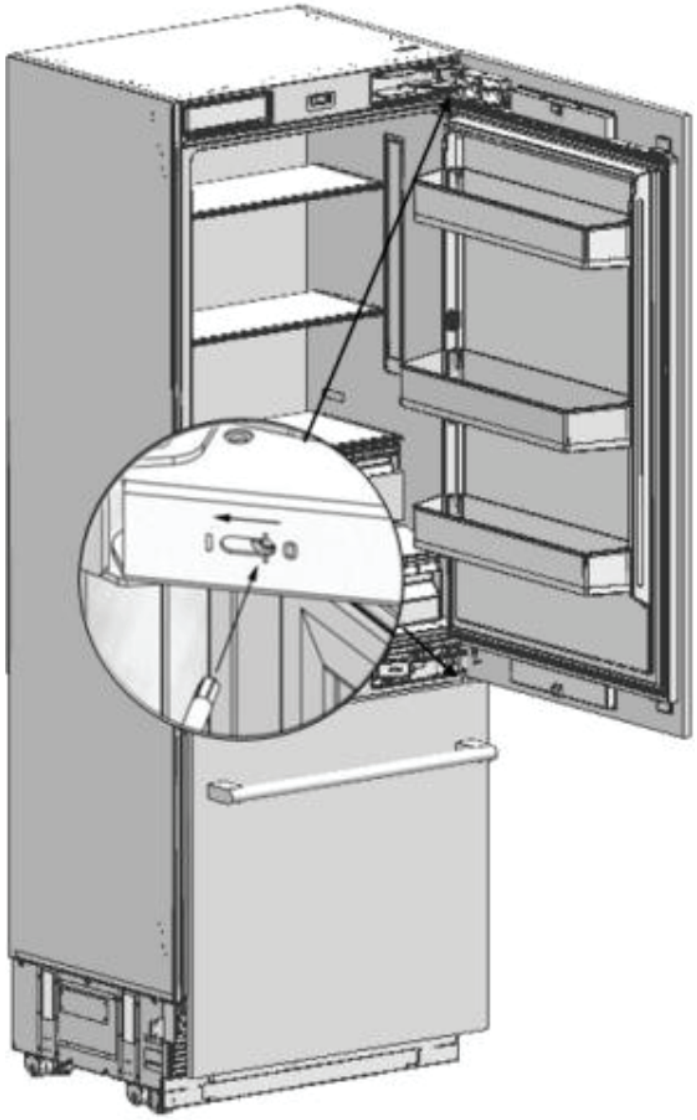

Changing Direction of Fridge Door

In order to change the direction of the door, you must remove it first. Set the hardness level of the hinge to “0”. Failure to set the hinge to “0” and continuing the installation like that may cause injury. Remove the trim fridge furniture side.

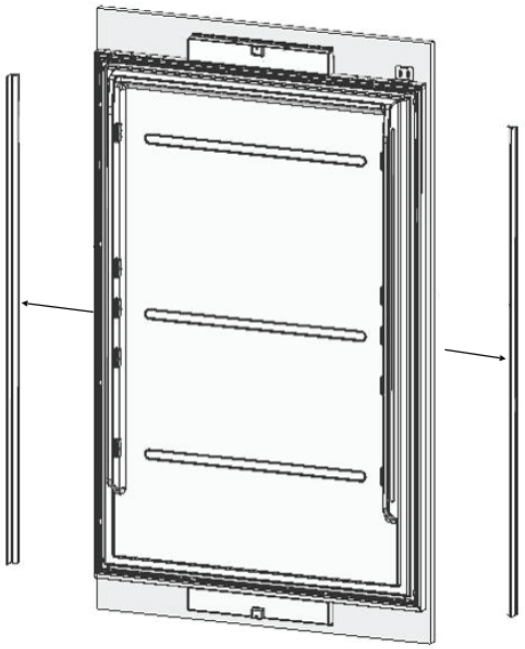

Loosen 2 screws of the upper cover of the fridge door and remove it. Remove the upper adjustment kits. Loosen 2 screws of the lower cover of the fridge door and remove it.



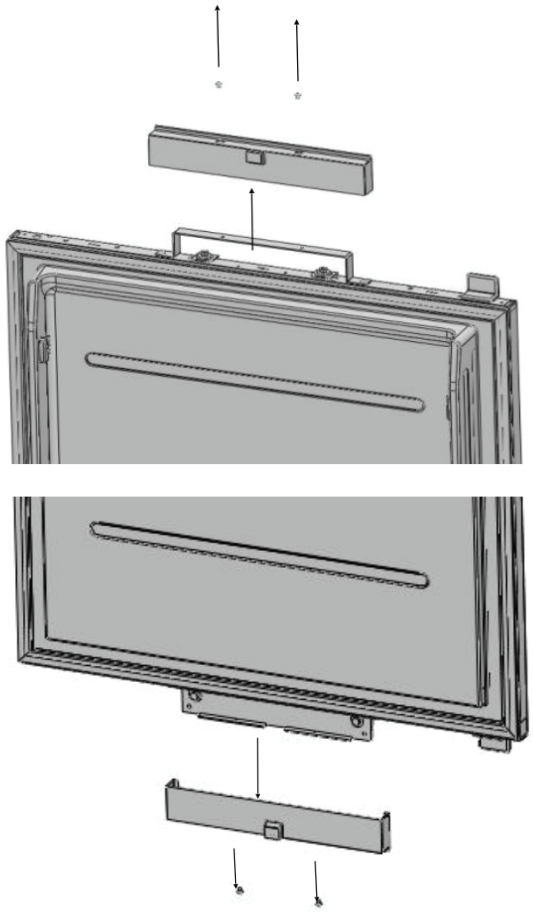

Changing Direction of Fridge Door

Remove fridge lower and upper bracket and fixing screws.

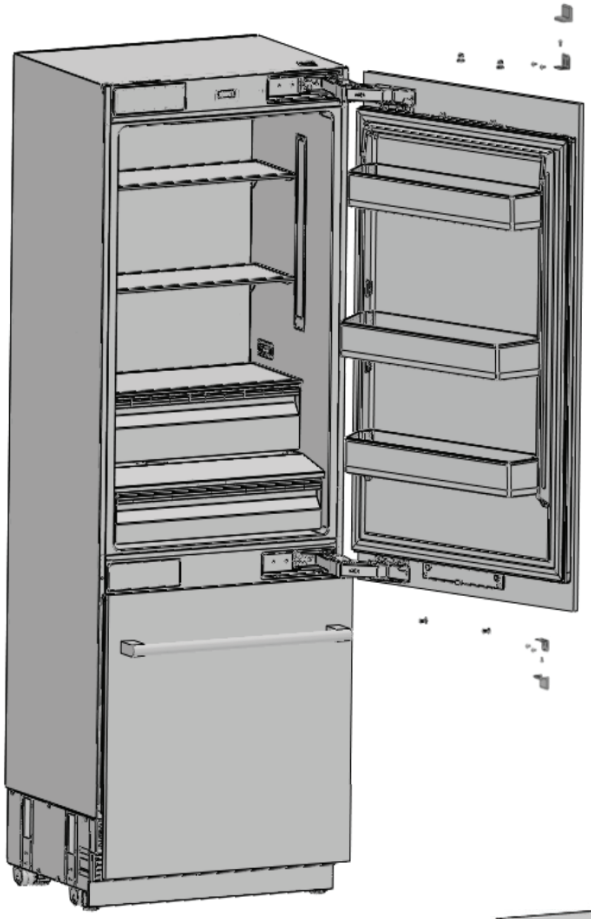

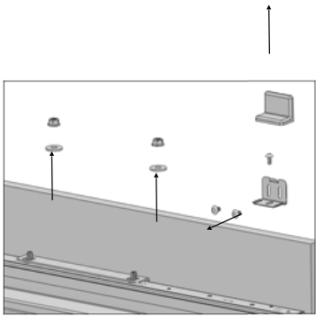

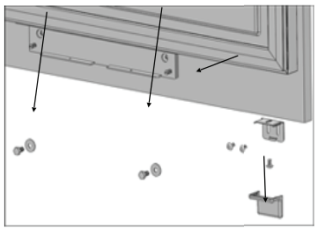

The clad door will be released when these screws are removed. You must take measures to prevent the door from falling.

You can tape the Furniture Door to the Inner Door or ask for help from another person. Take the Fridge Furniture Door and lay it down on a table upside down. You must attach the Furniture Door by rotating it 180° based on its current position.

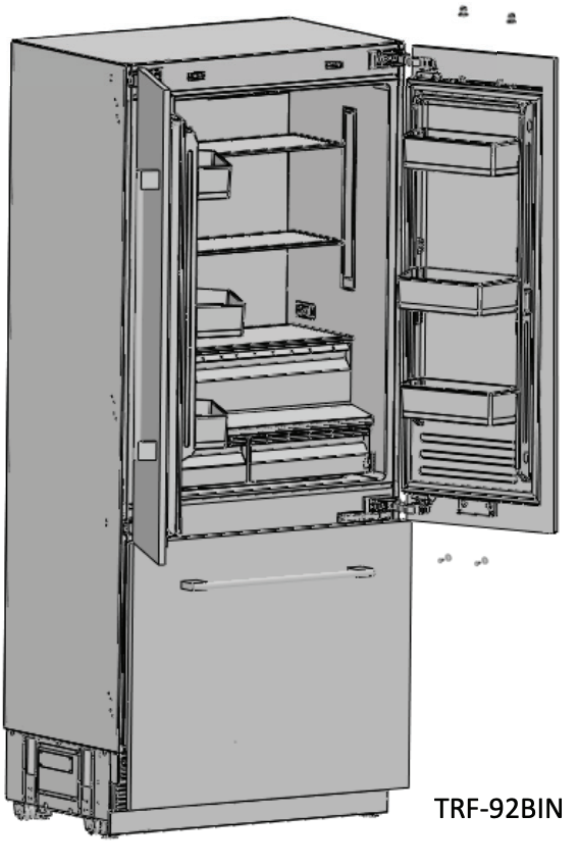

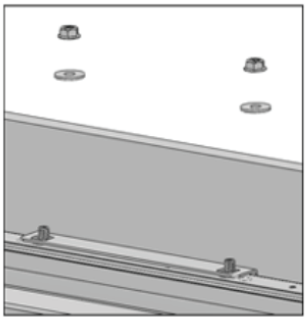

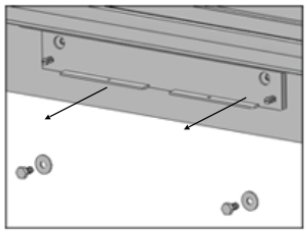

TRF-92BINFIA

Removing and Preparing Fridge Inner Door

The clad door will be released when these screws are removed. You must take measures to prevent the door from falling. You can tape the Furniture Door to the Inner Door or ask for help from another person.

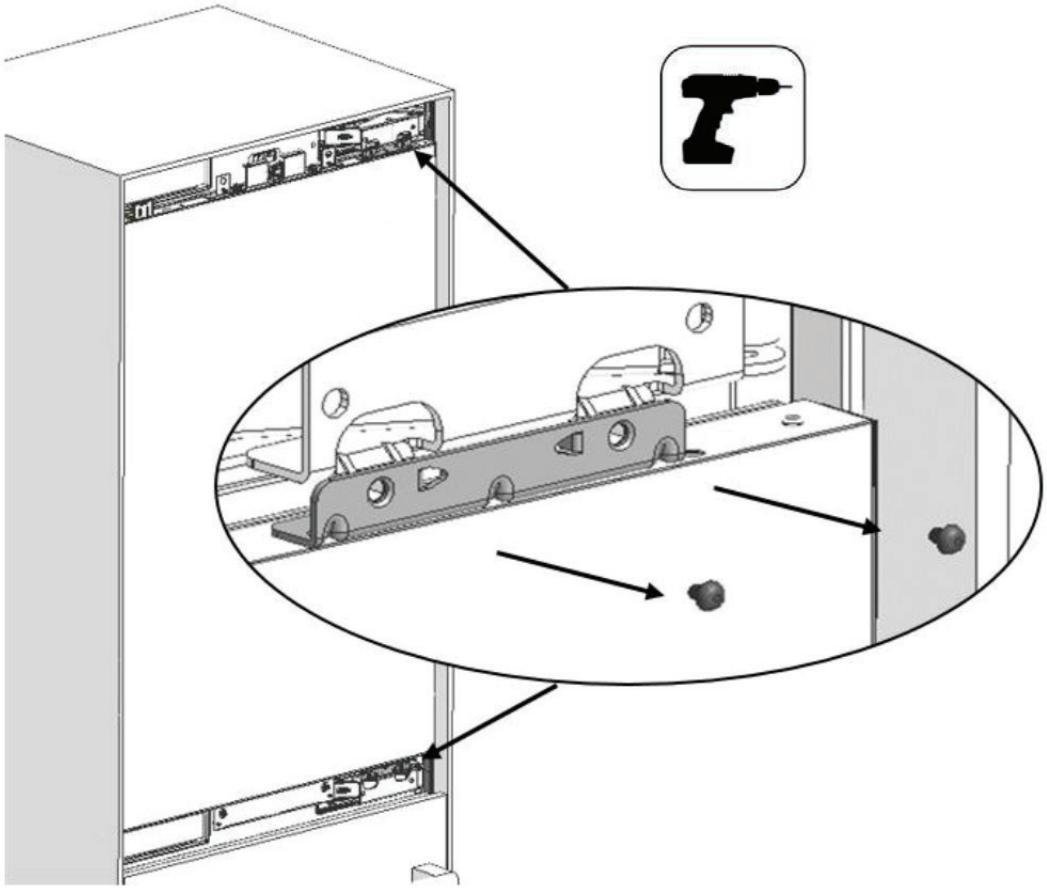

Take out the fridge door and lay it down on a table remove the fixing parts and screw them to the opposite side of the door as shown figure.

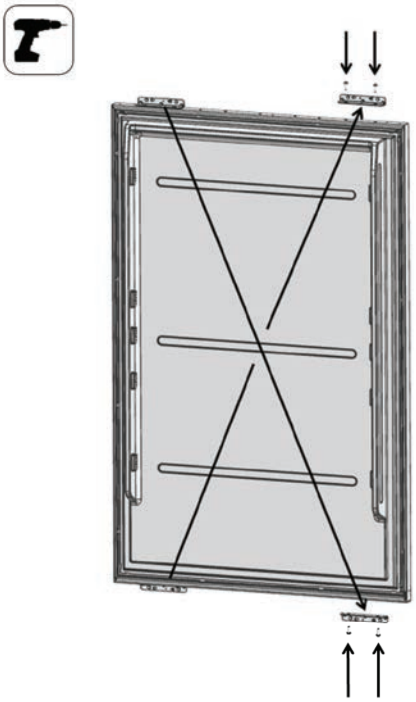

Replacing the Hinges

Take out the fridge door and lay it down on a table remove the fixing parts and screw them to the opposite side of the door as shown figure.

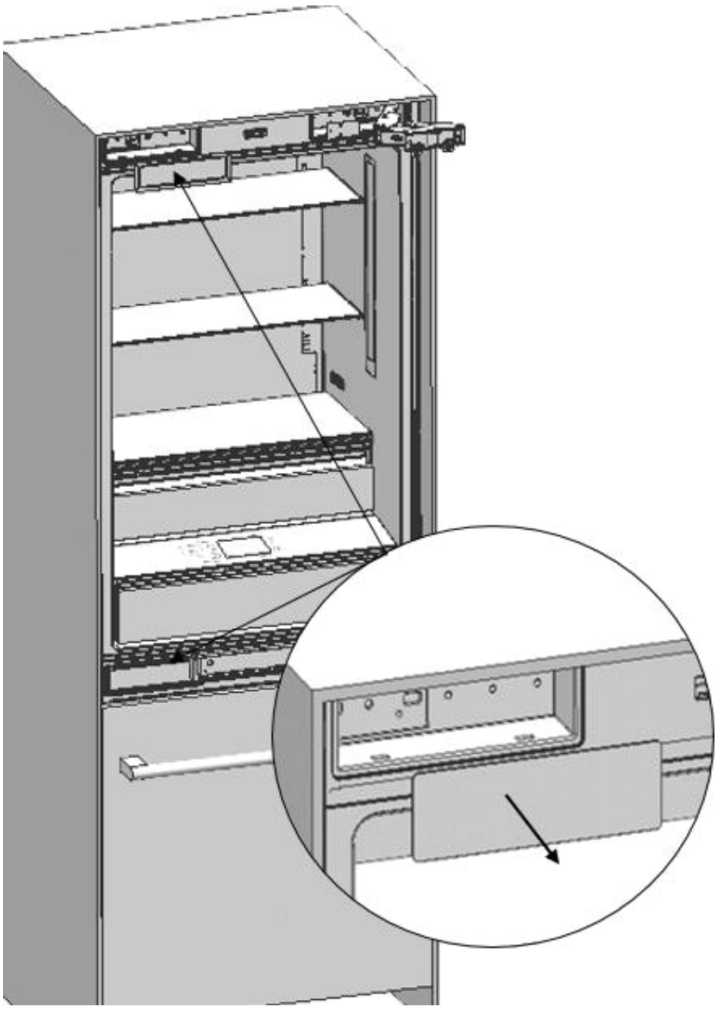

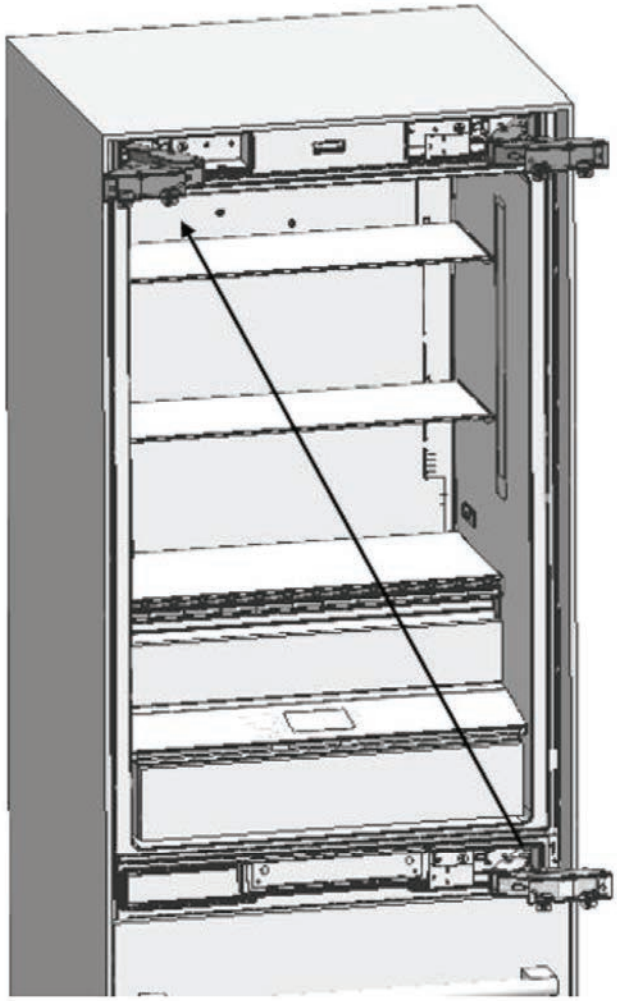

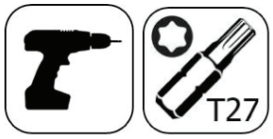

Remove the lower right hinge by loosening its 2 screws and fix it to its slot at the upper leftside.

Replacing the Hinges

Remove the upper right hinge by loosening its 2 screws and fix it to its slot at the lower Left side.

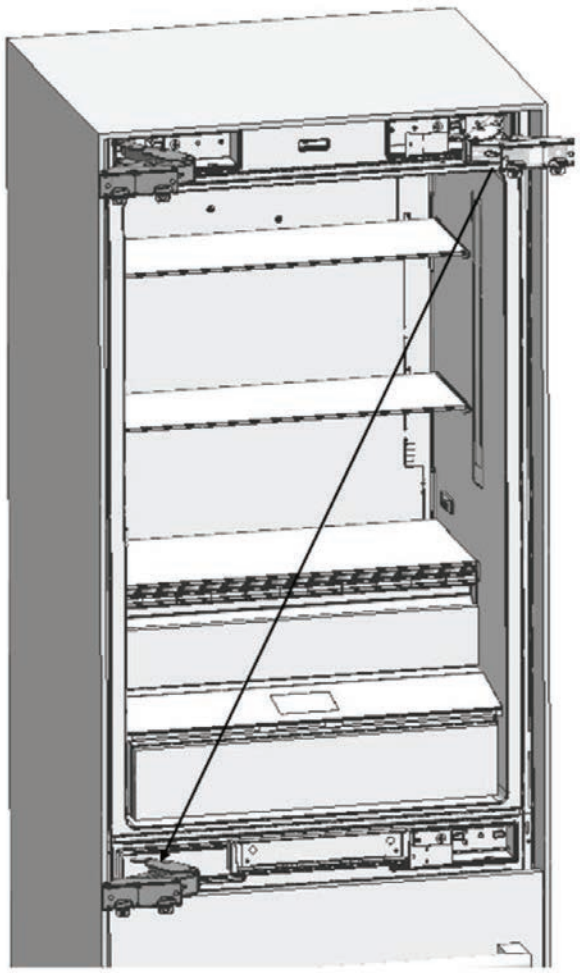

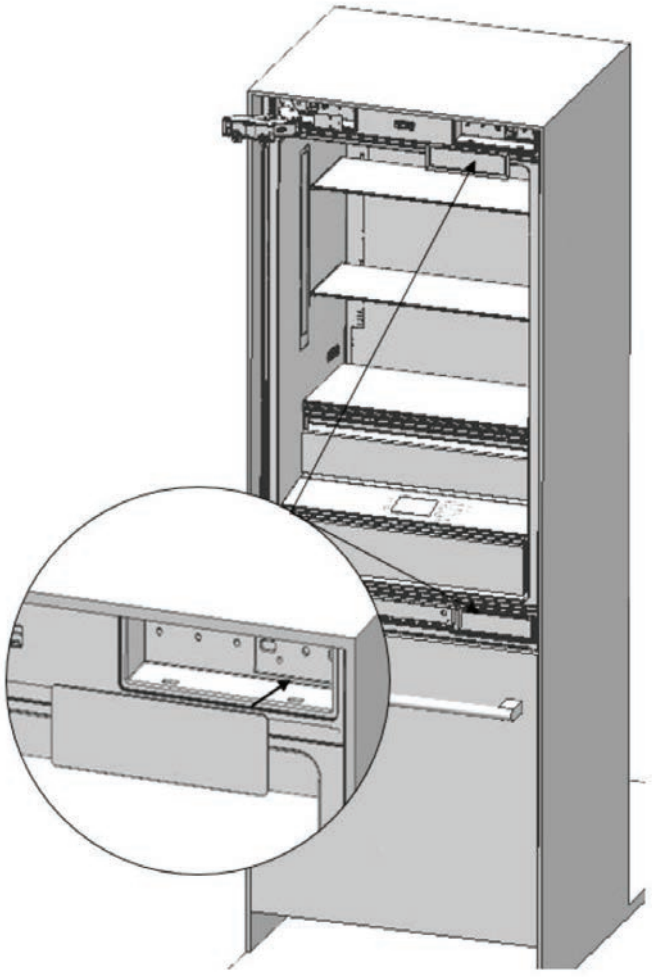

Attach the Hinge Slot Caps removed from the left side to the Hinge Caps at the right side.

Installing the Fridge Door

Attach the Hinge Slot Caps removed from the left side to the Hinge Caps at the right side



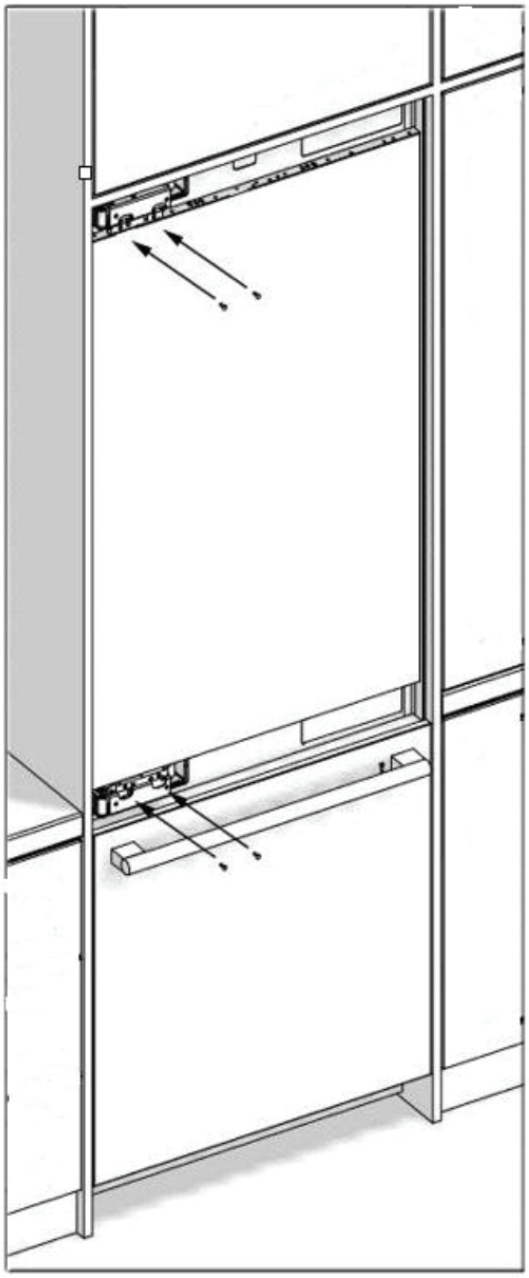

Cabin Dimensions for Dual Install

Cabin dimensions below must be checked before starting the installation.

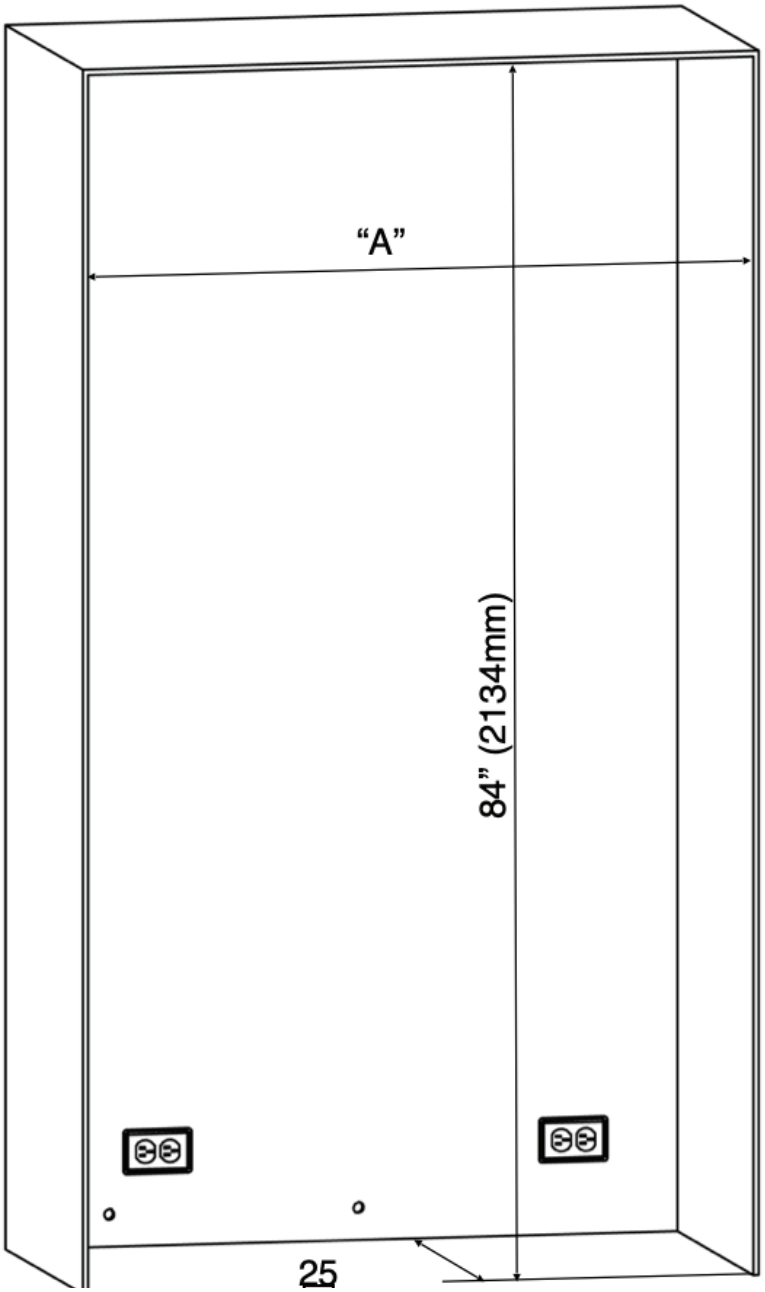

Category	30in + 30in	30in + 36in	36in + 36in
“A” Dimension	60” (1524mm)	66” (1676mm)	72” (1828mm)

Category	30in Built In	36in Built In
Abbreviation	76	91

Electrical and Water Locations

Location of the electrical wiring must be within the range given below. Do not use extension cables or two-pin adaptors and do not remove the ground terminal of the grounding cable. A qualified electrician must ensure that the poles of the socket are connected correctly. Verify that the grounding of the socket is correct.

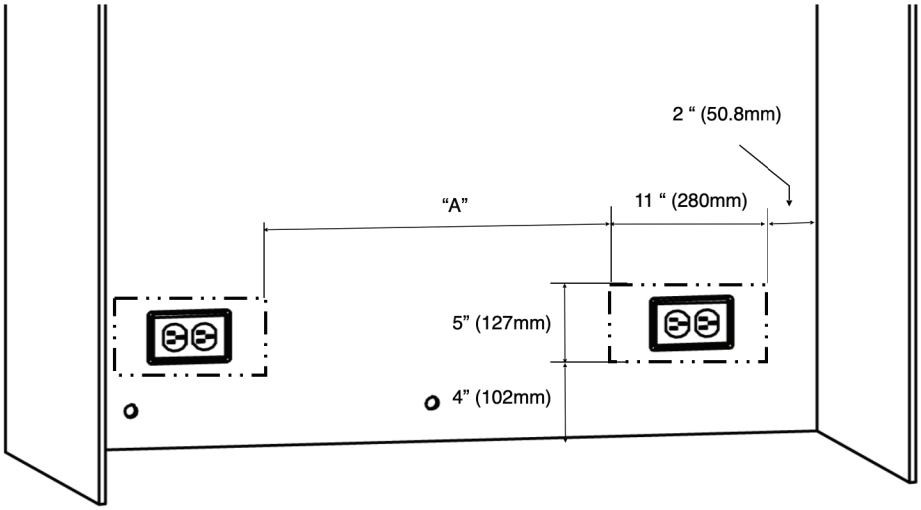

Category	76+76	76+91	91+91
“A” Dimension	19 1/8” (485mm)	25 1/16” (637mm)	25 1/16” (637mm)

The water connected to the water mains must be potable. Location of the water system must be within the range given below. Water system of the refrigerator must be connected to the water mains system in the house.The user must be able to switch it on/off with the valve when necessary. Objects that might pierce the water hoses or cause them to twist must not be present where the water line is installed. Pressure of the water system must be between 25-80 psi (1.7-5.5 Bar).
If the water pressure exceeds 80 psi, install a pressure limiting device or water impact protector to the inlet valve.
Never install the product or operate the appliance if it is possible for the water pressure to exceed 120 psi.

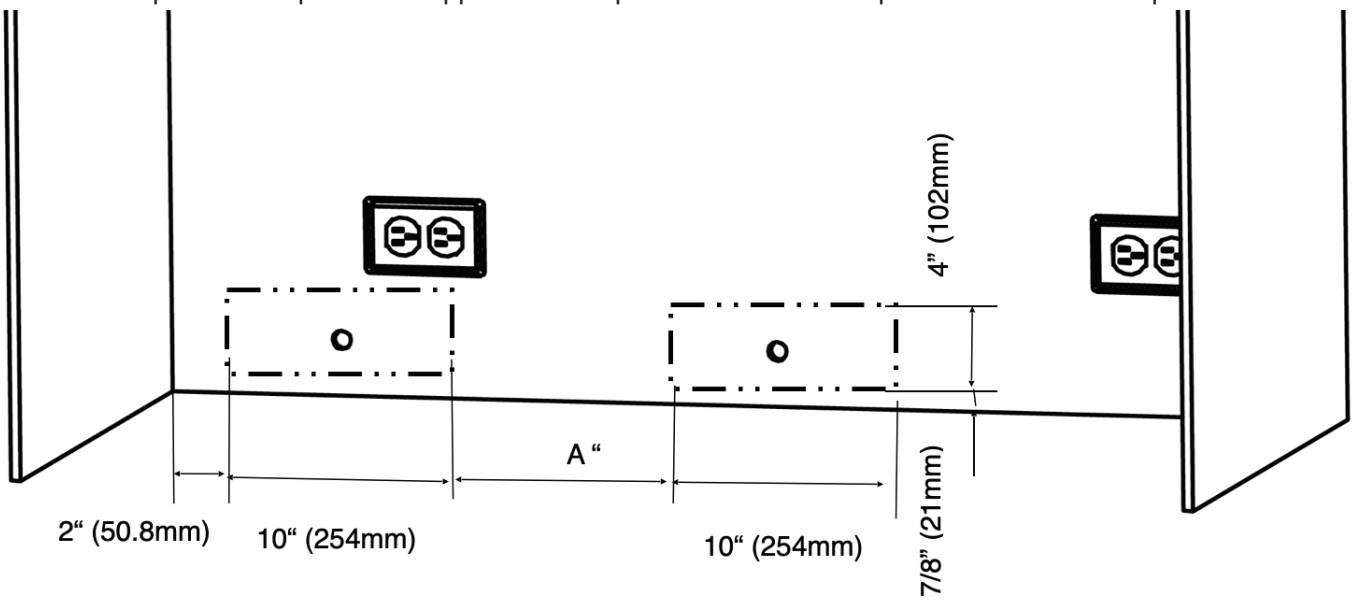

Category	76+76	76+91	91+91
“A” Dimension	20” (508mm)	20” (508mm)	26” (660mm)

Mounting Part List

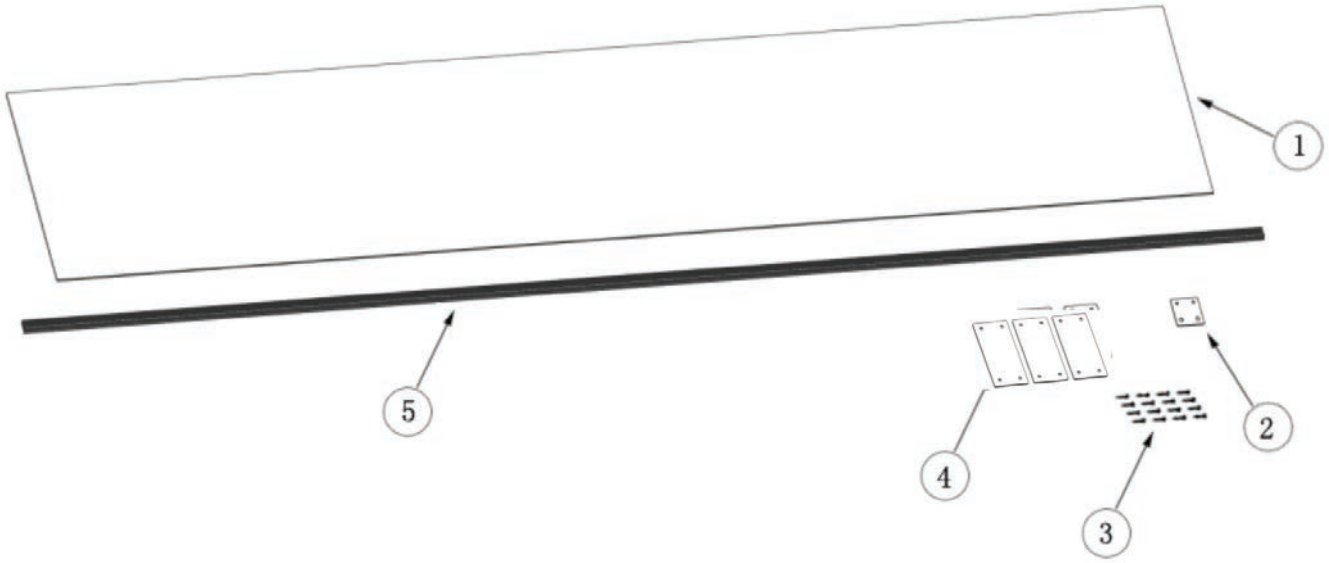

No	Part name	Spec	Q'ty
1	Insulation sponge	Sponge, gray, T3.0*400*1750	1
2	Connecting bracket	T2.0, Cr+zn-coating	2
3	Truss washer head	M4*12	16
4	Metal fastener	metal	3
5	Trim furniture middle	PVC extrusion L=1876	1



Truss washer head screw
Spec : M4x12
Fixing Refrigerator
Such as cabinet and door (press part)

Insulator

Stick the Insulation Sponge (Item No1) to the side panel so that the sponge remains in between two cabins.

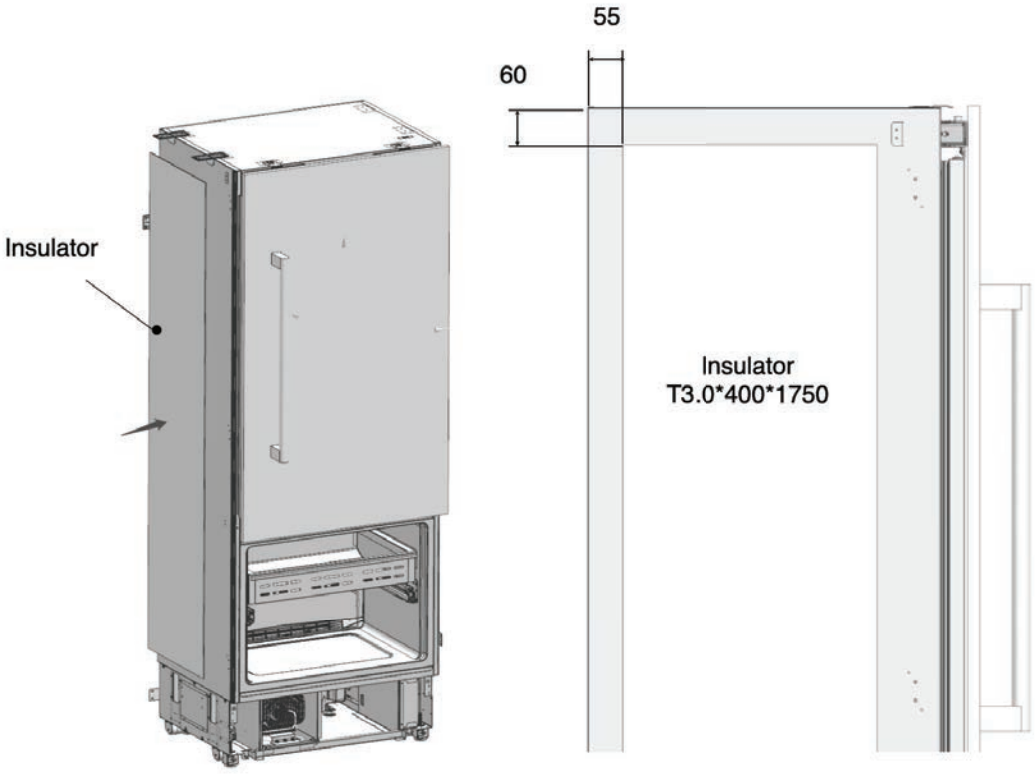

Attaching the Fastener & Connecting Bracket

Screw the connecting bracket(Item No2) and fasteners (Item No4) that are going to connect two refrigerators together. Make power and water connections of the refrigerator as explained before. After making sure that they are in alignment Screw the upper brackets to the other refrigerator.

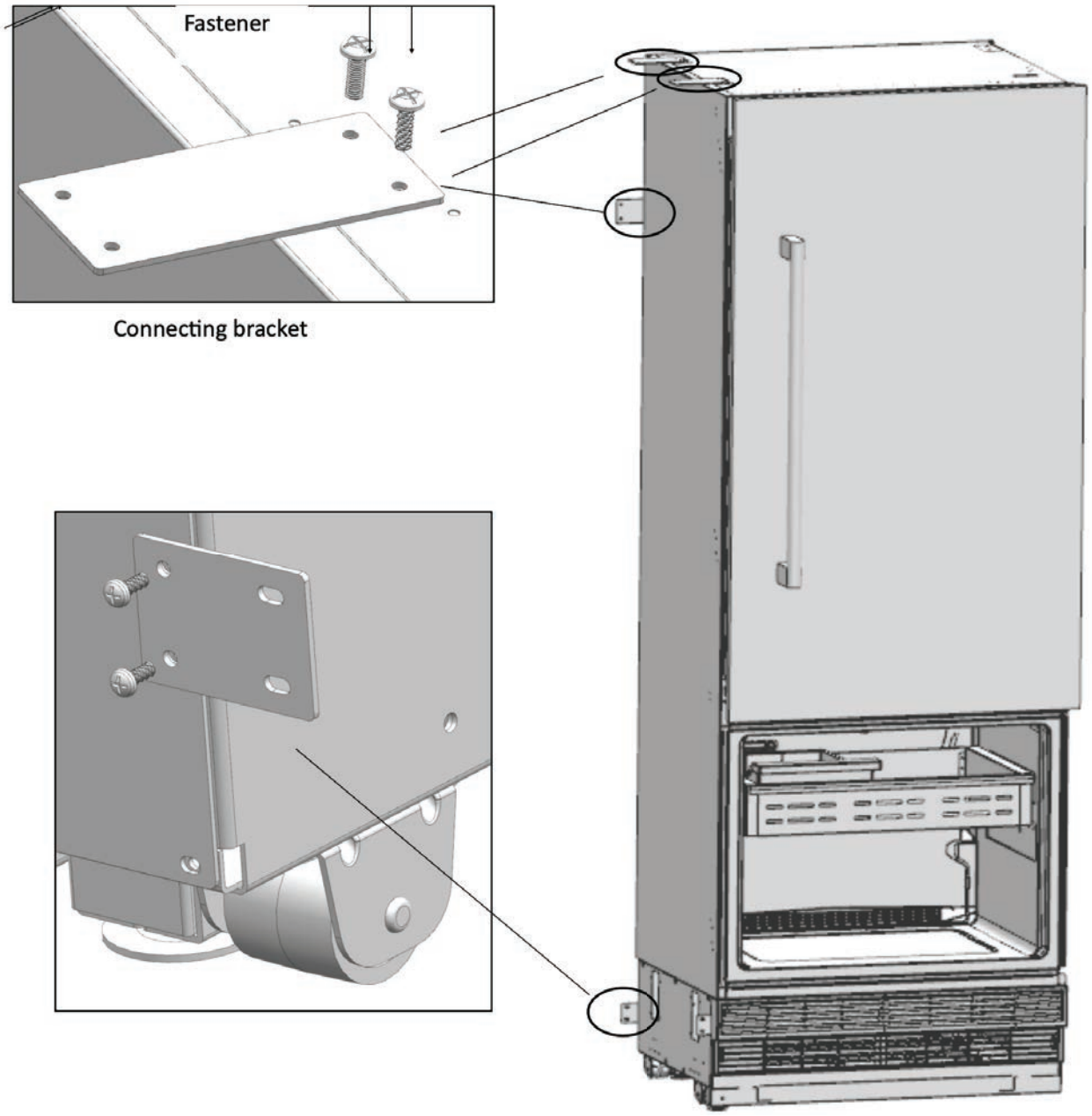

After making sure that they are in alignment screw the lower brackets to the other refrigerator.

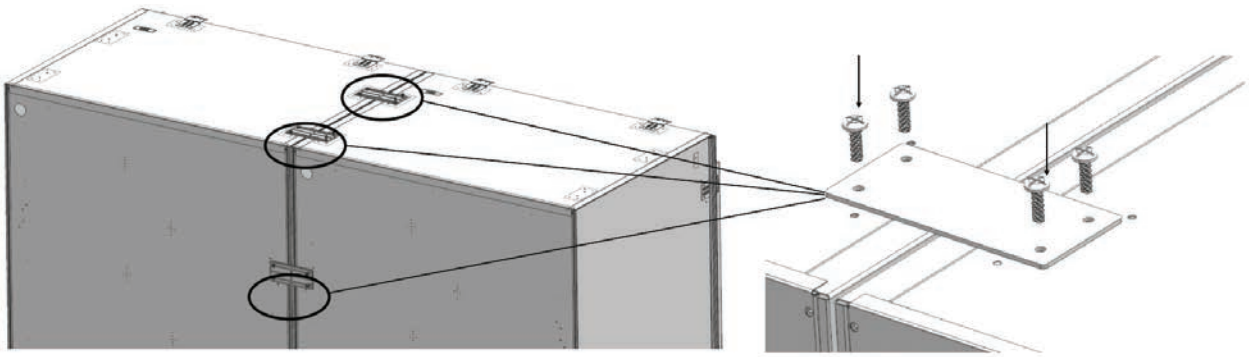

Attaching the Fastener & Connecting Bracket

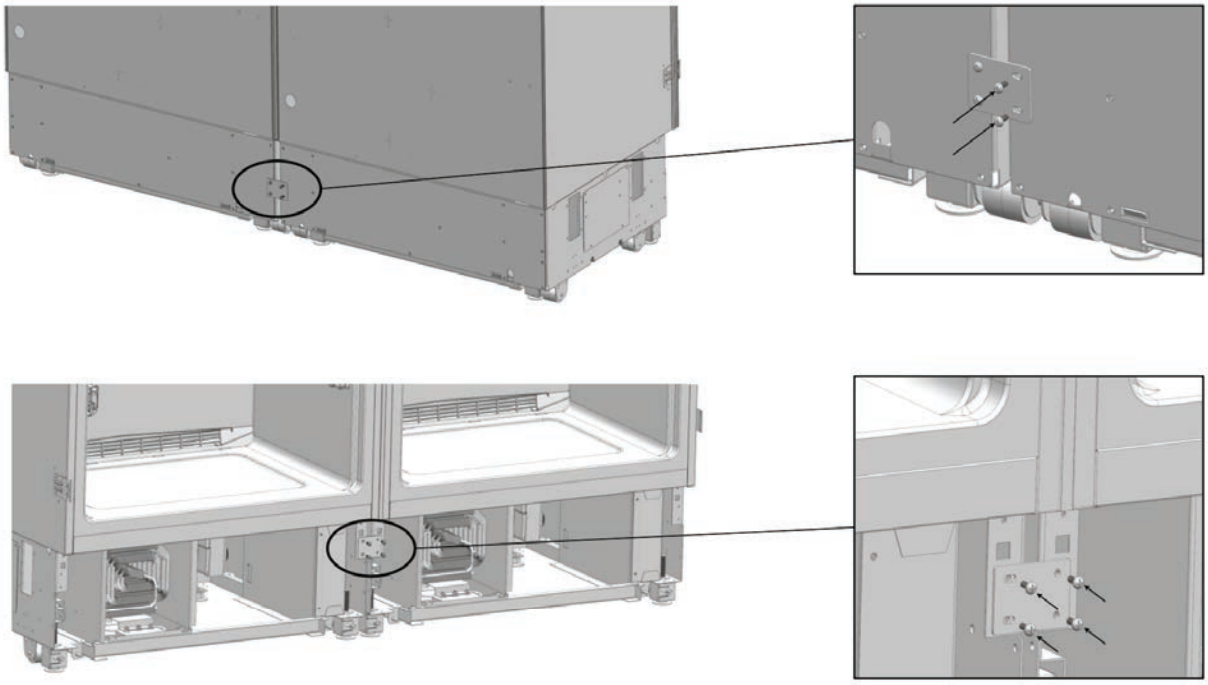

Adjusting the Height of the Fridge in the Cabin

Adjust the refrigerator height using the adjustable feet.

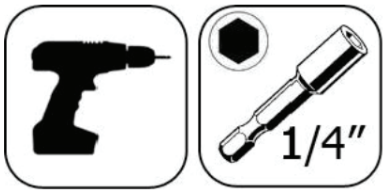

raise the front feet to reduce the risk of the cabin falling frontward.
A/D –Turn the key clockwise to lift the front
B/C –Turn the key clockwise to lift the rear

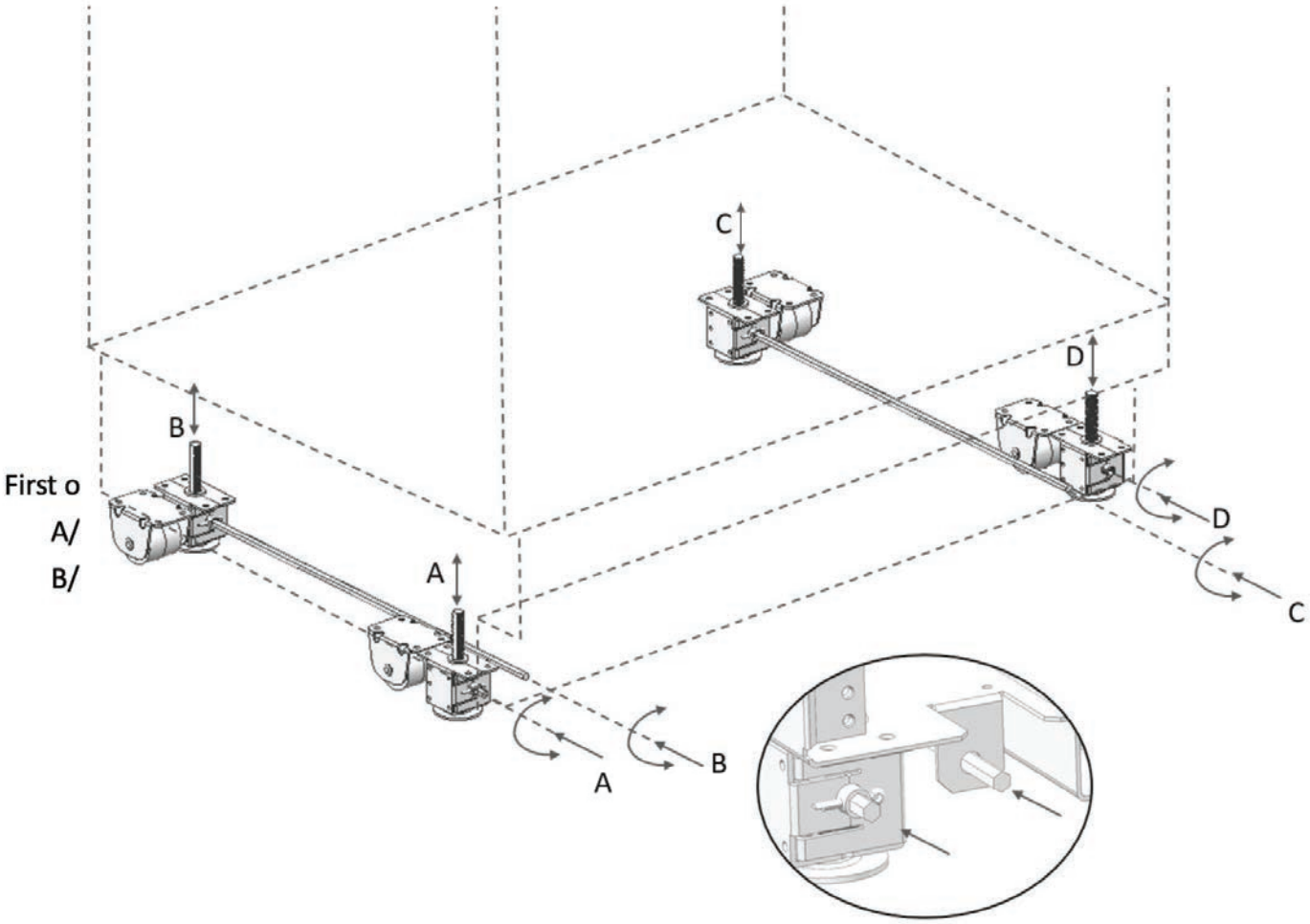

Securing Brackets to the Cabin Wall

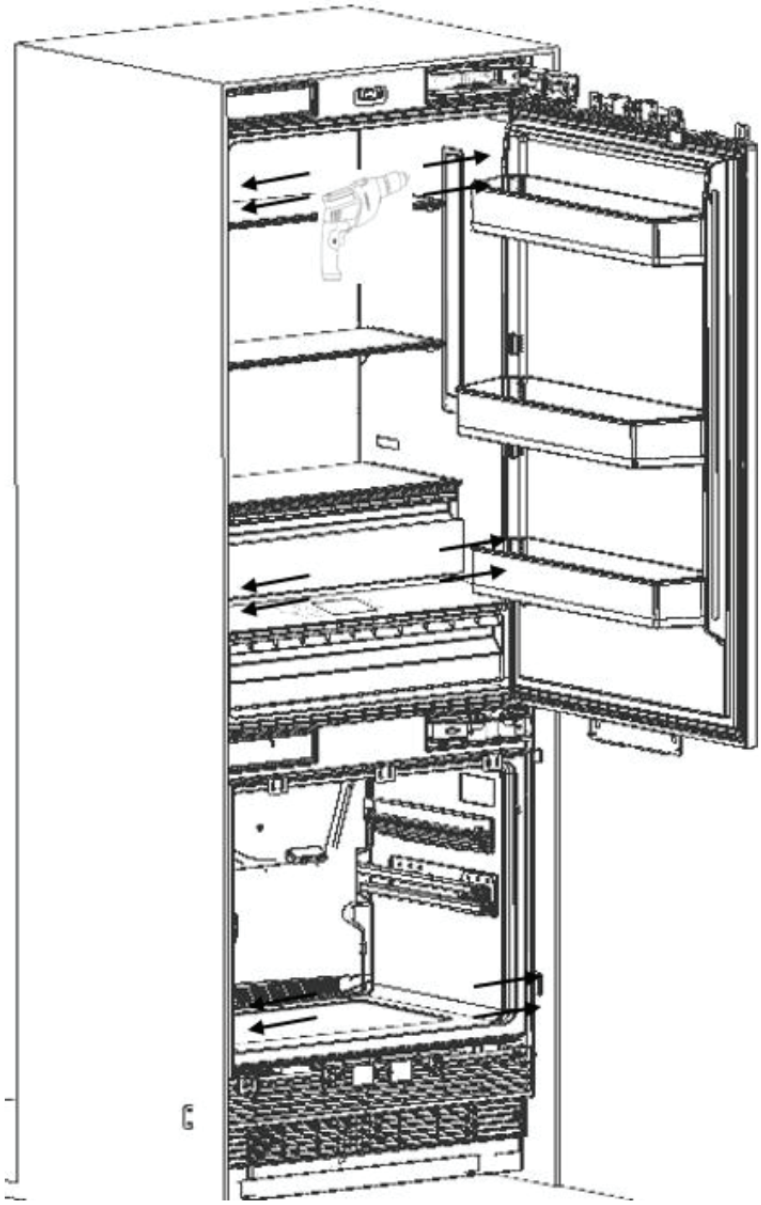



Attach the cabinet - cabin connecting bracket to the furniture with 12 screws.

Attach the cabinet- cabin connecting bracket to the furniture with 4screws.

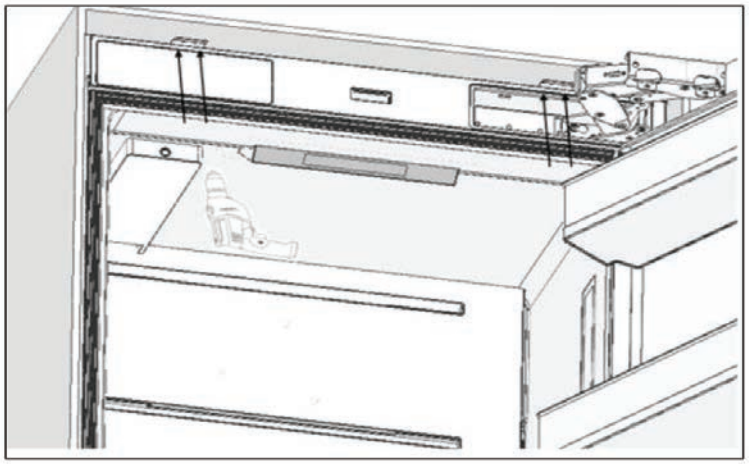

Attaching Decorative Parts

Attach the trim furniture **side** onto the Cabinet - cabin connecting bracket.

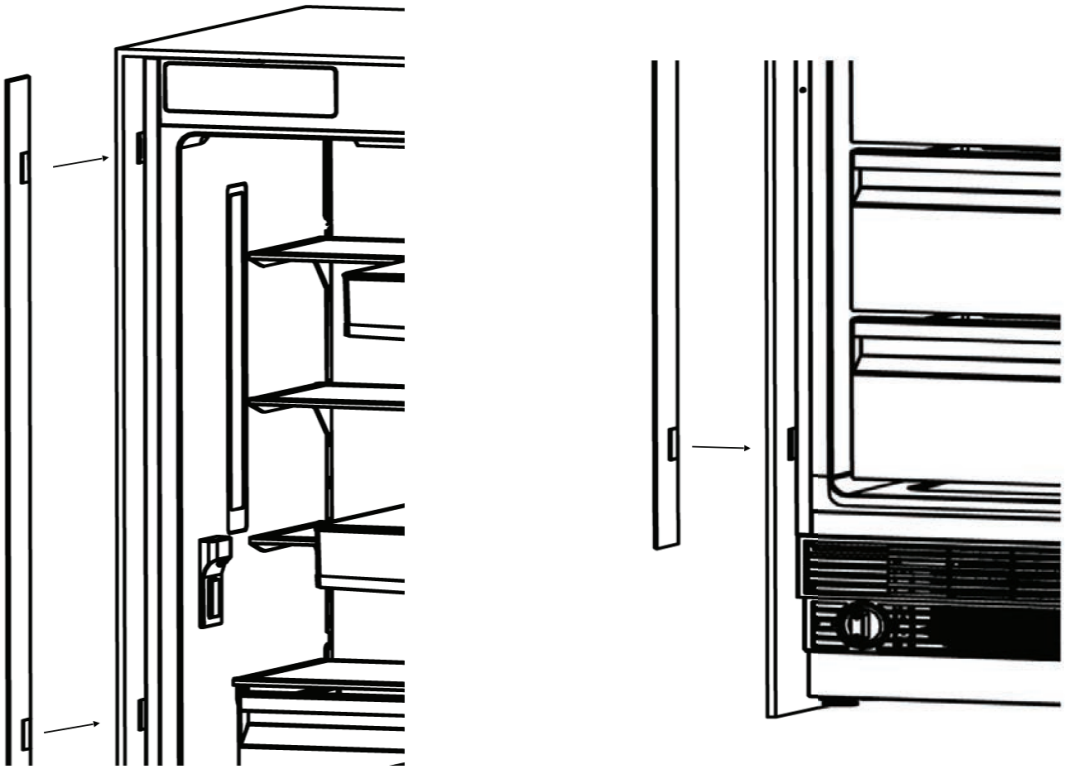

Attach to the trim furniture **top** onto the Cabinet- cabin connecting bracket.

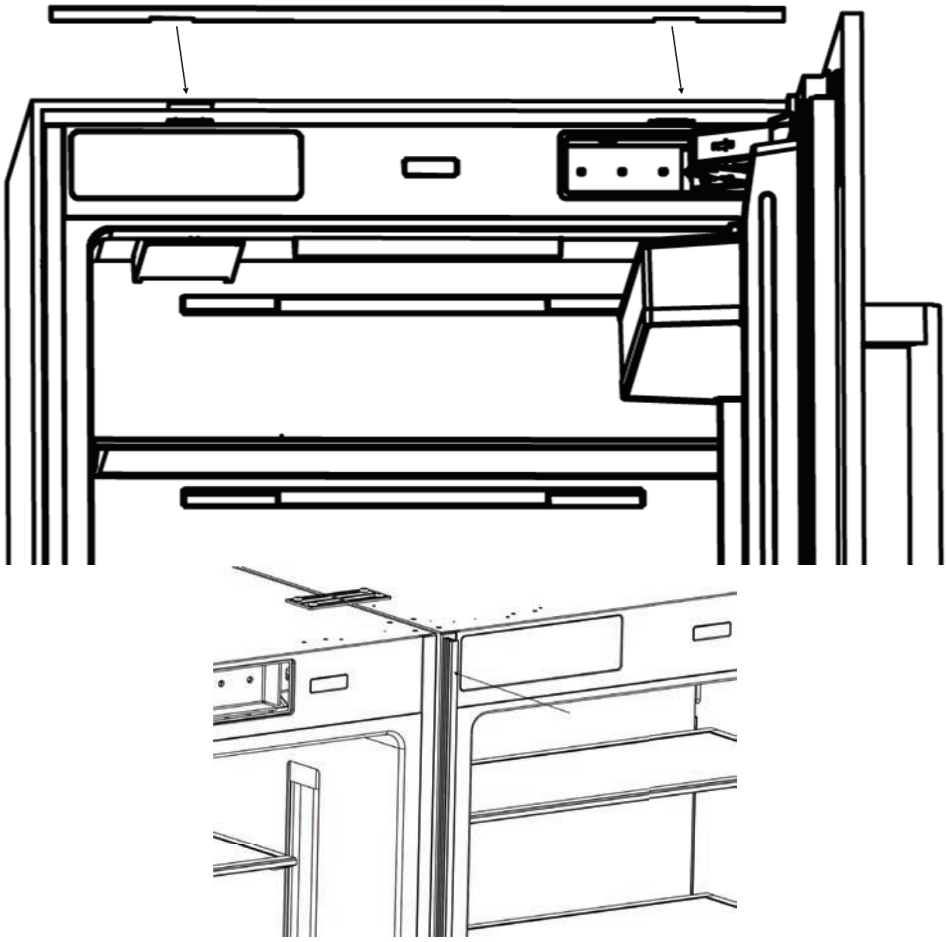

Double Cabin Final Reference





Thank you for being part of the Induction Hardware community.

If you ever need support, our team is always here to help.

www.INDUCTIONHARDWARE.com