SHARP®

OPERATION MANUAL

24" SINGLE CONVECTION WALL OVEN

MODEL : SWA2462SNS

CUSTOMER ASSISTANCE (UNITED STATES ONLY) 2

US CONSUMER LIMITED WARRANTY 3

OVEN SAFETY 4

WARNINGS FOR ELECTRIC INSTALLATION 4

IMPORTANT SAFETY INSTRUCTIONS.....5-6

FOOD SAFETY 6

USDA RECOMMENDED TEMPERATURE 6

PARTS AND FEATURES..... 7

CONTROL PANEL..... 8 - 9

BEFORE OPERATING..... 8

TO SET THE CLOCK..... 8

TO SET THE TIMER..... 8

SELECTING COOK MODE 8

TO PAUSE/CANCEL COOK MODE 8

OVEN TEMPERATURE..... 8

TO CHANGE OVEN TEMPERATURE..... 8

ACTIVE COOKING 9

TO SET DELAY START 9

OVEN LIGHT 9

CONTROL LOCK 9

TOUCHPAD SOUND 9

LANGUAGE 9

OVEN USE ..... 10 - 14

BEFORE USING THE OVEN 10

PREHEATING THE OVEN 10

UTENSILS 10

OVEN RACKS 10

TO REMOVE LADDER RACK 10

TO INSERT OVEN RACK..... 10

COMPONENT COOLING FAN..... 11

OVEN DOOR..... 11

OVEN VENTS..... 11

OVEN CONDENSATION AND TEMPERATURE 11

HIGH ALTITUDE BAKING 11

COOKING WITH TRUE EUROPEAN CONVECTION..... 11

OVEN MODES 12

ADVANTAGES OF CONVECTION COOKING..... 13

COOKING TIPS 13

OVEN PROBE 14

OVEN CARE ..... 15 - 16

STEAM CLEANING 15

GENERAL CLEANING 15

OVEN DOOR REMOVAL 16

REPLACING THE OVEN LIGHT 16

TROUBLESHOOTING..... 17 - 18

BAKING AND ROASTING TROUBLESHOOTING..... 17

OVEN OPERATION TROUBLESHOOTING..... 18

IMPORTANT SAFETY INSTRUCTIONS

Carefully read the important information regarding installation, safety and maintenance.

Keep these instructions for future reference.

24" Single Convection Wall Oven: Model SWA2462SNS

CUSTOMER ASSISTANCE

UNITED STATES ONLY

REGISTER YOUR PRODUCT

Registering your new product is easy and offers benefits that help you get the most out of your Sharp product including:

- ✓ **Convenience**: If you ever need warranty support, your product information is already on file.
- ✓ **Communication**: Stay up to date with important notifications and special offers from SHARP.
- ✓ **Support**: Quickly access support content including Owner's Manuals, FAQ's, How-to Videos, and much more.

3 EASY WAYS TO REGISTER TODAY!

SCAN

Use the camera or QR code scanning application on your mobile device

Scan this QR Code on your mobile device

ONLINE

Visit our sites to learn more about your product at sharpusa.com and sbl.sharpusa.com

Visit http://www.sharpusa.com/register

CALL US

US **800-BE-SHARP**
800-237-4277

Contact a Sharp Advisor on the phone

PRODUCT SUPPORT

If you have questions about the setup or operation of your product, please refer to the corresponding section within this manual.

Additionally, visit https://support.sharpusa.com/s/ to access exclusive content about your product including:

- → FAQ's and How-To Videos
- → Find or Request Service
- → Extended Warranty Options
- → Downloads including the Installation Guide, Spec Sheet, and Owner's Manual

CONTACT US

If at any time you have questions or comments concerning your SHARP product, please contact the SHARP Customer Assistance Center. We are available to assist you through multiple contact methods for your convenience:

EMAIL
Available 24/7
US: sharpusa.com

See the Contact Us section on our sites

CHAT ONLINE

U.S. | https://support.sharpusa.com/s/

CALL US

US **800-BE-SHARP**
800-237-4277

Contact a Sharp Advisor on the phone

SHARP®

US CONSUMER LIMITED WARRANTY

SHARP ELECTRONICS CORPORATION ("Sharp") warrants to the first consumer purchaser ("Purchaser") that this Sharp brand product ("Product"), when shipped in its original container and sold or distributed in the United States by Sharp or an authorized Sharp dealer or reseller, will be free from defective workmanship and materials, and agrees that it will, at its option, either repair the defect or replace the defective Product or part thereof with a new or remanufactured equivalent at no charge to the Purchaser for parts or labor for the period(s) set forth below.

This limited warranty does not apply to any appearance items of the Product nor to the additional excluded item(s) set forth below nor to any Product the exterior of which has been damaged or defaced, which has been subjected to misuse, abnormal service or handling, or which has been altered or modified in design or construction.

In order to enforce the rights under this limited warranty, the Purchaser should follow the steps set forth below and provide proof of purchase to the servicer.

The limited warranty described herein is in addition to whatever implied warranties may be granted to Purchasers by law. ALL IMPLIED WARRANTIES INCLUDING THE WARRANTIES OF MERCHANTABILITY AND FITNESS FOR USE ARE LIMITED TO THE PERIOD(S) FROM THE DATE OF PURCHASE SET FORTH BELOW. Some states do not allow limitations on how long an implied warranty lasts, so the above limitation may not apply to you.

Neither the sales personnel of the seller nor any other person is authorized to make any warranties other than those described herein, or to extend the duration of any warranties beyond the time period described above on behalf of Sharp.

The warranties described herein shall be the sole and exclusive warranties granted by Sharp and shall be the sole and exclusive remedy available to the Purchaser. Correction of defects, in the manner and for the period of time described herein, shall constitute complete fulfillment of all liabilities and responsibilities of Sharp to the Purchaser with respect to the Product, and shall constitute full satisfaction of all claims, whether based on contract, negligence, strict liability or otherwise. In no event shall Sharp be liable, or in any way responsible, for any damages or defects in the Product which were caused by repairs or attempted repairs performed by anyone other than an authorized servicer. Nor shall Sharp be liable or in any way responsible for any incident or consequential economic or property damage. Some states do not allow the exclusion of incidental or consequential damages, so the above exclusion may not apply to you.

THIS LIMITED WARRANTY IS VALID ONLY IN THE FIFTY (50) UNITED STATES, THE DISTRICT OF COLUMBIA AND PUERTO RICO.

Your product model number & description	Model # SWA2462SNS Home Use Wall Oven. (Be sure to have this information available when you need service for your Product.)
Warranty period for this product:	One (1) year parts and labor including in-home service. Product must be accessible to provide service.
Additional item(s) excluded from warranty coverage (if any):	Non-functional accessories, service calls to your home to instruct how to use your Wall Oven appliance, replace or repair house fuses or to correct house wiring, improper commercial use, installation, or maintenance, damage to the product caused by lack of or improper cleaning, delivery, accident, modifications, fire, floods or acts of God.
Where to obtain service:	From a Sharp Authorized Servicer located in the United States. To find the location of the nearest Sharp Authorized Servicer, call Sharp toll free at 1-800-237-4277 (1-800-BE-SHARP).
What to do to obtain service:	In-home service is provided for one year from date of purchase. In-home service can be arranged by calling 1-800-BE-SHARP. Be sure to have Proof of Purchase available.

TO OBTAIN SUPPLY, ACCESSORY OR PRODUCT INFORMATION, CALL 1-800-BE-SHARP or visit www.sharpusa.com. SAVE THE PROOF OF PURCHASE AS IT IS NEEDED SHOULD YOUR OVEN EVER REQUIRE WARRANTY SERVICE.

OVEN SAFETY

YOUR SAFETY AND THE SAFETY OF OTHERS ARE VERY IMPORTANT.

We have provided many important safety messages in this manual and on your appliance. Always read and obey all safety messages.

This is the safety alert symbol.

This symbol alerts you to potential hazards that can kill or hurt you and others. All safety messages will follow the safety alert symbol and either the word "DANGER," "WARNING" or "CAUTION."

⚠ DANGER An immediately hazardous situation, which, if not avoided, may result in death or serious bodily injury.

⚠ WARNING A potentially hazardous situation which, if not avoided, could result in death or serious bodily injury.

⚠ CAUTION A potentially hazardous situation which, if not avoided, may result in moderate or minor injury.

All safety messages will tell you what the potential hazard is, how to reduce the chance of injury and what can happen if the instructions are not followed.

State of California Proposition 65 Warnings:

⚠ WARNING This product contains one or more chemicals known to the State of California to cause cancer.

⚠ WARNING This product contains one or more chemicals known to the State of California to cause birth defects or other reproductive harm.

WARNINGS FOR ELECTRIC INSTALLATION

⚠ WARNING

ELECTRICAL SHOCK HAZARD

Installation and service must be performed by a qualified installer or service agency. The model is powered at 208/240V. Always disconnect the power before servicing this unit. This appliance must be properly grounded. Failure to do so could result in death or serious injury.

240V VS. 208V CONNECTION

Most oven installations will have a 240V connection. If your oven is installed with 208V, the preheat time may be slightly longer than with 240V. The oven is designed to assure the same clean time at 208V.

⚠ WARNING

Remove all packing and foreign materials from the oven. Any material of this sort left inside may melt or burn when the appliance is used. Failure to do so could result in death or fire.

READ ALL INSTRUCTIONS BEFORE USING

⚠WARNING To reduce the risk of fire, electrical shock, injury to persons or damage when using the oven, follow basic precautions, including the following:

PROPER INSTALLATION:

1. This appliance must be properly installed and electrically grounded by a qualified technician. Connect only to properly grounded outlet. See the Installation Manual.
2. This appliance should be serviced only by a qualified service technician. Contact 1-800-BE-SHARP for the nearest service center for examination, repair or adjustment.
3. Do not repair or replace any part of the oven unless specifically recommended. Call 1-800-BE-SHARP for an authorized service center.
4. Do not operate this appliance if it is not working properly or has been damaged until an authorized servicer has examined and repaired it.
5. Install or locate this appliance only in accordance with the Installation Manual.
6. Do not cover or block any openings on this appliance.
7. Use this appliance only for its intended use as described in this manual. Do not use corrosive chemicals, vapors or nonfood products in this appliance. This type of oven is specifically designed to heat or cook. It is not designed for industrial or laboratory use. The use of corrosive chemicals in heating or cleaning will damage the appliance.

TO REDUCE THE RISK OF FIRE IN THE OVEN CAVITY:

1. Do not store flammable materials in or near the oven.
2. Do not use water on a grease fire. Smother fire or use a dry chemical or foam-type extinguisher.
3. Keep a fire extinguisher readily available and highly visible next to any cooking appliance.
4. Do not overcook food. Carefully attend oven if paper, plastic or other combustible materials are placed inside the oven.
5. Do not use the cavity for storage purposes. Do not leave paper products, cooking utensils or food in the cavity when not being used.
6. If materials inside the oven ignite, keep oven door closed. Turn oven off and disconnect the circuit at the circuit breaker box.
7. Do not let grease accumulate in or near the oven, as it could ignite.
8. Ensure the blower fan runs whenever the oven is in operation. If the fan does not operate, do not use the oven. Call 1-800-BE-SHARP for an authorized service center.
9. Never use the oven to warm or heat a room.

PERSONAL SAFETY:

1. Do not allow children to use this appliance unless closely supervised by an adult. Children and pets should not be left alone or unattended in the area where the appliance is in use. Never allow children to sit or stand on any part of the oven.
2. Do not store items of interest to children above the oven. If children should climb onto the appliance to reach these items, they could be seriously injured.
3. For personal safety, wear proper clothing. Loose fitting clothing or garments with hanging sleeves should never be worn while using this appliance.
4. Tie long hair so it doesn't hang loose.
5. Do not touch heating elements or interior surfaces of oven.
6. The heating elements may be hot even though they are dark in color. Interior surfaces of an oven become hot enough to cause burns.
7. During and after use, do not touch or let clothing or other flammable materials contact the heating elements or the interior surfaces of the oven until they have had sufficient time to cool.
8. The trim on the top and sides of the oven door may become hot enough to cause burns.
9. Use care when opening the door. Open the door slightly to let hot air or steam escape before removing or replacing food.
10. Do not heat unopened food containers. Buildup of pressure may cause the container to burst and cause injury.
11. Always place oven racks in desired position while oven is cool. If a rack must be moved while oven is hot, do not let potholder contact the hot heating elements.
12. Use only dry potholders. Moist or damp potholders on hot surfaces may result in burns from steam. Do not let potholder touch hot heating elements. Do not use a towel or other bulky cloth.
13. Do not set any weight on the open oven door.
14. Do not impact or scratch glass on oven door or control panel. Do not use oven if any glass surface is broken. Doing so may result in personal injury, electrical shock or fire.
15. If the surface is cracked, switch off the oven to avoid the possibility of electric shock.

FOOD SAFETY

Cook foods to safe temperatures recommended by the United States Department of Agriculture (USDA). To check internal temperature of foods to determine doneness, insert a temperature probe in a thick or dense area away from fat or bone.

Do not let food sit in the oven more than one hour before or after cooking. Doing so can result in food poisoning or sickness.

USDA RECOMMENDED TEMPERATURE

FOOD	MINIMUM INTERNAL TEMPERATURE
beef, pork, veal and lamb steaks, chops and roasts	145 °F (63 °C) and allow to rest for at least 3 minutes
ground meats	160 °F (71 °C)
ground poultry	165 °F (74 °C)
ham, fresh or smoked (uncooked)	145 °F (63 °C) and allow to rest for at least 3 minutes
ham (fully cooked, to reheat)	165 °F (74 °C)
poultry breasts, whole bird, legs, thighs, wings, giblets and stuffing	165 °F (74 °C)
eggs	160 °F (71 °C)
fish and shellfish	145 °F (63 °C)
leftovers	165 °F (74 °C)
casseroles	165 °F (74 °C)

NOTE: Select, store and handle food carefully to preserve its high quality and minimize the spread of foodborne bacteria.

READ AND SAVE THESE INSTRUCTIONS

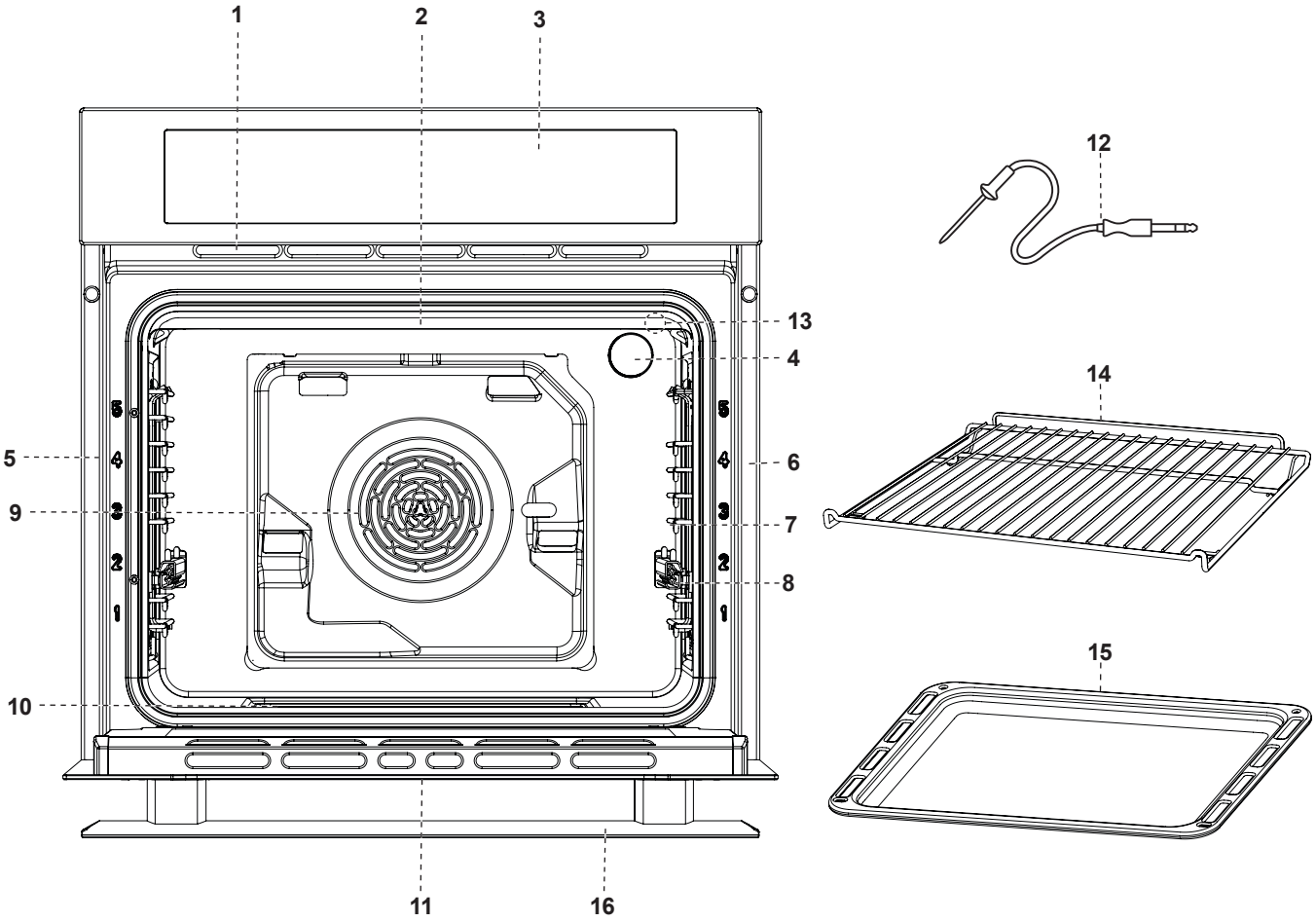

1 Oven Vents
2 Broil Element
3 Control Panel
4 Halogen Bulb
5 Door Gasket
6 Model and Serial # Plate
7 Ladder Rack
8 Glide Rails (attached to Ladder Rack)
9 Convection Fan and Element
10 Bottom Element (not visible)
11 Lower Vents
12 Oven Probe
13 Probe Jack
14 Oven Rack (1 wire rack included)
15 Drip Pan (can be used for broiling)
16 Door Handle

CONTROL PANEL

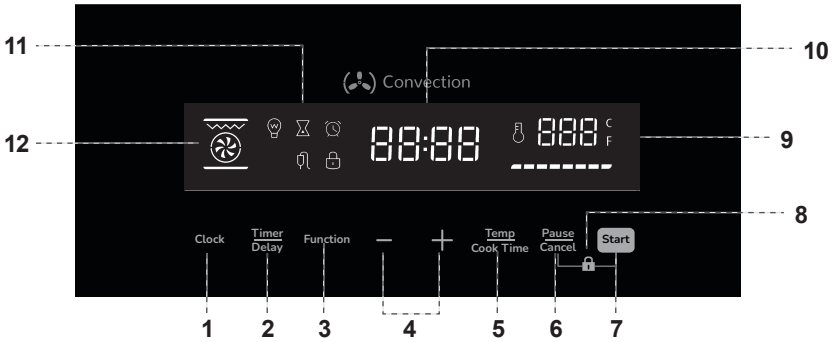

1 Clock Function
2 Timer/Delay Start
3 Oven Modes
4 Temperature, Time, and Clock Adjustment
5 Temperature and Cook Time Selection
6 Pause/Cancel Function
7 Start Function
8 Control Lock
9 Temperature and Active Cooking Display
10 Clock and Timer Display
11 Display Icons
12 Cook Mode Display

BEFORE OPERATING

Before the oven can be used, follow these procedures:

1 Connect power to the oven, and close the door. 12:00 will display.

2 Set the clock.

TO SET THE CLOCK

1 Touch the **Clock** pad. The hour digit will flash.

2 Touch and hold the **-** and **+** pads to select the hour.

3 Touch the **Clock** pad to confirm.

4 Repeat steps 2-3 to select the minutes.

5 Touch the **Clock** pad to confirm.

Note:

- This is a 12 hour clock.
- If the timer is set or a cooking cycle is active, touch the **Clock** pad to check the current time.

TO SET THE TIMER

1 With the oven in standby mode, touch the **Timer/Delay** pad. and "AL" will display.

2 Touch and hold the **-** and **+** pads to enter time.

3 Touch the **Start** pad to confirm.

4 When time has elapsed, beeps will sound. Touch the **Pause/Cancel** pad to stop. Touch the **Pause/Cancel** pad to return to standby mode.

Note:

- Setting the timer does not initiate heat in the oven.
- The timer can be set while a cooking cycle is active or inactive. However, if the **Pause/Cancel** pad is touched to cancel the timer, an active cooking cycle will also be canceled.
- To check the timer during an active cooking cycle, touch the **Timer/Delay** pad.

SELECTING COOK MODE

Select from Bake, Convection Bake, Heated Convection, Broil Hi, Broil Lo, Convection Broil, Convection Roast, Air Fry, Keep Warm, and Defrost.

1 Repeat touch the **Function** pad to select a cook mode. The corresponding icon will display.

2 Touch and hold the **-** and **+** pads to adjust cooking time.

3 Touch the **Temp/Cook Time** pad to switch to temperature. Use the **-** and **+** pads to adjust temperature.

4 Touch the **Start** pad to confirm. Cooking will start.

Note:

- If steps 2 and 3 are skipped, cooking time will be set for 9 hours, and the default temperature will display.
- Temperature cannot be adjusted for Defrost mode.

TO PAUSE/CANCEL COOK MODE

To pause an active cook mode, touch the **Pause/Cancel** pad once. To cancel, touch twice.

OVEN TEMPERATURE

The cooking temperature may be changed before or during preheating and cooking cycles.

TO CHANGE OVEN TEMPERATURE

1 Touch the **Temp/Cook Time** pad.

2 Use the **-** and **+** pads to adjust temperature.

3 Touch the **Start** pad to confirm.

Note:

- If the **Start** pad is not touched within 5 seconds, the oven will not accept the new temperature.
- The oven temperature is measured and displayed in degrees Fahrenheit.

ACTIVE COOKING

During an active cooking cycle, **------** will continuously display below the temperature. This will indicate that the oven is in use.

Note: One audible signal will sound once the preheating has completed. Signaling the end of preheating.

TO SET DELAY START

1 In standby mode, touch the **Timer/Delay** pad twice. and "End" will display.

2 Touch the **-** and **+** pads to set the hour that cooking should end.

3 Touch the **Timer/Delay** pad again.

4 Touch the **-** and **+** pads to set the minute that cooking should end.

5 Touch the **Function** pad to select a cooking function. Then, set cooking time and temperature.

6 Touch the **Start** pad to confirm your selection.

Note:

- Subtract total cooking time from cooking end time to get cooking start time.
- Once Delay Start is set, Cook Time cannot be adjusted.
- To change Cook Time, cancel Delay Start and reset.
- To check the delay setting in standby mode, touch the **Timer/Delay** pad.

OVEN LIGHT

TO TURN LIGHT ON/OFF (ACTIVE COOKING)

The oven light will remain on once cooking starts. It will automatically turn off 10 minutes after the end of a cooking cycle.

1 To turn the light on/off, touch the **Start** pad.

TO TURN LIGHT ON/OFF (STANDBY MODE)

1 To turn the light on, touch the **Function** pad once. will display.

2 Touch the **Start** pad to confirm. The light will turn on.

3 To turn the light off, touch the **Pause/Cancel** pad twice.

CONTROL LOCK

If the Lock is engaged, the appliance can no longer be in use.

TO ACTIVATE THE LOCK

1 Touch the **Pause/Cancel** and **Start** pads at the same time.

2 Hold both pads for 3 seconds. A beep will sound, and will illuminate.

The lock is now activated.

TO DEACTIVATE THE LOCK

1 Touch the **Pause/Cancel** and **Start** pads at the same time.

2 Hold both pads for 3 seconds. A beep will sound.

The lock is now deactivated, and the oven is ready for use.

TOUCHPAD SOUND

Touchpad sound cannot be turned off or adjusted.

LANGUAGE

The default language for the oven is English.

TEMPERATURE UNIT SELECTION (°F / °C)

To switch between Celsius (°C) and Fahrenheit (°F), press and hold the Temperature pad. The display will automatically change to the alternate temperature unit. The selected unit will be used for all temperature settings and displayed temperatures until changed again.

OVEN USE

BEFORE USING THE OVEN

1 Ensure that the oven is correctly installed and remove all packaging materials and accessories.

2 Clean the oven cavity and accessories with soapy water and a soft cloth. Rinse and dry completely.

3 Turn oven on and select Bake mode.

4 Set temperature to 500˚F.

5 Allow the oven to operate for 30 minutes with the door closed and no food in the cavity.

Note: Smoke and odor may occur. This is normal. Open windows for ventilation, and wait for the smell to clear before cooking.

6 Touch the **Pause/Cancel** pad twice to cancel Bake mode.

7 Open the oven door at a slight angle and allow to cool completely.

IMPORTANT: Never set anything (including dishes, cookware, and oven trays) on the bottom of the oven. Never use aluminum foil to cover the oven racks or to line the oven.

PREHEATING THE OVEN

- Preheat the oven when using the Bake or Convection Bake modes.
- Selecting a higher temperature for preheating does not shorten the preheating time.
- Preheating is necessary for good results when baking cakes, cookies, pastry and breads.
- Preheating will help to sear roasts and seal in meat juices.
- Place oven racks in their proper position before preheating.
- The selected cooking temperature is displayed during preheating.

UTENSILS

- Glass baking dishes absorb heat. Reduce oven temperature by 25°F (15°C) when using glass.
- Use pans that produce the desired browning. The type of finish on the pan will affect the amount of browning that will occur.
  - Shiny, smooth metal or light non-stick/anodized pans reflect heat, resulting in lighter, more delicate browning. Use this type for cakes and cookies.
  - Dark, rough or dull pans will absorb heat, resulting in a browner, crisper crust. Use this type for pies.
- Do not cook with the empty broil pan in the oven, as this could affect cooking performance. Store the broil pan outside of the oven.
- Insulated baking pans may increase cooking time.

OVEN RACKS

IMPORTANT: To avoid permanent damage to the porcelain finish, place food or bakeware on an oven rack. Do not force racks into place.

- Do not cover oven racks with aluminum foil.
- The Ladder Rack should be secured to oven walls before turning the oven on.
- Glide Rails are attached to the Ladder Rack and cannot be moved.
- When using together, place the Drip Pan under the Oven Rack.
- Ensure the Drip Pan and Oven Rack are level before turning on the oven.

TO REMOVE LADDER RACK

1 Twist and remove screw. Set aside in a safe location.

2 Lift the Ladder Rack at a slight angle to remove from the oven wall holes.

3 Replace the Ladder Rack by reversing the above steps.

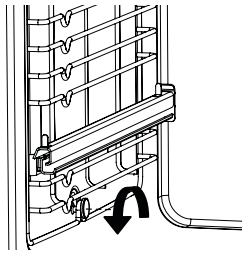

Twist screw counterclockwise to remove

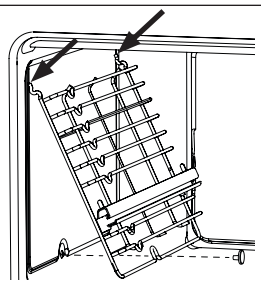

Remove Ladder Rack from oven wall holes

TO INSERT OVEN RACK

1 Hook the Oven Rack onto the Glide Rail peg.

2 Ensure that both sides are level. The Rack should now slide freely.

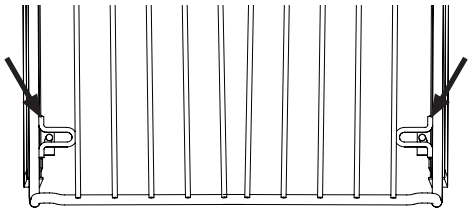

Hook both sides of Rack onto Glide Rail peg

COMPONENT COOLING FAN

The cooling fan activates during any cooking mode to cool inner components and outer door surfaces. This air is exhausted through the vent located above the oven door. It continues to run until components have cooled sufficiently. The cooling fan operates at double speed (or RPM's) whenever the inner components' temperature becomes too high.

OVEN DOOR

To avoid oven door glass breakage:

- Do not close the oven door if the racks are not fully inserted into the oven cavity or if bakeware extends past the front edge of an oven rack.
- Do not set objects on the glass surface of the oven door.

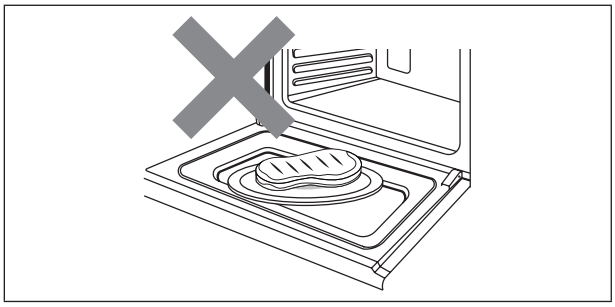

- Do not hit glass surfaces with bakeware or other objects.
- Do not wipe down glass surfaces until the oven has completely cooled.

OVEN VENTS

Blocking or covering the oven vents will cause poor air circulation, affecting cooking, cleaning and cooling results.

- Both the upper and lower oven vents allow fresh air to enter the cooling system.
- The lower oven vent also allows hot air to be expelled from the cooling system.

OVEN CONDENSATION AND TEMPERATURE

- It is normal for a certain amount of moisture to evaporate from the food during any cooking process. The amount of moisture depends on the moisture content of the food.
- The moisture may condense on any surface cooler than the inside of the oven, such as the control panel.
- Your new oven has an electronic temperature sensor to help maintain an accurate temperature. Your previous oven may have had a mechanical thermostat that drifted gradually to a higher temperature. You may need to adjust your favorite recipes when cooking in a new oven.

HIGH ALTITUDE BAKING

When cooking at high altitude, extend cooking times.

COOKING WITH TRUE EUROPEAN CONVECTION

In a conventional oven, the heat sources cycle on and off to maintain an average temperature in the oven cavity.

As the temperature gradually rises and falls, gentle air currents are produced within the oven. This natural convection tends to be inefficient because the currents are irregular and slow.

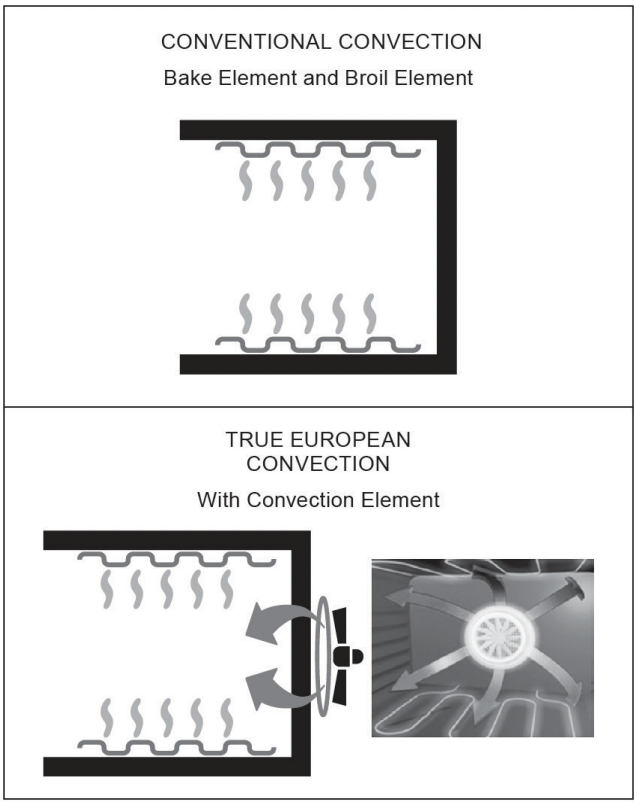

In this True Euro Convection system, the heat is conveyed by a fan that provides continuous circulation of hot air. The system provides state-of-the art engineering and advanced design to create the finest convection oven. An additional heating element is located around the convection fan that distributes heated air through a venting panel in three dimensions: along the sides, the top and the full depth of the oven cavity. This True Euro Convection system aids in maintaining a more even oven temperature throughout the cavity. A standard convection oven has a single fan, without an additional heating element, that circulates the hot air around the food within the cavity.

The circulating air aids in speeding up the baking process and cooks the food more evenly. By controlling the movement of heated air, convection cooking produces evenly browned foods that are crispy outside yet moist inside. Convection cooking works best for breads and pastries. Airleavened foods like angel food cakes, souffles and cream puffs rise higher than in a conventional oven. Meats and poultry stay juicy and tender while the outside is flavorful and crisp.

Using True Euro Convection, foods can be cooked at lower temperatures and with shorter cooking times.

OVEN USE

OVEN MODES

Each mode listed below can be accessed through the **Function** pad and works within the indicated temperature range.

DEFROST

The fan circulates room temperature air around the food, decreasing defrost time approximately by half. This mode is recommended for defrosting all types of food, including delicate foods which do not require heat, such as ice cream cakes, cream or custard desserts, and fruit cakes.

*Temperature cannot be adjusted for Defrost mode.

KEEP WARM: 150˚F-250˚F

Heating is provided through the bottom element. This mode is ideal for keeping cooked foods warm. For best results, do not use Keep Warm for more than 2 hours.

WARNING FOODBORNE ILLNESS HAZARD

Bacteria may grow in food at temperatures below 140 °F (60 °C). Do not attempt to cook food using the Keep Warm mode. This mode is designed to keep cooked foods warm, not to heat cold foods.

BAKE: 150˚F-500˚F

The top and bottom heating elements work together. Baking is cooking with heated air. Both upper and lower elements in the oven are used to heat the air, but no fan is used to circulate the heat. Follow the recipe or convenience food directions for baking temperature, time and rack position. Baking time will vary with the temperature of ingredients and the size, shape and finish of the bakeware. When cooking in Bake mode, only use one rack at a time, otherwise the heat distribution will be uneven. Using the different rack heights available, balance the amount of heat between the top and bottom of the oven.

CONVECTION ROAST: 150˚F-500˚F

The top and bottom heating elements work together with the fan. This combination rapidly heats the oven with large amounts of power, while the fan distributes heat uniformly throughout the oven. Convection Roast is recommended for cooking meats.

BROIL HI: 150˚F-500˚F

The radiant and top heating elements work together. The extremely high and direct temperature of the grill makes it possible to brown the surface of meats and roasts while locking the juices in to keep meat tender. Broil Hi is recommended for dishes that require a high temperature on the surface, such as beef steaks, veal, rib steak, filets, and hamburgers.

*Cook food in Broil Hi with the oven door slightly open.

CONVECTION BROIL: 150˚F-500˚F

The radiant and top heating elements work together with the fan. This combination increases the effectiveness of thermal radiation through forced circulation of air throughout the oven. This helps prevent food from burning on the surface, allowing heat to penetrate the food. Convection Broil is recommended for meat and vegetable kebabs, sausages, ribs, lamb chops, chicken, quail, pork chops and fish steaks.

*Cook food in Convection Broil with the oven door closed.

HEATED CONVECTION: 150˚F-500˚F

The rear heating element and fan work together to distribute delicate heat uniformly throughout the oven. Heated Convection is ideal for baking and cooking delicate food, especially cakes that need to rise and foods that require even coloring.

BROIL LO: 150˚F-450˚F

The radiant heating element switches on and off to maintain temperature. The lower direct temperature makes it possible to cook foods until done without drying out or charring. Broil Lo is recommended for thicker cuts of meat, chicken breasts or vegetables that may dry out or char in high heat. This mode can also be used at the end of cooking to brown foods, such as casseroles with a gratin finish or nachos.

CONVECTION BAKE: 150˚F-500˚F

The bottom and rear heating elements work together with the fan. This combination rapidly heats the oven with large amounts of power, resulting in considerable heat coming prevalently from the bottom of the oven. This mode is ideal for foods requiring high temperatures to cook, like pizzas and large roasts. Only use one rack at a time.

AIR FRY: 150˚F-500˚F

The radiant, top, and bottom heating elements work together with the fan. This combination keeps food crispy outside and tender inside. With this mode, you can cook various dishes simultaneously, as long as their respective cooking temperatures are the same. Air Fry is ideal for appetizers like french fries, chicken tenders, and mozzarella sticks.

AQUA

AQUA is the oven's steam cleaning mode.

1. Add 100ml of water into the oven chamber, and close the door.
2. Repeat touch the **Function** pad to select AQUA mode.
3. Touch the **Start** pad to confirm.

ADVANTAGES OF CONVECTION COOKING

- Baking on multiple racks saves time and provides even cooking results in food
- Prepares whole meals at once with no flavor transfer
- Saves time and energy
- Convection broiling allows for grilling thicker cuts of food

COOKING TIPS

⚠WARNING BURN HAZARD

- Do not touch hot elements inside the oven. Always wear an oven mitt when inserting and removing a meat thermometer or bakeware.

BAKE TIPS

- For best results, bake food on a single rack with at least 1"–1½" (2.5–3 cm) space between utensils and oven walls.
- Use one rack in Bake mode.
- Check for doneness at the minimum time.
- Use metal bakeware, heatproof glass, glass-ceramic, pottery or other utensils suitable for the oven.
- When using heatproof glass, reduce temperature by 25°F (15°C) from recommended temperature.
- Use baking sheets with or without sides or jelly roll pans.
- Dark metal pans or nonstick coatings will cook faster with more browning.
- Insulated bakeware will slightly lengthen the cooking time for most foods.
- Do not use aluminum foil or disposable aluminum trays to line any part of the oven. Foil is an effective insulator, and heat will be trapped beneath it. This will alter the cooking performance and can damage the finish of the oven.
- See "Troubleshooting" on page 17 for Baking problems.

CONVECTION BAKE TIPS

- Reduce recipe baking temperatures by 25°F (15°C) and check for doneness 25% sooner than the recipe states.
- Always preheat oven for Convection Baking.
- For best results, foods should be cooked uncovered in low-sided pans to take advantage of the forced air circulation.
- Use shiny aluminum pans for best results unless otherwise specified.
- Heatproof glass or ceramic can be used. Reduce temperature by another 25°F (15°C) when using heatproof glass dishes for a total reduction of 50°F (30°C).
- For best results, use shiny aluminum pans unless otherwise specified. Dark metal pans can be used, but note that foods may brown faster in dark metal bakeware.
- Most baked items cook well in convection. Do not convert recipes such as custards, quiches, pumpkin pies or cheesecakes, which do not benefit from the convection-heating process. Use the regular Bake mode for these foods.
- All five rack positions can be used when cooking on multiple racks. When cooking on two racks, use positions 1 and 3.
- When baking four cake layers at the same time, stagger pans so that one pan is not directly above another.

CONVECTION CONVERSION

Most recipes are written for conventional cooking, so estimate the correct temperature and cooking time for Convection by reducing the temperature by 25°F and the cooking time by 25%.

For example, a recipe calling for 400°F for 20 minutes is converted to 375°F for 15 minutes.

Note: This is just a guideline, and some recipes may require trial and error to achieve a perfect result. Keep track of your technique as you experiment.

Try recipes for these kinds of dishes:

- Biscuits, cookies and one-bite appetizers
- Coffee cakes and yeast breads
- Cream puffs and popovers
- Casseroles and one-dish meals
- Oven meals, using multiple dishes and racks
- Air-leavened foods, like souffles, meringue, angel food and chiffon cakes

CONVECTION ROAST TIPS

- Do not preheat for Convection Roast.
- Roast in a low-sided, uncovered pan.
- When roasting whole chicken or turkey, tuck wings behind back and loosely tie legs with kitchen string.
- Use the broil pan for roasting uncovered.
- Use a meat thermometer to determine the internal temperature. Double-check temperature by inserting the thermometer into another position.
- Large poultry may also need to be covered with foil (and pan roasted) during a portion of the roasting time to prevent over-browning.
- The minimum safe temperature for stuffing in poultry is 165ºF (74ºC).
- After removing food from the oven, cover loosely with foil for 10 to 15 minutes before carving, if necessary, to increase the final internal temperature by 5° to 10°F (3° to 6°C).
- See "Troubleshooting" on page 17 for Roasting problems.

BROIL TIPS

- Place rack in the required position before turning on the oven.
- Use Broil Hi with the oven door slightly open.
- Use Convection Broil with the oven door closed.
- Preheat for 5 minutes before cooking with Broil Hi or Broil Lo. Do not preheat for Convection Broil.
- Use the broil pan.
- Turn meats halfway through the cooking time.

OVEN PROBE

⚠ CAUTION FOODBORNE ILLNESS HAZARD

- Consuming undercooked food can result in foodborne illness. Use the Oven Probe only in accordance with the following instructions to ensure all portions of the food reach minimum safe cooking temperatures. Consult reputable government sources (USDA, FDA or CDC) for recommended safe minimum cooking temperatures.

⚠WARNING BURN HAZARD

- If the oven has preheated, the Oven Probe and Probe Jack are hot and could cause burns. Use an oven mitt to open the jack and insert probe.

The probe supplied with the appliance can monitor the internal food temperature and turn off the oven when the food reaches a set temperature. Some foods, particularly small or thin items, are not suitable for cooking with the probe due to their size and shape.

Note:

- To avoid damage to the probe, meat should be completely defrosted prior to insertion.
- The probe function only works with the Bake, Broil Hi, Convection Broil, Heated Convection, and Broil Lo modes.
- If the oven light is on, plugging in the probe will deactivate the light. Once cooking starts, the light will reactivate. See "Oven Light" on page 9 for more control options.

TO USE OVEN PROBE

1. Locate the Probe Jack (See "Parts and Features" on page 7). Carefully twist counterclockwise to unscrew the cap, and set aside in a safe location.
2. Insert the Oven Probe into the Probe Jack. A beep will sound. “Prb”and will display.

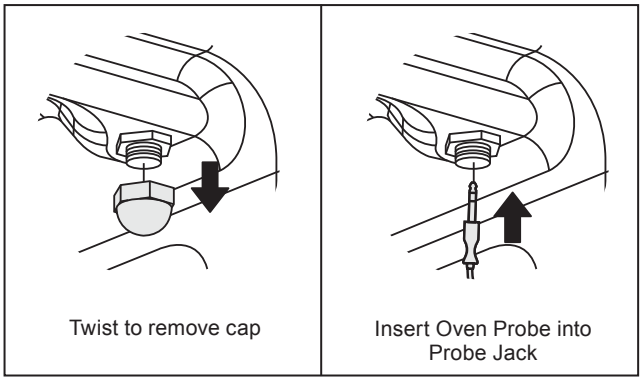

3. Place food into the oven cavity. Insert the probe tip into food. Close the oven door.

   Note: For meats, the probe tip should be inserted into the center of the thickest part of the meat. Ensure that the probe tip is not inserted into fat or touching bone.
4. Use the **Function** pad to select a cook mode.
5. Use the **-** and **+** pads to adjust temperature. Touch the **Start** pad to confirm. Cooking will start.

   Note: When the set targeted internal temperature is reached, beeps will sound and cooking will end automatically.
6. Allow oven to cool completely before removing the probe and replacing the cap.

Note:

- To change the set targeted internal temperature during an active probe cycle, use the **-** and **+** pads. Touch **Start** to confirm new temperature.
- To pause an active probe cycle, touch the **Pause/Cancel** pad once. To cancel, touch twice.
- If the Oven Probe is inserted during an active timer, delay start, or cooking cycle, the active function will be canceled and need to be reset.
- If the set targeted internal temperature is not reached, the maximum operating time is 9 hours.

STEAM CLEANING

This oven is equipped with a steam cleaning mode, which can be accessed through the **Function** pad. For best use instructions, see "Aqua" on page 12.

GENERAL CLEANING

IMPORTANT: Before cleaning, disconnect power at the main power supply (fuse or breaker box). Ensure that the oven is completely cool, and remove oven accessories. Always follow instructions printed on the label of cleaning products.

The entire oven can be safely cleaned with a warm, soapy sponge. After cleaning, rinse and dry. If stubborn soil remains, follow the recommended cleaning methods below.

- Regularly check the oven chamber for food debris.
- Always use the mildest cleaner that will do the job, and avoid using corrosive cleaning products.
- Use clean, soft cloths, sponges or paper towels. Avoid using sharp tools or hard brushes.
- Rub metal finishes in the direction of the grain.
- Remove oven accessories before cleaning.
- Rinse thoroughly. Use a minimum amount of water to avoid dripping into door slots.
- Dry to avoid water marks.

USING THE CLEANING CHARTS

1. Locate the number of the part to be cleaned in the following illustration.
2. Find the part name in the chart.
3. Match the letter with the cleaning method on following chart.

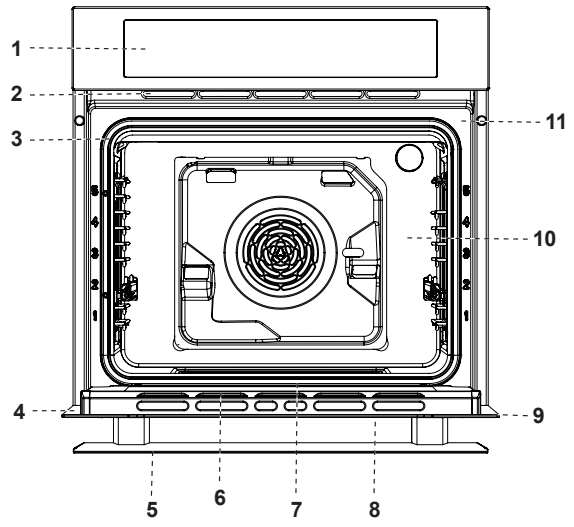

Please refer to the following charts for Cleaning Method.

PART	CLEANING METHOD
1 Control Panel	C & G
2 Oven Vent	E
3 Door Gasket	B
4 Interior Door Frame	D
5 Door Handle	G
6 Door Vent	D
7 Interior Door Window	F
8 Door Front	C & G
9 Door Trim	D
10 Oven Cavity	E
11 Interior Oven Frame	E
*Glide Rails and Oven Rack	A
*Drip Pan	E

PART	CLEANING METHOD
A Chrome Plated	Clean with hot, sudsy water. Rinse thoroughly and dry. Alternatively, gently rub with a mild powder/cream cleaner or a soap-filled, steel wool pad as directed.
B Fiberglass Knit	DO NOT HAND CLEAN GASKET.
C Glass	Spray a mild glass cleaner onto a cloth and wipe clean. Use a non-corrosive oven degreaser to remove grease spatters.
D Painted	Clean with hot, sudsy water. Alternatively, apply a non-corrosive oven degreaser to a clean sponge or paper towel and wipe clean. Avoid using powdered cleaners and steel wool pads.
E Porcelain	Immediately wipe up acidic spills like fruit juice, milk and tomatoes with a dry towel. Do not use a moistened sponge or towel on hot porcelain. When cool, clean with hot, sudsy water, or a mild powder/cream cleaner. Rinse and dry. For stubborn stains, gently use a soap-filled, steel wool pad. With age, porcelain glaze may crack due to exposure from heat and food soil.
F Reflective Glass	Clean with a hot, sudsy sponge or plastic scrubber. Rub stubborn stains with vinegar, ammonia, or a mild glass cleaner. DO NOT USE HARSH ABRASIVES.
G Stainless Steel	Always wipe or rub with the grain. Clean with a soapy sponge and rinse dry, Alternatively, apply a non-corrosive oven degreaser to a clean paper towel and wipe clean. To polish use a protective/polishing stainless steel cleaner and a soft cloth. Remove water spots with a cloth dampened with white vinegar. Use liquid stainless steel cleaner to remove heat discoloration.

OVEN DOOR REMOVAL

For normal oven use, there is no need to remove the oven door. However, should it become necessary to remove the door, follow the instructions in this section.

IMPORTANT:

- Make sure oven is cool and that power to the oven has been turned off before removing the door.
- The oven door is heavy and fragile, and the door front is glass. To avoid oven door glass breakage, use both hands and grasp only the sides of the oven door to remove. Do not lift by the handle.
- Ensure both buckles are securely in place before removing the door.
- Do not force the oven door to open or close.

TO REMOVE THE OVEN DOOR:

1 Open the door completely.

2 Pull the buckles at the door hinges backward.

Note: The buckles may be stiff.

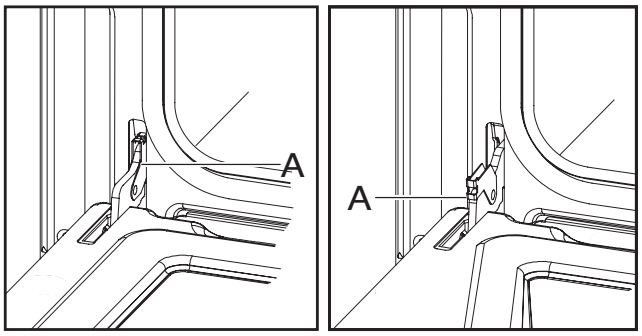

A - Hinge Bracket

3 Grasp the door by its two outer edges.

4 Close the door slowly but not completely, leaving it open about 30 degrees.

5 Pull the door upward first, then toward you, pulling it out of its seat.

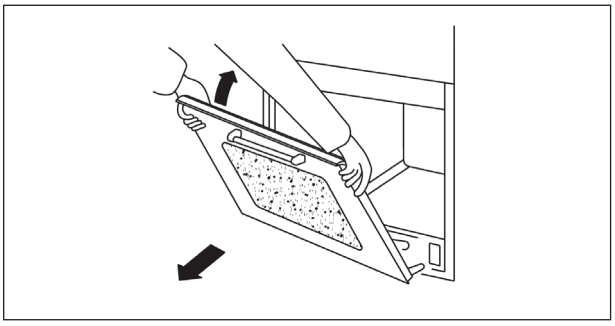

6 Set the door in a safe location.

7 Replace the door by reversing the above steps.

REPLACING THE OVEN LIGHT

⚠ WARNING

ELECTRICAL SHOCK HAZARD

Make sure the oven and lights are cool and power to the oven has been turned off before replacing the light bulb(s).

The glass lens must be in place when using the oven. The lens serves to protect the light bulb from breaking.

The lens is made of glass. Handle carefully to avoid breakage.

Failure to do so could result in death, electric shock, cuts or burns.

1 Disconnect power at the main power supply (fuse or breaker box). Ensure that all internal parts are completely cool before proceeding.

2 Remove the light bulb glass lens by twisting it counter clockwise.

Note: The lens may be stiff.

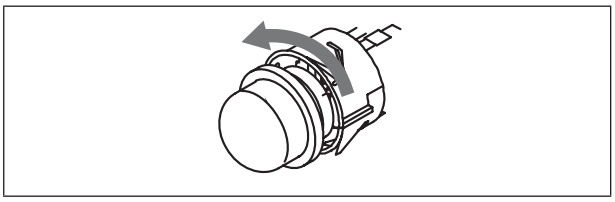

3 Twist to remove the bulb and replace with a new one of the same type. New bulbs must be resistant to 572°F.

- Halogen Bulb
- Voltage: 120V
- Wattage: 25W
- Type: G9

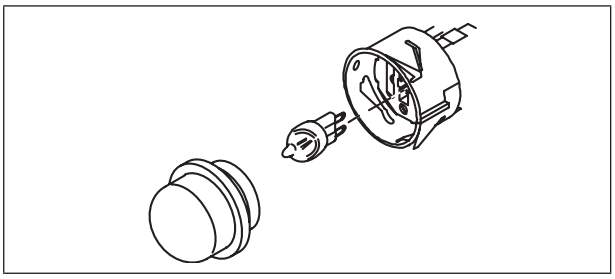

4 Replace the lens.

5 Turn power back on at the main power supply (fuse or breaker box).

If you're having trouble, first troubleshoot with these solutions to avoid an unnecessary service call.

When baking or roasting, poor results may be caused by many reasons besides appliance malfunction.

The best solution to many baking or roasting problems may be replacing old baking utensils that have darkened or warped with age and use. See the chart below for causes to common baking problems.

BAKING AND ROASTING TROUBLESHOOTING

BAKING PROBLEM	POSSIBLE CAUSE
Food browns unevenly	• Oven not preheated • Aluminum foil on oven rack or oven bottom (See "Oven Racks" on page 10) • Pans touching each other or oven walls
Food is too brown on the bottom	• Oven not preheated • Using glass bakeware (See "Utensils" on page 10) • Using dark, dull metal pans (See "Utensils" on page 10) • Incorrect rack position • Pans touching each other or oven walls
Food is dry or shrunken	• Oven temperature too high • Baking time too long • Oven door opened frequently • Pan size too large
Food is baking or roasting too slowly	• Oven temperature too low • Oven not preheated • Oven door opened frequently • Dish tightly sealed with aluminum foil • Pan size too small
Pie crusts do not brown on the bottom or crust is soggy	• Oven temperature too low • Baking time not long enough • Using shiny, steel pans (See "Utensils" on page 10) • Incorrect rack position
Cakes are pale, flat and may not be done inside	• Oven temperature too low • Incorrect baking time • Cake tested too soon • Oven door opened too often • Pan size too large
Cakes are high in the middle and cracked on top	• Oven temperature too high • Baking time too long • Pans touching each other or oven walls • Incorrect rack position • Pan size too small
Pie crust edges are too brown	• Oven temperature too high • Edges of crust too thin

TROUBLESHOOTING

OVEN OPERATION TROUBLESHOOTING

PROBLEM	POSSIBLE CAUSE	SOLUTION
ERROR		In the event of an error, the display flashes and beeps continuously. Disconnect appliance from the power supply and call 1-800-BE-SHARP.
Oven display does not illuminate		Turn power off at the main power supply (fuse or breaker box). Turn power back on. If condition persists, call 1-800-BE-SHARP.
Cooling fan continues to run after oven is turned off	Oven components have not cooled sufficiently	The fan turns off automatically when the electronic components have cooled sufficiently.
Oven is not heating	No power going to oven	Turn power on at the main power supply (fuse or circuit breaker box). If condition persists, call 1-800-BE-SHARP.
	Cook Mode or Temperature not selected	See "Selecting Cook Mode" on page 8.
Oven is not cooking evenly	Incorrect rack position	Refer to recipes and reliable sources for recommended rack positions.
	Temperature not converted for Convection Bake mode	When baking with Convection Bake, always reduce recipe temperature by 25°F (15°C).
Oven light is not working properly	Loose or defective light bulb	Tighten the loose bulb or replace if defective. Touching the bulb with your fingers may cause it to burn out.
Oven light stays on	Oven door not closed completely	Check for obstruction in oven door. Check for a bent hinge.
Cannot remove glass lens on light	Dirty lens	There may be soil built up around the lens. Wipe lens area with a clean, dry towel before attempting to remove.
Clock and Timer are not working properly	No power going to oven	Turn power on at the main power supply (fuse or circuit breaker box). If condition persists, call 1-800-BE-SHARP.
	Clock or Timer not set correctly	See "To Set The Clock" and " To Set The Timer" on page 8.
Excessive moisture	Oven not properly preheated	When using Bake mode, preheat the oven first. The Convection Bake and Convection Roast modes will eliminate any moisture in oven.

SHARP®

SHARP ELECTRONICS CORPORATION • 100 Paragon Drive • Montvale, New Jersey 07645 • USA