User Guide



HP LaserJet MFP M238-M249 printer series

HP company notices

Copyright and license

The information contained herein is subject to change without notice.

All rights reserved. Reproduction, adaptation, or translation of this material is prohibited without prior written permission of HP, except as allowed under the copyright laws. The only warranties for HP products and services are set forth in the express warranty statements accompanying such products and services. Nothing herein should be construed as constituting an additional warranty. HP shall not be liable for technical or editorial errors or omissions contained herein.

© Copyright 2026 HP Development Company, L.P.

Trademark credits

Microsoft® and Windows® are either registered trademarks or trademarks of Microsoft Corporation in the United States and/or other countries.

Mac, macOS, iPadOS, and AirPrint are trademarks of Apple Inc., registered in the U.S. and other countries.

Google Play is a trademark of Google LLC.

ENERGY STAR® and the ENERGY STAR® mark are registered trademarks owned by the U.S. Environmental Protection Agency.

Safety information

Always follow basic safety precautions when using this product to reduce risk of injury from fire or electric shock.

Read and understand all instructions in the documentation that comes with the printer.

Observe all warnings and instructions marked on the product.

Unplug this product from wall outlets before cleaning.

Do not install or use this product near water, or when you are wet.

Install the product securely on a stable surface.

Install the product in a protected location where no one can step on or trip over the line cord, and the line cord cannot be damaged.

If the product does not operate normally, see Solve problems in this guide.

There are no user-serviceable parts inside. Refer servicing to qualified service personnel.

CLASS 1 CONSUMER LASER PRODUCT

EN 50689:2021

Table of contents

1 Get started 1

Set up your printer 1

Printer views 1

Control panel features 3

Use the HP app (iOS, Android, Windows, and macOS) 11

2 Connect your printer 13

Connect to a Wi-Fi network 13

Change Wi-Fi settings 14

Change the connection type 16

3 Load media 18

Load paper 18

Load envelopes 20

Load labels 20

Load document on the scanner glass 21

Load document in the document feeder (sdn/sdw models only) 23

4 Print 24

Print from a Windows computer 24

Print from a Mac computer 24

Print from mobile devices 24

5 Copy and scan 26

Make a copy using the scanner glass (d/dw model) 26

Make a copy using the document feeder (sdn/sdw model) 26

Copy an identification (ID) card 27

Copy or scan from a mobile device 29

Copy or scan from a Windows computer 29

6 Configure the printer using the EWS 30

To access and use the EWS 30

Use Web Services 32

Printer updates 32

Configure IP network settings 32

Assign or change the system password using the EWS 33

Change energy-conservation settings 33

7 Supplies, accessories, and parts 35
Order supplies, accessories, and parts 35
Enable or disable the Cartridge Policy feature 36
Replace the toner cartridge 36
8 Solve problems 39
Interpret control panel light patterns 39
Interpreting error codes 40
Print reports 44
Paper jams and feed issues 45
Restore original factory defaults and settings 56
Cartridge low 56
Printer does not pick up paper or misfeeds 57
Improve print quality 59
Resolve print quality problems 62
Improve copy and scan image quality 69
Solve Wi-Fi network problems 70
Solve Ethernet connection problems 73
HP support 73
Appendix A Printer specifications 75
Technical specifications 75
System requirements 75
Printer dimensions 75
Power consumption, electrical specifications, and acoustic emissions 76
Operating-environment range 77
Warning icons 77
Laser Warning 78
Appendix B Service and support 79
Limited Warranty Statement for HP Print Cartridges, Imaging Drums, and Imaging Units for use with HP LaserJet Printers, HP Laser Printers and Samsung Branded Laser Printers 79
HP limited warranty statement 79
Reminder on the use of non-HP supplies 92
HP anti-counterfeit website 92
Data stored on the toner cartridge 92
End User License Agreement 93
Customer self-repair warranty service 97
Customer support 98
Appendix C Environmental product stewardship program 99

Protecting the environment 99
Ozone production 99
Power consumption 99
Toner consumption 99
Paper use 100
Plastics 100
HP LaserJet print supplies 100
Paper 100
Material restrictions 100
Disposal of waste equipment by users (EU and India) 100
Electronic hardware recycling 101
Hardware recycling information (Brazil) 101
Chemical substances 101
Product Power Data per European Union Commission Regulation 2023/826 101
SEPA Ecolabel User Information (China) 102
The regulation of the implementation on China energy label for printer and copier 102
Restriction of Hazardous Substances statement (India) 102
WEEE (Turkey) 102
The Table of Hazardous Substances/Elements and their Content (China) 103
Material Safety Data Sheet (MSDS) 103
EPEAT 103
Declaration of the Presence Condition of the Restricted Substances Marking (Taiwan) 104
For more information 105
Appendix D Regulatory information 106
Battery statements 106
Regulatory statements 107
Wireless statements 111

1 Get started

Learn about printer parts, control panel features, and other printer functionalities.

Set up your printer

Your printer's online setup guide provides step-by-step instructions and helpful animations tailored to your printer model.

The guide can help you:

- Complete hardware setup tasks
- Load paper and install supplies
- Connect to a Wi-Fi network
- Install the recommended printer software
- Troubleshoot common setup issues

Visit start.hp.com and enter your product model to get started.

You can also use the HP app to set up your printer.

Printer views

Printer parts and their descriptions.

Front view (d/dw model)

Printer parts on the front.

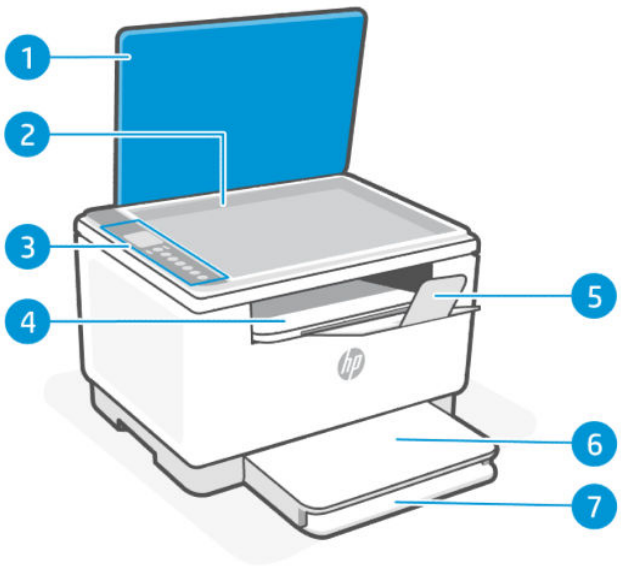

Front view (d/dw model)

Feature	Description
1	Scanner lid
2	Scanner glass
3	Control panel
4	Output tray / cartridge access door
5	Output tray extender
6	Tray cover
7	Paper tray

Front view (sdn/sdw model)

Printer parts on the front.

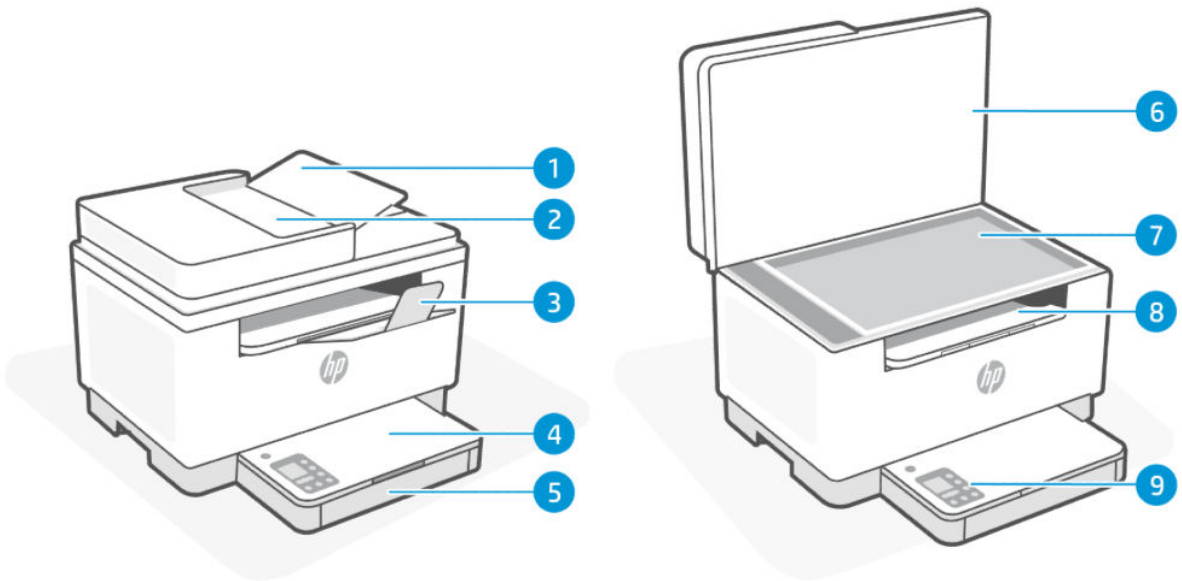

Front view (sdn/sdw model)

Feature	Description
1	Document feeder cover
2	Document feeder
3	Output tray extender
4	Tray cover
5	Paper tray
6	Scanner lid
7	Scanner glass
8	Output tray / cartridge access door

Front view (sdn/sdw model) (continued)

Feature	Description
9	Control panel

Rear view (d/dw/sdn/sdw models)

Printer parts on the rear.

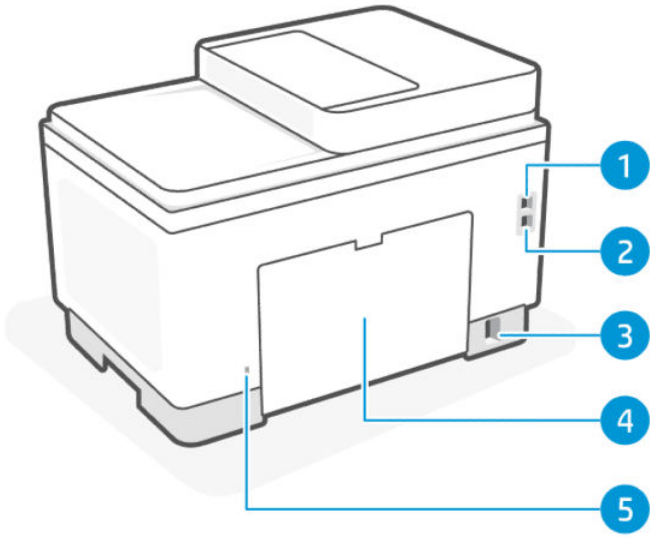

Rear view (d/dw/sdn/sdw models)

Feature	Description
1	USB port
2	Ethernet port (some models only)
3	Power connection
4	Rear access door
5	Security slot

Control panel features

The control panel provides direct interaction, including lights to indicate status, errors, and more.

Control panel view (d/dw model)

Features and functions of the printer control panel.

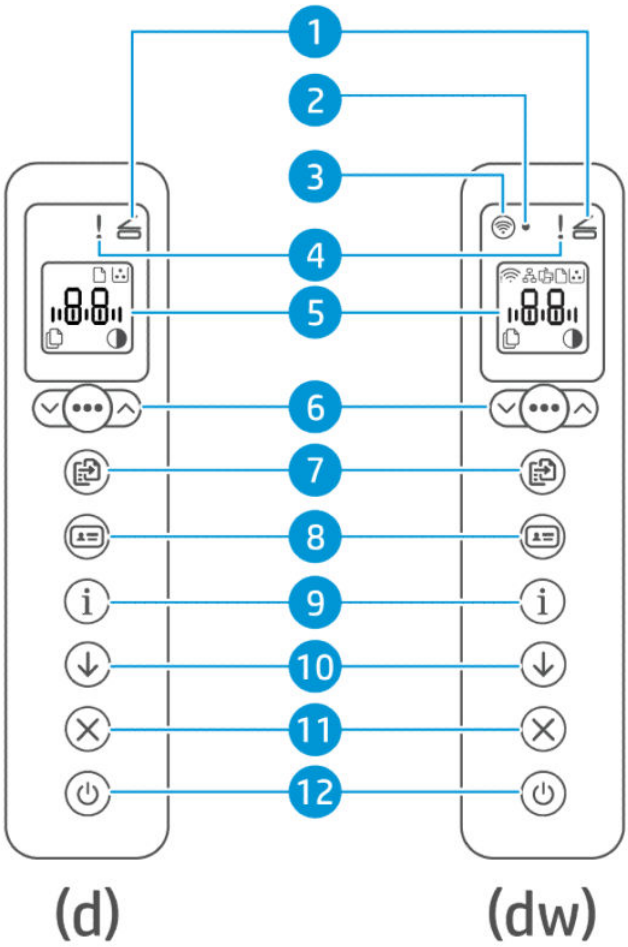

Control panel view (d/dw model)

Feature	Buttons/Lights	Description
1	Open Lid light	This light flashes during the **ID Card Copy** mode. Open the lid and turn the original document over to copy the second side.
2	Wi-Fi light (Wi-Fi models only)	A small LED light to indicate the status of the Wi-Fi connection. This light blinks when connecting to Wi-Fi and is on when connected.
3	Wi-Fi button (Wi-Fi models only)	Press the **Wi-Fi** button to turn wireless capability on or off. See Wi-Fi status of the printer (dw models only). Press and hold the **Wi-Fi** button to set up wireless using WPS.
4	Attention light	The Attention light is on or blinks when the printer requires user attention. For more information, see Interpret control panel light patterns.

Control panel view (d/dw model) (continued)

Feature	Buttons/Lights	Description
5	Control panel display	An LCD display that shows errors, number of copies, and the status of other printer functions. For a list of printer display codes, see Interpreting error codes.
6	Copy options 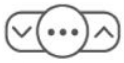	Use the **Menu** button and the **Up/Down** buttons as follows: 1. Press the **Up/Down** buttons to adjust the number of copies to print. 2. Press the **Menu** button to move to the next option (the Contrast setting icon). 3. Press the **Up/Down** buttons to adjust the contrast.
7	Copy button/light 	Press this button to start a copy job.
8	ID Card Copy button/light 	Press this button to start the process of copying a two-sided identification card or similar document. See Copy an identification (ID) card.
9	Information button/light 	Press the **Information** button to print a summary of printer settings and status. If a printer error occurs, the **Information** button lights up or blinks. Press the button, check and follow the instructions on the printed page to resolve the error. If the **Information** button blinks while setting up wireless, press this button to complete authorization.
10	Resume button/light 	If the **Resume** light is on, the printer needs attention. Press the **Resume** button to acknowledge and resume printing.
11	Cancel button/light 	Press the **Cancel** button to cancel a job.
12	Power button/light 	Press the **Power** button to turn the printer on or off.

Control panel view (sdn/sdw model)

Features and functions of the printer control panel.

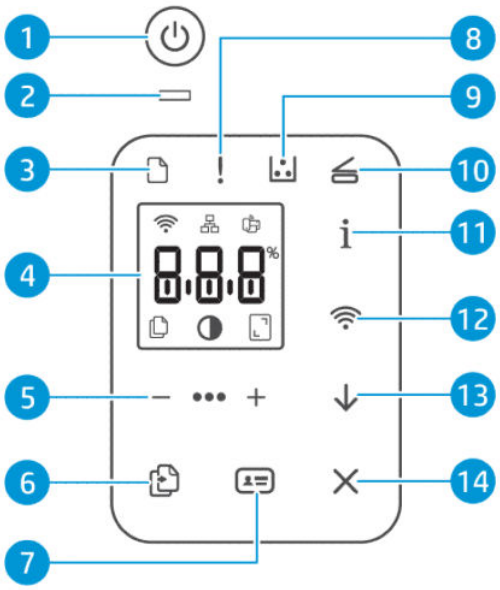

Control panel view (sdn/sdw model)

Feature	Buttons/lights	Description
1	Power button	Press the **Power** button to turn the printer on or off.
2	Status light	When the **Status** light is on, the printer is ready to print. When the light is blinking, the printer is starting up, receiving print data, or canceling a job. When the light dims, the printer is in Sleep Mode (a low-power state).
3	Paper light	The **Paper** light blinks when the paper tray is out of paper, or when there is a paper error.
4	Control panel display	An LCD display that shows errors, number of copies, and the status of other printer functions. For a list of printer display codes, see Interpreting error codes.

Control panel view (sdn/sdw model) (continued)

Feature	Buttons/lights	Description
5	Copy Options 	Use the **Menu** button and the **Minus/Plus** buttons / as follows: • To adjust the number of copies to print, press the **Minus/Plus** buttons / buttons. • Press the **Menu** button to move to the next option, (the Contrast setting icon) . • To select the Contrast setting, press the **Minus/Plus** buttons / buttons. • Press the **Menu** button to move to the next option, (the Reduce/Enlarge setting icon) . • To adjust the size, press the **Minus/Plus** buttons / buttons.
6	Copy button/light 	Press this button to start a copy job.
7	ID Card copy button/light 	Press this button to start the process of copying a two-sided identification card or similar document. See Copy an identification (ID) card.
8	Attention light	The **Attention** light is on or blinks when the printer requires user attention. For more information, see Interpret control panel light patterns.
9	Cartridge light 	When the **Cartridge** light is on, it indicates that the cartridge is low on toner. If the **Cartridge** light blinks, you can continue printing until the **Attention** light blinks or the status light turns amber. If the **Cartridge** light blinks and the **Attention** light is on or the status bar shows amber, a problem with the cartridge has occurred. Reinstall or replace the cartridge to continue printing. See Replace the toner cartridge.
10	Open Lid light 	This light flashes during the ID Card copy mode. Open the lid and turn the original document over to copy the second side.

Control panel view (sdn/sdw model) (continued)

Feature	Buttons/lights	Description
11	Information button/light	Press the **Information** button to print a summary of printer settings and status. If a printer error occurs, the **Information** button lights up or blinks. Press the button, check and follow the instructions on the printed page to resolve the error. If the **Information** button blinks while setting up wireless, press this button to complete authorization.
12	Wi-Fi button/light (Wi-Fi models only)	Press the **Wi-Fi** button to turn wireless capability on or off. See Wi-Fi status of the printer (sdw models only). Press and hold the **Wi-Fi** button to set up wireless using WPS.
13	Resume button/light	If the **Resume** light is on, the printer needs attention. Press the **Resume** button to acknowledge and resume printing.
14	Cancel button/light	Press the **Cancel** button to cancel a job.

Control panel display features (d/dw model)

Features and functions of the control panel display.

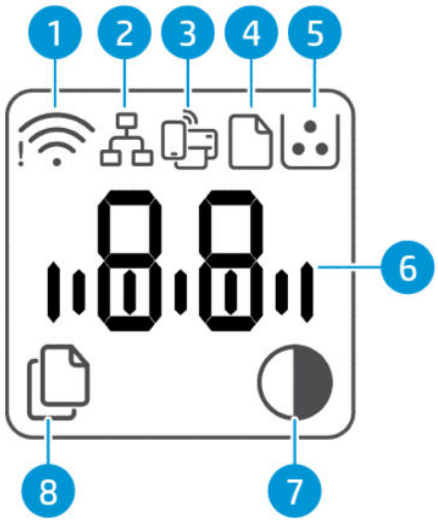

Control panel display features (d/dw models)

Feature	Icon/Button	Description
1	Wi-Fi icon (Wi-Fi models only) 	If the **Wi-Fi** icon is lit, then there is a stable Wi-Fi connection. If an exclamation icon appears beside the **Wi-Fi** icon, see Wi-Fi status of the printer (dw models only).
2	Ethernet icon 	This indicates the printer is connected through a wired (Ethernet) connection.
3	Wi-Fi Direct icon (Wi-Fi model only) 	The **Wi-Fi Direct** icon indicates that Wi-Fi Direct is on.
4	Paper icon 	Blinks when the paper tray is out of paper, or when there is a paper error.
5	Cartridge icon 	Indicates that the cartridge is low on toner. If the **Cartridge** icon blinks, you can continue printing until the **Attention** light blinks. If the **Cartridge** icon blinks and the **Attention** light is on, a problem with the cartridge has occurred. Reinstall or replace the cartridge to continue printing. See Replace the toner cartridge.
6	Character display 	Depending on the current mode, the characters display the following: • Number of copies being printed • Copy Settings (contrast or the reduce/enlarge setting) • Animation to show that the device is busy • Error and status codes For a list of printer display codes, see Interpreting error codes.
7	Lighter/Darker (contrast) icon 	When the printer is in contrast mode, the control panel displays the **Lighter/Darker** icon and a bar graphic representing the current level of contrast. Use the arrow keys to make your copy lighter or darker. See Control panel modes.
8	Number of Copies icon 	When the printer is in number of copies mode, the control panel displays the number of copies currently selected for printing. Use the arrow keys adjust the copy count. See Control panel modes.

Control panel display features (sdn/sdw model)

Features and functions of the control panel display.

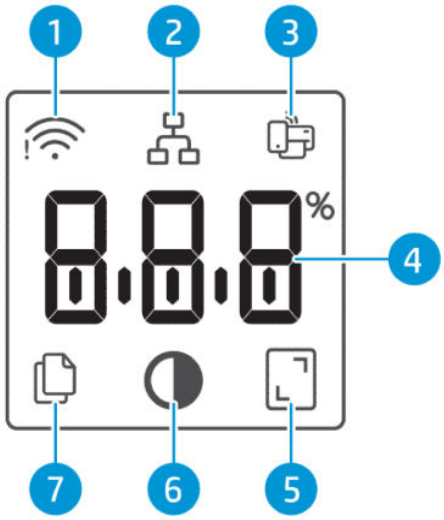

Control panel display features (sdn/sdw models)

Feature	Icon/Button	Description
1	Wi-Fi icon (Wi-Fi models only)	If the **Wi-Fi** icon is lit, then there is a stable wireless connection. If an exclamation icon appears beside the wireless icon, see Wi-Fi status of the printer (sdw models only).
2	Ethernet icon	This indicates the printer is connected through a wired (Ethernet) connection.
3	Wi-Fi Direct icon	The **Wi-Fi Direct** icon indicates that **Wi-Fi Direct** is on.
4	Character display	The characters display the following: • Number of copies being printed • Copy settings (contrast or the reduce/enlarge setting) • Animation to show that the device is busy • Error and status codes For a list of printer display codes, see Interpreting error codes.
5	Reduce/Enlarge (scale) icon	When displayed, the character display shows the current scaling factor (in percent).
6	Lighter/Darker (contrast) icon	When displayed, the character display shows the contrast setting (as a bar graphic).

Control panel display features (sdn/sdw models) (continued)

Feature	Icon/Button	Description
7	Number of Copies icon 	When displayed, the character display shows the number of copies currently selected for printing.

Control panel modes

The appearance of the control panel display changes depending on the mode that the printer is in. Three common display modes are shown below.

Mode

Control panel modes	Description
Copy mode 	The display shows the **Number of Copies** icon  and the number of copies currently selected.
Contrast mode 	The display shows the **Lighter/Darker** icon  and the current setting.
Scale mode (some models only) 	The display shows the **Reduce/Enlarge** icon  and the current scale (as a percentage of the original size).

Use the HP app (iOS, Android, Windows, and macOS)

The HP app can help you perform these common printer tasks from a mobile device and computer:

- Set up and connect your printer.
- Print and scan documents and photos.
- Share documents through email and other applications.
- Manage printer settings, check printer status, print reports, and order supplies.

Follow these steps to install the HP app.

1. Visit hp.com/start/install to download and install the HP app on your device.
2. Open the HP app.
3. If prompted, create or sign in to an HP account and register the printer.
4. Connect the printer.

   See Connect your printer.

NOTE:

- The HP app is supported on mobile devices and computers running on some versions of iOS, Android, Windows, and macOS.
- It is only available in some languages and only supports some file formats. Some features are only available on certain printers or models.
- You can download the HP app from your device's app store.
- Visit the HP support website at support.hp.com for more information.

2 Connect your printer

Learn about different ways to connect your printer.

Connect to a Wi-Fi network

Learn about different ways to connect to your Wi-Fi network.

Connect to a Wi-Fi network using the HP app

Install and use the HP app on your computer or mobile device to set up or connect the printer to your Wi-Fi network.

See Use the HP app (iOS, Android, Windows, and macOS).

1. Make sure your computer or mobile device is connected to your Wi-Fi network. On your device, turn on Bluetooth and location services.

   NOTE: The HP app uses Bluetooth for printer setup. It does not support printing using Bluetooth.

2. If your printer Wi-Fi was previously turned off, press the **Wi-Fi** button to turn it on.

3. Make sure the printer is in Wi-Fi setup mode. The **Wi-Fi** light should blink blue.

   If not, reset the printer network settings. See To restore network settings to default settings.

4. Open the software on your computer or mobile device.

   If prompted, create or sign in to an HP account.

5. Select the option to add a printer, and then follow the on-screen instructions to add or connect the printer.

   - If prompted for the printer password, enter the default PIN from the PIN label inside the printer. See Things to note when accessing the EWS.
   - When the printer is connected successfully, the **Wi-Fi** light stops blinking and remains lit.

Connect to a Wi-Fi network using Wi-Fi Protected Setup (WPS)

This Wi-Fi setup method can be used if your router has a WPS button.

1. Make sure your router and printer are near each other.

2. If your printer is in sleep mode, press the **Cancel** button to wake up the printer. Then press and hold the **Wi-Fi** button for at least 3 seconds to start WPS. The **Wi-Fi** light blinks.

3. Press the WPS button on your router within 2 minutes. When the printer is connected successfully, the Wi-Fi light stops blinking and remains lit.

NOTE: After connecting the printer wirelessly, visit hp.com/start/install to download and install the HP app on your device.

4. Open the HP app on your device.

   If prompted, create or sign in to an HP account and register the printer.

5. In the HP app, add the printer, and then follow the on-screen instructions to add or connect the printer.

Connect to an Ethernet network

Connect your printer to a computer using an Ethernet network, and then use the HP app to set up the printer.

NOTE: The Wi-Fi connection is automatically disabled when you connect the Ethernet cable.

1. Connect your computer to the router.
2. Connect your printer to the router using an Ethernet cable.
3. Open the HP app on your computer.

   If prompted, create or sign in to an HP account and register the printer.

4. In the HP app, add the printer, and then follow the on-screen instructions to add or connect the printer.

Connect using a USB cable

Connect your printer to a computer using a USB cable, and then use the HP app to set up the printer.

1. Connect the printer and computer using a USB cable.
2. Open the HP app on your computer.

   If prompted, create or sign in to an HP account and register the printer.

3. In the HP app, add the printer, and then follow the on-screen instructions to add or connect the printer.

Change Wi-Fi settings

You can set up and manage the wireless connection for your printer. This includes printing information about network settings, turning the wireless capability function on or off, and restoring wireless settings.

Wi-Fi status of the printer (dw models only)

View the status of the printer Wi-Fi connection from the printer control panel.

Wi-Fi status of the printer (dw models only)

Wi-Fi button	Wi-Fi light	Wi-Fi Status
Off	No light on the control panel.	The printer is not connected to the network. To turn on Wi-Fi, press the **Wi-Fi** button . To connect the printer to a Wi-Fi network, see Connect to a Wi-Fi network using the HP app or Connect to a Wi-Fi network using Wi-Fi Protected Setup (WPS) or To restore network settings to default settings.
On	Solid blue light is lit on the control panel.	The printer is connected to the network.
On	The blue light blinks in sync with the Wi-Fi icon.	The printer is trying to connect to a Wi-Fi network.
On	The blue light blinks in sync with the Wi-Fi icon.	The printer is unable to connect to a Wi-Fi network. If the printer is unable to connect to a Wi-Fi network, the **Wi-Fi** icon blinks and Er/61 appears on the control panel. Press the **Cancel** button to continue and then try connecting the printer to the Wi-Fi network again. See Connect to a Wi-Fi network using Wi-Fi Protected Setup (WPS). If the problem persists, try connecting using the HP app. See Connect to a Wi-Fi network using the HP app.

Wi-Fi status of the printer (sdw models only)

Wi-Fi status of the printer (sdw models only)

Wi-Fi icon	Wi-Fi Status
Off	The printer is not connected to the network. To turn on Wi-Fi, press the **Wi-Fi** button . To connect the printer to a Wi-Fi network, see Connect to a Wi-Fi network using the HP app or Connect to a Wi-Fi network using Wi-Fi Protected Setup (WPS) or To restore network settings to default settings.
On	The printer is connected to a Wi-Fi network.
On (signal bar cycles)	The printer is trying to connect to a Wi-Fi network.

Wi-Fi status of the printer (sdw models only) (continued)

Wi-Fi icon	Wi-Fi Status
 On (signal bar cycles)	The printer is unable to connect to a Wi-Fi network. If the printer is unable to connect to a Wi-Fi network, the **Wi-Fi** icon blinks and **Er/61** appears on the control panel. Press the **Cancel** button to continue and then try connecting the printer to the Wi-Fi network again. See Connect to a Wi-Fi network using Wi-Fi Protected Setup (WPS). If the problem persists, try connecting using the HP app. See Connect to a Wi-Fi network using the HP app.

Turn on or off the Wi-Fi capabilities of the printer

The blue Wi-Fi light on the printer control panel is lit when the wireless capability of the printer is on.

Press the **Wi-Fi** button to turn on or off the printer wireless capabilities.

To restore network settings to default settings

Learn how to reset the printer's Wi-Fi settings and connect it to a Wi-Fi network.

1. Press and hold the **Information** button for 5 seconds, and then release the button. All control panel buttons will light up.
2. Press and hold the **Wi-Fi** button and the **Cancel** button at the same time for 5 seconds and release the button. The printer restarts and, depending on your printer model, the **Status** light pulses purple or the **Wi-Fi** button starts blinking blue. This indicates that the printer is in Wi-Fi setup mode. Press the **Power** button to turn off the printer, wait for 30 seconds, then press the **Power** button to turn on the printer. You can now set up a Wi-Fi connection between the printer and your device.

NOTE: Use the HP app to connect the printer to Wi-Fi.

Change the connection type

If you have already connected your printer, you can change the connection from USB to Wi-Fi or from Wi-Fi to USB.

USB or Ethernet to Wi-Fi

Disconnect the USB or Ethernet cable from the printer and connect the printer to your Wi-Fi network.

See Connect to a Wi-Fi network.

Wi-Fi to USB or Ethernet

Follow the steps to change the printer connection from Wi-Fi to USB / Ethernet.

1. Connect the printer and computer using a USB or Ethernet cable.
2. Open the HP app on your computer.

   If prompted, create or sign in to an HP account and register the printer.
3. In the HP app, add the printer, and then follow the on-screen instructions to add or connect the printer.

3 Load media

Learn how to load paper and change media settings.

Load paper

This topic describes how to load paper into the paper tray.

NOTE: To avoid paper jams:

- Never add or remove paper from the paper tray during printing.
- Before loading the paper tray, remove all of the paper from the paper tray and straighten the stack.
- Use paper that is not wrinkled, folded, or damaged.
- Do not mix paper sizes. For example, do not place A5 paper over A4 size paper.
- Ensure the paper guides are snug against the paper stack to prevent skewed paper feeding.

To load paper

1. Lift the tray cover and remove paper from the paper tray, if any.

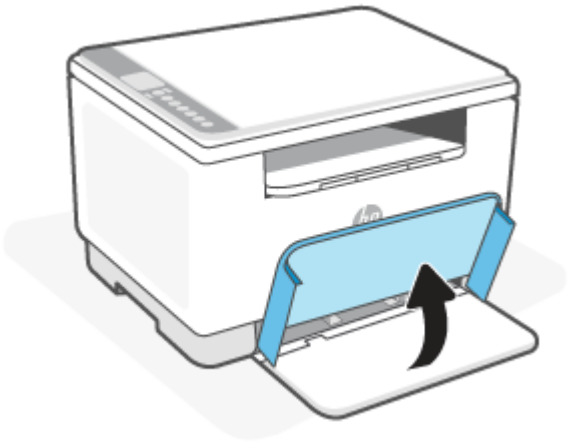

TIP: To load Legal-size paper, lift the printer cover and, if necessary, leave it open. Depending on your printer model, you might also need to lower the tray door.

2. Slide the paper guides to the edges of the paper tray.

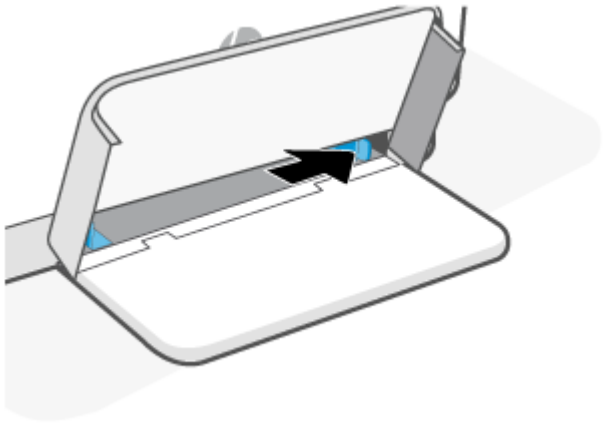

3. Insert the stack of paper so the top edge goes into the tray first and the side to be printed on faces up.

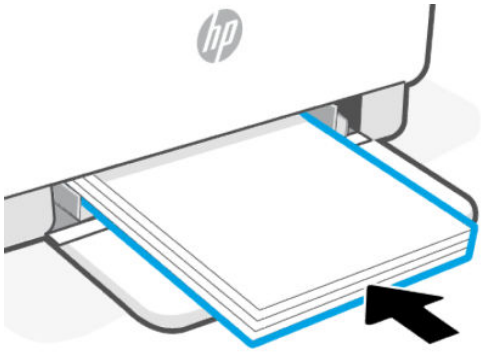

4. Slide the paper guides until they touch the edges of the paper.

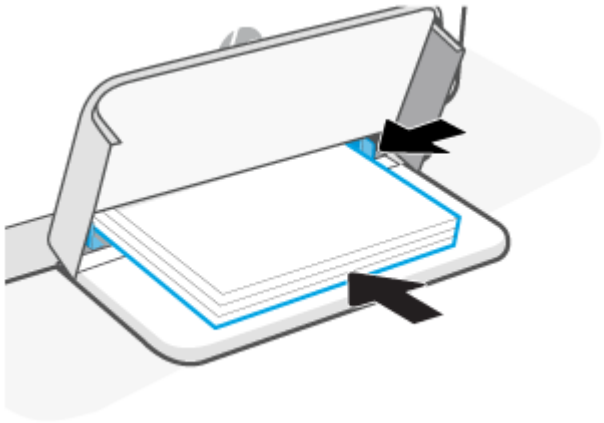

5. Lower the tray cover and extend the output tray.

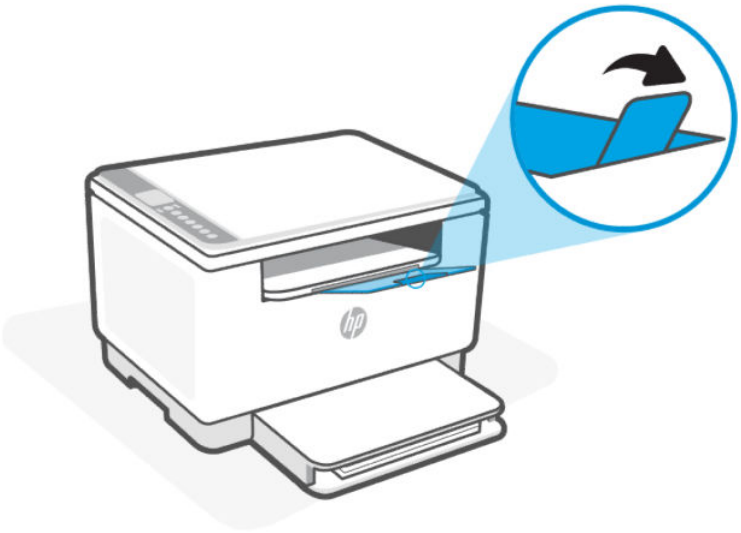

Load envelopes

This topic describes how to load envelopes into the paper tray.

For a list of supported sizes and tray capacity, visit support.hp.com, select your location and language, find your printer, select **Product Information**, and then select **Product specifications**.

For more information about product specific support links, see HP support.

To load envelopes

1. Remove all paper from the paper tray.
2. Insert the envelope into the middle of the paper tray. Place the top edge of the envelope toward the back of the tray and the side to be printed on should face up.
3. Slide the paper guides until they touch the edges of the envelope.

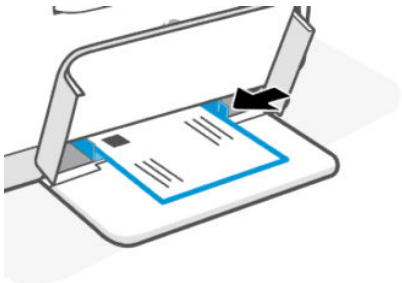

4. Lower the tray cover and extend the output tray.

Load labels

This topic describes how to load labels into the paper tray.

For a list of supported sizes and tray capacity, visit support.hp.com, select your location and language, find your printer, select **Product Information**, and then select **Product specifications**.

For more information about product specific support links, see HP support.

To load labels

1. Remove all paper from the paper tray.
2. Insert the sheet of labels into the middle of the paper tray. Place the top edge of the sheet toward the back of the tray and the side to be printed on should face up.
3. Slide the paper guides until they touch the edges of the media.

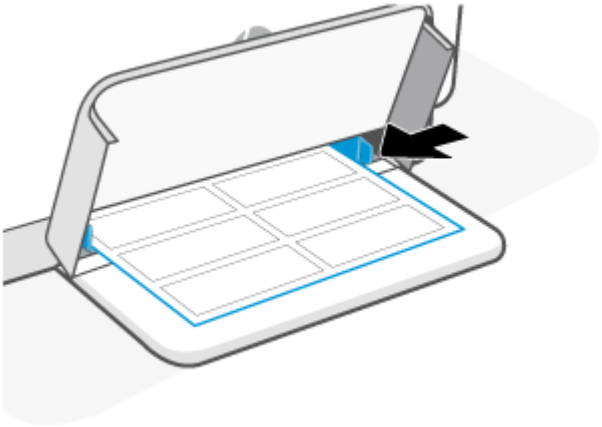

4. Lower the tray cover and extend the output tray.

Load document on the scanner glass

This topic describes how to load the document on the scanner glass.

You can copy or scan original documents by loading them on the scanner glass.

NOTE:

- The scanner might not work correctly if the scanner glass and lid backing are not clean.
- Remove all pages from the document feeder tray before lifting the lid on the printer.

To load document on the scanner glass

1. Lift the scanner lid.

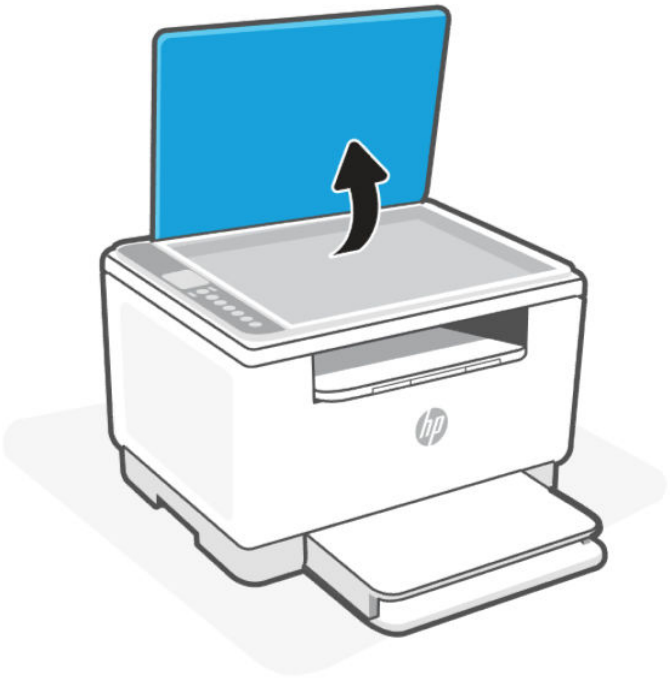

2. Load your document print-side down and align it with the marking on the rear left corner of the glass.

TIP: Use the engraved guides at the corner of the scanner glass to position the page.

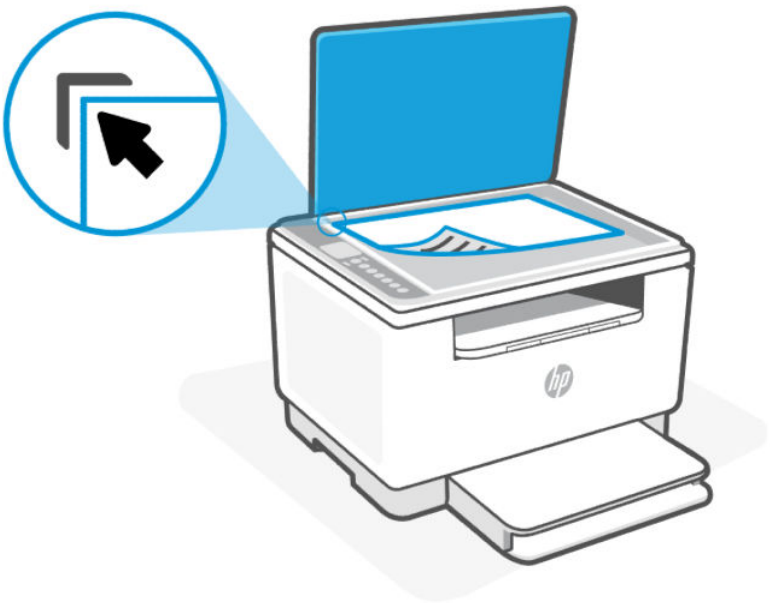

3. Close the lid.

Load document in the document feeder (sdn/sdw models only)

This topic describes how to load the document in the document feeder.

You can copy or scan a document by placing it in the document feeder.

CAUTION: Do not load photos in the document feeder, this might cause damage to your photos. Use only paper that is supported by the document feeder.

NOTE: Some features, such as the **Fit to Page** copy feature, do not work when you load your pages in the document feeder. For those features to work, load your pages on the scanner glass.

To load a document in the document feeder

1. Load your pages print-side up into the document feeder.

   a. If you are loading an original document printed in portrait orientation, place the pages so that the top edge of the document goes in first. If you are loading a document printed in landscape orientation, place the pages so that the left edge of the document goes in first.

   b. Slide the paper into the document feeder until you hear a tone.

TIP: For more help on loading pages in the document feeder, refer to the diagram on the document feeder tray.

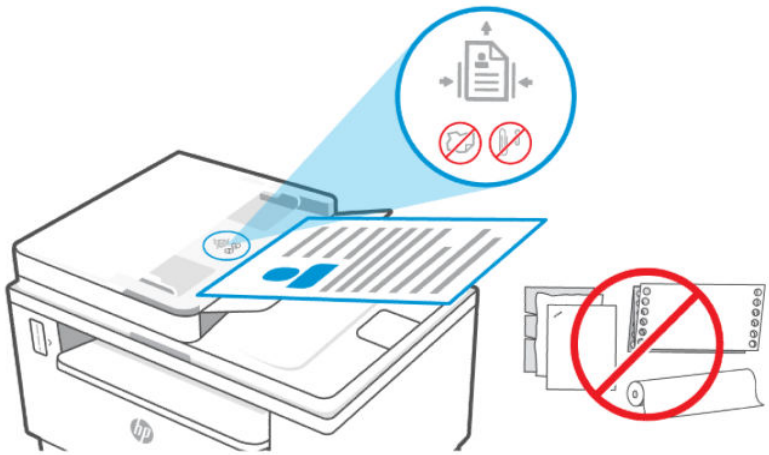

2. Slide the paper-width guides inward until they stop at the left and right edges of the paper.

4 Print

Learn how to print from your computer or mobile device.

Install the HP app on your computer or mobile device to print, scan, and manage your printer

NOTE: If printing multiple copies fails, try printing just one copy instead.

Print from a Windows computer

You can print from the File menu of most apps.

Make sure you have installed the HP app. See Use the HP app (iOS, Android, Windows, and macOS).

1. Open the document you wish to print.
2. From the **File** menu in your software program, select the **Print** option.

   NOTE: Make sure your printer is selected from the list of available printers.
3. Select the button that opens the **Properties** dialog box.

   Depending on your software application, this button might be called **Properties**, **Options**, **Setup**, or **Preferences**.
4. Change any print settings if needed, and select **OK**.
5. Select **Print** or **OK** to print.

Print from a Mac computer

Use the Print command from any open file.

1. If you are printing for the first time, complete the following steps.
   a. Open **System Settings**, and select **Printers & Scanners**.
   b. Select the **Add** button/icon +, select the printer from the printer list, and then select **Add**.
2. Open the document you want to print and use the **Print** command (Command + P).

   Make sure your printer is selected from the list of available printers.
3. Change any print settings if needed.
4. Select **Print** to print.

Print from mobile devices

You can print documents and photos from your mobile devices using the HP app, AirPrint, or the HP Print Service Plugin.

- **HP software**: Visit hp.com/mobileprinting for more information on mobile printing.
- **iOS:** Devices running iOS 4.2 or later have AirPrint pre-installed.
- **Android:** Download the HP Print Service Plugin (supported by most Android devices) from the Google Play Store and enable it on your device.

Print while connected to same Wi-Fi network

You can print documents and photos from your mobile device when the device is on the same Wi-Fi network as the printer.

Visit www.hp.com/go/mobileprinting for more information on mobile printing.

NOTE: Make sure your mobile device and printer are connected to the same Wi-Fi network. See Connect to a Wi-Fi network using Wi-Fi Protected Setup (WPS).

Print without connecting to same Wi-Fi network (Wi-Fi Direct)

With Wi-Fi Direct, you can directly connect your computer or mobile device to the printer and print wirelessly—without connecting your computer or mobile device to an existing wireless network.

Visit www.hp.com/go/wifidirectprinting for more information on Wi-Fi Direct.

NOTE:

- Make sure Wi-Fi Direct on your printer is turned on. If Wi-Fi Direct is turned on, the Wi-Fi Direct icon appears on the control panel display.
- Up to 5 computers and mobile devices can connect to the printer using the Wi-Fi Direct connection.

To turn Wi-Fi Direct on or off from the control panel:

1. Press and hold the **Information** button for 3 seconds and then release the button.

   All control panel buttons will light up.

2. Press the **Resume** button and the **Wi-Fi** button at the same time.

TIP: Press the **Information** button to print a report to check the Wi-Fi Direct status and password.

5 Copy and scan

This section describes how to use the copy and scan features.

Make a copy using the scanner glass (d/dw model)

Follow these steps to make a copy from the scanner glass:

1. Place the document on the scanner glass and align it using the indicators on the printer.
2. Press the **Menu** button ••• to choose any of the following copy settings.
   - Use the **Up** button ^ and the **Down** button v to adjust the number of copies to print.
   - Select the Lighter/Darker ◑ setting, and then use the **Up** button ^ and the **Down** button v to adjust the darkness setting for the current copy job.
3. Press the **Copy** button ⎘ to start copying.

TIP: If your device has a camera, you can use the HP app to scan a printed document or photo with the device camera. You can then use the HP app to edit, save, print, or share the image.

Make a copy using the document feeder (sdn/sdw model)

Follow these steps to make a copy from the scanner glass:

1. Load the document on the scanner glass according to the indicators on the printer.
2. Press the **Menu** button ••• to choose any of the following copy settings.
   - Use the **Minus** button − and the **Plus** button + to adjust the number of copies to print.
   - Select the Lighter/Darker ◑ setting, and then use the **Minus** button − and the **Plus** button + to adjust the darkness setting for the current copy job.
3. Press the **Copy** button ⎘ to start copying.

TIP: If your device has a camera, you can use the HP app to scan a printed document or photo with the device camera. You can then use the HP app to edit, save, print, or share the image.

Copy an identification (ID) card

Use the ID Copy feature to copy both sides of the identification card, or other small-size documents, onto the same side of one sheet of paper. The printer prints both images at the same time.

1. Open the scanner lid and place the ID card on the top half of the scanner glass as shown.



2. Close the scanner lid, and press the **ID Copy** button to start copying.

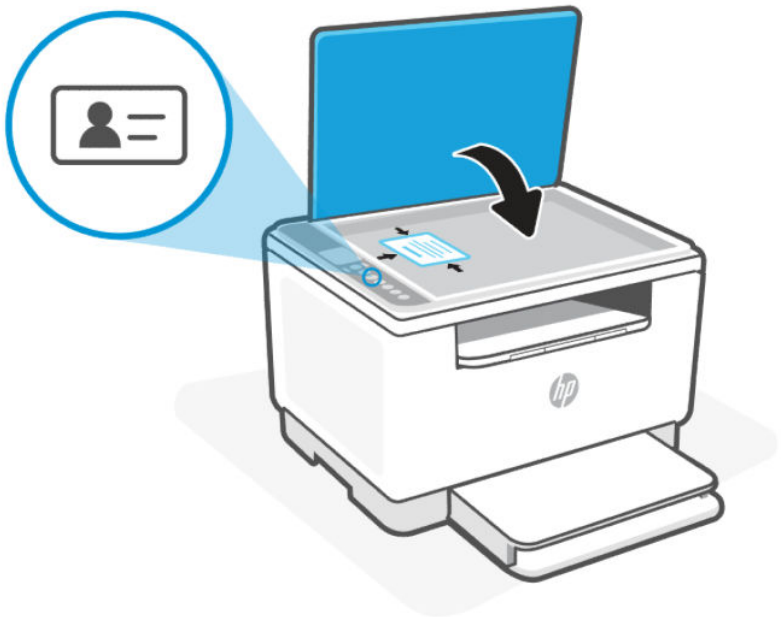

When the copying is done, the Open Lid light lights up and "P2" appears on the display.

3. Open the scanner lid, flip over the ID card and place on the same area of the scanner glass.



4. Close the scanner lid and press the **Resume** button to start scanning the second side and print.

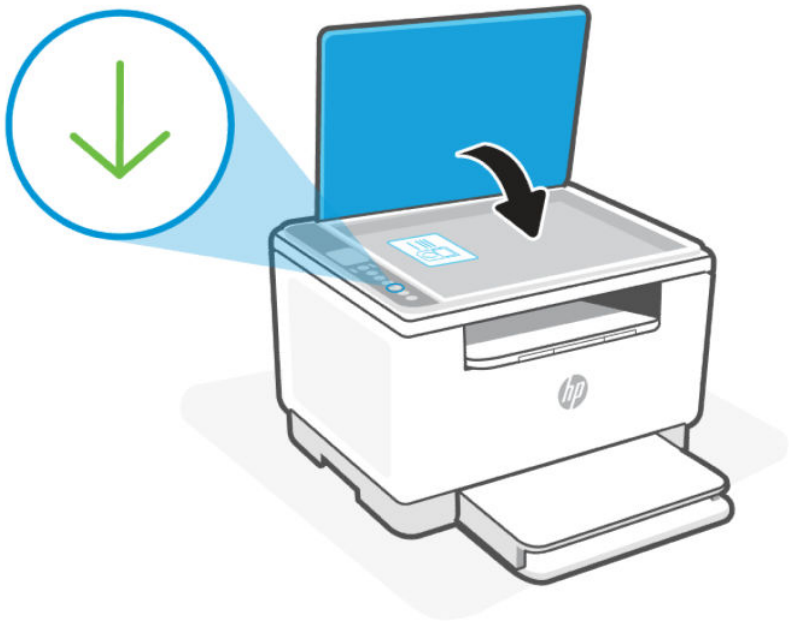

Copy or scan from a mobile device

If your mobile device has a camera, you can use the HP app to copy or scan a printed document or photo.

TIP: You can also use the HP app to edit, save, print, or share the copied or scanned image.

1. Open the HP app on your mobile device.
2. Select the **Plus** icon + or the **Add Printer** option.
3. Select **Copy**, **Camera Scan**, or **Printer Scan**.
4. Place a document or photo in front of the camera, select a size option to help identify the size of the original, and then select the round button at the bottom of the screen to take a picture.

   TIP: For best results, adjust the camera position to place the original within the provided frame on the preview screen.

5. Specify other settings, and follow the on-screen instructions to complete the copy or scan.

Copy or scan from a Windows computer

Make sure you have the software installed HP app on your computer.

1. Place the original print-side down on the scanner glass or print-side up in the document feeder (some printer models).
2. Open the HP app. See Use the HP app (iOS, Android, Windows, and macOS).
3. Select **Scan**, and then select **Scan a Document or Photo**.
4. Select the type of scan you want, and then select **Scan**.

   If you are scanning to a file, choose a file format for your scan.

NOTE:

- Select the **More** link in the top-right corner of the Scan dialog to review and modify settings for a scan.
- If **Show Viewer After Scan** is selected, you can make adjustments to the scanned image in the preview screen.

6 Configure the printer using the EWS

Use the EWS to manage printing functions from your computer.

- View printer status information
- Check the information and status of the printing supplies
- Receive notification of printer and supplies events
- View and change the network and the printer settings

To access and use the EWS

You can open the EWS using one of the following:

- HP app
- IP address
- Wi-Fi Direct connection

Things to note when accessing the EWS

If the web browser displays a message indicating that the website is unsafe, select the option to continue.

- Accessing the website will not harm your device.
- If prompted, enter the default user name and password of the printer.
  - **Username:** admin
  - **Password:** Open the cartridge access door, and look for the PIN number on the label inside the printer.

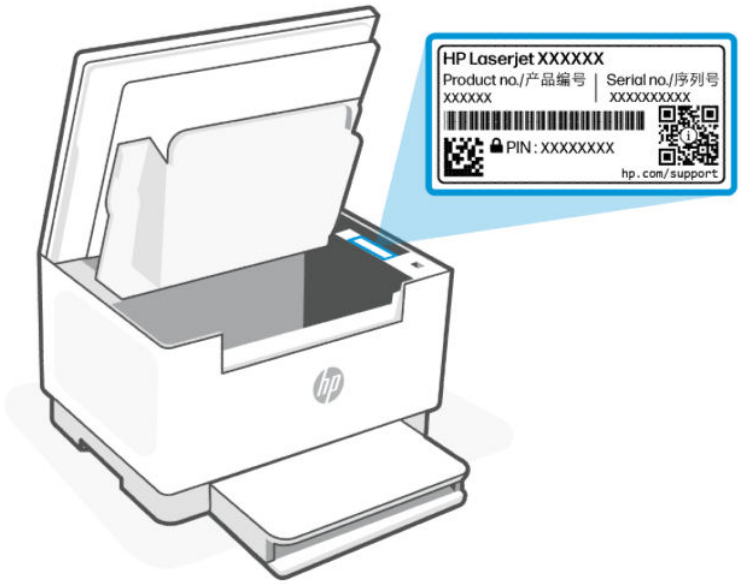

- Depending on how the printer is connected, some features in the EWS might not be available.
- The EWS is not accessible beyond the network firewall.

The HP app (iOS, Android, Windows, and macOS)

Follow these steps:

1. Open the HP app on your computer or mobile device. If prompted, create or sign in to an HP account.
2. Select the printer image to access the printer settings.
3. Select **Advanced Settings**.

   This opens the printer home page or embedded web server (EWS).

NOTE: If prompted for the printer password, enter the default PIN from the PIN label inside the printer. See Things to note when accessing the EWS.

IP address (Wi-Fi or Ethernet connection)

1. Find out the IP address. Press the **Information** button on the printer to print an information page with the printer IP address.
2. Open a web browser and enter the IP address or hostname..

IP address (Wi-Fi Direct connection)

Perform the following steps:

1. Make sure your device and the printer are connected using Wi-Fi Direct. See Print without connecting to same Wi-Fi network (Wi-Fi Direct).

2. Open a web browser, type the following IP address or hostname of the printer in the address bar, and then select **Enter**.

   IP Address: 192.168.223.1

Use Web Services

The printer offers innovative, cloud-based solutions, such as print anywhere.

For more information, visit the HP Smart website http://www.hpsmart.com.

NOTE: To use these cloud-based solutions, the printer must be connected to the internet. Unless otherwise agreed, HP can modify or cancel these cloud-based solution offerings at its discretion.

Remove Web Services

Follow the steps to remove the Web Services.

1. Open the EWS. See To access and use the EWS.
2. Select the **Web Services** tab.
3. From the left menu, select **Remove Web Services**.
4. In the Web Services Settings area, select **Remove Web Services** to remove this feature.

Printer updates

HP offers periodic printer updates to improve printer performance, fix issues, or protect your printer against potential security threats.

When setting up the printer through the HP app, it prompts to update the printer to the latest firmware. Follow the on-screen instructions and update the printer.

You can change the setting to manually check for updates from the embedded web server (EWS). In the EWS, select the **Tools** tab, select **Printer Updates** and **Firmware Updates** from the left menu, and select the desired options.

Configure IP network settings

Use the following sections to configure the printer network settings.

View or change network settings

Use the EWS to view or change IP configuration settings.

1. Open the EWS. See To access and use the EWS.
2. Select the **Network** tab to obtain network information. Change settings as needed.

Manually configure IPv4 TCP/IP parameters

Use the EWS to manually set an IPv4 address, subnet mask, and default gateway.

1. Open the EWS. See To access and use the EWS.

2. Select the **Network** tab.
3. From the left menu, select **Wired (802.3)**, and then select **IPv4 Configuration**.
4. In the IPv4 Configuration area, select the **Manual IP** radio button.
5. Select **Apply** to save the changes.

Assign or change the system password using the EWS

Assign an administrator password for access to the printer and EWS so that unauthorized users cannot change the printer settings.

1. Open the EWS. See To access and use the EWS.
2. Select the **Settings** tab.
3. From the left menu, select **Security**, and then select **Password Settings**.
4. In the **Current Password** field, enter the existing password.
5. Enter the password in the **Password** field.
6. Re-enter the password in the **Confirm Password** field.
7. Select **Apply** to save the changes.

NOTE: Make note of the password and store it in a safe place.

Change energy-conservation settings

The printer includes several economy features to conserve energy and supplies.

Set the Sleep After Inactivity setting

Use the EWS to set the amount of idle time before the printer enters sleep mode.

Complete the following procedure to change the Sleep After Inactivity setting:

1. Open the EWS. See To access and use the EWS.
2. Select the **Settings** tab.
3. From the left menu, select **Power Settings**, and then select **Sleep Mode**.
4. In the Sleep Mode area, under **Sleep After Inactivity**, select the desired time radio button.
5. Select **Apply** to save the changes.

Set the Shutdown After setting and configure the printer to use 1 watt or less of power

Use the EWS to set the amount of time before the printer shuts down.

NOTE: After the printer shuts down, the power consumption is 1 watt or less.

Complete the following procedure to change the Shut Down After setting:

1. Open the EWS. See To access and use the EWS.

2. Select the **Settings** tab.
3. From the left menu, select **Power Settings**, and then select **Shutdown Mode**.
4. In the Shutdown Mode area, under **Shutdown After**, select the desired time.
5. Select **Apply** to save the changes.

Set the Disable Shutdown setting

Use the EWS to delay the printer shutdown when the Power button is pressed.

1. Open the EWS. See To access and use the EWS.
2. Select the **Settings** tab.
3. From the left menu, select **Power Settings**, and then select **Shutdown Mode**.
4. In the Shutdown Mode area, under **Shutdown After**, select the Disable shutdown when ports are active option.
5. Select **Apply** to save the changes.

NOTE: When this option is selected, the printer will not shut down unless all ports are inactive. An active network link will prevent the printer from shutting down.

7 Supplies, accessories, and parts

This section describes how to order supplies and manage accessories.

Order supplies, accessories, and parts

This section describes how to order supplies and manage accessories.

Order

Order

Order supplies	Support sites
Order supplies and paper	www.hp.com/go/suresupply
Order Original HP parts or accessories	www.hp.com/buy/parts
Order through service or support providers	Contact an HP-authorized service or support provider.

Supplies and accessories

- A: Standard-capacity black toner cartridge.
- X: High-capacity black toner cartridge.

List of supplies and accessories

Cartridge name/number	Part number	Countries in use
HP 184A Black Original LaserJet Toner Cartridge	W1840A	AMS/ RoAPJ
HP 184X Black Original LaserJet Toner Cartridge	W1840X	AMS/ RoAPJ
W1840XC High Yield Black Contract Original LaserJet Toner Cartridge	W1840XC	AMS/ RoAPJ
HP 185A Black Original LaserJet Toner Cartridge	W1850A	EMEA
HP 185X Black Original LaserJet Toner Cartridge	W1850X	EMEA
W1850XC High Yield Black Contract Original LaserJet Toner Cartridge	W1850XC	EMEA
HP 179A Black Original LaserJet Toner Cartridge	W1790A	AMS/ RoAPJ
HP 180A Black Original LaserJet Toner Cartridge	W1800A	EMEA

*The product is regionalized for the locations listed above. However, nothing herein must be deemed as an authorization from HP to import products into the European Economic Area, Switzerland, and the UK from any country outside that region.

Enable or disable the Cartridge Policy feature

The Cartridge Policy feature can be enabled or disabled using the printer's embedded web server (EWS).

NOTE: Enabling or disabling this feature might require entering an administrator password.

1. Open the EWS. See To access and use the EWS.
2. Select the **Settings** tab.
3. From the left menu, select **Supplies**, and then select **Supply Settings**
4. From the Cartridge Policy drop-down list, select **Off** to disable the feature or select **Authorized HP** to enable the feature.

   If the feature is enabled, only Original HP toner cartridges can be used with the printer.
5. Select **Apply** to save the changes.

Replace the toner cartridge

Learn how to replace the toner cartridge.

Cartridge information

Continue printing with the current cartridge until redistributing the toner no longer yields acceptable print quality. To redistribute the toner, remove the toner cartridge from the printer and gently rock the cartridge back and forth about its horizontal axis. For graphical representation, see cartridge replacement instructions. Reinsert the toner cartridge into the printer and close the cover.

Remove and replace the toner cartridge

Replace the toner cartridge with a new, Original HP toner cartridge when toner levels become too low and the cartridge no longer yields acceptable print quality.

NOTE: When a toner cartridge approaches the end of its useful life, redistributing the toner in the cartridge might improve print quality and enable you to continue printing. To redistribute the toner in the cartridge, remove the toner cartridge from the printer, gently rock the cartridge back and forth along its horizontal axis, and then replace it in the printer.

1. Make sure the printer is off.

2. Open the cartridge access door, and then remove the used toner cartridge from the printer.

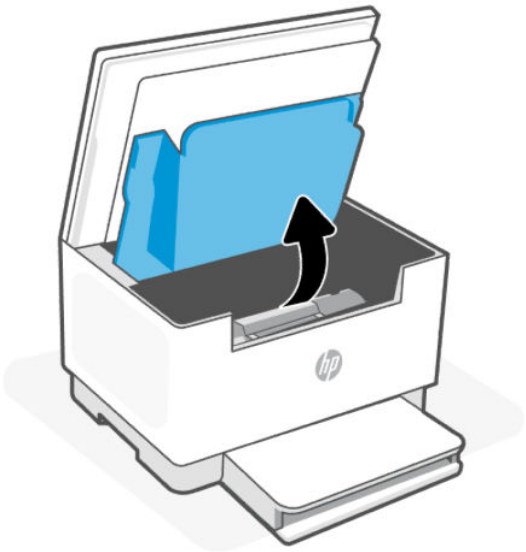

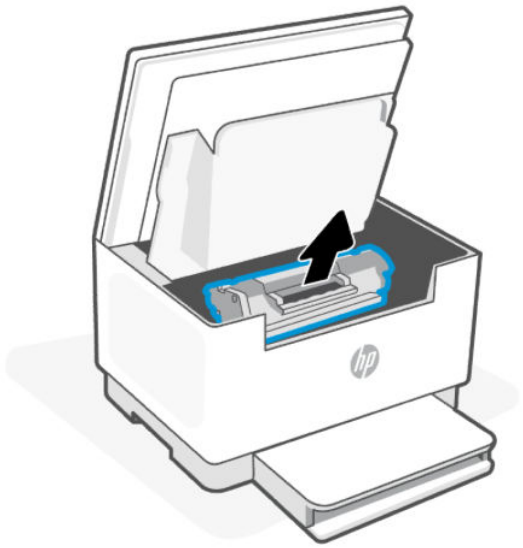

3. Place the used cartridge in the bag and box for recycling. To recycle the used cartridge, go to www.hp.com/go/recycle .

⚠ CAUTION: If toner gets on your clothing, wipe it off with a dry cloth and wash the clothing in cold water. *Hot water sets toner into the fabric.*

4. Remove the new cartridge from the packaging.

⚠ CAUTION: To prevent damage to the cartridge, hold the cartridge at each end. Do not touch the protective cover or roller surface.

5. Grasp both sides of the cartridge and gently rock the cartridge to distribute the toner evenly inside the cartridge.

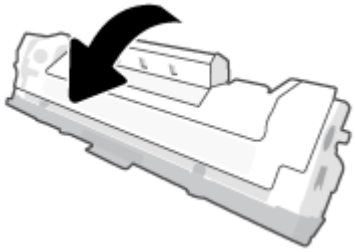

6. Remove the cover from the new cartridge.

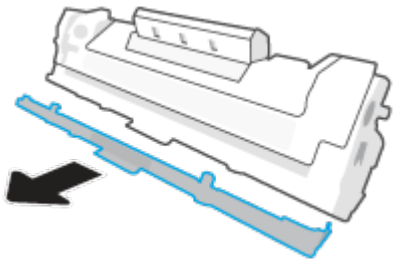

7. Insert the cartridge in the printer, and then close the cartridge access door.

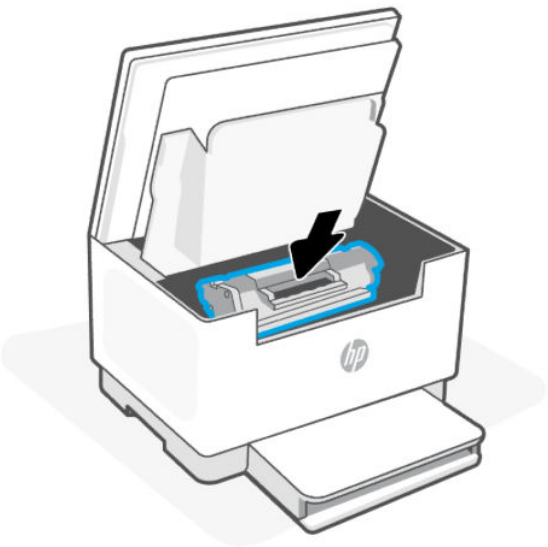

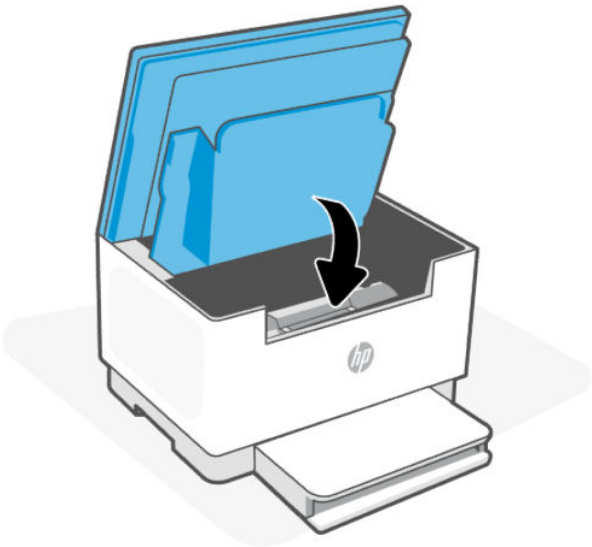

8 Solve problems

This section suggests solutions to common problems.

If the suggestions do not solve the problems, contact support.hp.com.

Interpret control panel light patterns

This topic describes the printer control panel light patterns.

Attention light blinks

The printer doors might not be closed properly.



Verify that the cartridge access door and rear access door are properly closed.

Attention light is on and paper icon/light blinks

The printer might be out of paper or paper is not loaded properly, or there is a paper jam.



Load paper, and then press the **Resume** button to continue or clear the paper jam.

See Load paper or Paper jams and feed issues.

Attention light is on and Cartridge icon/light blinks

The toner level is low.



Replace the toner cartridge.

See Replace the toner cartridge.

Attention light is on and paper icon/light blinks

The printer might be out of paper or paper is not loaded properly, or there is a paper jam.



Load paper, and then press the **Resume** button to continue or clear the paper jam.

See Load paper or Paper jams and feed issues.

Cartridge icon/light is on

The toner level is low.



Consider having a replacement cartridge available to install when the print quality is no longer acceptable.

Interpreting error codes

This topic describes error codes displayed on the control panel display.

Go/01

The printer is in manual-feed mode.

Load the correct paper type and size for the print job in the paper tray, and then press the **Resume** button to continue or press the **Cancel** button to cancel the current job.

Go/02

The printer has completed the first sides of a manual, two-sided print job.

Reload the paper back into the paper tray (print-side down) to print their second sides, and then press the **Resume** button to continue or press the **Cancel** button to cancel the current job.

Load your original print-side down Load the pages into the paper tray

Go/06 (Wi-Fi models only)

The printer has received a request to connect using Wi-Fi Direct.

Press the **Information** button to connect or press the **Cancel** button to stop.

P2

An ID Card Copy job has been started.

When the Open Lid light blinks, open the lid and turn over the identification card, close the lid, and then press the **Resume** button to continue. Press the **Cancel** button to cancel the current job.

Er/01

The paper tray is empty.

Load paper in the paper tray or press the **Cancel** button to cancel the current job.

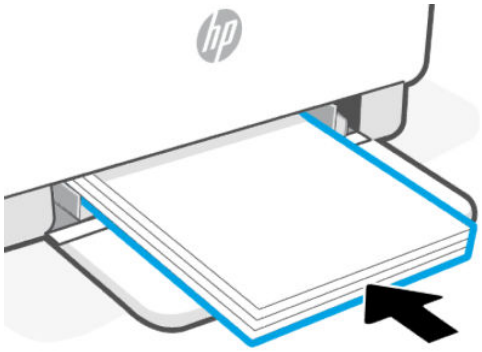

Er/02

The cartridge access door is open.

Make sure the top cover is completely closed.

Er/04

Paper is jammed in the paper tray or printer base.

1. Clear the jam from the paper tray area or the printer base.

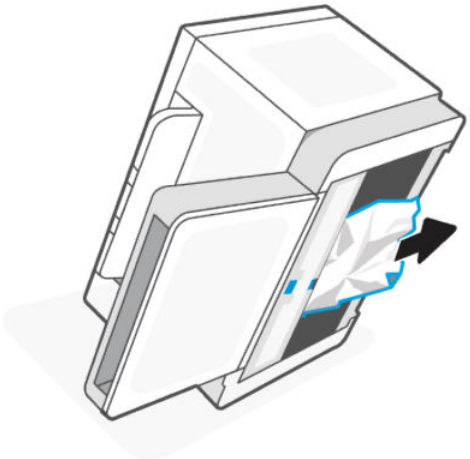

2. After clearing the paper jam, press the **Resume** button to continue.

For more information, see Paper jams and feed issues.

Er/05

Paper jam in the toner cartridge area.

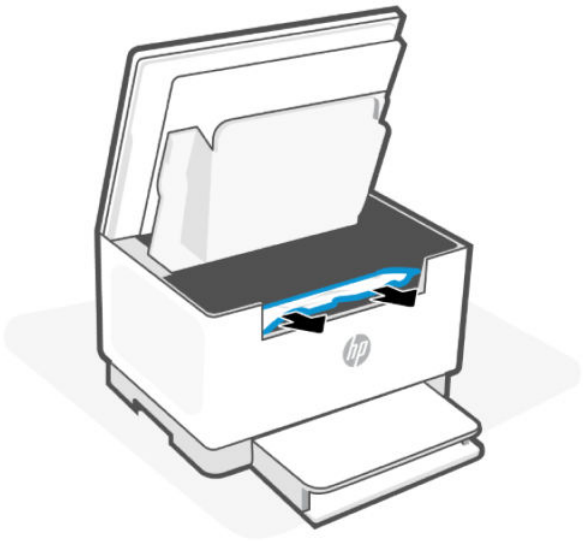

Clear jam in the toner cartridge area. Close the door and your print job should resume automatically.

For more information, see Paper jams and feed issues.

Er/06

Paper jam in the output tray area.

1. Clear the jam in the output tray area.
2. After clearing the paper jam, press the **Resume** button to continue.

For more information, see Paper jams and feed issues.

Er/07

There is a problem with the toner cartridge.

Make sure the shipping material has been removed from the cartridge and the cartridge is compatible and not damaged.

Er/08

The toner level is too low for printing.

The cartridge needs to be replaced, or the cartridge setting needs to be changed to **Continue** in the EWS.

See To access and use the EWS.

Under the **Settings** tab, select **Supplies** and then select **Supply Settings**. If the **Very Low Setting** is configured to **Continue**, then the **Cartridge** light will blink without an error code.

Purchase any of the following toner cartridge and other supplies from the HP Store or local retailers.

- HP 184A Black Original LaserJet Toner Cartridge

- HP 184X Black Original LaserJet Toner Cartridge
- HP 184A Black Contract LaserJet Toner Cartridge
- HP 185A Black Original LaserJet Toner Cartridge
- HP 185X Black Original LaserJet Toner Cartridge
- HP 185X Black Contract LaserJet Toner Cartridge
- HP 179A Black Original LaserJet Toner Cartridge
- HP 180A Black Original LaserJet Toner Cartridge

For more information, see Order supplies, accessories, and parts.

Er/11

There is a problem with the toner cartridge.

Make sure the shipping material has been removed from the cartridge and that the cartridge is compatible and not damaged.

Er/14

The toner cartridge has been protected and is not allowed to be used in this printer.

Replace with the correct toner cartidge.

Er/17

An unauthorized toner cartridge is installed.

Replace with the correct toner cartidge.

Er/25

The size of the paper in the tray does not match the print job settings.

Load the paper type and size that matches the print job settings into the paper tray, or press the **Resume** button to continue with the currently loaded paper. Alternatively, you can press the **Cancel** button to cancel the current job.

Er/26

The printer has experienced a general engine error.

Press the **Resume** button to continue. If the error repeats, turn off the printer. Wait for 30 seconds and turn on the printer. If the problem persists, visit support.hp.com.

Er/30

There is an issue with the scanner.

Ensure that the protective sheet is removed from the scanner glass (if applicable). Turn off the device, wait 30 seconds, and then turn it on. If the problem persists, visit support.hp.com.

Er/41 (sdn/sdw models only)

There is a paper jam in the document feeder.

Clear the paper jam in the document feeder. After clearing the jam, retry your copy or scan job.

See Document feeder (Er/41) - (sdn/sdw models only).

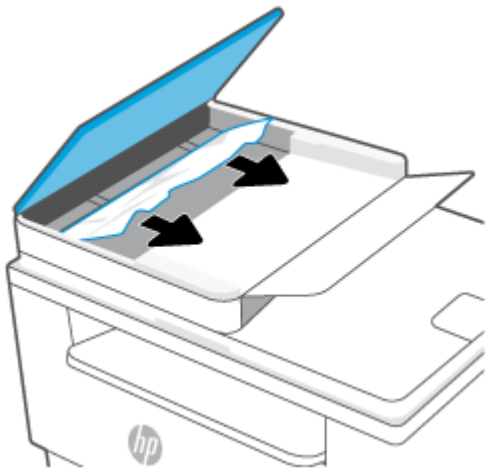

Er/42

There is a paper jam in the rear duplexer.

Clear the jam in the rear duplexer. After clearing the paper, press the **Resume** button to continue the print job.

Er/50, Er/51, Er/52, Er/54, Er/55, Er/58, Er/59

There is an issue with the print engine.

Turn off the printer. Wait for 30 seconds and turn on the printer. If the problem persists, visit support.hp.com.

Er/61

An error occurred during Wi-Fi Protected Setup (WPS) and the printer was not able to connect to the network.

Press the the **Cancel** button to continue and then try connecting the printer to the wireless network again.

See Connect to a Wi-Fi network using Wi-Fi Protected Setup (WPS).

If the problem persists, try connecting using the HP app.

See Connect to a Wi-Fi network using the HP app.

Print reports

Learn how to print the printer reports.

NOTE: This section is applicable to wireless printers only.

For USB models, press and hold the **Resume** button  for 5 seconds to print a configuration report.

Print reports

Printer report	How to print	Description
Information Report	Press the **Information** button . Open the EWS, select the **Tools** tab, and select **Reports**, and then select **Printer Reports**. Select the **Printe the Priuter Information Report** button to print an Information page.	Provides a summary of printer status and information, including the IP address for Wi-Fi models.
Configuration Report	Press and hold the **Information** button  for 5 seconds until all the buttons are lit. Press the **Resume** button  to print a configuration report. Open the EWS, Select the **Tools** tab, and select **Reports**, and then select **Printer Reports**. Select the **Printer the Configuration Report** button to print an Information page.	Shows the printer usage log (pages printed), event logs, energy settings, network status, and more.
Wireless Test Report	Press and hold the **Information** button  for 5 seconds until all the buttons are lit. Press the **Information** button  and the **Resume** button  at the same time. Open the EWS, select the **Tools** tab, and select **Reports**, and then select **Printer Reports**. Select the **Print Wireless Test Report** button to print a test page.	Shows the diagnostics results for the status of the wireless network, wireless signal strength, detected networks, and more.
Image Registration	Open the EWS, select the **Settings** tab. From the left menu, select **Preferences**, and then select **Image Registration**. In the Image Registration area, select the desired option. Select **Apply** or select **Print Test Page**.	Prints a test page.

Paper jams and feed issues

Learn how to troubleshoot jams and paper-feed issues.

Possible jam locations (d/dw and sdn/sdw models)

Jams can occur at the following locations in the printer.

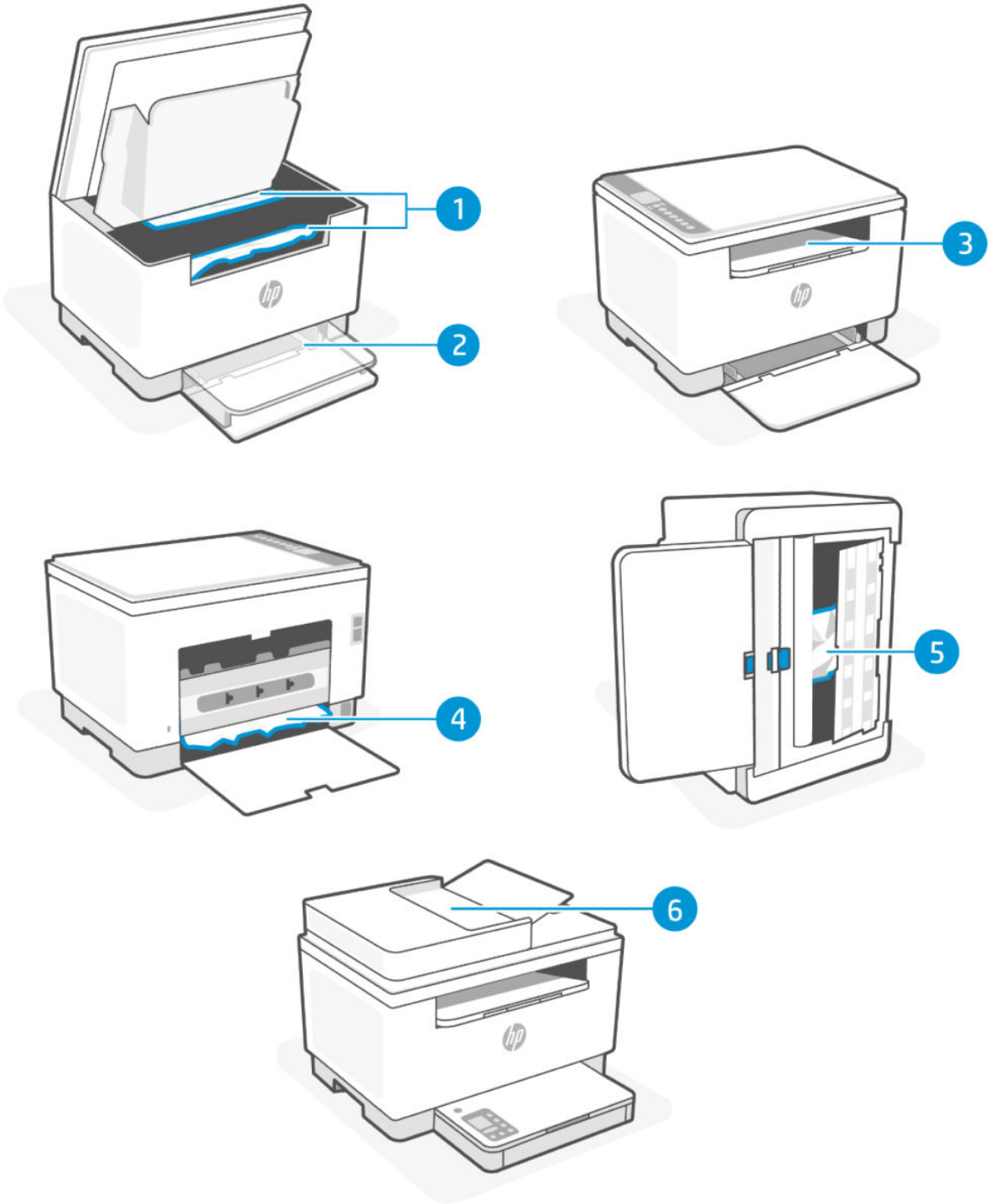

Jam locations (d/dw and sdn/sdw models)

Feature	Location	Error code
1	Toner cartridge area	Er/05
2	Paper tray	Er/04
3	Output tray	Er/06

Jam locations (d/dw and sdn/sdw models) (continued)

Feature	Location	Error code
4	Rear duplexer	Er/42
5	Printer base	Er/04
6	Document feeder (some models only)	Er/41

NOTE: Jams can occur in more than one location.

Remove jammed paper

Look in all areas where jams can occur and remove any jammed paper or foreign objects found.

CAUTION:

- Do not use sharp objects, such as tweezers or needle-nose pliers, to remove jams.
- When removing jammed paper, use both hands to pull the paper straight out from the printer.
- To help avoid additional paper jams, make sure to remove all small pieces of paper and foreign objects found.
- To avoid the risk of electrical shock, make sure to unplug the power cord to move the carriage by hand.
- Use a flashlight to help find any jammed paper or foreign objects inside the printer.
- If the paper tears when you are removing it from the rollers, check the rollers and wheels for torn pieces of paper that might remain inside the printer.
- If you do not remove all the pieces of paper from the printer, more paper jams are likely to occur.
- Avoid pulling jammed paper from the front of the printer. Instead, follow the steps below to clear the jam. Pulling out jammed paper from the front of the printer might cause the paper to tear and leave torn pieces inside the printer; this could result in more jams later.

Paper tray (Er/04)

Remove any jammed paper that is accessible from the paper tray area.

1. Turn off the printer and disconnect the power cord.

2. Open the cartridge access door, and then remove the print cartridge.

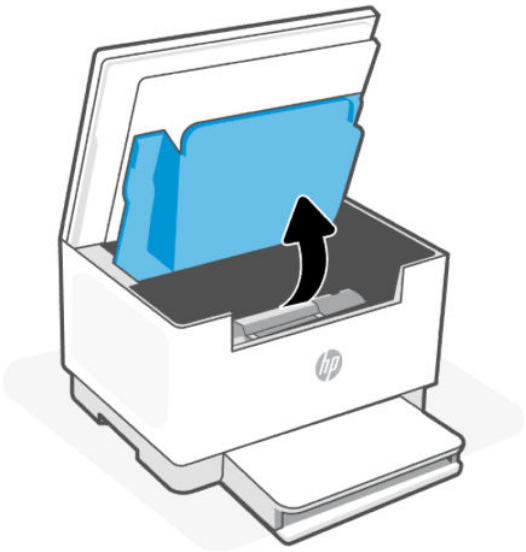

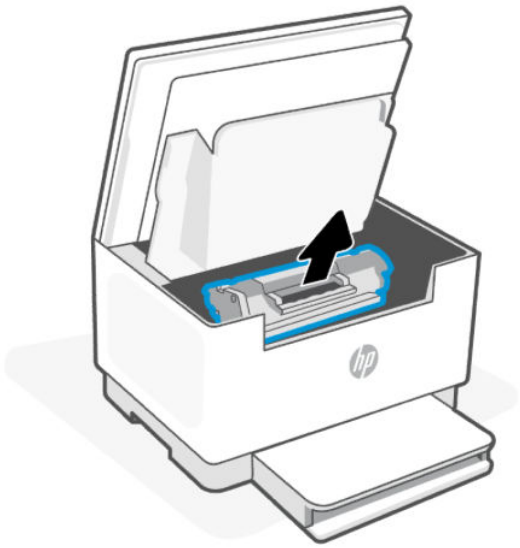

3. Remove the paper stack from the paper tray.

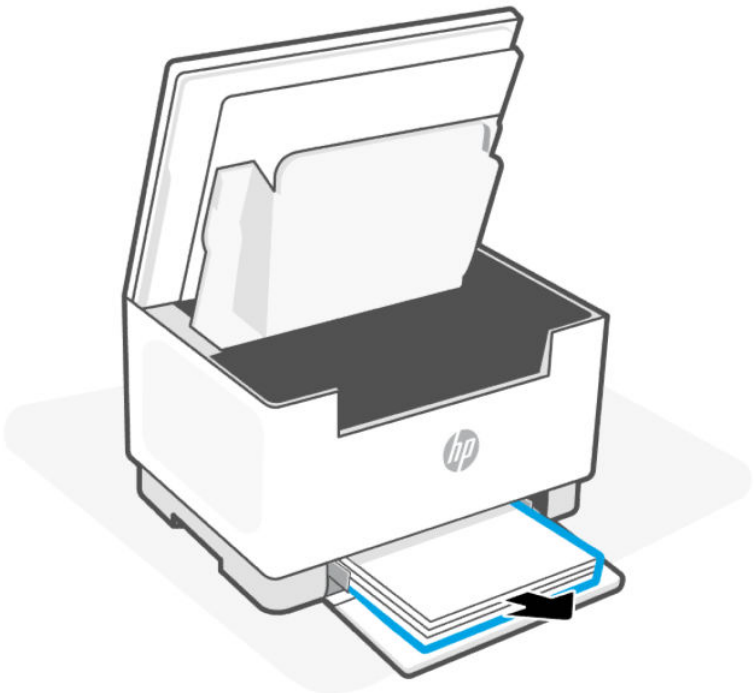

4. Use both hands to remove any jammed paper from the paper tray.

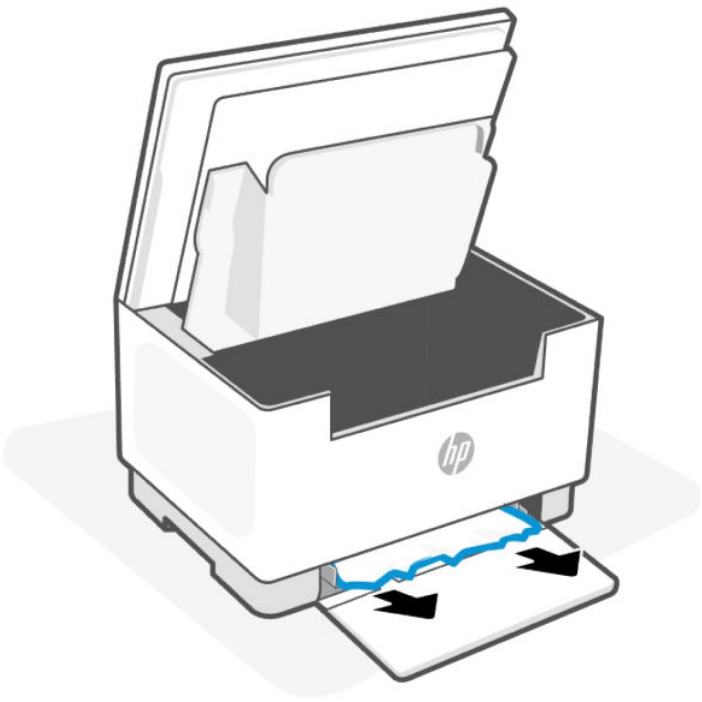

5. Reinstall the toner cartridge, and then close the cartridge access door.

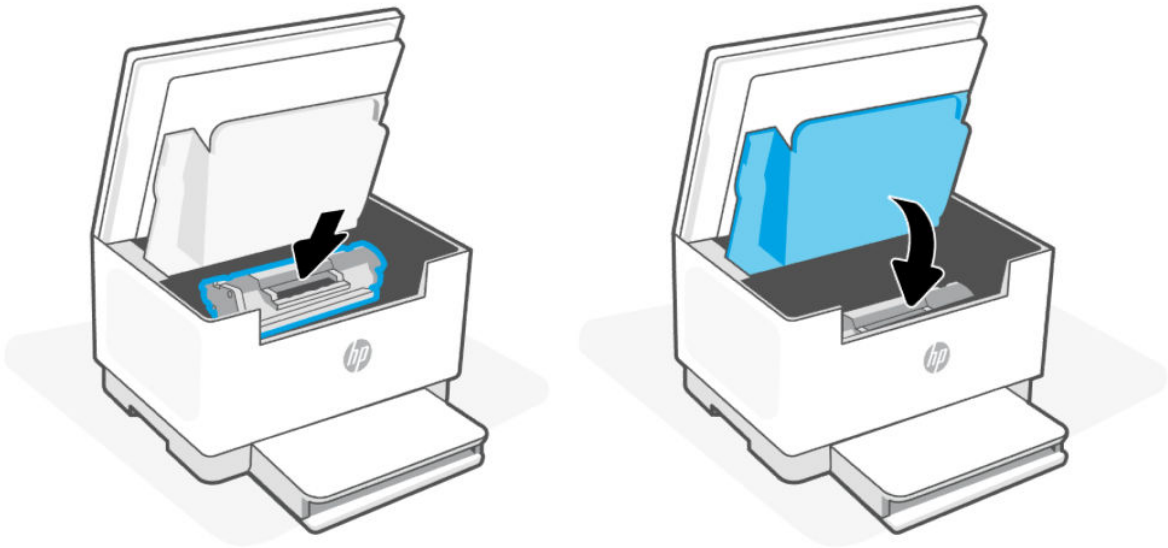

6. Reconnect the power cord and turn on your printer.

Printer base (Er/04)

Remove any jammed paper that is accessible from the printer base.

1. Turn off the printer and disconnect the power cord.
2. Flip the printer on its side, as shown.

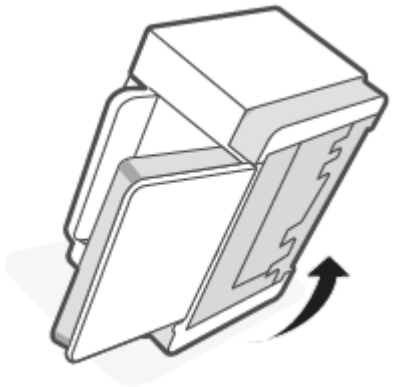

3. Release and then hold on to the blue latch to remove the panel.

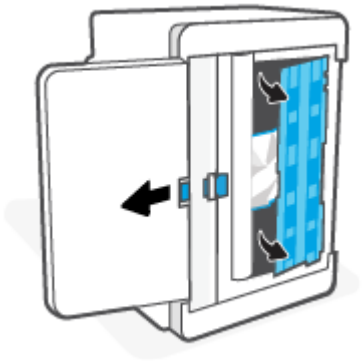

4. Remove any jammed paper.



5. While holding the blue latch, align and insert the panel as shown. Release the blue latch to lock the panel in place.

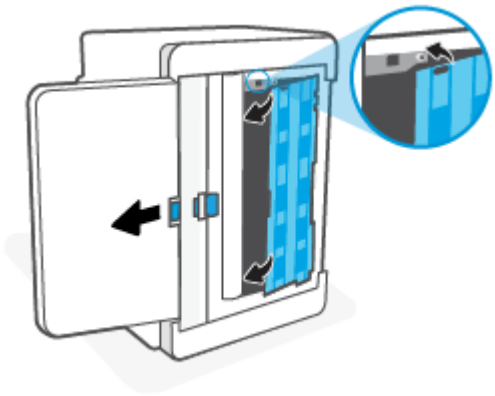

6. Flip the printer back to its original position.

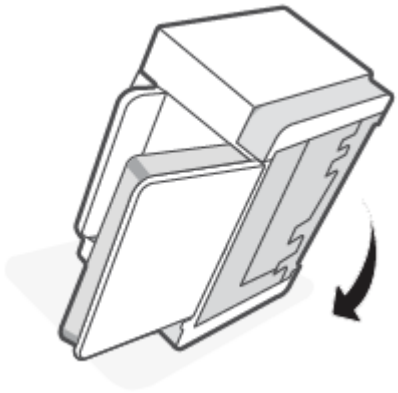

7. Reconnect the power cord and turn on your printer.

Toner cartridge area (Er/05)

Remove any jammed paper that is accessible from the toner cartridge area.

1. Turn off the printer and disconnect the power cord.

2. Open the cartridge access door, and then remove the print cartridge.

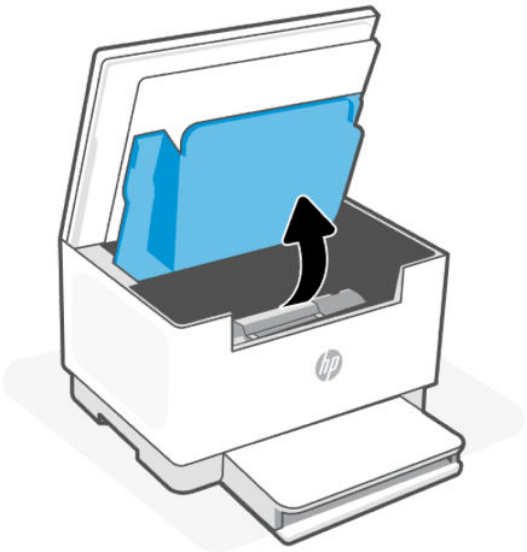

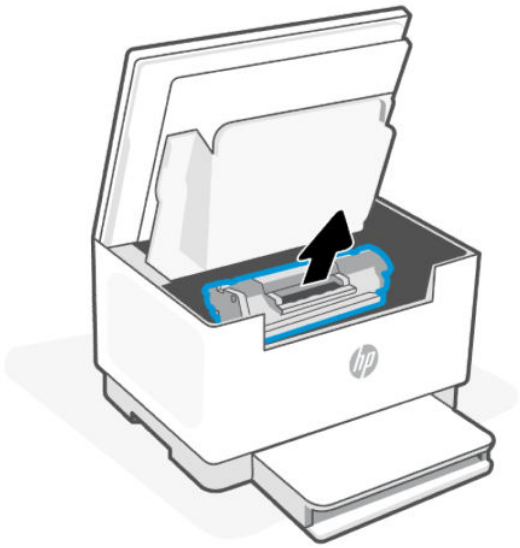

3. Carefully grasp any jammed paper, and then slowly pull it out of the printer.

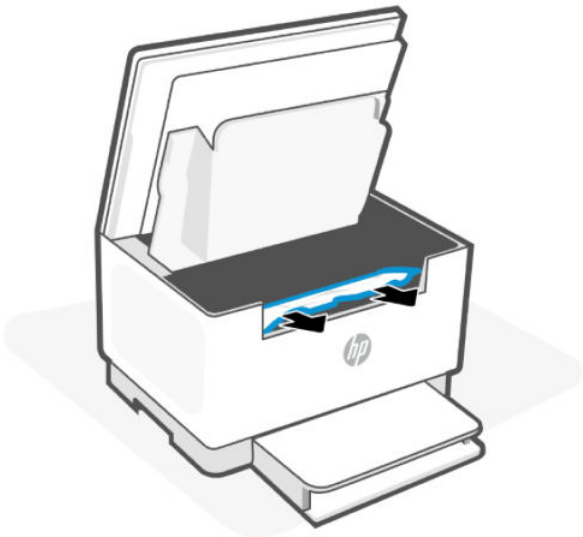

4. Reinstall the toner cartridge, and then close the cartridge access door.

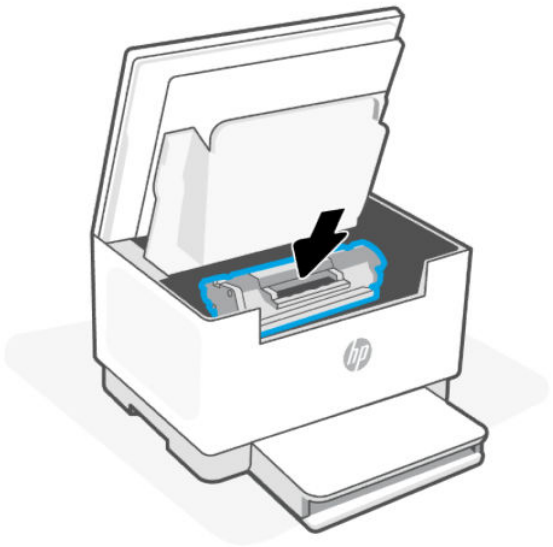

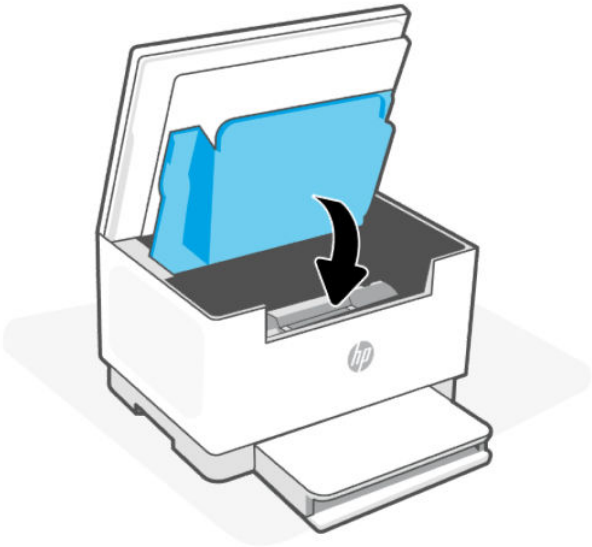

5. Reconnect the power cord and turn on your printer.

Output tray area (Er/06)

Remove any jammed paper that is accessible from the output tray area.

1. Lower the tray cover and look inside the output tray.

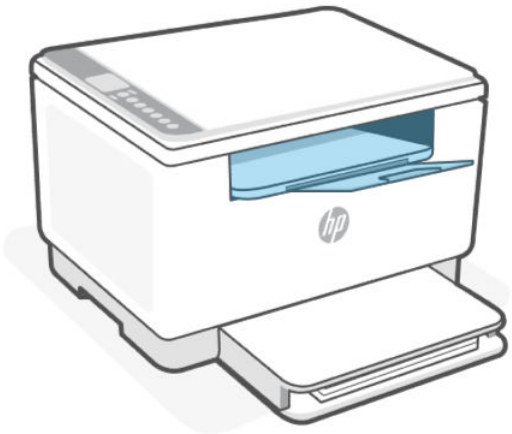

2. Remove any jammed paper from the output tray area. Use both hands to remove jammed paper to avoid tearing the paper.

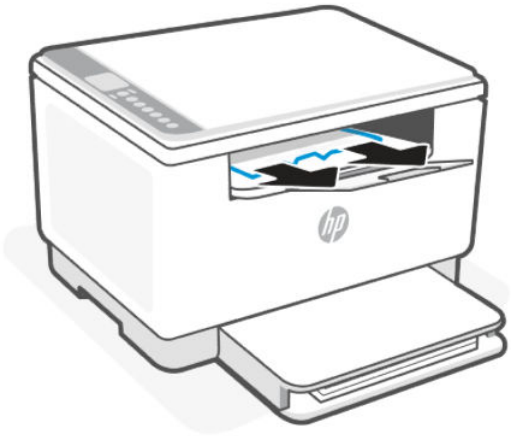

3. If printing does not start automatically, press the **Resume** button to continue the print job.

Rear duplexer (Er/42)

Remove any jammed paper that is accessible from the rear duplexer.

1. Turn off the printer and disconnect the power cord.
2. Open the rear access door.
3. Remove any jammed paper.

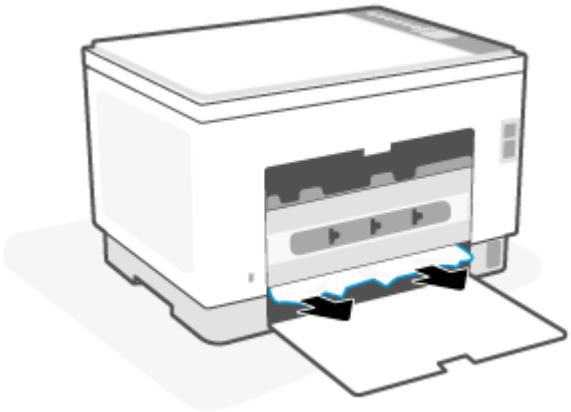

4. Close the rear access door.
5. Reconnect the power cord and turn on your printer.

Document feeder (Er/41) - (sdn/sdw models only)

Remove any jammed paper from the document feeder (for select printers).

1. Remove any loose paper from the paper tray of the document feeder.

2. Lift the jam-access cover.

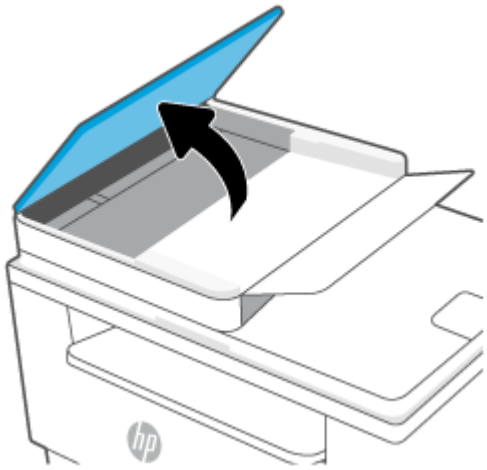

3. Remove any jammed paper from the paper tray area.

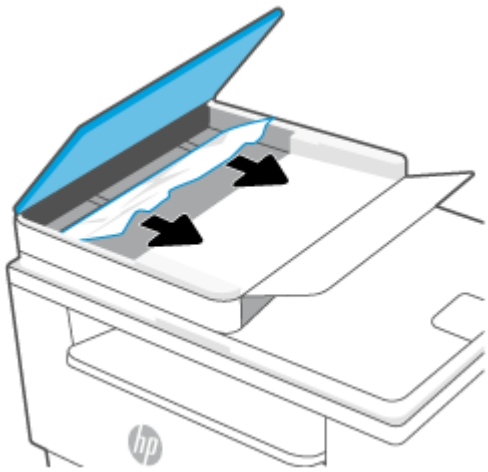

4. Close the jam-access cover.

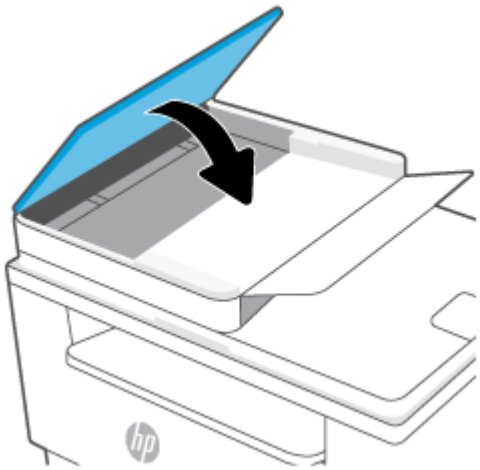

Restore original factory defaults and settings

If you have changed settings on the printer and want to reset them, restore the printer to the original factory settings and network settings.

1. Open the EWS. See To access and use the EWS.
2. Select the **Settings** tab.
3. From the left menu, select **Restore Defaults**, and then select **Restore Factory Defaults**.
4. In the Restore Defaults area, select the **Restore Factory Defaults** button.

   The printer automatically restarts.

Cartridge low

This topic describes how to manage the cartridges at low and very low settings.

Cartridge is low

Actual remaining cartridge life may vary. Consider having a replacement available to install when print quality is no longer acceptable. The cartridge does not need to be replaced now.

Continue printing with the current cartridge until redistributing the toner no longer yields acceptable print quality. To redistribute the toner, remove the toner cartridge from the printer and gently rock the cartridge back and forth on its horizontal axis. For graphical representation, see Remove and replace the toner cartridge instructions. Reinsert the toner cartridge into the printer and close the cover.

Cartridge is very low

Actual cartridge life remaining may vary. Consider having a replacement available to install when print quality is no longer acceptable. The cartridge does not need to be replaced now unless the print quality is no longer acceptable.

Once an HP toner cartridge has reached Very Low, HP's Premium Protection Warranty on that toner cartridge has ended.

Change the "Very Low" settings

You can change the way the printer reacts when supplies reach the Very Low state. You do not have to re-establish these settings when you install a new toner cartridge.

1. Open the EWS. See To access and use the EWS.
2. Select the **Settings** tab.
3. From the left menu, select **Supplies**, and then select **Supply Settings**.
4. Select one of the following options from the **Cartridge Very Low Setting (Black Cartridge):** drop-down list:
   - Select the **Stop** option to set the printer to stop printing until you replace the cartridge.
   - Select the **Prompt** option to set the printer to stop printing and prompt you to replace the toner cartridge. You can acknowledge the prompt and continue printing.
   - Select the **Continue** option to set the printer to alert you that the cartridge is very low, but to continue printing.

5. Select **Apply** to save the changes.

Order supplies

Order supplies

Order	HP Support
Order supplies and paper	www.hp.com/go/suresupply
Order through service or support providers	Contact an HP-authorized service or support provider.

Printer does not pick up paper or misfeeds

The following solutions can help solve problems if the printer is not picking up paper from the paper tray or is picking up multiple sheets of paper at one time. Either of these situations can result in paper jams.

The printer does not pick up paper

If the printer does not pick up paper from the paper tray, try these solutions.

1. Open the product and remove any jammed sheets of paper.
2. Load the tray with the correct size of paper for your job.
3. Make sure the paper size and type are set correctly.
4. Make sure the paper guides in the tray are adjusted correctly for the size of paper. Adjust the guides to the appropriate indentation in the tray.
5. Clean the pickup roller.

NOTE: If the problem persists, visit support.hp.com site for this printer to learn more about solving paper problems.

The product picks up multiple sheets of paper

If the product picks up multiple sheets of paper from the paper tray, try these solutions.

1. Remove the stack of paper from the paper tray, rotate it 180 degrees, and flip it over. Return the stack of paper to the paper tray.
2. Use only paper that meets HP specifications for this product.
3. Use paper that is not wrinkled, folded, or damaged. If necessary, use paper from a different package.
4. Make sure the paper tray is not overfilled. If it is, remove the entire stack of paper from the tray, straighten the stack, and then return some of the paper to the paper tray.
5. Make sure the paper guides in the tray are adjusted correctly for the size of paper. Adjust the guides to the appropriate indentation in the tray.
6. Make sure the printing environment is within recommended specifications.

Clean the pickup roller

This topic describes how to clean the pickup roller to avoid paper jams.

1. Turn off the printer.
2. Unplug the power cord from the back of the printer.
3. Remove the stack of paper from the paper tray.
4. Flip the printer on its side.

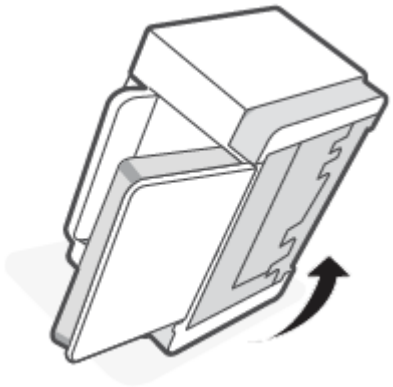

5. Release and hold on to the blue latch, and then remove the panel.

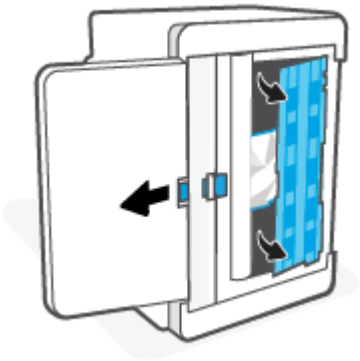

6. Dampen a soft, lint-free cloth with alcohol or water, and then wipe each roller.

NOTE: Apply a moderate amount of pressure to each roller to ensure that they are completely cleaned.

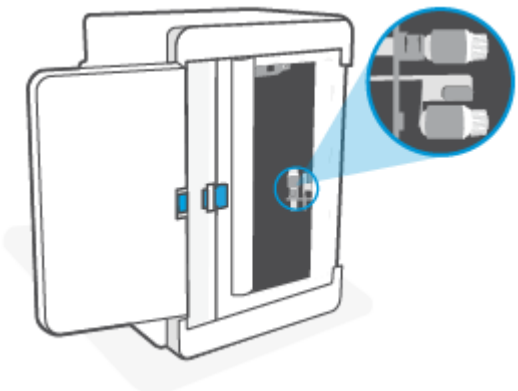

7. Wait approximately 10 minutes to allow the pickup roller to dry completely.
8. While holding the blue latch, align and insert the panel. Release the blue latch to lock the panel in place.

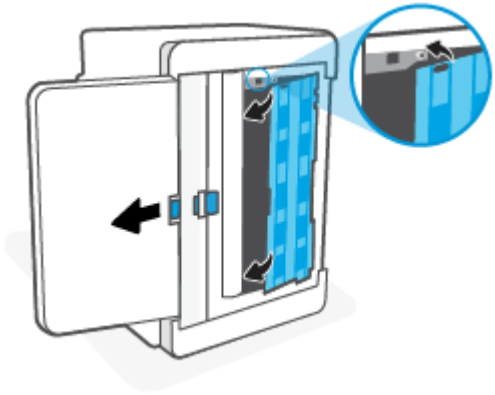

9. Flip the printer back to the original, upright position.

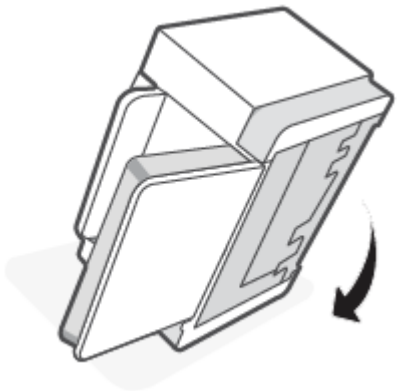

10. Reload the stack of paper into the paper tray.
11. Plug the power cord back into the printer, and then turn on the printer.

Improve print quality

The following information provides troubleshooting steps to resolve print-quality problems, including the following problems:

- Smears
- Fuzzy print
- Dark print
- Light print
- Streaks
- Missing toner
- Scattered dots of toner

- Loose toner
- Skewed images

For information about resolving specific image defects, see Resolve print quality problems.

Print from a different software program

Try printing from a different software program. If the page prints correctly, the problem is with the software program from which you were printing.

If the page does not print correctly, try updating the printer and print again. See Printer updates.

Check the paper type setting for the print job

Check the paper type setting when printing from a software program and the printed pages have smears, fuzzy or dark print, curled paper, scattered dots of toner, loose toner, or small areas of missing toner.

Check the paper type setting on the printer

Verify that the tray is loaded with the correct type of paper.

Check the paper type setting (Windows)

1. From the software program, select the **Print** option.
2. Select the printer, and then select the **Properties** or **Preferences** button.
3. Check the Paper Type setting.

Check the paper type setting (Mac OS)

1. Select the **File** menu, and then select the **Print** option.
2. In the **Printer** menu, select the printer.
3. By default, the print driver displays the **Copies & Pages** menu. Open the menu's drop-down list, and then select the **Finishing** menu.
4. Select a type from the **Media Type** drop-down list.

Check toner cartridge status

Print quality problems can occur when using a toner cartridge that is at its estimated end of life. The configuration report indicates when a supply level is very low.

Once an HP toner cartridge has reached Very Low, HP's Premium Protection Warranty on that toner cartridge has ended.

The toner cartridge does not need to be replaced now unless the print quality is no longer acceptable. Consider having a replacement available to install when print quality is no longer acceptable.

The information page provides information about the printer, connectivity settings, and supplies status.

1. Open the EWS.

2. Check to see if you are using an Original HP toner cartridge.

   An Original HP toner cartridge has “HP” on it or has the HP logo on it. For more information on identifying HP cartridges go to www.hp.com/go/learnaboutsupplies

Clean the cartridge

During the printing process, cartridges might be contaminated by paper dust and cause print quality issues such as background issues, vertical dark bands, or repetitive horizontal banding.

Follow these steps to improve the above mentioned print quality issues:

1. Open the EWS. See To access and use the EWS.
2. Select the **Tools** tab.
3. From the left menu, select **Utilities**, and then select **Printer Quality Toolbox**.
4. In the Print Quality Toolbox area, navigate to **Clean the Cartridge**, and then select **Start** to begin the cleaning process.

NOTE: The cleaning process takes approximately 3 minutes to complete.

Print a cleaning page

During the printing process, paper, toner, and dust particles can accumulate inside the printer and can cause print-quality issues such as toner specks or spatter, smears, streaks, lines, or repeating marks.

Use the following procedure to print a cleaning page.

1. Open the EWS. See To access and use the EWS.
2. Select the **Tools** tab.
3. From the left menu, select **Utilities**, and then select **Print Quality Toolbox**.
4. In the Print Quality Toolbox area, navigate to **Clean the Fuser**, and then select **Start** to begin the cleaning process.

NOTE: The cleaning process takes approximately 3 minutes to complete.

Visually inspect the toner cartridge

Follow these steps to inspect the toner cartridge.

1. Remove the toner cartridge from the printer and verify that the sealing tape has been removed.
2. Check the memory chip for damage.
3. If you see any damage on the toner cartridge, replace the toner cartridge.
4. Reinstall the toner cartridge and print a few pages to see if the problem is resolved.

Check paper and the printing environment

Perform the following steps.

Step 1: Use paper that meets HP specifications

Some print-quality problems arise from using paper that does not meet HP specifications.

- Always use a paper type and weight that this printer supports.
- Use paper that is of good quality and free of cuts, nicks, tears, spots, loose particles, dust, wrinkles, voids, staples, and curled or bent edges.
- Use paper that has not been previously printed on.
- Use paper that does not contain metallic material, such as glitter.
- Use paper that is designed for use in laser printers. Do not use paper that is designed only for use in Inkjet printers.
- Use paper that is not too rough. Using smoother paper generally results in better print quality.

Step 2: Check the environment

The environment can directly affect print quality and is a common cause for print-quality or paper-feeding issues. Try the following solutions:

- Move the printer away from drafty locations, such as open windows or doors, or air-conditioning vents.
- Make sure the printer is not exposed to temperatures or humidity outside of printer specifications.
- Do not place the printer in a confined space, such as a cabinet.
- Place the printer on a sturdy, level surface.
- Remove anything that is blocking the vents on the printer. The printer requires good air flow on all sides, including the top.
- Protect the printer from airborne debris, dust, steam, grease, or other elements that can leave residue inside the printer.

Adjust print density

Complete the following steps to adjust the print density.

1. Open the EWS. See To access and use the EWS.
2. Select the **Settings** tab.
3. From the left menu, select **Preferences**, and then select **General Printer Settings.**.
4. In the General Printer Settings area, change the correct print density settings.
5. Select **Apply** to save the changes.

Resolve print quality problems

The following information provides troubleshooting steps for solving image defect issues, including the following defects:

- Light print
- Gray background or dark print

- Blank pages
- Black pages
- Dark or light bands
- Dark or light streaks
- Missing toner
- Skewed images
- Colors that do not align
- Curled paper

Troubleshoot print quality problems

Image defects quick reference

Image defects	Image defects	Image defects
Light print	Gray background or dark print	Blank page — No print
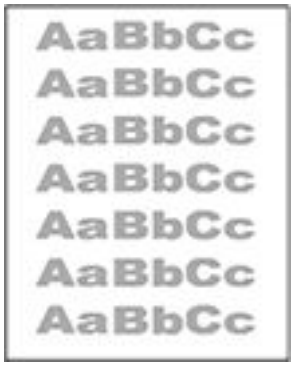		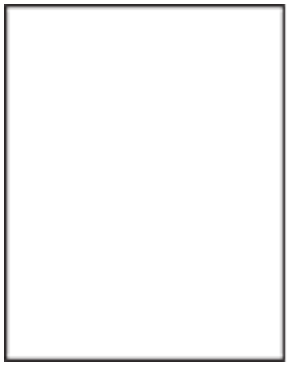
Black page	Banding defects	Streak defects
	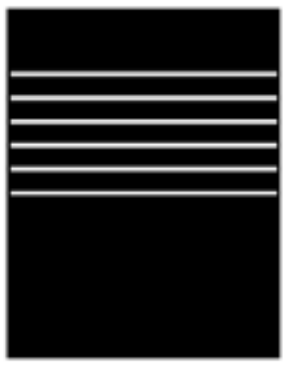	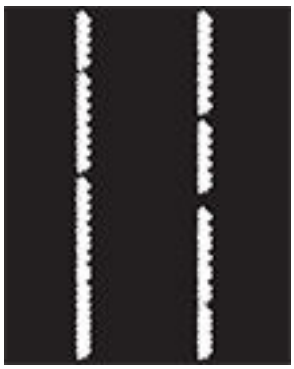

Image defects quick reference (continued)

Image defects	Image defects	Image defects
Fixing/fuser defects	Image placement defects	Output defects
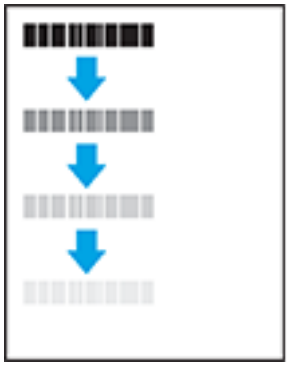		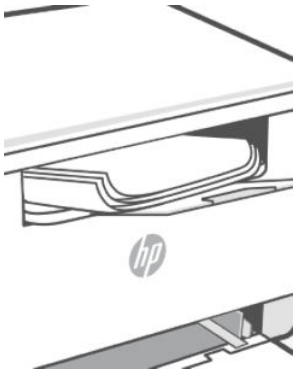

Image defects, no matter the cause, can often be resolved using the same steps. Use the following steps as a starting point for solving image defect issues.

1. Reprint the document. Print quality defects can be intermittent in nature or can go away completely with continued printing.
2. Check the condition of the cartridge. If a cartridge is in a **Very Low** state (it has passed the rated life), replace the cartridge.
3. Make sure that the driver and tray print mode settings match the media that is loaded in the tray. Try using a different ream of media or a different tray. Try using a different print mode.
4. Make sure that the printer is within the supported operating temperature/humidity range.
5. Make sure that the paper type, size, and weight are supported by the printer. See the printer support page at support.hp.com and find your printer.

NOTE: The term “fusing” refers to the part of the printing process where toner is affixed to paper.

The following examples depict Letter-size paper that has passed through the printer short-edge first.

Light print

Description	Sample	Possible solutions
Light print: The printed content on the entire page is light or faded.		1. Reprint the document. 2. Remove the cartridge, and then shake it to redistribute the toner. 3. Make sure that the cartridge is installed correctly. 4. Check the printer supplies status from the information page. To print the report, press the **Information** button (i). 5. Replace the toner cartridge. 6. If the problem persists, visit support.hp.com.

Gray background or dark print

Description	Sample	Possible solutions
Gray background or dark print: The image or text is darker than expected.		1. Make sure that the paper in the tray has not already been run through the printer. 2. Use a different paper type. 3. Reprint the document. 4. Make sure that the printer is within the supported operating temperature and humidity range. 5. Replace the toner cartridge. 6. If the problem persists, visit support.hp.com.

Blank page — No print

Description	Sample	Possible solutions
Blank page — No print: The page is completely blank and contains no printed content.	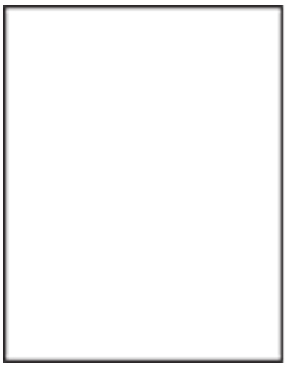	1. Make sure that the cartridge is an Original HP cartridge. 2. Make sure that the cartridge is installed correctly. 3. Print with a different cartridge. 4. Check the paper type in the paper tray and adjust the printer settings to match. If necessary, select a lighter paper type. 5. If the problem persists, visit support.hp.com.

Black page

Description	Sample	Possible solutions
Black page: The entire printed page is black.		1. Visually inspect the toner cartridge to check for damage. 2. Make sure that the cartridge is installed correctly. 3. Replace the toner cartridge. 4. If the problem persists, visit support.hp.com.

Banding defects

Description	Sample	Possible solutions
Repetitive wide-pitch banding and impulse bands: Dark or light lines which repeat down the length of the page. They might be sharp or soft in nature. The defect displays only in areas of fill, not in text or sections with no printed content.	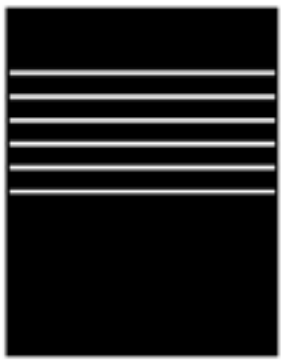	1. Reprint the document. 2. Replace the toner cartridge. 3. Use a different paper type. 4. If the problem persists, visit support.hp.com.

Streak defects

Description	Sample	Possible solutions
Light vertical streaks: Light streaks that usually span the length of the page. The defect displays only in areas of fill, not in text or sections with no printed content.	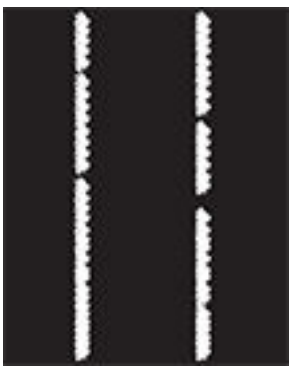	1. Reprint the document. 2. Remove the cartridge, and then shake it to redistribute the toner. 3. If the problem persists, go to support.hp.com if the problem persists. NOTE: Both light and dark vertical streaks can occur when the printing environment is outside the specified range for temperature or humidity. Refer to your printer's environmental specifications for allowable temperature and humidity levels.

Streak defects (continued)

Description	Sample	Possible solutions
Dark vertical streaks and ITB cleaning streaks: Dark lines which occur down the length of the page. The defect might occur anywhere on the page, in areas of fill or in sections with no printed content.		1. Reprint the document. 2. Remove the cartridge, and then shake it to redistribute the toner. 3. Print a cleaning page. 4. Check the toner level in the cartridge. See To access and use the EWS. 5. If the problem persists, visit support.hp.com.

Fixing/fuser defects

Description	Fixing/fuser	Possible solutions
Hot fuser offset (shadow): Slight shadows, or offsets, of the image repeated down the page. The repeated image might fade with each recurrence.	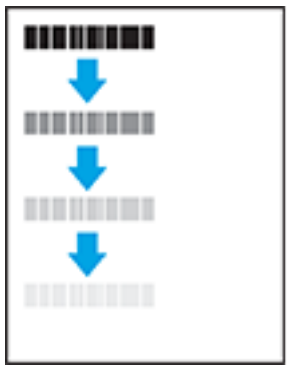	1. Reprint the document. 2. Check the paper type in the paper tray and adjust the printer settings to match. If necessary, select a lighter paper type. 3. If the problem persists, visit support.hp.com.
Poor fusing: Toner rubs off along either edge of page. This defect is more common at the edges of high-coverage jobs and on light media types but can occur anywhere on the page.	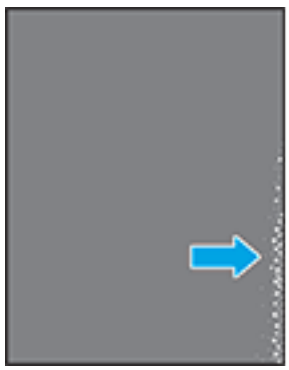	1. Reprint the document. 2. Check the paper type in the paper tray and adjust the printer settings to match. If necessary, select a heavier paper type. 3. If the problem persists, visit support.hp.com.

Image placement defects

Description	Sample	Possible solutions
Margins and skew: The image is not centered or is skewed on the page. The defect occurs when the paper is not positioned properly as it is pulled from the tray and moves through the paper path.		1. Reprint the document. 2. Remove the paper and then reload the tray. Make sure that all the paper edges are even on all sides. 3. Make sure that the top of the paper stack is below the tray full indicator. Do not overfill the tray. 4. Make sure that the paper guides are adjusted to the correct size for the paper. Do not adjust the paper guides tightly against the paper stack. Adjust them to the indentations or markings in the tray. 5. If the problem persists, visit support.hp.com.

Output defects

Description	Sample	Possible solutions
Output curl: Printed paper has curled edges. The curled edge can be along the short or long side of the paper. Two types of curl are possible: • **Positive curl:** The paper curls toward the printed side. The defect occurs in dry environments or when printing high-coverage pages. • **Negative curl:** The paper curls away from the printed side. The defect occurs in high-humidity environments or when printing low-coverage pages.	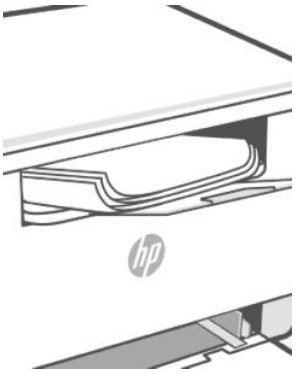	1. Reprint the document. 2. **Positive curl:** From the printer EWS, select a heavier paper type. The heavier paper type creates a higher temperature for printing. **Negative curl:** From the printer EWS, select a lighter paper type. The lighter paper type creates a lower temperature for printing. Try storing the paper in a dry environment or use freshly opened paper. 3. Print in duplex mode. 4. If the problem persists, visit support.hp.com.
Output stacking: The paper does not stack well in the output tray. The stack might be uneven, skewed, or the pages might be pushed out of the tray and onto the floor. Any of the following conditions can cause this defect: • Extreme paper curl • The paper in the tray is wrinkled or deformed • The paper is a non-standard paper type, such as envelopes • The output tray is too full	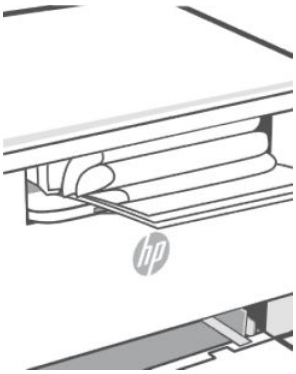	1. Reprint the document. 2. Extend the output tray extender. 3. If the defect is caused by extreme paper curl, complete the troubleshooting steps for Output curl (See the section in the table above). 4. Use a different paper type. 5. Use freshly opened paper. 6. Remove the paper from the output tray before the tray gets too full. 7. If the problem persists, visit support.hp.com.

Improve copy and scan image quality

This topic helps you troubleshoot copy and scan issues.

If the printer is having image quality problems, first make sure you are using high-quality originals. If the problem still exists, try the following solutions in the order presented to resolve the issue.

Check the scanner glass for dirt and smudges

Over time, specks of debris might collect on the scanner glass and white plastic backing, which can affect performance. Use the following procedure to clean the scanner.

1. Press the **Power button** to turn the printer off, and then disconnect the power cable from the electrical outlet.
2. Open the scanner lid.
3. Clean the scanner glass and the white plastic backing underneath the scanner lid with a soft cloth or sponge that has been moistened with nonabrasive glass cleaner.

   ⚠ CAUTION: Do not use abrasives, acetone, benzene, ammonia, ethyl alcohol, or carbon tetrachloride on any part of the printer; these can damage the printer. Do not place liquids directly on the glass or platen. They might seep and damage the printer.
4. Dry the glass and white plastic parts with a chamois or a cellulose sponge to prevent spotting.
5. Connect the power cable to an outlet, and then press the **Power button** to turn the printer on.

Check the paper settings

Learn how to change the paper settings.

1. Open the EWS. See To access and use the EWS.
2. Select the **Settings** tab.
3. From the left menu, select **Preferences**, and then select **Tray and Paper Management**.
4. In the Tray and Paper Management area, select the desired settings.
5. Select **Apply** to save the changes.

Optimize for text or pictures

Learn how to optimize for text or pictures.

1. Open the EWS. See To access and use the EWS.
2. Select the **Copy/Print** tab.
3. From the left menu, select **Copy/Print**, and then select **Default Settings**.
4. In the Default Settings area, under **Copy Quality and Enhancements** section, select the setting you want to use.
   - **Mixed**: Use this setting for documents that contain a mixture of text and graphics.

- **Text**: Use this setting for documents that contain mostly text.
- **Photo**: Use this setting for documents that contain mostly graphics.

5. Select **Apply** to save the changes.

Edge-to-edge copying

The printer cannot print fully edge-to-edge. There is a 4 mm (1/6 in) unprintable border around the page.

Considerations for printing or scanning documents with cropped edges:

- When the original is smaller than the output size, move the original 4 mm (1/6 in) away from the corner indicated by the icon on the scanner. Recopy or scan in this position.
- When the original is the size of the printed output that you want, use the Reduce/Enlarge feature to reduce the image so the copy is not cropped.

Solve Wi-Fi network problems

Use the troubleshooting information to help resolve issues.

NOTE: To determine if Wi-Fi Direct printing is enabled on your printer, print an Information report from the printer control panel.

Wireless connectivity checklist

- Verify that the printer and the wireless router are turned on and have power. Make sure the printer Wi-Fi is turned on.
- Verify that the service set identifier (SSID) is correct. Print an information report to determine the SSID.

  On the printer control panel, press the **Information** button .

  If you are not sure the SSID is correct, run the Wi-Fi setup again.
- With secured networks, verify that the security information is correct. If the security information is incorrect, run the Wi-Fi setup again.
- If the Wi-Fi network is working correctly, try accessing other computers on the wireless network. If the network has internet access, try connecting to the internet over a Wi-Fi connection.
- Verify that the encryption method (AES or TKIP) is the same for the printer as it is for the Wi-Fi access point (on networks using WPA security).
- Verify that the printer is within the range of the Wi-Fi network. For most networks, the printer must be within 30 m (100 ft) of the Wi-Fi access point (Wi-Fi router).
- Verify that obstacles do not block the Wi-Fi signal. Remove any large metal objects between the access point and the printer. Make sure poles, walls, or support columns containing metal or concrete do not separate the printer and Wi-Fi access point.
- Verify that the printer is located away from electronic devices that might interfere with the Wi-Fi signal. Many devices can interfere with the Wi-Fi signal including motors, cordless phones, security system cameras, other Wi-Fi networks, and some Bluetooth devices.

- Verify that the print driver is installed on the computer.
- Verify that you have selected the correct printer port.
- Verify that the computer and printer connect to the same Wi-Fi network.
- For Mac computers running OS X, verify that the Wi-Fi router supports Bonjour.

The printer does not print after the wireless configuration completes

1. Make sure that the printer is turned on and in the ready state.
2. Turn off any third-party firewalls on your computer.
3. Make sure that the wireless network is working correctly.
4. Make sure that your computer is working correctly. If necessary, restart the computer.
5. Verify that you can open the printer EWS from a computer on the network.

The printer does not print, and the computer has a third-party firewall installed

1. Update the firewall with the most recent update available from the manufacturer.
2. If programs request firewall access when you install the printer or try to print, make sure you allow the programs to run.
3. Temporarily turn off the firewall, and then install the wireless printer on the computer. Enable the firewall when you have completed the wireless installation.

The wireless connection does not work after moving the wireless router or printer

1. Make sure that the router or printer connects to the same network that your computer connects to.
2. Print an Information report.
3. Compare the service set identifier (SSID) on the information report to the SSID in the printer configuration for the computer.
4. If the numbers are not the same, the devices are not connecting to the same network. Reconfigure the wireless setup for the printer.

Cannot connect more devices to the wireless printer (Wi-Fi Direct)

1. Make sure that the other computers are within the wireless range and that no obstacles block the signal. For most networks, the wireless range is within 30 m (100 ft) of the wireless access point.
2. Make sure that the printer is turned on and in the ready state.
3. Make sure there are not more than 5 concurrent Wi-Fi Direct users.
4. Turn off any third-party firewalls on your computer.
5. Make sure that the wireless network is working correctly.
6. Make sure that your computer is working correctly. If necessary, restart the computer.

The wireless printer loses communication when connected to a VPN

Typically, you cannot connect to a VPN and other networks at the same time.

The network does not appear in the wireless networks list

- Make sure the wireless router is turned on and has power.
- The network might be hidden.
- Make sure that the printer is within wireless range of the wireless router, and that there are no obstacles blocking the signal.
- The printer operates on the 2.4 GHz and 5 GHz wireless bands.
- Refresh the wireless networks list.
- Try restarting the printer.

The wireless network is not functioning

1. To verify if the network has lost communication, try connecting other devices to the network.
2. Test network communication by pinging the network.
   a. Open a command-line prompt on your computer.
      - For Windows, Select **Start**, Select **Run**, type `cmd`, and then press **Enter**.
      - For macOS, go to **Applications**, then **Utilities**, and open **Terminal**.
   b. Type `ping` followed by the router IP address.
   c. If the window displays round-trip times, the network is working.
3. Make sure that the router or printer connects to the same network that the computer connects to.
   a. On the printer control panel, press the **Information** button to print an Information report.
   b. Compare the service set identifier (SSID) on the information report to the SSID in the printer information for the computer.
   c. If the numbers are not the same, the devices are not connecting to the same network. Reconfigure the wireless setup for the printer.

Perform a wireless network diagnostic test

A wireless network diagnostic test can be performed using the printer control panel or the Embedded Web Server (EWS). The wireless network diagnostic test provides information about the wireless network settings.

Method 1: Perform a wireless network diagnostic test using the printer control panel

From the printer control panel, press and hold the **Information** button for 5 seconds, and then press the **Information** button and the **Resume** button at the same time.

Method 2: Print a wireless test report using the EWS

1. Open the EWS. See To access and use the EWS.
2. Select the **Tools** tab.
3. From the left menu, select **Reports**, and then select **Printer Reports**.
4. In the Print reports area, select the **Wireless Test Report** button to print the report.

Reduce interference on a wireless network

The following tips can reduce interference in a wireless network:

- Keep the wireless devices away from large metal objects, such as filing cabinets, and other electromagnetic devices, such as microwaves and cordless telephones. These objects can disrupt radio signals.
- Keep the wireless devices away from large masonry structures and other building structures. These objects can absorb radio waves and lower signal strength.
- Position the wireless router in a central location in line of sight with the wireless printers on the network.

Solve Ethernet connection problems

Check the following:

- The network is operational. The network hub, switch, or router is turned on.
- The Ethernet cable is properly connected between the printer and the router. The Ethernet cable is plugged into the Ethernet port on the printer and the light near the connector lights up when connected.
- Antivirus programs, including spyware protection programs, are not impacting your network connection to the printer. If you know that antivirus or firewall software is preventing your computer from connecting to the printer, use the HP online firewall troubleshooter to help solve the problem.

HP support

For the latest product updates and support information, visit support.hp.com. The HP online support provides a variety of options for help with your printer:

HP support

Icons	Description
	**Get software and drivers**: Download software, drivers, and firmware you need for the printer.
	**Ask the community**: Join the community forums to find solutions, ask questions, and share tips.
	**HP Diagnostic Tools**: Use HP online tools to detect your printer and find recommended solutions.

Contact HP

If you need help from an HP technical support representative to solve a problem, visit support.hp.com. The following contact options are available at no cost for in-warranty customers (HP agent-assisted support for out-of-warranty customers may require a fee):

Icons	Description
	Chat with an HP support agent or the HP Virtual Agent online.
	Call an HP support agent.

When contacting HP Support, be prepared to provide the following information:

- Product name (located on the printer)
- Product number (located on a label inside the printer)
- Serial number (located on a label inside the printer)

Register printer

By taking just a few minutes to register, you can enjoy quicker service, more efficient support, and product support alerts.

If you did not register your printer while installing the software, you can register now at register.hp.com.

Additional warranty options

Extended service plans are available for the printer at additional cost. Go to support.hp.com, select your location and language, then explore the service plan options available for your printer.

A Printer specifications

The information contained herein is subject to change without notice.

Some statements might not be applicable for your printer or all locations. For current information, visit support.hp.com. Select your location and language, find your printer, select **Product Information**, and check the product specifications for your printer.

.

Technical specifications

For more information, visit support.hp.com, select your location and language, find your printer, select **Product Information**, and then select **Product specifications**.

System requirements

For information about software and system requirements or future operating system releases and support, visit support.hp.com and find your printer.

Printer dimensions

Dimensions for the printer (d/dw model)

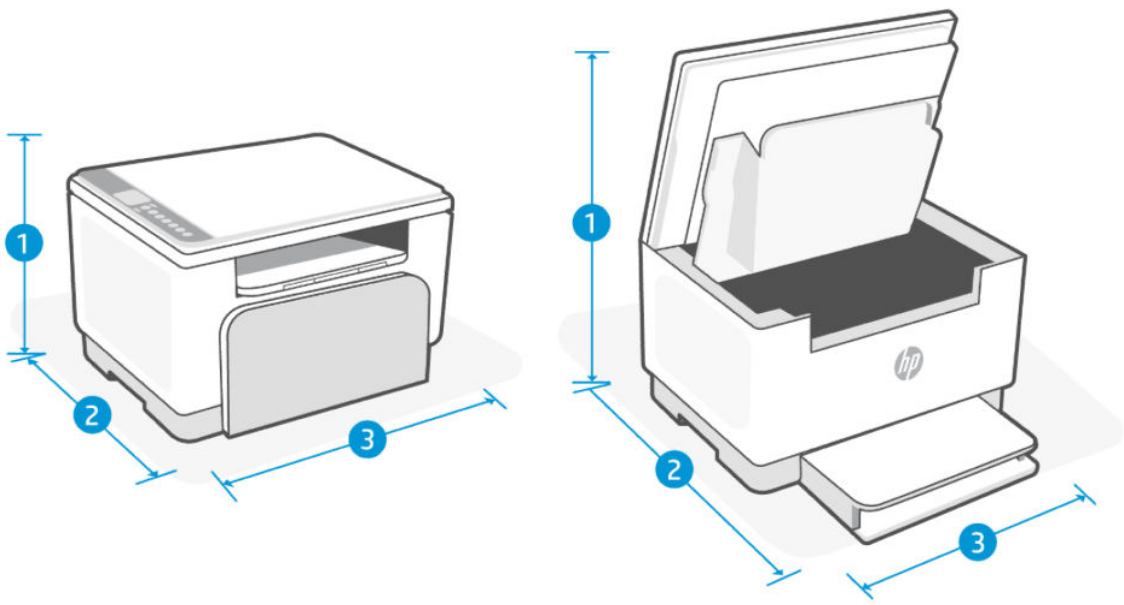

Dimensions for the printer (d/dw model)

Measurement	Printer fully closed	Printer fully open
1. Height	242 mm (9.52 in)	419 mm (16.49 in)

Dimensions for the printer (d/dw model) (continued)

Measurement	Printer fully closed	Printer fully open
2. Depth	299 mm (11.77 in)	420 mm (16.53 in)
3. Width	368 mm (14.48 in)	368 mm (14.48 in)
Weight (with cartridges)	7.7 kg (17 lb)	

Dimensions for the printer (sdn/sdw model)

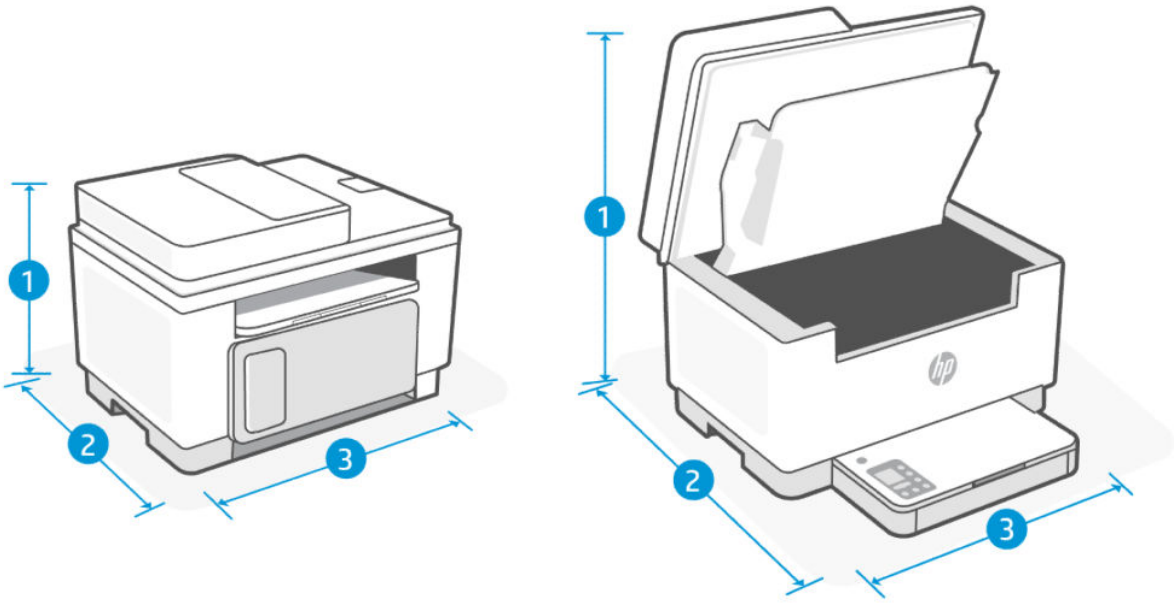

Dimensions for the printer (sdn/sdw model)

Measurement	Printer fully closed	Printer fully open
1. Height	295 mm (11.62 in)	453 mm (17.83 in)
2. Depth	308 mm (12.12 in)	468 mm (18.42 in)
3. Width	418 mm (16.45 in)	418 mm (16.45 in)
Weight (with cartridges)	9.4 kg (20.7 lb)	

Power consumption, electrical specifications, and acoustic emissions

See support.hp.com for current information.

⚠ CAUTION: Power requirements are based on the location where the printer is sold. Do not convert operating voltages. This will damage the printer and void the printer warranty.

Operating-environment range

Operating-environment range

Environment	Recommended	Allowed
Temperature	17.5° to 25°C (63.5° to 77°F)	15° to 32.5°C (59° to 90.5°F)
Operating humidity	30% to 70% relative humidity (RH), non-condensing	10% to 80% (RH), non-condensing
Relative humidity	20% to 70% relative humidity (RH), non-condensing	10% to 80% (RH), non-condensing

Warning icons

Warning icon definitions: The following warning icons may appear on HP products. Apply appropriate caution where applicable.

-  Caution: Electric shock
-  Caution: Hot surface
-  Caution: Keep body parts away from moving parts
-  Caution: Sharp edge in close proximity
-  Warning

Laser Warning



CAUTION - CLASS 3B INVISIBLE LASER RADIATION WHEN OPEN. AVOID EXPOSURE TO THE BEAM.

ATTENTION - RAYONNEMENT LASER INVISIBLE DE ÇLASSE 3B EN CAS D'OUVERTURE. ÉVITEZ L'EXPOSITION AU FAISCEAU.

VORSICHT - UNSICHTBARE LASERSTRAHLUNG KLASSE 3B, WENN ABDECKUNG GEÖFFNET. NICHT DEM STRAHL AUSSETZEN.

PRECAUCIÓN – RADIACIÓN LÁSER INVISIBLE DE CLASE 3B PRESENTE AL ABRIR. EVITE LA EXPOSICIÓN AL HAZ.

VARNING - OSYNLIG LASERSTRÅLNING KLASS 3B VID ÖPPEN LUCKA UNDVIK EXPONERING FÖR LASERSTRÅLNINGEN.

VAROITUS - LUOKAN 3B NÄKYMÄTTÖMÄLLE LASER-SÄTEILYÄ AVATTUNA. VÄLTÄ ALTISTUMISTA SÄTEELLE.

注意 - 打开时，存在不可见的 3B 类激光辐射，请避免接触该激光束。

주 의 - 열리면 클래 3B 비가시레이저발사선이방출됩니다 . 광선에 노출을 피하십시오 .

注意 - ここを開くとクラス 3B 不可視レーザ放射が出ます。ビームに身をさらさないこと。

B Service and support

This section describes the service and support information.

Limited Warranty Statement for HP Print Cartridges, Imaging Drums, and Imaging Units for use with HP LaserJet Printers, HP Laser Printers and Samsung Branded Laser Printers

The product is covered by the HP Commercial/Limited Warranty in locations authorized for use/distribution.

For complete warranty details, see: hp.com/toner/info

HP limited warranty statement

HP limited warranty statement

HP PRODUCT	DURATION OF LIMITED WARRANTY*
HP LaserJet MFP M238-M249 Printer series	One-year limited warranty

NOTE: *Warranty and support options vary by product, location, and local legal requirements. Go to support.hp.com to learn about HP award-winning service and support options in your region. For details on the HP limited warranty policy on supplies, go to http://www.hp.com/go/learnaboutsupplies.

HP warrants to you, the end-user customer, this HP Limited Warranty applies only to HP-branded products sold or leased a) from HP Inc., its subsidiaries, affiliates, authorized resellers, authorized distributors, or country distributors; and, b) with this HP Limited Warranty, that HP hardware and accessories will be free from defects in materials and workmanship after the date of purchase, for the period specified above. If HP receives notice of such defects during the warranty period, HP will, at its option, either repair or replace products which prove to be defective. Replacement products may be either new or equivalent in performance to new. HP products presented for repair may be replaced by refurbished goods of the same type rather than being repaired. Refurbished parts may be used to repair the goods. Repair of goods may result in lost user-generated data.

HP warrants to you that HP software will not fail to execute its programming instructions after the date of purchase, for the period specified above, due to defects in material and workmanship when properly installed and used. If HP receives notice of such defects during the warranty period, HP will replace software which does not execute its programming instructions due to such defects.

HP does not warrant that the operation of HP products will be uninterrupted or error free. If HP is unable, within a reasonable time, to repair or replace any product to a condition as warranted, you will be entitled to a refund of the purchase price upon prompt return of the product.

HP products may contain remanufactured parts equivalent to new in performance or may have been subject to incidental use.

Warranty does not apply to defects resulting from (a) improper or inadequate maintenance or calibration, (b) software, interfacing, parts or supplies not supplied by HP, (c) unauthorized modification or misuse, (d)

operation outside of the published environmental specifications for the product, or (e) improper site preparation or maintenance.

TO THE EXTENT ALLOWED BY LOCAL LAW, THE ABOVE WARRANTIES ARE EXCLUSIVE AND NO OTHER WARRANTY OR CONDITION, WHETHER WRITTEN OR ORAL, IS EXPRESSED OR IMPLIED AND HP SPECIFICALLY DISCLAIMS ANY IMPLIED WARRANTIES OR CONDITIONS OF MERCHANTABILITY, SATISFACTORY QUALITY, AND FITNESS FOR A PARTICULAR PURPOSE. Some locations, states or provinces do not allow limitations on the duration of an implied warranty, so the above limitation or exclusion might not apply to you. This warranty gives you specific legal rights and you might also have other rights that vary from location to location, state to state, or province to province. Please refer to the location specific statements at the end of this document.

HP's limited warranty is valid in any location or locality where HP has a support presence for this product and where HP has marketed this product. The level of warranty service you receive may vary according to local standards. HP will not alter form, fit or function of the product to make it operate in a location for which it was never intended to function for legal or regulatory reasons.

TO THE EXTENT ALLOWED BY LOCAL LAW, THE REMEDIES IN THIS WARRANTY STATEMENT ARE YOUR SOLE AND EXCLUSIVE REMEDIES. EXCEPT AS INDICATED ABOVE, IN NO EVENT WILL HP OR ITS SUPPLIERS BE LIABLE FOR LOSS OF DATA OR FOR DIRECT, SPECIAL, INCIDENTAL, CONSEQUENTIAL (INCLUDING LOST PROFIT OR DATA), OR OTHER DAMAGE, WHETHER BASED IN CONTRACT, TORT, OR OTHERWISE. Some countries/regions, states or provinces do not allow the exclusion or limitation of incidental or consequential damages, so the above limitation or exclusion may not apply to you.

THE WARRANTY TERMS CONTAINED IN THIS STATEMENT, EXCEPT TO THE EXTENT LAWFULLY PERMITTED, DO NOT EXCLUDE, RESTRICT OR MODIFY AND ARE IN ADDITION TO THE MANDATORY STATUTORY RIGHTS APPLICABLE TO THE SALE OF THIS PRODUCT TO YOU. PLEASE REFER TO THE LOCATION SPECIFIC STATEMENTS AT THE END OF THIS DOCUMENT (IF APPLICABLE) FOR FURTHER INFORMATION ON YOUR CONSUMER RIGHTS.

Location specific terms

In some jurisdictions, you may have other statutory rights. Please see below.

Australia

Your rights as an Australian consumer are different to those stated in the document above.

You should disregard any limitations or exclusions in the above document and refer to the information below.

1. When you buy a good from HP as a consumer, the goods come with guarantees that cannot be excluded under the Australian Consumer Law. You are entitled to a replacement or refund for a major failure and for compensation for any other reasonably foreseeable loss or damage. You are also entitled to have the goods repaired or replaced if the goods fail to be of acceptable quality and the failure does not amount to a major failure.
2. This means that there is no defined warranty period for HP goods supplied to Australian consumers.
3. Instead, the goods should, for example, be fit for the purposes for which they are commonly supplied for such a period as a reasonable consumer fully acquainted with the state and condition of the goods would expect. This period may vary depending on the product.
4. You should contact HP if you are concerned that one of HP's products fails to satisfy any of the guarantees listed below. HP will discuss with you the specific nature and circumstances of that good and whether the particular fault/issue falls within the scope of the statutory guarantees.

   Nothing in HP's Limited Warranty excludes, restricts, or modifies any condition, warranty, guarantee, right or remedy you may have at law (including a consumer guarantee under the Australian Consumer Law) which cannot be lawfully excluded or limited.

The relevant guarantees are as follows:

1. **Quality** — goods supplied by HP must be of acceptable quality. The test for acceptable quality is whether a reasonable consumer, fully aware of the state and condition of the goods, would find them:
   - safe, durable, and free from defects;
   - acceptable in appearance and finish; and
   - fit for all the purposes for which goods of that kind are commonly supplied.

     This must take into account the nature and price of the goods, and any statements on packaging or labeling.
2. **Disclosed Purpose** — goods or services supplied by HP that HP represents are reasonably fit for a purpose expressly disclosed by a consumer must be reasonably fit for that purpose.
3. **Description** — goods supplied by HP must match the description provided by HP.
4. **Sample** — goods supplied by HP must match any sample shown to you by HP.
5. **Title** — a consumer who purchases a good from HP must receive clear title to the good.
6. **Due care and skill** — services provided to you by HP must be provided with due care and skill.
7. **Express warranties** — HP will be legally required to comply with the express warranty that is set out in its terms and conditions.
8. **Reasonable time** — repair services provided by HP must be provided within a reasonable time.

If you think that you are entitled to any of the above remedies or any remedy under the HP Worldwide Limited Warranty and Technical Support Document, please contact HP:

HP PPS Australia Pty Ltd

Rhodes Corporate Park, Building F, Level 5

1 Homebush Bay Drive

Rhodes, NSW 2138

Australia

To initiate a support request, please use the numbers below or visit www.hp.com.au and select the “Customer Service” option for the most current list of phone support numbers.

Product	Phone
Support for all HP Products except those listed separately below	13 10 47 If dialing internationally: +61 2 8278-1039
DeskJet, Office Jet, PSC, All-in-One, Photosmart & Personal LaserJet Series 1000, P1000, M1000 and Colour LaserJet CP1000 Series and model CM1415	1300 721 147 If dialing internationally: +61 2 8934 4380

For further information on consumer rights, visit www.consumerlaw.gov.au and www.accc.gov.au.

New Zealand

In New Zealand, the hardware and software comes with guarantees that cannot be excluded under the New Zealand consumer law. In New Zealand, Consumer Transaction means a transaction involving a person who

is purchasing goods for personal, domestic or household use or consumption and not for the purpose of a business. New Zealand consumers who are purchasing goods for personal, domestic or household use or consumption and not for the purpose of a business ("New Zealand Consumers") are entitled to repair, replacement or refund for a failure and compensation for other reasonably foreseeable loss or damage. A New Zealand Consumer (as defined above) may recover the costs of returning the product to the place of purchase if there is a breach of the New Zealand consumer law; furthermore, if it will be of significant cost to the New Zealand Consumer to return the goods to HP then HP will collect such goods at its own cost.

Product	Phone
Support for all HP Products except those listed separately below	0800 449 553 If dialing internationally: +61 2 8031-8317
DeskJet, Office Jet, PSC, All-in-One, Photosmart & Personal LaserJet Series 1000, P1000, M1000 and Colour LaserJet CP1000 Series and model CM1415	0800 441 147 If dialing internationally: +61 2 8934 4380

UK, Ireland, and Malta

The HP Limited Warranty is a commercial guarantee voluntarily provided by HP. The name and address of the HP entity responsible for the performance of the HP Limited Warranty in your country/region is as follows:

UK: HP Inc UK Limited, Cain Road, Amen Corner, Bracknell, Berkshire, RG12 1HN

Ireland: Hewlett-Packard Ireland Limited, Liffey Park Technology Campus, Barnhall Road, Leixlip, Co.Kildare

Malta: Hewlett-Packard Europe B.V., Amsterdam, Meyrin Branch, Route du Nant-d'Avril 150, 1217 Meyrin, Switzerland

United Kingdom: The HP Limited Warranty benefits apply in addition to any legal rights to a guarantee from seller of nonconformity of goods with the contract of sale. These rights expire six years from delivery of goods for products purchased in England or Wales and five years from delivery of goods for products purchased in Scotland. However various factors may impact your eligibility to receive these rights. For further information, please consult the following link: Consumer Legal Guarantee (https://www.hp.com/go/eu-legal) or you may visit the European Consumer Centers website (ec.europa.eu/info/live-work-travel-eu/consumers/resolve-your-consumer-complaint/european-consumer-centres-network-ecc-net_en). Consumers have the right to choose whether to claim service under the HP Limited Warranty or against the seller under the legal guarantee.

Ireland: The HP Limited Warranty benefits apply in addition to any statutory rights from seller in relation to nonconformity of goods with the contract of sale. However various factors may impact your eligibility to receive these rights. Consumer statutory rights are not limited or affected in any manner by HP Care Pack. For further information, please consult the following link: Consumer Legal Guarantee (https://www.hp.com/go/eu-legal) or you may visit the European Consumer Centers website (ec.europa.eu/info/live-work-travel-eu/consumers/resolve-your-consumer-complaint/european-consumer-centres-network-ecc-net_en). Consumers have the right to choose whether to claim service under the HP Limited Warranty or against the seller under the legal guarantee.

Malta: The HP Limited Warranty benefits apply in addition to any legal rights to a two-year guarantee from seller of nonconformity of goods with the contract of sale; however various factors may impact your eligibility to receive these rights. Consumer statutory rights are not limited or affected in any manner by the HP Limited Warranty. For further information, please consult the following link: Consumer Legal Guarantee (https://www.hp.com/go/eu-legal) or you may visit the European Consumer Centers website (ec.europa.eu/info/live-work-travel-eu/consumers/resolve-your-consumer-complaint/european-consumer-centres-network-ecc-net_en). Consumers have the right to choose whether to claim service under the HP Limited Warranty or against the seller under two-year legal guarantee.

Austria, Belgium, Germany, and Luxemburg

Die beschränkte HP Herstellergarantie ist eine von HP auf freiwilliger Basis angebotene kommerzielle Garantie. Der Name und die Adresse der HP Gesellschaft, die in Ihrem Land für die Gewährung der beschränkten HP Herstellergarantie verantwortlich ist, sind wie folgt:

Deutschland: HP Deutschland GmbH, Schickardstr. 32, D-71034 Böblingen

Österreich: HP Austria GmbH., Technologiestrasse 5, A-1120 Wien

Luxemburg: Hewlett-Packard Luxembourg S.C.A., 75, Parc d'Activités Capellen, Rue Pafebruc, L-8308 Capellen

Belgien: HP Belgium BVBA, Hermeslaan 1A, B-1831 Diegem

Die Rechte aus der beschränkten HP Herstellergarantie gelten zusätzlich zu den gesetzlichen Ansprüchen wegen Sachmängeln auf eine zweijährige Gewährleistung ab dem Lieferdatum. Ob Sie Anspruch auf diese Rechte haben, hängt von zahlreichen Faktoren ab. Die Rechte des Kunden sind in keiner Weise durch die beschränkte HP Herstellergarantie eingeschränkt bzw. betroffen. Weitere Hinweise finden Sie auf der folgenden Website: Gewährleistungsansprüche für Verbraucher (https://www.hp.com/go/eu-legal) oder Sie können die Website des Europäischen Verbraucherzentrums (ec.europa.eu/info/live-work-travel-eu/consumers/resolve-your-consumer-complaint/european-consumer-centres-network-ecc-net_en) besuchen. Verbraucher haben das Recht zu wählen, ob sie eine Leistung von HP gemäß der beschränkten HP Herstellergarantie in Anspruch nehmen oder ob sie sich gemäß der gesetzlichen zweijährigen Haftung für Sachmängel (Gewährleistung) sich an den jeweiligen Verkäufer wenden.

Belgium, France, and Luxemburg

La garantie limitée HP est une garantie commerciale fournie volontairement par HP. Voici les coordonnées de l'entité HP responsable de l'exécution de la garantie limitée HP dans votre pays:

France: HP France SAS, société par actions simplifiée identifiée sous le numéro 448 694 133 RCS Evry, 1 Avenue du Canada, 91947, Les Ulis

G.D. Luxembourg: Hewlett-Packard Luxembourg S.C.A., 75, Parc d'Activités Capellen, Rue Pafebruc, L-8308 Capellen

Belgique: HP Belgium BVBA, Hermeslaan 1A, B-1831 Diegem

France: Les avantages de la garantie limitée HP s'appliquent en complément des droits dont vous disposez au titre des garanties légales applicables dont le bénéfice est soumis à des conditions spécifiques. Vos droits en tant que consommateur au titre de la garantie légale de conformité mentionnée aux articles L. 211-4 à L. 211-13 du Code de la Consommation et de celle relatives aux défauts de la chose vendue, dans les conditions prévues aux articles 1641 à 1648 et 2232 du Code de Commerce ne sont en aucune façon limités ou affectés par la garantie limitée HP. Pour de plus amples informations, veuillez consulter le lien suivant : Garanties légales accordées au consommateur (https://www.hp.com/go/eu-legal). Vous pouvez également consulter le site Web des Centres européens des consommateurs (ec.europa.eu/info/live-work-travel-eu/consumers/resolve-your-consumer-complaint/european-consumer-centres-network-ecc-net_en). Les consommateurs ont le droit de choisir d'exercer leurs droits au titre de la garantie limitée HP, ou auprès du vendeur au titre des garanties légales applicables mentionnées ci-dessus.

POUR RAPPEL:

Garantie Légale de Conformité:

« Le vendeur est tenu de livrer un bien conforme au contrat et répond des défauts de conformité existant lors de la délivrance.

Il répond également des défauts de conformité résultant de l'emballage, des instructions de montage ou de l'installation lorsque celle-ci a été mise à sa charge par le contrat ou a été réalisée sous sa responsabilité ».

Article L211-5 du Code de la Consommation:

« Pour être conforme au contrat, le bien doit:

1° Etre propre à l'usage habituellement attendu d'un bien semblable et, le cas échéant:

- correspondre à la description donnée par le vendeur et posséder les qualités que celui-ci a présentées à l'acheteur sous forme d'échantillon ou de modèle;

- présenter les qualités qu'un acheteur peut légitimement attendre eu égard aux déclarations publiques faites par le vendeur, par le producteur ou par son représentant, notamment dans la publicité ou l'étiquetage;

2° Ou présenter les caractéristiques définies d'un commun accord par les parties ou être propre à tout usage spécial recherché par l'acheteur, porté à la connaissance du vendeur et que ce dernier a accepté ».

Article L211-12 du Code de la Consommation:

« L'action résultant du défaut de conformité se prescrit par deux ans à compter de la délivrance du bien ».

Garantie des vices cachés

Article 1641 du Code Civil : *« Le vendeur est tenu de la garantie à raison des défauts cachés de la chose vendue qui la rendent impropre à l'usage auquel on la destine, ou qui diminuent tellement cet usage que l'acheteur ne l'aurait pas acquise, ou n'en aurait donné qu'un moindre prix, s'il les avait connus. »*

Article 1648 alinéa 1 du Code Civil:

« L'action résultant des vices rédhibitoires doit être intentée par l'acquéreur dans un délai de deux ans à compter de la découverte du vice. »

G.D. Luxembourg et Belgique: Les avantages de la garantie limitée HP s'appliquent en complément des droits dont vous disposez au titre de la garantie de non-conformité des biens avec le contrat de vente. Cependant, de nombreux facteurs peuvent avoir un impact sur le bénéfice de ces droits. Vos droits en tant que consommateur au titre de ces garanties ne sont en aucune façon limités ou affectés par la garantie limitée HP. Pour de plus amples informations, veuillez consulter le lien suivant : Garanties légales accordées au consommateur (https://www.hp.com/go/eu-legal) ou vous pouvez également consulter le site Web des Centres européens des consommateurs (ec.europa.eu/info/live-work-travel-eu/consumers/resolve-your-consumer-complaint/european-consumer-centres-network-ecc-net_en). Les consommateurs ont le droit de choisir de réclamer un service sous la garantie limitée HP ou auprès du vendeur au cours d'une garantie légale de deux ans.

Italy

La Garanzia limitata HP è una garanzia commerciale fornita volontariamente da HP. Di seguito sono indicati nome e indirizzo della società HP responsabile della fornitura dei servizi coperti dalla Garanzia limitata HP nel vostro Paese:

Italia: HP Italy S.r.l., Via G. Di Vittorio 9, 20063 Cernusco S/Naviglio

I vantaggi della Garanzia limitata HP vengono concessi ai consumatori in aggiunta ai diritti derivanti dalla garanzia di due anni fornita dal venditore in caso di non conformità dei beni rispetto al contratto di vendita. Tuttavia, diversi fattori possono avere un impatto sulla possibilita' di beneficiare di tali diritti. I diritti spettanti ai consumatori in forza della garanzia legale non sono in alcun modo limitati, né modificati dalla Garanzia limitata HP. Per ulteriori informazioni, si prega di consultare il seguente link: Garanzia legale per i clienti (https://www.hp.com/go/eu-legal), oppure visitare il sito Web dei Centri europei per

i consumatori (ec.europa.eu/info/live-work-travel-eu/consumers/resolve-your-consumer-complaint/european-consumer-centres-network-ecc-net_en). I consumatori hanno il diritto di scegliere se richiedere un servizio usufruendo della Garanzia limitata HP oppure rivolgendosi al venditore per far valere la garanzia legale di due anni.

Spain

Su Garantía limitada de HP es una garantía comercial voluntariamente proporcionada por HP. El nombre y dirección de las entidades HP que proporcionan la Garantía limitada de HP (garantía comercial adicional del fabricante) en su país es:

España: Hewlett-Packard Española S.L. Calle Vicente Aleixandre, 1 Parque Empresarial Madrid - Las Rozas, E-28232 Madrid

Los beneficios de la Garantía limitada de HP son adicionales a la garantía legal de 2 años a la que los consumidores tienen derecho a recibir del vendedor en virtud del contrato de compraventa; sin embargo, varios factores pueden afectar su derecho a recibir los beneficios bajo dicha garantía legal. A este respecto, la Garantía limitada de HP no limita o afecta en modo alguno los derechos legales del consumidor (https://www.hp.com/go/eu-legal). Para más información, consulte el siguiente enlace: Garantía legal del consumidor o puede visitar el sitio web de los Centros europeos de los consumidores (ec.europa.eu/info/live-work-travel-eu/consumers/resolve-your-consumer-complaint/european-consumer-centres-network-ecc-net_en). Los clientes tienen derecho a elegir si reclaman un servicio acogiéndose a la Garantía limitada de HP o al vendedor de conformidad con la garantía legal de dos años.

Denmark

Den begrænsede HP-garanti er en garanti, der ydes frivilligt af HP. Navn og adresse på det HP-selskab, der er ansvarligt for HP's begrænsede garanti i dit land, er som følger:

Danmark: HP Inc Danmark ApS, Engholm Parkvej 8, 3450, Allerød

Den begrænsede HP-garanti gælder i tillæg til eventuelle juridiske rettigheder, for en toårig garanti fra sælgeren af varer, der ikke er i overensstemmelse med salgsaftalen, men forskellige faktorer kan dog påvirke din ret til at opnå disse rettigheder. Forbrugerens lovbestemte rettigheder begrænses eller påvirkes ikke på nogen måde af den begrænsede HP-garanti. Se nedenstående link for at få yderligere oplysninger: Forbrugerens juridiske garanti (https://www.hp.com/go/eu-legal) eller du kan besøge De Europæiske Forbrugercentres websted (ec.europa.eu/info/live-work-travel-eu/consumers/resolve-your-consumer-complaint/european-consumer-centres-network-ecc-net_en). Forbrugere har ret til at vælge, om de vil gøre krav på service i henhold til HP's begrænsede garanti eller hos sælger i henhold til en toårig juridisk garanti.

Norway

HPs garanti er en begrenset og kommersiell garanti som HP selv har valgt å tilby. Følgende lokale selskap innestår for garantien:

Norge: HP Norge AS, Rolfbuktveien 4b, 1364 Fornebu

HPs garanti kommer i tillegg til det mangelsansvar HP har i henhold til norsk forbrukerkjøpslovgivning, hvor reklamasjonsperioden kan være to eller fem år, avhengig av hvor lenge salgsgjenstanden var ment å vare. Ulike faktorer kan imidlertid ha betydning for om du kvalifiserer til å kreve avhjelp iht slikt mangelsansvar. Forbrukerens lovmessige rettigheter begrenses ikke av HPs garanti. Hvis du vil ha mer informasjon, kan du klikke på følgende kobling: Juridisk garanti for forbruker (https://www.hp.com/go/eu-legal) eller du kan besøke nettstedet til de europeiske forbrukersentrene (ec.europa.eu/info/live-work-travel-eu/consumers/resolve-your-consumer-complaint/european-consumer-centres-network-ecc-net_en). Forbrukere har retten til å velge å kreve service under HPs garanti eller iht selgerens lovpålagte mangelsansvar.

Sweden

HP:s begränsade garanti är en kommersiell garanti som tillhandahålls frivilligt av HP. Namn och adress till det HP-företag som ansvarar för HP:s begränsade garanti i ditt land är som följer:

Sverige: HP PPS Sverige AB, SE-169 73 Stockholm

Fördelarna som ingår i HP:s begränsade garanti gäller utöver de lagstadgade rättigheterna till tre års garanti från säljaren angående varans bristande överensstämmelse gentemot köpeavtalet, men olika faktorer kan påverka din rätt att utnyttja dessa rättigheter. Konsumentens lagstadgade rättigheter varken begränsas eller påverkas på något sätt av HP:s begränsade garanti. Mer information får du om du följer denna länk: Lagstadgad garanti för konsumenter (https://www.hp.com/go/eu-legal) eller så kan du gå till European Consumer Centers webbplats (ec.europa.eu/info/live-work-travel-eu/consumers/resolve-your-consumer-complaint/european-consumer-centres-network-ecc-net_en). Konsumenter har rätt att välja om de vill ställa krav enligt HP:s begränsade garanti eller på säljaren enligt den lagstadgade treåriga garantin.

Portugal

A Garantia Limitada HP é uma garantia comercial fornecida voluntariamente pela HP. O nome e a morada da entidade HP responsável pela prestação da Garantia Limitada HP no seu país são os seguintes:

Portugal: HPCP – Computing and Printing Portugal, Unipessoal, Lda., Edificio D. Sancho I, Quinta da Fonte, Porto Salvo, Lisboa, Oeiras, 2740 244

As vantagens da Garantia Limitada HP aplicam-se cumulativamente com quaisquer direitos decorrentes da legislação aplicável à garantia de dois anos do vendedor, relativa a defeitos do produto e constante do contrato de venda. Existem, contudo, vários fatores que poderão afetar a sua elegibilidade para beneficiar de tais direitos. Os direitos legalmente atribuídos aos consumidores não são limitados ou afetados de forma alguma pela Garantia Limitada HP. Para mais informações, consulte a ligação seguinte: Garantia legal do consumidor (https://www.hp.com/go/eu-legal) ou visite o Web site da Rede dos Centros Europeus do Consumidor (ec.europa.eu/info/live-work-travel-eu/consumers/resolve-your-consumer-complaint/european-consumer-centres-network-ecc-net_en). Os consumidores têm o direito de escolher se pretendem reclamar assistência ao abrigo da Garantia Limitada HP ou contra o vendedor ao abrigo de uma garantia jurídica de dois anos.

Greece and Cyprus

Η Περιορισμένη εγγύηση HP είναι μια εμπορική εγγύηση η οποία παρέχεται εθελοντικά από την HP. Η επωνυμία και η διεύθυνση του νομικού προσώπου HP που παρέχει την Περιορισμένη εγγύηση HP στη χώρα σας είναι η εξής:

Ελλάδα /Κύπρος: HP Printing and Personal Systems Hellas EPE, Tzavella 1-3, 15232 Chalandri, Attiki

Ελλάδα /Κύπρος: HP Συστήματα Εκτύπωσης και Προσωπικών Υπολογιστών Ελλάς Εταιρεία Περιορισμένης Ευθύνης, Tzavella 1-3, 15232 Chalandri, Attiki

Τα προνόμια της Περιορισμένης εγγύησης HP ισχύουν επιπλέον των νόμιμων δικαιωμάτων για διετή εγγύηση έναντι του Πωλητή για τη μη συμμόρφωση των προϊόντων με τις συνομολογημένες συμβατικά ιδιότητες, ωστόσο η άσκηση των δικαιωμάτων σας αυτών μπορεί να εξαρτάται από διάφορους παράγοντες. Τα νόμιμα δικαιώματα των καταναλωτών δεν περιορίζονται ούτε επηρεάζονται καθ' οιονδήποτε τρόπο από την Περιορισμένη εγγύηση HP. Για περισσότερες πληροφορίες, συμβουλευτείτε την ακόλουθη τοποθεσία web: Νόμιμη εγγύηση καταναλωτή (https://www.hp.com/go/eu-legal) ή μπορείτε να επισκεφτείτε την τοποθεσία web των Ευρωπαϊκών Κέντρων Καταναλωτή (ec.europa.eu/info/live-work-travel-eu/consumers/resolve-your-consumer-complaint/european-consumer-centres-network-ecc-net_en). Οι καταναλωτές έχουν το δικαίωμα να επιλέξουν αν θα αξιώσουν την υπηρεσία στα πλαίσια της Περιορισμένης εγγύησης HP ή από τον πωλητή στα πλαίσια της νόμιμης εγγύησης δύο ετών.

Hungary

A HP korlátozott jótállás egy olyan kereskedelmi jótállás, amelyet a HP a saját elhatározásából biztosít. Az egyes országokban a HP mint gyártó által vállalt korlátozott jótállást biztosító HP vállalatok neve és címe:

Magyarország: HP Inc Magyarország Kft., H-1117 Budapest, Alíz utca 1.

A HP korlátozott jótállásban biztosított jogok azokon a jogokon felül illetik meg Önt, amelyek a termékeknek az adásvételi szerződés szerinti minőségére vonatkozó kétéves, jogszabályban foglalt eladói szavatosságból, továbbá ha az Ön által vásárolt termékre alkalmazandó, a jogszabályban foglalt kötelező eladói jótállásból erednek, azonban számos körülmény hatással lehet arra, hogy ezek a jogok Önt megilletik-e. További információért kérjük, keresse fel a következő webhelyet: Jogi Tájékoztató Fogyasztóknak (https://www.hp.com/go/eu-legal) vagy látogassa meg az Európai Fogyasztói Központok webhelyét (ec.europa.eu/info/live-work-travel-eu/consumers/resolve-your-consumer-complaint/european-consumer-centres-network-ecc-net_en). A fogyasztóknak jogában áll, hogy megválasszák, hogy a jótállással kapcsolatos igényüket a HP korlátozott jótállás alapján vagy a kétéves, jogszabályban foglalt eladói szavatosság, illetve, ha alkalmazandó, a jogszabályban foglalt kötelező eladói jótállás alapján érvényesítik.

Czech Republic

Omezená záruka HP je obchodní zárukou dobrovolně poskytovanou společností HP. Názvy a adresy společností skupiny HP, které odpovídají za plnění omezené záruky HP ve vaší zemi, jsou následující:

Česká republika: HP Inc Czech Republic s. r. o., Za Brumlovkou 5/1559, 140 00 Praha 4

Výhody, poskytované omezenou zárukou HP, se uplatňuji jako doplněk k jakýmkoli právním nárokům na dvouletou záruku poskytnutou prodejcem v případě nesouladu zboží s kupní smlouvou. Váš nárok na uznání těchto práv však může záviset na mnohých faktorech. Omezená záruka HP žádným způsobem neomezuje ani neovlivňuje zákonná práva zákazníka. Další informace získáte kliknutím na následující odkaz: Zákonná záruka spotřebitele (https://www.hp.com/go/eu-legal) případně můžete navštívit webové stránky Evropského spotřebitelského centra (ec.europa.eu/info/live-work-travel-eu/consumers/resolve-your-consumer-complaint/european-consumer-centres-network-ecc-net_en). Spotřebitelé mají právo se rozhodnout, zda chtějí službu reklamovat v rámci omezené záruky HP nebo v rámci zákonem stanovené dvouleté záruky u prodejce.

Slovakia

Obmedzená záruka HP je obchodná záruka, ktorú spoločnosť HP poskytuje dobrovoľne. Meno a adresa subjektu HP, ktorý zabezpečuje plnenie vyplývajúce z Obmedzenej záruky HP vo vašej krajine:

Slovenská republika: HP Inc Slovakia, s.r.o., Galvaniho 7, 821 04 Bratislava

Výhody Obmedzenej záruky HP sa uplatnia vedľa prípadných zákazníkových zákonných nárokov voči predávajúcemu z vád, ktoré spočívajú v nesúlade vlastností tovaru s jeho popisom podľa predmetnej zmluvy. Možnosť uplatnenia takých prípadných nárokov však môže závisieť od rôznych faktorov. Služby Obmedzenej záruky HP žiadnym spôsobom neobmedzujú ani neovplyvňujú zákonné práva zákazníka, ktorý je spotrebiteľom. Ďalšie informácie nájdete na nasledujúcom prepojení: Zákonná záruka spotrebiteľa (https://www.hp.com/go/eu-legal), prípadne môžete navštíviť webovú lokalitu európskych zákazníckych stredísk (ec.europa.eu/info/live-work-travel-eu/consumers/resolve-your-consumer-complaint/european-consumer-centres-network-ecc-net_en). Spotrebitelia majú právo zvoliť si, či chcú uplatniť servis v rámci Obmedzenej záruky HP alebo počas zákonnej dvojročnej záručnej lehoty u predajcu.

Poland

Ograniczona gwarancja HP to komercyjna gwarancja udzielona dobrowolnie przez HP. Nazwa i adres podmiotu HP odpowiedzialnego za realizację Ograniczonej gwarancji HP w Polsce:

Polska: HP Inc Polska sp. z o.o., Szturmowa 2a, 02-678 Warszawa, wpisana do rejestru przedsiębiorców prowadzonego przez Sąd Rejonowy dla m.st. Warszawy w Warszawie, XIII Wydział Gospodarczy Krajowego Rejestru Sądowego, pod numerem KRS 0000546115, NIP 5213690563, REGON 360916326, GIOŚ E0020757WZBW, kapitał zakładowy 480.000 PLN.

Świadczenia wynikające z Ograniczonej gwarancji HP stanowią dodatek do praw przysługujących nabywcy w związku z dwuletnią odpowiedzialnością sprzedawcy z tytułu niezgodności towaru z umową (rękojmia). Niemniej, na możliwość korzystania z tych praw mają wpływ różne czynniki. Ograniczona gwarancja HP w żaden sposób nie ogranicza praw konsumenta ani na nie nie wpływa. Więcej informacji można znaleźć pod następującym łączem: Gwarancja prawna konsumenta (https://www.hp.com/go/eu-legal), można także odwiedzić stronę internetową Europejskiego Centrum Konsumenckiego (ec.europa.eu/info/live-work-travel-eu/consumers/resolve-your-consumer-complaint/european-consumer-centres-network-ecc-net_en). Konsumenci mają prawo wyboru co do możliwosci skorzystania albo z usług gwarancyjnych przysługujących w ramach Ograniczonej gwarancji HP albo z uprawnień wynikających z dwuletniej rękojmi w stosunku do sprzedawcy.

Bulgaria

Ограничената гаранция на HP представлява търговска гаранция, доброволно предоставяна от HP. Името и адресът на дружеството на HP за вашата страна, отговорно за предоставянето на гаранционната поддръжка в рамките на Ограничената гаранция на HP, са както следва:

HP Inc Bulgaria EOOD (Ейч Пи Инк България ЕООД), гр. София 1766, район р-н Младост, бул. Околовръстен Път No 258, Бизнес Център Камбаните

Предимствата на Ограничената гаранция на HP се прилагат в допълнение към всички законови права за двугодишна гаранция от продавача при несъответствие на стоката с договора за продажба. Въпреки това, различни фактори могат да окажат влияние върху условията за получаване на тези права. Законовите права на потребителите не са ограничени или засегнати по никакъв начин от Ограничената гаранция на HP. За допълнителна информация, моля вижте Правната гаранция на потребителя (https://www.hp.com/go/eu-legal) или посетете уебсайта на Европейския потребителски център (ec.europa.eu/info/live-work-travel-eu/consumers/resolve-your-consumer-complaint/european-consumer-centres-network-ecc-net_en). Потребителите имат правото да избират дали да претендират за извършване на услуга в рамките на Ограничената гаранция на HP или да потърсят такава от търговеца в рамките на двугодишната правна гаранция.

Romania

Garanția limitată HP este o garanție comercială furnizată în mod voluntar de către HP. Numele și adresa entității HP răspunzătoare de punerea în aplicare a Garanției limitate HP în țara dumneavoastră sunt următoarele:

România: HP Inc Romania SRL, 5 Fabrica de Glucoza Str., Building F, Ground Floor and Floor 8, 2nd District, Bucureşti

Beneficiile Garanției limitate HP se aplică suplimentar față de orice drepturi privind garanția de doi ani oferită de vânzător pentru neconformitatea bunurilor cu contractul de vânzare; cu toate acestea, diverşi factori pot avea impact asupra eligibilităţii dvs. de a beneficia de aceste drepturi. Drepturile legale ale consumatorului nu sunt limitate sau afectate în vreun fel de Garanția limitată HP. Pentru informaţii suplimentare consultaţi următorul link: garanția acordată consumatorului prin lege (https://www.hp.com/go/eu-legal) sau puteți accesa site-ul Centrul European al Consumatorilor (ec.europa.eu/info/live-work-travel-eu/consumers/resolve-your-consumer-complaint/european-consumer-centres-network-ecc-net_en). Consumatorii au dreptul să aleagă dacă să pretindă despăgubiri în cadrul Garanției limitate HP sau de la vânzător, în cadrul garanției legale de doi ani.

Belgium and the Netherlands

De Beperkte Garantie van HP is een commerciële garantie vrijwillig verstrekt door HP. De naam en het adres van de HP-entiteit die verantwoordelijk is voor het uitvoeren van de Beperkte Garantie van HP in uw land is als volgt:

Nederland: HP Nederland B.V., Startbaan 16, 1187 XR Amstelveen

België: HP Belgium BVBA, Hermeslaan 1A, B-1831 Diegem

De voordelen van de Beperkte Garantie van HP vormen een aanvulling op de wettelijke garantie voor consumenten gedurende twee jaren na de levering te verlenen door de verkoper bij een gebrek aan conformiteit van de goederen met de relevante verkoopsovereenkomst. Niettemin kunnen diverse factoren een impact hebben op uw eventuele aanspraak op deze wettelijke rechten. De wettelijke rechten van de consument worden op geen enkele wijze beperkt of beïnvloed door de Beperkte Garantie van HP. Raadpleeg voor meer informatie de volgende webpagina: Wettelijke garantie van de consument (https://www.hp.com/go/eu-legal) of u kan de website van het Europees Consumenten Centrum bezoeken (ec.europa.eu/info/live-work-travel-eu/consumers/resolve-your-consumer-complaint/european-consumer-centres-network-ecc-net_en). Consumenten hebben het recht om te kiezen tussen enerzijds de Beperkte Garantie van HP of anderzijds het aanspreken van de verkoper in toepassing van de wettelijke garantie.

Finland

HP:n rajoitettu takuu on HP:n vapaaehtoisesti antama kaupallinen takuu. HP:n myöntämästä takuusta maassanne vastaavan HP:n edustajan yhteystiedot ovat:

Suomi: HP Finland Oy, Piispankalliontie, FIN - 02200 Espoo

HP:n takuun edut ovat voimassa mahdollisten kuluttajansuojalakiin perustuvien oikeuksien lisäksi sen varalta, että tuote ei vastaa myyntisopimusta. Saat lisätietoja seuraavasta linkistä: Kuluttajansuoja (https://www.hp.com/go/eu-legal) tai voit käydä Euroopan kuluttajakeskuksen sivustolla (ec.europa.eu/info/live-work-travel-eu/consumers/resolve-your-consumer-complaint/european-consumer-centres-network-ecc-net_en). Kuluttajilla on oikeus vaatia virheen korjausta HP:n takuun ja kuluttajansuojan perusteella HP:lta tai myyjältä.

Slovenia

Omejena garancija HP je prostovoljna trgovska garancija, ki jo zagotavlja podjetje HP. Ime in naslov poslovne enote HP, ki je odgovorna za omejeno garancijo HP v vaši državi, sta naslednja:

Slovenija: Hewlett-Packard Europe B.V., Amsterdam, Meyrin Branch, Route du Nant-d'Avril 150, 1217 Meyrin, Switzerland

Ugodnosti omejene garancije HP veljajo poleg zakonskih pravic, ki ob sklenitvi kupoprodajne pogodbe izhajajo iz dveletne garancije prodajalca v primeru neskladnosti blaga, vendar lahko na izpolnjevanje pogojev za uveljavitev pravic vplivajo različni dejavniki. Omejena garancija HP nikakor ne omejuje strankinih z zakonom predpisanih pravic in ne vpliva nanje. Za dodatne informacije glejte naslednjo povezavo: Strankino pravno jamstvo (https://www.hp.com/go/eu-legal); ali pa obiščite spletno mesto evropskih središč za potrošnike (ec.europa.eu/info/live-work-travel-eu/consumers/resolve-your-consumer-complaint/european-consumer-centres-network-ecc-net_en). Potrošniki imajo pravico izbrati, ali bodo uveljavljali pravice do storitev v skladu z omejeno garancijo HP ali proti prodajalcu v skladu z dvoletno zakonsko garancijo.

Croatia

HP ograničeno jamstvo komercijalno je dobrovoljno jamstvo koje pruža HP. Ime i adresa HP subjekta odgovornog za HP ograničeno jamstvo u vašoj državi:

Hrvatska: HP Computing and Printing d.o.o. za računalne i srodne aktivnosti, Radnička cesta 41, 10000 Zagreb

Pogodnosti HP ograničenog jamstva vrijede zajedno uz sva zakonska prava na dvogodišnje jamstvo kod bilo kojeg prodavača s obzirom na nepodudaranje robe s ugovorom o kupnji. Međutim, razni faktori mogu utjecati na vašu mogućnost ostvarivanja tih prava. HP ograničeno jamstvo ni na koji način ne utječe niti ne ograničava zakonska prava potrošača. Dodatne informacije potražite

na ovoj adresi: Zakonsko jamstvo za potrošače (https://www.hp.com/go/eu-legal) ili možete posjetiti web-mjesto Europskih potrošačkih centara (ec.europa.eu/info/live-work-travel-eu/consumers/resolve-your-consumer-complaint/european-consumer-centres-network-ecc-net_en). Potrošači imaju pravo odabrati žele li ostvariti svoja potraživanja u sklopu HP ograničenog jamstva ili pravnog jamstva prodavača u trajanju ispod dvije godine.

Latvia

HP ierobežotā garantija ir komercgarantija, kuru brīvprātīgi nodrošina HP. HP uzņēmums, kas sniedz HP ierobežotās garantijas servisa nodrošinājumu jūsu valstī:

Latvija: HP Finland Oy, PO Box 515, 02201 Espoo, Finland

HP ierobežotās garantijas priekšrocības tiek piedāvātas papildus jebkurām likumīgajām tiesībām uz pārdevēja un/vai ražotāju nodrošinātu divu gadu garantiju gadījumā, ja preces neatbilst pirkuma līgumam, tomēr šo tiesību saņemšanu var ietekmēt vairāki faktori. HP ierobežotā garantija nekādā veidā neierobežo un neietekmē patērētāju likumīgās tiesības. Lai iegūtu plašāku informāciju, izmantojiet šo saiti: Patērētāju likumīgā garantija (https://www.hp.com/go/eu-legal) vai arī Eiropas Patērētāju tiesību aizsardzības centra tīmekļa vietni (ec.europa.eu/info/live-work-travel-eu/consumers/resolve-your-consumer-complaint/european-consumer-centres-network-ecc-net_en). Patērētājiem ir tiesības izvēlēties, vai pieprasīt servisa nodrošinājumu saskaņā ar HP ierobežoto garantiju, vai arī pārdevēja sniegto divu gadu garantiju.

Lithuania

HP ribotoji garantija yra HP savanoriškai teikiama komercinė garantija. Toliau pateikiami HP bendrovių, teikiančių HP garantiją (gamintojo garantiją) jūsų šalyje, pavadinimai ir adresai:

Lietuva: HP Finland Oy, PO Box 515, 02201 Espoo, Finland

HP ribotoji garantija papildomai taikoma kartu su bet kokiomis kitomis įstatymais nustatytomis teisėmis į pardavėjo suteikiamą dviejų metų laikotarpio garantiją dėl prekių atitikties pardavimo sutarčiai, tačiau tai, ar jums ši teisė bus suteikiama, gali priklausyti nuo įvairių aplinkybių. HP ribotoji garantija niekaip neapriboja ir neįtakoja įstatymais nustatytų vartotojo teisių. Daugiau informacijos rasite paspaudę šią nuorodą: Teisinė vartotojo garantija (www.hp.com/go/eu-legal) arba apsilankę Europos vartotojų centro internetinėje svetainėje (ec.europa.eu/info/live-work-travel-eu/consumers/resolve-your-consumer-complaint/european-consumer-centres-network-ecc-net_en). Vartotojai turi teisę prašyti atlikti techninį aptarnavimą pagal HP ribotąją garantiją arba pardavėjo teikiamą dviejų metų įstatymais nustatytą garantiją.

Estonia

HP piiratud garantii on HP poolt vabatahtlikult pakutav kaubanduslik garantii. HP piiratud garantii eest vastutab HP üksus aadressil:

Eesti: HP Finland Oy, PO Box 515, 02201 Espoo, Finland

HP piiratud garantii rakendub lisaks seaduses ettenähtud müüjapoolsele kaheaastasele garantiile, juhul kui toode ei vasta müügilepingu tingimustele. Siiski võib esineda asjaolusid, mille puhul teie jaoks need õigused ei pruugi kehtida. HP piiratud garantii ei piira ega mõjuta mingil moel tarbija seadusjärgseid õigusi. Lisateavet leiate järgmiselt lingilt: tarbija õiguslik garantii (https://www.hp.com/go/eu-legal) või võite külastada Euroopa tarbijakeskuste veebisaiti (ec.europa.eu/info/live-work-travel-eu/consumers/resolve-your-consumer-complaint/european-consumer-centres-network-ecc-net_en). Tarbijal on õigus valida, kas ta soovib kasutada HP piiratud garantiid või seadusega ette nähtud müüjapoolset kaheaastast garantiid.

Russia

Срок службы принтера для России

Срок службы данного принтера HP составляет пять лет в нормальных условиях эксплуатации. Срок службы отсчитывается с момента ввода принтера в эксплуатацию. В конце срока службы HP рекомендует посетить веб-сайт нашей службы поддержки по адресу www.hp.com/support и/или связаться с авторизованным поставщиком услуг HP для получения рекомендаций в отношении дальнейшего безопасного использования принтера.

Georgia

HP-ის შეზღუდული გარანტია

ერთწლიანი შეზღუდული გარანტია აპარატურულ უზრუნველყოფაზე. გარანტიის და მხარდაჭერის ვარიანტების ხელმისაწვდომობა დამოკიდებულია პროდუქტზე, ქვეყანასა და ადგილობრივ სამართლებრივ მოთხოვნებზე. წესების და პირობების სრული ტექსტი იხილეთ ვებგვერდზე hp.com/go/orderdocuments.

კომპანია HP-ის შეტყობინებები

აქ წარმოდგენილი ინფორმაცია შეიძლება შეიცვალოს შეტყობინების გარეშე. ზოგიერთი განაცხადი შეიძლება არ ეხებოდეს თქვენს პრინტერს ან ყველა ქვეყანას/რეგიონს.

ინფორმაცია Windows®-ის მომხმარებლებისთვის: თქვენ ასევე შეგიძლიათ შეუკვეთოთ პრინტერის პროგრამული უზრუნველყოფის CD ვებსაიტზე www.support.hp.com პრინტერის რეგისტრაცია: register.hp.com

პრინტერის პრობლემების აღმოფხვრისთვის გამოიყენეთ HP-ის სადიაგნოსტიკო ინსტრუმენტები: www.hp.com/go/tools

დამატებითი დახმარების მისაღებად და შეტყობინებების მოსაძებნად, ასევე გარემოს დაცვასთან და რეგულაციებთან დაკავშირებული ინფორმაციის, მათ შორის ევროკავშირის რეგულაციებთან შესაბამისობის ინფორმაციის, ჩრდილოეთ ამერიკის ელექტრომაგნიტური თავსებადობის ეგულაციების, უსადენო და სატელეკომუნიკაციო კავშირის რეგულაციების და სხვა შესაბამისობის დოკუმენტების სანახავად, გაეცანით მომხმარებლის ონლაინ სახელმძღვანელოს: http://www.support.hp.com

შესაბამისობის დეკლარაცია: www.hp.eu/certificates ინფორმაცია პრინტერში გამოყენებული, ღია კოდზე დაფუძნებული პროგრამული უზრუნველყოფის შესახებ: www.hp.com/software/opensource

მელნის გამოყენება: www.hp.com/go/inkusage

გამოიყენეთ მხოლოდ HP-ის მიერ მოწოდებული დენის კაბელი და ადაპტერი (თუ შედის კომპლექტში).

მოდელის რეგულაციის ნომერი

შესაბამისი რეგულაციის იდენტიფიკაციის მიზნით, თქვენს პროდუქტს მინიჭებული აქვს მოდელის რეგულაციის ნომერი. აღნიშნული მოდელის რეგულაციის ნომერი არ უნდა აგერიოთ მარკეტინგულ დასახელებაში ან პროდუქტის ნომერში.

ქიმიური ნივთიერებები

HP ვალდებულებას იღებს საკუთარ მომხმარებლებს მიაწოდოს ინფორმაცია მის პროდუქტებში შემავალი ქიმიური ნივთიერებების შესახებ, რაც საჭიროა სამართლებრივი მოთხოვნების, მაგალითად REACH-ის *(ევროპარლამენტის და ევროსაბჭოს რეგულაცია EC No 1907/2006)* პირობების შესრულებისთვის. ამ პროდუქტში შემავალი ქიმიური ნივთიერებების შესახებ ინფორმაციის ანგარიში მოცემულია აქ: www.hp.com/go/reach

ექსპლუატაციიდან ამოღებული აღჭურვილობის უტილიზაცია მომხმარებლების მიერ



ეს სიმბოლო აღნიშნავს, რომ არ შეიძლება ამ პროდუქტის უტილიზაცია საყოფაცხოვრებო ნარჩენებთან ერთად. თქვენ ვალდებული ხართ გაუფრთხილდეთ ადამიანის ჯანმრთელობას და გარემოს, ამიტომ აღჭურვილობის ნარჩენები უნდა მიიტანოთ ელექტრო და ელექტრონული აღჭურვილობის ნარჩენების გადამუშავების სპეციალურ პუნქტში. დამატებითი ინფორმაციისთვის დაუკავშირდით საყოფაცხოვრებო ნარჩენების უტილიზაციის ადგილობრივ ცენტრს ან გადადით ვებგვერდზე www.hp.com/recycle

Reminder on the use of non-HP supplies

The printer will not work as expected when non-HP supplies or HP supplies that have been refilled, refurbished, re-manufactured, or tampered with in any way are detected.

HP anti-counterfeit website

Go to www.hp.com/go/anticounterfeit when you install an HP toner cartridge and the control-panel message indicates the cartridge is a non-HP supply. HP will help determine if the cartridge is an original and take steps to resolve the problem.

Your toner cartridge might not be an Original HP toner cartridge if you notice the following:

- The supplies status page indicates that a non-HP supply is installed.
- You are experiencing a high number of problems with the cartridge.
- The cartridge does not look like it usually does (for example, the packaging differs from HP packaging).

Data stored on the toner cartridge

The HP toner cartridges used with this product contain a memory chip that assists in the operation of the product.

In addition, this memory chip collects a limited set of information about the usage of the product, which might include the following: the date when the toner cartridge was first installed, the date when the toner cartridge was last used, the number of pages printed using the toner cartridge, the page coverage, the printing modes used, any printing errors that might have occurred, and the product model. This information helps HP design future products to meet our customers' printing needs.

The data collected from the toner cartridge memory chip does not contain information that can be used to identify a customer or user of the toner cartridge or their product.

HP collects a sampling of the memory chips from toner cartridges returned to HP's free return and recycling program (HP Planet Partners: www.hp.com/recycle). The memory chips from this sampling are read and studied in order to improve future HP products. HP partners who assist in recycling this toner cartridge might have access to this data, as well.

Any third party possessing the toner cartridge might have access to the anonymous information on the memory chip.

End User License Agreement

READ CAREFULLY BEFORE USING THIS SOFTWARE EQUIPMENT:

This End-User License Agreement ("EULA") is a legal agreement between (a) you (either an individual or a single entity) and (b) HP Inc. ("HP") that governs your use of any Software Product, installed on or made available by HP for use with your HP product ("HP Product"), that is not otherwise subject to a separate license agreement between you and HP or its suppliers. Other software may contain a EULA in its online documentation. The term "Software Product" means computer software and may include associated media, printed materials and "online" or electronic documentation.

An amendment or addendum to this EULA may accompany the HP Product.

RIGHTS IN THE SOFTWARE PRODUCT ARE OFFERED ONLY ON THE CONDITION THAT YOU AGREE TO ALL TERMS AND CONDITIONS OF THIS EULA. BY INSTALLING, COPYING, DOWNLOADING, OR OTHERWISE USING THE SOFTWARE PRODUCT, YOU AGREE TO BE BOUND BY THE TERMS OF THIS EULA. IF YOU DO NOT ACCEPT THESE LICENSE TERMS, YOUR SOLE REMEDY IS TO RETURN THE ENTIRE UNUSED PRODUCT (HARDWARE AND SOFTWARE) WITHIN 14 DAYS FOR A REFUND SUBJECT TO THE REFUND POLICY OF YOUR PLACE OF PURCHASE.

THIS EULA IS A GLOBAL AGREEMENT AND IS NOT SPECIFIC TO ANY PARTICULAR COUNTRY/REGION, STATE OR TERRITORY. IF YOU ACQUIRED THE SOFTWARE AS A CONSUMER WITHIN THE MEANING OF RELEVANT CONSUMER LEGISLATION IN YOUR COUNTRY/REGION, STATE OR TERRITORY, THEN DESPITE ANYTHING TO THE CONTRARY IN THIS EULA, NOTHING IN THIS EULA AFFECTS ANY NON EXCLUDABLE STATUTORY RIGHTS OR REMEDIES THAT YOU MAY HAVE UNDER SUCH CONSUMER LEGISLATION AND THIS EULA IS SUBJECT TO THOSE RIGHTS AND REMEDIES. REFER TO SECTION 16 FOR FURTHER INFORMATION ON YOUR CONSUMER RIGHTS.

1. GRANT OF LICENSE. HP grants you the following rights provided you comply with all terms and conditions of this EULA:

    a. Use. You may use the Software Product on a single computer ("Your Computer"). If the Software Product is provided to you via the internet and was originally licensed for use on more than one computer, you may install and use the Software Product only on those computers. You may not separate component parts of the Software Product for use on more than one computer. You do not have the right to distribute the Software Product, nor do you have the right to modify the Software Product or disable any licensing or control feature of the Software Product. You may load the Software Product into Your Computer's temporary memory (RAM) for purposes of using the Software Product.

    b. Storage. You may copy the Software Product into the local memory or storage device of the HP Product.

    c. Copying. You may make archival or back-up copies of the Software Product, provided the copy contains all of the original Software Product's proprietary notices and that it is used only for back-up purposes.

    d. Reservation of Rights. HP and its suppliers reserve all rights not expressly granted to you in this EULA.

    e. Freeware. Notwithstanding the terms and conditions of this EULA, all or any portion of the Software Product which constitutes non-proprietary HP software or software provided under public license by third parties ("Freeware"), is licensed to you subject to the terms and conditions of the software license agreement accompanying such Freeware whether in the form of a discrete agreement, shrink wrap license or electronic license terms accepted at time of download. Use of the Freeware by you shall be governed entirely by the terms and conditions of such license.

f. Recovery Solution. Any software recovery solution provided with/for your HP Product, whether in the form of a hard disk drive-based solution, an external media-based recovery solution (e.g. floppy disk, CD or DVD) or an equivalent solution delivered in any other form, may only be used for restoring the hard disk of the HP Product with/for which the recovery solution was originally purchased. The use of any Microsoft operating system software contained in such recovery solution shall be governed by the Microsoft License Agreement.

2. UPGRADES. To use a Software Product identified as an upgrade, you must first be licensed for the original Software Product identified by HP as eligible for the upgrade. After upgrading, you may no longer use the original Software Product that formed the basis for your upgrade eligibility. By using the Software Product, you also agree that HP may automatically access your HP Product when connected to the internet to check the version or status of certain Software Products and may automatically download and install upgrades or updates to such Software Products on to your HP Product to provide new versions or updates required to maintain the functionality, performance, or security of the Software Product and your HP Product and facilitate the provision of support or other services provided to you. In certain cases, and depending on the type of upgrade or update, notifications will be provided to you (via pop-up or other means), which may require you to initiate the upgrade or update.

3. ADDITIONAL SOFTWARE. This EULA applies to updates or supplements to the original Software Product provided by HP unless HP provides other terms along with the update or supplement. In case of a conflict between such terms, the other terms will prevail.

4. TRANSFER.

   a. Third Party. The initial user of the Software Product may make a one-time transfer of the Software Product to another end user. Any transfer must include all component parts, media, printed materials, this EULA, and if applicable, the Certificate of Authenticity. The transfer may not be an indirect transfer, such as a consignment. Prior to the transfer, the end user receiving the transferred product must agree to all the EULA terms. Upon transfer of the Software Product, your license is automatically terminated.

   b. Restrictions. You may not rent, lease or lend the Software Product or use the Software Product for commercial timesharing or bureau use. You may not sublicense, assign or transfer the license or Software Product except as expressly provided in this EULA.

5. PROPRIETARY RIGHTS. All intellectual property rights in the Software Product and user documentation are owned by HP or its suppliers and are protected by law, including but not limited to United States copyright, trade secret, and trademark law, as well as other applicable laws and international treaty provisions. You shall not remove any product identification, copyright notices or proprietary restrictions from the Software Product.

6. LIMITATION ON REVERSE ENGINEERING. You may not reverse engineer, decompile, or disassemble the Software Product, except and only to the extent that the right to do so is mandated under applicable law notwithstanding this limitation or it is expressly provided for in this EULA.

7. TERM. This EULA is effective unless terminated or rejected. This EULA will also terminate upon conditions set forth elsewhere in this EULA or if you fail to comply with any term or condition of this EULA.

8. NOTICE OF DATA COLLECTION.

   CONSENT TO COLLECTION/USE OF DATA.

   a. You agree that HP and its affiliates may collect, combine, and use device and individual user information you provide in relation to support services related to the Software Product. HP agrees not to use this information to market to you without your consent. Learn More about HP data collection practices at www.hp.com/go/privacy

b. HP will use cookies and other web technology tools to collect anonymous technical information related to HP Software and your HP Product. This data will be used to provide the upgrades and related support or other services described in Section 2. HP will also collect personal information including your Internet Protocol address or other unique identifier information associated with your HP Product and data provided by you on registration of your HP Product. As well as providing the upgrades and related support or other services, this data will be used for sending marketing communications to you (in each case with your express consent where required by applicable law).

   To the extent permitted by applicable law, by accepting these terms and conditions you consent to the collection and use of anonymous and personal data by HP, its subsidiaries, and affiliates as described in this EULA and as further described in HP's privacy policy: www.hp.com/go/privacy

c. Collection/Use by Third Parties. Certain software programs included in your HP Product are provided and separately licensed to you by third party providers ("Third Party Software"). Third Party Software may be installed and operational on your HP Product even if you choose not to activate/purchase such software. Third Party Software may collect and transmit technical information about your system (i.e., IP address, unique device identifier, software version installed, etc.) and other system data. This information is used by the third party to identify technical system attributes and ensure that the most current version of the software has been installed on your system. If you do not want the Third Party Software to collect this technical information or automatically send you version updates, you should uninstall the software prior to connecting to the Internet.

9. DISCLAIMER OF WARRANTIES. TO THE MAXIMUM EXTENT PERMITTED BY APPLICABLE LAW, HP AND ITS SUPPLIERS PROVIDE THE SOFTWARE PRODUCT "AS IS" AND WITH ALL FAULTS, AND HEREBY DISCLAIM ALL OTHER WARRANTIES, DUTIES, AND CONDITIONS, EITHER EXPRESS, IMPLIED, OR STATUTORY, INCLUDING, BUT NOT LIMITED TO, WARRANTIES: (i) OF TITLE AND NON-INFRINGEMENT; (ii) OF MERCHANTABILITY; (iii) OF FITNESS FOR A PARTICULAR PURPOSE; (iv) THAT THE SOFTWARE PRODUCT WILL FUNCTION WITH NON-HP SUPPLIES OR ACCESSORIES; AND (v), OF LACK OF VIRUSES ALL WITH REGARD TO THE SOFTWARE PRODUCT. Some states/jurisdictions do not allow exclusion of implied warranties or limitations on the duration of implied warranties, so the above disclaimer may not apply to you in its entirety.

10. LIMITATION OF LIABILITY. Subject to the laws of the People's Republic of China, notwithstanding any damages that you might incur, the entire liability of HP and any of its suppliers under any provision of this EULA and your exclusive remedy for all of the foregoing shall be limited to the greater of the amount actually paid by you separately for the Software Product or U.S. $5.00. TO THE MAXIMUM EXTENT PERMITTED BY APPLICABLE LAW, IN NO EVENT SHALL HP OR ITS SUPPLIERS BE LIABLE FOR ANY SPECIAL, INCIDENTAL, INDIRECT, OR CONSEQUENTIAL DAMAGES WHATSOEVER (INCLUDING, BUT NOT LIMITED TO, DAMAGES FOR LOSS OF PROFITS OR CONFIDENTIAL OR OTHER INFORMATION, FOR BUSINESS INTERRUPTION, FOR PERSONAL INJURY, OR FOR LOSS OF PRIVACY) ARISING OUT OF OR IN ANY WAY RELATED TO THE USE OF OR INABILITY TO USE THE SOFTWARE PRODUCT, OR OTHERWISE IN CONNECTION WITH ANY PROVISION OF THIS EULA, EVEN IF HP OR ANY SUPPLIER HAS BEEN ADVISED OF THE POSSIBILITY OF SUCH DAMAGES AND EVEN IF THE REMEDY FAILS OF ITS ESSENTIAL PURPOSE. Some states/jurisdictions do not allow the exclusion or limitation of incidental or consequential damages, so the above limitation or exclusion may not apply to you.

11. U.S. GOVERNMENT CUSTOMERS. Consistent with FAR 12.211 and 12.212, Commercial Computer Software, Computer Software Documentation, and Technical Data for Commercial Items are licensed to the U.S. Government under HP's standard commercial license.

12. COMPLIANCE WITH EXPORT LAWS. You shall comply with all laws and regulations of the United States and other countries/regions ("Export Laws") to assure that the Software Product is not (1) exported, directly or indirectly, in violation of Export Laws, or (2) used for any purpose prohibited by Export Laws, including, without limitation, nuclear, chemical, or biological weapons proliferation.

13. CAPACITY AND AUTHORITY TO CONTRACT. You represent that you are of the legal age of majority in your state of residence and, if applicable, you are duly authorized by your employer to enter into this contract.

14. APPLICABLE LAW. This EULA is governed by the laws of the country/region in which the equipment was purchased.

15. ENTIRE AGREEMENT. This EULA (including any addendum or amendment to this EULA which is included with the HP Product) is the entire agreement between you and HP relating to the Software Product and it supersedes all prior or contemporaneous oral or written communications, proposals and representations with respect to the Software Product or any other subject matter covered by this EULA. To the extent the terms of any HP policies or programs for support services conflict with the terms of this EULA, the terms of this EULA shall control.

16. CONSUMER RIGHTS. Consumers in some countries/regions, states or territories may have the benefit of certain statutory rights and remedies under consumer legislation in respect of which HP's liability cannot lawfully be excluded or limited. If you acquired the Software as a consumer within the meaning of relevant consumer legislation in your country/region, state or territory, the provisions of this EULA (including the disclaimers of warranties, limitations and exclusions of liability) must be read subject to applicable law and apply only to the maximum extent permitted by that applicable law.

    Australian Consumers: If you acquired the Software as a consumer within the meaning of the 'Australian Consumer Law' under the Australian Competition and Consumer Act 2010 (Cth) then despite any other provision of this EULA:

    a. the Software comes with guarantees that cannot be excluded under the Australian Consumer Law, including that goods will be of acceptable quality and services will be supplied with due care and skill. You are entitled to a replacement or refund for a major failure and compensation for any other reasonably foreseeable loss or damage. You are also entitled to have the Software repaired or replaced if it is not of acceptable quality and the failure does not amount to a major failure.

    b. nothing in this EULA excludes, restricts or modifies any right or remedy, or any guarantee, warranty or other term or condition implied or imposed by the Australian Consumer Law which cannot be lawfully excluded or limited; and

    c. the benefits provided to you by the express warranties in this EULA are in addition to other rights and remedies available to you under the Australian Consumer Law. Your rights under the Australian Consumer Law prevail to the extent that they are inconsistent with any limitations contained in the express warranty.

    d. The Software may be capable of retaining user-generated data. HP hereby provides you with notice that if HP repairs your Software, that repair may result in the loss of that data. To the full extent permitted by law, the limitations and exclusions of HP's liability in this EULA apply in respect of any such loss of data.

    If you think that you are entitled to any warranty under this agreement or any of the above remedies, please contact HP:

HP PPS Australia Pty Ltd

Rhodes Corporate Park, Building F, Level 5

1 Homebush Bay Drive

Rhodes, NSW 2138

Australia

To initiate a support request or warranty claim, please call 13 10 47 (within Australia) or +61 2 8278 1039 (if dialing internationally) or visit www8.hp.com/au/en/contact-hp/phone-assist.html for the most current list of phone support numbers.

If you are a consumer within the meaning of the Australia Consumer Law and you are purchasing the Software or warranty and support services for the Software which are not of a kind ordinarily acquired for personal, domestic or household use or consumption, then despite any other provision of this EULA, HP limits its liability for failure to comply with a consumer guarantee as follows:

a. provision of warranty or support services for the Software: to any one or more of the following: re-supply of the services or payment of the costs of having the services re-supplied;

b. provision of the Software: to any one or more of the following: replacement of the Software or the supply of equivalent software; repair of the Software; payment of the costs of replacing the Software or of acquiring equivalent software; or payment of the costs of having the Software repaired; and

c. otherwise, to the maximum extent permitted by law.

New Zealand Consumers: In New Zealand, the Software comes with guarantees that cannot be excluded under the Consumer Guarantees Act 1993. In New Zealand, Consumer Transaction means a transaction involving a person who is purchasing goods for personal, domestic or household use or consumption and not for the purpose of a business. New Zealand consumers who are purchasing goods for personal, domestic or household use or consumption and not for the purpose of a business ("New Zealand Consumers") are entitled to repair, replacement or refund for a failure and compensation for other reasonably foreseeable loss or damage. A New Zealand Consumer (as defined above) may recover the costs of returning the product to the place of purchase if there is a breach of the New Zealand consumer law; furthermore, if it will be of significant cost to the New Zealand Consumer to return the goods to HP then HP will collect such goods at its own cost. Where any supply of products or services is for business purposes, you agree that the Consumer Guarantees Act 1993 does not apply and that given the nature and value of the transaction, this is fair and reasonable.

The information contained herein is subject to change without notice. All other product names mentioned herein may be trademarks of their respective companies. To the extent permitted by applicable law, the only warranties for HP products and services are set forth in the express warranty statements accompanying such products and services. Nothing herein should be construed as constituting an additional warranty. To the extent permitted by applicable law, HP shall not be liable for technical or editorial errors or omissions contained herein.

Customer self-repair warranty service

HP products are designed with many Customer Self Repair (CSR) parts to minimize repair time and allow for greater flexibility in performing defective parts replacement. If during the diagnosis period, HP identifies that the repair can be accomplished by the use of a CSR part, HP will ship that part directly to you for replacement. There are two categories of CSR parts: 1) Parts for which customer self repair is mandatory. If you request HP to replace these parts, you will be charged for the travel and labor costs of this service. 2) Parts for which customer self repair is optional. These parts are also designed for Customer Self Repair. If, however, you require that HP replace them for you, this may be done at no additional charge under the type of warranty service designated for your product.

Based on availability and where geography permits, CSR parts will be shipped for next business day delivery. Same-day or four-hour delivery may be offered at an additional charge where geography permits. If assistance is required, you can call the HP Technical Support Center and a technician will help you over the phone. HP specifies in the materials shipped with a replacement CSR part whether a defective part must be returned to HP. In cases where it is required to return the defective part to HP, you must ship the defective part back to HP within a defined period of time, normally five (5) business days. The defective part must be returned with the associated documentation in the provided shipping material. Failure to return the defective part may result in HP billing you for the replacement. With a customer self repair, HP will pay all shipping and part return costs and determine the courier/carrier to be used.

Customer support

Customer Support

Support	Website
Get telephone support for your location Have the product name, serial number, date of purchase, and problem description ready.	Location phone numbers are on the flyer that was in the box with your product or at http://www.hp.com/support
Get 24-hour Internet support, and download software utilities and drivers	http://www.hp.com/support
Order additional HP service or maintenance agreements	www.hp.com/go/carepack
Register your product	www.register.hp.com

C Environmental product stewardship program

This section describes the environmental-friendly product stewardship program at HP.

Protecting the environment

HP is committed to providing quality products in an environmentally sound manner. This product has been designed with several attributes to minimize impacts on our environment.

Ozone production

The airborne emissions of ozone for this product have been measured according to a standardized protocol and when these emissions data are applied to an anticipated high-use scenario in an office workspace, HP has determined there is no appreciable amount of ozone generated during printing and the levels are well within current indoor air quality standards and guidelines.

References:

Test method for the determination of emissions from hardcopy devices with respect to awarding the environmental label for office devices with printing function; DE-UZ 205 – BAM; January 2018.

Based on ozone concentration when printing 2 hours per day in 30.6 cubic meter room with a ventilation rate of 0.68 air changes per hour with HP printing supplies.

Power consumption

Power usage drops significantly while in Ready, Sleep, or Off mode, which saves natural resources and saves money without affecting the high performance of this product. HP printing and imaging equipment marked with the ENERGY STAR® logo is qualified to the U.S. Environmental Protection Agency's ENERGY STAR specifications for imaging equipment. The following mark will appear on ENERGY STAR qualified imaging products:



Additional ENERGY STAR qualified imaging product model information is listed at:

www.hp.com/go/energystar

Toner consumption

EconoMode uses less toner, which might extend the life of the print cartridge. HP does not recommend the full-time use of EconoMode. If EconoMode is used full-time, the toner supply might outlast the mechanical parts in the print cartridge. If print quality begins to degrade and is no longer acceptable, consider replacing the print cartridge.

Paper use

This product's duplex feature (manual or automatic) and N-up printing (multiple pages printed on one page) capability can reduce paper usage and the resulting demands on natural resources.

Plastics

Plastic parts over 25 grams are marked according to international standards that enhance the ability to identify plastics for recycling purposes at the end of the product's life.

HP LaserJet print supplies

Original HP supplies were designed with the environment in mind. HP makes it easy to conserve resources and paper when printing. And when you are done, we make it easy and free to recycle.[1]

All HP cartridges returned to HP Planet Partners go through a multiphase recycling process where materials are separated and refined for use as raw material in new Original HP cartridges and everyday products. No Original HP cartridges returned through HP Planet Partners are ever sent to a landfill, and HP never refills or resells Original HP cartridges.

To participate in HP Planet Partners return and recycling program, visit www.hp.com/recycle. Select your location for information on how to return HP printing supplies. Multi-lingual program information and instructions are also included in every new HP LaserJet print cartridge package.

[1] Program availability varies. For more information, visit www.hp.com/recycle

Paper

This product is capable of using recycled paper and lightweight paper (EcoFFICIENT™) when the paper meets the guidelines outlined in the *HP Laser Printer Family Print Media Guide*. This product is suitable for the use of recycled paper and lightweight paper (EcoFFICIENT™) according to EN12281:2002.

Material restrictions

This HP product does not contain added mercury.

Disposal of waste equipment by users (EU and India)



This symbol means do not dispose of your product with your other household waste. Instead, you should protect human health and the environment by handing over your waste equipment to a designated collection point for the recycling of waste electrical and electronic equipment. For more information, please contact your household waste disposal service, or go to: www.hp.com/recycle

Electronic hardware recycling

HP encourages customers to recycle used electronic hardware. For more information about recycling programs go to: www.hp.com/recycle

Hardware recycling information (Brazil)



Não descarte o produto eletrônico em lixo comum

Este produto eletrônico e seus componentes não devem ser descartados no lixo comum, pois embora estejam em conformidade com padrões mundiais de restrição a substâncias nocivas, podem conter, ainda que em quantidades mínimas, substâncias impactantes ao meio ambiente. Ao final da vida útil deste produto, o usuário deverá entregá-lo à HP. A não observância dessa orientação sujeitará o infrator às sanções previstas em lei.

Após o uso, as pilhas e/ou baterias dos produtos HP deverão ser entregues ao estabelecimento comercial ou rede de assistência técnica autorizada pela HP.

Para maiores informações, inclusive sobre os pontos de recebimento, acesse:

https://www.hp.com/br-pt/sustainable-impact/planet-product-recycling.html

Chemical substances



HP is committed to providing our customers with information about the chemical substances in our products as needed to comply with legal requirements such as REACH (Regulation EC No 1907/2006 of the European Parliament and the Council). A chemical information report for this product can be found at: www.hp.com/go/reach

Product Power Data per European Union Commission Regulation 2023/826

For product power data, including the power consumption of the product in networked standby if all wired network ports are connected and all wireless network ports are activated, please refer to section P14 'Additional Information' of the product IT ECO Declaration at https://www.hp.com/us-en/sustainable-impact/document-reports.html

SEPA Ecolabel User Information (China)

中国环境标识认证产品用户说明

噪声大于 63.0 dB(A)的办公设备不宜放置于办公室内，请在独立的隔离区域使用。

如需长时间使用本产品或打印大量文件，请确保在通风良好的房间内使用。

如您需要确认本产品处于零能耗状态，请按下电源关闭按钮，并将插头从电源插座断开。

您可以使用再生纸，以减少资源耗费。

The regulation of the implementation on China energy label for printer and copier

依据“复印机、打印机和传真机能源效率标识实施规则”，本打印机具有中国能效标签。根据“复印机、打印机和传真机能效限定值及能效等级”（“GB21521”）决定并计算得出该标签上所示的能效等级和 TEC（典型能耗）值。

1. 能效等级

能效等级分为三个等级，等级 1 级能效最高。根据产品类型和打印速度标准决定能效限定值。

2. 能效信息

2.1 激光打印机及一体机和高性能喷墨打印机及一体机

- 典型能耗

  典型能耗是正常运行 GB21521 测试方法中指定的时间后的耗电量。此数据表示为每周千瓦时 (kWh) 。

标签上所示的能效数字按涵盖根据“复印机、打印机和传真机能源效率标识实施规则”选择的登记装置中所有配置的代表性配置测定而得。因此，本特定产品型号的实际能耗可能与标签上所示的数据不同。

有关规范的详情信息，请参阅 GB21521 标准的当前版本。

Restriction of Hazardous Substances statement (India)

This product, as well as its related consumables and spares, complies with the reduction in hazardous substances provisions of the "India E-waste Rule 2016." It does not contain lead, mercury, hexavalent chromium, polybrominated biphenyls or polybrominated diphenyl ethers in concentrations exceeding 0.1 weight % and 0.01 weight % for cadmium, except where allowed pursuant to the exemptions set in Schedule 2 of the Rule.

WEEE (Turkey)

Türkiye Cumhuriyeti: AEEE Yönetmeliğine Uygundurp

The Table of Hazardous Substances/Elements and their Content (China)

电器电子产品中有害物质的名称及含有信息表

The Table of names and content information of hazardous substances in electrical and electronic products

根据中国《电器电子产品有害物质限制使用管理办法》

As required by China's Management Methods for Restricted Use of Hazardous Substances in Electrical and Electronic Products

产品中有害物质的名称及含有的信息表

Table of names and content information of hazardous substances in the products

部件名称 Part name	有害物质 Hazardous substances									
	铅 (Pb)	汞 (Hg)	镉 (Cd)	六价铬 (Cr(VI))	多溴联苯 (PBBs)	多溴二苯醚 (PBDEs)	邻苯二甲酸二正丁酯 (DBP)	邻苯二甲酸二异丁酯 (DIBP)	邻苯二甲酸丁苄酯 (BBP)	邻苯二甲酸二（2-乙基）己酯 (DEHP)
打印引擎	×	○	○	○	○	○	○	○	○	○
复印机组件	×	○	○	○	○	○	○	○	○	○
控制面板	×	○	○	○	○	○	○	○	○	○
塑料外壳	○	○	○	○	○	○	○	○	○	○
格式化板组件	×	○	○	○	○	○	○	○	○	○
碳粉盒	×	○	○	○	○	○	○	○	○	○

注 1：○：表示该有害物质在该部件所有均质材料中的含量均不超出电器电子产品有害物质限制使用国家标准要求。

Note 1: ○ : denotes that the content of said hazardous substance in all of the homogeneous materials in the said part does not exceed the limits given in the national standard regarding restricted use of hazardous substances in electrical and electronic products.

×：表示该有害物质至少在该部件的某一均质材料中的含量超出电器电子产品有害物质限制使用国家标准要求。

× : denotes that the content of said hazardous substance in at least one of the homogeneous materials in the said part exceeds the limits given in the national standard regarding restricted use of hazardous substances in electrical and electronic products.

注 2：以上未列出的部件,表明其有害物质含量均不超出电器电子产品有害物质限制使用国家标准要求。

Note 2: Parts not listed above indicate that the content of hazardous substances contained therein does not exceed the limits given in the national standard regarding restricted use of hazardous substances in electrical and electronic products.

Material Safety Data Sheet (MSDS)

Material Safety Data Sheets (MSDS) for supplies containing chemical substances (for example, toner) can be obtained by accessing the HP Web site at www.hp.com/go/msds

EPEAT

Many HP products are designed to meet EPEAT. EPEAT is a comprehensive environmental rating that helps identify greener electronics equipment. For more information on EPEAT go to www.epeat.net. For information on HP's EPEAT registered products, go to https://www.hp.com/us-en/sustainable-impact/document-reports.html

Declaration of the Presence Condition of the Restricted Substances Marking (Taiwan)

台灣 限用物質含有情況標示聲明書

Taiwan Declaration of the Presence Condition of the Restricted Substances Marking

單元 Unit	限用物質及其化學符號 Restricted substances and its chemical symbols					
	鉛 Lead (Pb)	汞 Mercury (Hg)	鎘 Cadmium (Cd)	六價鉻 Hexavalent chromium (Cr^{+6})	多溴聯苯 Polybrominated biphenyls (PBB)	多溴二苯醚 Polybrominated diphenyl ethers (PBDE)
列印引擎 Print engine	—	O	O	O	O	O
外殼和紙匣 External Casing and Trays	O	O	O	O	O	O
電源供應器 Power Supply	—	O	O	O	O	O
電線 Cables	O	O	O	O	O	O
印刷電路板 Print printed circuit board	—	O	O	O	O	O
控制面板 Control panel	—	O	O	O	O	O
碳粉匣 Cartridge	O	O	O	O	O	O
掃描器組件 Scanner assembly	—	O	O	O	O	O

備考1. 〝超出0.1 wt %〞及〝超出0.01 wt %〞係指限用物質之百分比含量超出百分比含量基準值。
Note 1：〝Exceeding 0.1 wt %〞and 〝exceeding 0.01 wt %〞indicate that the percentage content of the restricted substance exceeds the reference percentage value of presence conditn.

備考2. 〝O〞係指該項限用物質之百分比含量未超出百分比含量基準值。
Note 2：〝O〞indicates that the percentage content of the restricted substance does not exceed the percentage of reference value of presence.

備考3. 〝—〞係指該項限用物質為排除項目。
Note 3：The 〝–〞indicates that the restricted substance corresponds to the exemption.

TWR-LI-PE-MFP-02

若要存取產品的最新使用指南或手冊，請前往 www.support.hp.com。選取**搜尋您的產品**，然後依照 畫面上的指示繼續執行。

To access the latest user guides or manuals for your product, go to www.support.hp.com. Select **Find your product**, and then follow the on-screen instructions.

For more information

Additional environmental information is available from HP, including:

- Product environmental profile sheets
- Environmental management information
- Product return and recycling programs

Visit:

- HP Empower Customer Sustainability
- HP Recycling

D Regulatory information

This section describes the regulatory statements.

Battery statements

Reese's Law

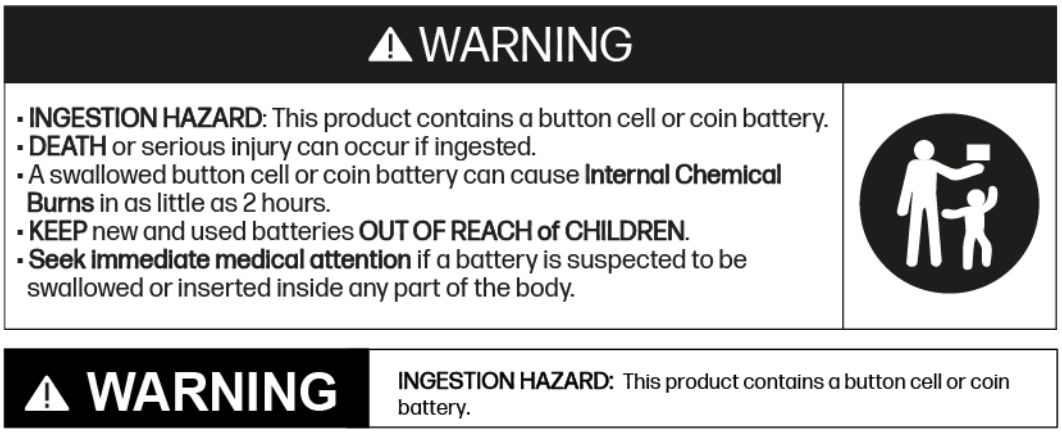

- Remove and immediately recycle or dispose of used batteries according to local regulations and keep away from children. Do NOT dispose of batteries in household trash or incinerate.
- Even used batteries may cause severe injury or death.
- Call a local poison control center for treatment information.
- Non-rechargeable batteries are not to be recharged.
- Do not force discharge, recharge, disassemble, heat above (manufacturer's specified temperature rating) or incinerate. Doing so may result in injury due to venting, leakage or explosion resulting in chemical burns.
- This product contains a non-replaceable battery. It is NOT intended to be replaced.
- This product uses a NON replaceable battery. The coin/button cell battery type/model could be either: CR1632, CR1225 or CR2032.
- The nominal battery voltage of this battery is 3v DC.

UK battery warning

Unfortunately, it is not obvious when a button or coin battery is stuck in a child’s oesophagus (food pipe). There are no specific symptoms associated with this. The child might:

- Cough, gag or drool a lot
- Appear to have a stomach upset or a virus
- Be sick

- Point to their throat or stomach
- Have a pain in their abdomen, chest or throat
- Be tired or lethargic
- Be quieter or more clingy than usual or otherwise “not themselves”
- Lose their appetite or have a reduced appetite
- Not want to eat solid food/be unable to eat solid food

These sorts of symptoms vary or fluctuate, with the pain increasing and then subsiding.

A specific symptom to button and coin battery ingestion is vomiting fresh (bright red) blood. If the child does this, seek immediate medical help.

The lack of clear symptoms is why it is important to be vigilant with “flat” or spare button or coin batteries in the home and the products that contain them.

India battery waste statement

India Battery Waste Management (BWM) Rules
EPR Registration No: 141163

Regulatory statements

The printer meets product requirements from regulatory agencies in your country/region.

European Union and United Kingdom Regulatory Notice

Products bearing the CE marking and UKCA marking comply with one or more of the following EU Directives and/or equivalent UK Statutory Instruments as may be applicable: Low Voltage Directive 2014/35/EU, EMC Directive 2014/30/EU, Eco Design Directive 2009/125/EC, RED 2014/53/EU, RoHS Directive 2011/65/EU. Compliance with these directives is assessed using applicable European Harmonized Standards. The full EU and UK Declaration of Conformity can be found at the following website: www.hp.com/go/certificates (Search with the product model name or its Regulatory Model Number (RMN), which may be found on the regulatory label.)

The point of contact for regulatory matters is: Email techregshelp@hp.com

The EU point of contact for regulatory matters is:

HP Deutschland GmbH, HP HQ-TRE, 71025 Boeblingen, Germany

The UK point of contact for regulatory matters is:

HP Inc UK Ltd, Regulatory Enquiries, Earley West, 300 Thames Valley Park Drive, Reading, RG6 1PT

Regulatory model identification numbers

For regulatory identification purposes, your product is assigned a regulatory model number. Regulatory model numbers should not be confused with marketing names or product numbers.

Regulatory model identification numbers

Product model number	Regulatory model number
HP LaserJet MFP M248d	SHNGC-2501-00
HP LaserJet MFP M246dw	SHNGC-2501-01
HP LaserJet MFP M248dw	
HP LaserJet MFP M248sdn	
HP LaserJet MFP M248sdng	
HP LaserJet MFP M239sdw	
HP LaserJet MFP M246sdw	
HP LaserJet MFP M241sdw	
HP LaserJet MFP M248sdw	
HP LaserJet MFP M248sdwg	

FCC regulations

This equipment has been tested and found to comply with the limits for a Class B digital device, pursuant to Part 15 of the FCC rules. These limits are designed to provide reasonable protection against harmful interference in a residential installation. This equipment generates, uses, and can radiate radio frequency energy. If this equipment is not installed and used in accordance with the instructions, it may cause harmful interference to radio communications. However, there is no guarantee that interference will not occur in a particular installation. If this equipment does cause harmful interference to radio or television reception, which can be determined by turning the equipment off and on, the user is encouraged to try to correct the interference by one or more of the following measures:

- Reorient or relocate the receiving antenna.
- Increase separation between equipment and receiver.
- Connect equipment to an outlet on a circuit different from that to which the receiver is located.
- Consult your dealer or an experienced radio/TV technician.

NOTE: Any changes or modifications to the printer that are not expressly approved by HP could void the user's authority to operate this equipment.

Use of a shielded interface cable is required to comply with the Class B limits of Part 15 of FCC rules.

Canada - Industry Canada ICES-003 Compliance Statement

CAN ICES-3(B)/NMB-3(B)

Power cord instructions

Make sure your power source is adequate for the product voltage rating. The voltage rating is on the product label. The product uses either 110-127 Vac or 220-240 Vac and 50/60 Hz.

Connect the power cord between the product and a grounded AC outlet.

⚠ CAUTION: To prevent damage to the product, use only the power cord that is provided with the product.

Laser safety

The Center for Devices and Radiological Health (CDRH) of the U.S. Food and Drug Administration has implemented regulations for laser products manufactured since August 1, 1976. Compliance is mandatory for products marketed in the United States. The device is certified as a “Class 1” laser product under the U.S. Department of Health and Human Services (DHHS) Radiation Performance Standard according to the Radiation Control for Health and Safety Act of 1968. Since radiation emitted inside the device is completely confined within protective housings and external covers, the laser beam cannot escape during any phase of normal user operation.

⚠ WARNING! Using controls, making adjustments, or performing procedures other than those specified in this user guide may result in exposure to hazardous radiation.

For other US/Canada regulatory matters, please contact:

HP Inc.

1501 Page Mill Rd, Palo Alto, CA 94304, USA

Email contact: (techregshelp@hp.com) or telephone contact: +1 (650) 857-1501

Laser statement for Finland

Luokan 1 laserlaite

HP LaserJet MFP M238–M249, laserkirjoitin on käyttäjän kannalta turvallinen luokan 1 laserlaite. Normaalissa käytössä kirjoittimen suojakotelointi estää lasersäteen pääsyn laitteen ulkopuolelle. Laitteen turvallisuusluokka on määritetty standardin EN 60825-1 (2014) mukaisesti.

VAROITUS !

Laitteen käyttäminen muulla kuin käyttöohjeessa mainitulla tavalla saattaa altistaa käyttäjän turvallisuusluokan 1 ylittävälle näkymättömälle lasersäteilylle.

VARNING !

Om apparaten används på annat sätt än i bruksanvisning specificerats, kan användaren utsättas för osynlig laserstrålning, som överskrider gränsen för laserklass 1.

HUOLTO

HP LaserJet MFP M238–M249 - kirjoittimen sisällä ei ole käyttäjän huollettavissa olevia kohteita. Laitteen saa avata ja huoltaa ainoastaan sen huoltamiseen koulutettu henkilö. Tällaiseksi huoltotoimenpiteeksi ei katsota väriainekasetin vaihtamista, paperiradan puhdistusta tai muita käyttäjän käsikirjassa lueteltuja, käyttäjän tehtäväksi tarkoitettuja ylläpitotoimia, jotka voidaan suorittaa ilman erikoistyökaluja.

VARO !

Mikäli kirjoittimen suojakotelo avataan, olet alttiina näkymättömällelasersäteilylle laitteen ollessa toiminnassa. Älä katso säteeseen.

VARNING !

Om laserprinterns skyddshölje öppnas då apparaten är i funktion, utsättas användaren för osynlig laserstrålning. Betrakta ej strålen.

Tiedot laitteessa käytettävän laserdiodin säteilyominaisuuksista: Aallonpituus 775-795 nm Teho 5 m W Luokan 3B laser.

GS statement (Germany)

Das Gerät ist nicht für die Benutzung im unmittelbaren Gesichtsfeld am Bildschirmarbeitsplatz vorgesehen. Um störende Reflexionen am Bildschirmarbeitsplatz zu vermeiden, darf dieses Produkt nicht im unmittelbaren Gesichtsfeld platziert werden.

Das Gerät ist kein Bildschirmarbeitsplatz gemäß BildscharbV. Bei ungünstigen Lichtverhältnissen (z. B. direkte Sonneneinstrahlung) kann es zu Reflexionen auf dem Display und damit zu Einschränkungen der Lesbarkeit der dargestellten Zeichen kommen.

Die Bilddarstellung dieses Gerätes ist nicht für verlängerte Bildschirmtätigkeiten geeignet.

Nordic Statements (Denmark, Finland, Norway, Sweden)

Denmark:

Apparatets stikprop skal tilsuttes en stikkontakt med jord, som giver forbindelse til stikproppens jord.

Finland:

Laite on liitettävä suojakoskettimilla varustettuun pistorasiaan.

Norway:

Apparatet må tilkoples jordet stikkontakt.

Sweden:

Apparaten skall anslutas till jordat uttag.

Eurasian Conformity (Armenia, Belarus, Kazakhstan, Kirgizstan, Russia)

Производитель и дата производства

HP Inc.

Адрес: 1501 Page Mill Road, Palo Alto, California 94304, U.S.

Дата производства зашифрована в 10-значном серийном номере, расположенном на наклейке со служебной информацией изделия. 4-я, 5-я и 6-я цифры обозначают год и неделю производства. 4-я цифра обозначает год, например, «3» обозначает, что изделие произведено в «2013» году. 5-я и 6-я цифры обозначают номер недели в году производства, например, «12» обозначает «12-ю» неделю.

Өндіруші және өндіру мерзімі

HP Inc.

Мекенжайы: 1501 Page Mill Road, Palo Alto, California 94304, U.S.

Өнімнің жасалу мерзімін табу үшін өнімнің қызмет көрсету жапсырмасындағы 10 таңбадан тұратын сериялық нөмірін қараңыз. 4-ші, 5-ші және 6-шы сандар өнімнің жасалған жылы мен аптасын көрсетеді. 4-ші сан жылын көрсетеді, мысалы «3» саны «2013» дегенді білдіреді. 5-ші және 6-шы сандары берілген жылдың қай аптасында жасалғанын көрсетеді, мысалы, «12» саны «12-ші» апта дегенді білдіреді.

Местные представители

Россия: ООО "Эйч Пи Инк",

Российская Федерация, 125171, г . Москва, Ленингра дское шоссе, 1 6А, стр.3,

Телефон/факс: +7 495 797 35 00 / +7 499 92132 50

Казахстан: Филиал компании "ЭйчПи Глобал Трэйдинг Би.Ви.", Республика Казахстан, 050040, г. Алматы, Бостандыкский район, проспект Аль-Фараби, 77/7,

Телефон/факс: + 7 7 27 355 35 52

Жергілікті өкілдіктері

Ресей: ООО "Эйч Пи Инк",

Ресей Федерациясы, 125171, Мәскеу, Ленинград шоссесі, 16А блок 3,

Телефон/факс: +7 495 797 35 00 / +7 499 92132 50

Қазақстан: "ЭйчПи Глобал Трэйдинг Би.Ви." компаниясының Қазақстандағы филиалы, Қазақстан Республикасы, 050040, Алматы к., Бостандык ауданы, Әл- Фараби даңғылы, 77/7,

Телефон/факс: +7 727 355 35 52

Wireless statements

The statements in this section apply to wireless-capable printers only.

FCC compliance statement—United States

Exposure to radio frequency radiation

⚠ CAUTION: The radiated output power of this device is far below the FCC radio frequency exposure limits. Nevertheless, the device shall be used in such a manner that the potential for human contact during normal operation is minimized.

In order to avoid the possibility of exceeding the FCC radio frequency exposure limits, human proximity to the antenna shall not be less than 20 cm (8 in) during normal operation.

This device complies with Part 15 of FCC Rules. Operation is subject to the following two conditions: (1) this device may not cause interference, and (2) this device must accept any interference, including interference that may cause undesired operation of the device.

⚠ CAUTION: Based on Section 15.21 of the FCC rules, changes of modifications to the operation of this product without the express approval by HP may invalidate its authorized use.

Australia statement

This device incorporates a radio-transmitting (wireless) device. For protection against radio transmission exposure, it is recommended that this device be operated no less than 20 cm from the head, neck, or body.

Belarus statement

В соответствии с Постановлением Совета Министров Республики Беларусь от 24 мая 2017 года № 383 (об описании и порядке применения знака соответствия к техническому регламенту Республики Беларусь) продукция, требующая подтверждения соответствия техническому регламенту Республики Беларусь, размещенная на рынке Республики Беларусь, должна быть маркирована знаком соответствия TP BY.



Brazil ANATEL statement

Este equipamento não tem direito à proteção contra interferência prejudicial e não pode causar interferência em sistemas devidamente autorizados.

Para maiores informações consulte o site da ANATEL – www.anatel.gov.br

Canadian statements

For Indoor Use. This digital apparatus does not exceed the Class B limits for radio noise emissions from digital apparatus as set out in the radio interference regulations of the Canadian Department of Communications. The internal wireless radio complies with RSS 210 of Industry Canada.

Pour lusage d´intérieur. Le présent appareil numérique ńémet pas de bruits radioélectriques dépassant les limites applicables aux appareils numériques de Classe B prescribes dans le règlement sur le brouillage radioélectrique édicté par le Ministère des Communications du Canada. Le composant RF interne est conforme à la norme CNR-210 d´Industrie Canada.

China CMIIT Wireless statements

中国无线电发射设备通告

型号核准代码显示在产品本体的铭牌上。

Korean statement

무선 전용제품:

해당 무선설비는 전파혼신 가능성이 있음으로 인명안전과 관련된 서비스는 할 수 없음. (무선모듈제품이 설치되어있는경우)

Taiwan region statement (Traditional Chinese)

取得審驗證明之低功率射頻器材，非經核准，公司、商號或使用者均不得擅自變更頻率、加大功率或變更原設計之特性及功能。低功率射頻器材之使用不得影響飛航安全及干擾合法通信；經發現有干擾現象時，應立即停用，並改善至無干擾時方得繼續使用。前述合法通信，指依電信管理法規定作業之無線電通信。低功率射頻器材須忍受合法通信或工業、科學及醫療用電波輻射性電機設備之干擾。

應避免影響附近雷達系統之操作。

高增益指向性天線只得應用於固定式點對點系統。

Products with 5 GHz Operation Industry of Canada

⚠ CAUTION: When using IEEE 802.11a wireless LAN, this product is restricted to indoor use, due to its operation in the 5.15- to 5.25-GHz frequency range. Industry Canada requires this product to be used indoors for the frequency range of 5.15 GHz to 5.25 GHz to reduce the potential for harmful interference to co-channel mobile satellite systems. High-power radar is allocated as the primary user of the 5.25- to 5.35-GHz and 5.65- to 5.85-GHz bands. These radar stations can cause interference with and/or damage to this device.

Lors de l'utilisation d'un réseau local sans fil IEEE 802.11a, ce produit est réservé à une utilisation en intérieur en raison de sa plage de fréquences, comprise entre 5,15 et 5,25 GHz. Industrie Canada recommande l'utilisation en intérieur de ce produit pour la plage de fréquences comprise entre 5,15 et 5,25 GHz afin de réduire les interférences nuisibles potentielles avec les systèmes de satellite portables utilisant le même canal. Le radar à haute puissance est défini comme étant le principal utilisateur des bandes 5,25 à 5,35 GHz et 5,65 à 5,85 GHz. Ces stations radar peuvent provoquer des interférences sur ce périphérique et/ou l'endommager.

Taiwan region NCC Statement:(Only for 5GHz)

應避免影響附近雷達系統之操作。

Exposure to Radio Frequency Radiation (Canada)

⚠ WARNING! Exposure to Radio Frequency Radiation. The radiated output power of this device is below the Industry Canada radio frequency exposure limits. Nevertheless, the device should be used in such a manner that the potential for human contact is minimized during normal operation.

⚠ WARNING! Exposition aux émissions de fréquences radio. La puissance de sortie émise par ce périphérique est inférieure aux limites fixées par Industrie Canada en matière d'exposition aux fréquences radio. Néanmoins, les précautions d'utilisation du périphérique doivent être respectées afin de limiter tout risque de contact avec une personne.

To avoid the possibility of exceeding the Industry Canada radio frequency exposure limits, human proximity to the antennas should not be less than 20 cm (8 inches).

Pour éviter tout dépassement des limites fixées par Industrie Canada en matière d'exposition aux fréquences radio, la distance entre les utilisateurs et les antennes ne doit pas être inférieure à 20 cm (8 pouces).

European regulatory notice

The telecommunications functionality of this product may be used in the following European countries/regions:

Austria, Belgium, Bulgaria, Cyprus, Czech Republic, Denmark, Estonia, Finland, France, Germany, Greece, Hungary, Iceland, Ireland, Italy, Latvia, Liechtenstein, Lithuania, Luxembourg, Malta, Netherlands, Norway, Poland, Portugal, Romania, Slovak Republic, Slovenia, Spain, Sweden, Switzerland, and United Kingdom.

Notice for use in Russia

Существуют определенные ограничения по использованию беспроводных сетей (стандарта 802.11 b/g) с рабочей частотой 2,4 ГГц: Данное оборудование может использоваться внутри помещений с использованием диапазона частот 2400-2483,5 МГц (каналы 1-13). При использовании внутри помещений максимальная эффективная изотропно–излучаемая мощность (ЭИИМ) должна составлять не более 100мВт.

Mexico statement

Aviso para los usuarios de México

“La operación de este equipo está sujeta a las siguientes dos condiciones: (1) es posible que este equipo o dispositivo no cause interferencia perjudicial y (2) este equipo o dispositivo debe aceptar cualquier interferencia, incluyendo la que pueda causar su operación no deseada."

Para saber el modelo de la tarjeta inalámbrica utilizada, revise la etiqueta regulatoria de la impresora.

Thailand statement

เครื่องวิทยุคมนาคมนี้มีระดับการแผ่คลื่นแม่เหล็กไฟฟ้าสอดคล้องตามมาตรฐานความปลอดภัยต่อสุขภาพของมนุษย์จากการใช้เครื่องวิทยุคมนาคมที่คณะกรรมการกิจการโทรคมนาคมแห่งชาติประกาศกำหนด

This radio communication equipment has the electromagnetic field strength in compliance with the Safety Standard for the Use of Radio Communication Equipment on Human Health announced by the National Telecommunications Commission.

Vietnam Telecom



NOTE: Telecom wireless marking for ICTQC Type approved products.