IMMERSION BLENDER
VARIABLE SPEED, 900W
OPERATION MANUAL

For California Customers
WARNING: Cancer and Reproductive Harm - www.P65Warnings.ca.gov

Model	Description	Power	Electrical Specs	Plug Type	Overall Dimensions			Product Weight
					Length	Depth	Height	
WIB-90012	12" Shaft	900W	120V/60Hz/7.5A	NEMA 5-15P	6.1" (154 mm)	5.2" (131 mm)	26.8" (681 mm)	9.7 lbs (4.4 kg)
WIB-90014	14" Shaft						28.8" (732 mm)	10 lbs (4.5 kg)
WIB-90016	16" Shaft						30.8" (782 mm)	10.2 lbs (4.6 kg)
WIB-90018	18" Shaft						32.8" (833 mm)	10.4 lbs (4.7 kg)
WIB-90021	21" Shaft						35.8" (910 mm)	10.7 lbs (4.8 kg)

BEFORE OPERATING ANY EQUIPMENT, READ AND FAMILIARIZE YOURSELF WITH THESE USE AND SAFETY INSTRUCTIONS

Congratulations on the purchase of your WINCO® equipment. WINCO takes pride in the quality of its products. When used as intended, and with proper care and maintenance, you will experience years of reliable operation from this equipment. To ensure best results, it is important that you read and follow the instructions in this manual carefully. It's important to save these instructions for future reference.

Form No. WIB-900 Manual - R00-0626

Package Contents & Components

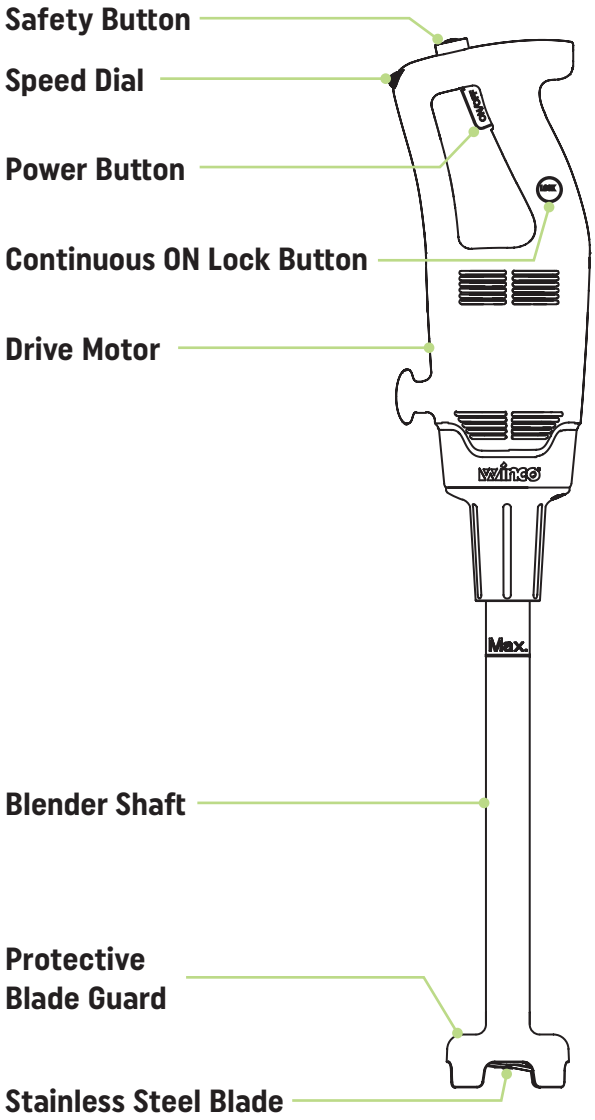

Spare High Power Blade

Blade Removal Tool

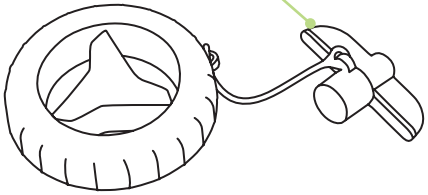

Wall Hanger

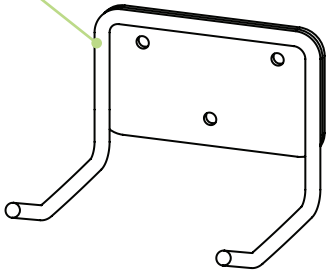

Accessories & Replacement Parts

Part #	Description
WIB-SHAFT12	12" Shaft
WIB-SHAFT14	14" Shaft
WIB-SHAFT16	16" Shaft
WIB-SHAFT18	18" Shaft
WIB-SHAFT21	21" Shaft

Part #	Description
WIB-BLADETOOL	Blade Removal Tool
WIB-WHISKHP	High Power Whisk
WIB-WHISKHPSET	High Power Whisk Paddles
WIB-BLADEHP	High Power Blade
WIB-WALLHANGER	Wall Hanger

Important Safety Instructions

When using electrical appliances, basic safety precautions must always be followed, including the following. Failure to follow these instructions may result in fire, electrical shock, personal injury, or property damage.

1. **Disconnect Power**
   Always unplug this appliance from the electrical outlet when it is not in use and before cleaning.
2. **Electric Shock Hazard**
   WARNING: To reduce the risk of electric shock, DO NOT immerse the motor housing, power cord, or plug in water or any other liquid. Only the blade guard and drive shaft are designed for immersion. No other part of this appliance is intended to be submerged.
3. **Intended Users**
   This appliance is not intended for use by persons (including children) with reduced physical, sensory, or mental capabilities, or by individuals lacking experience or knowledge, unless they are supervised or have received adequate instruction regarding safe use from a person responsible for their safety.
4. **Moving Parts Hazard**
   WARNING: Keep hands, hair, clothing, and utensils away from the blade and blending container during operation to avoid serious injury and/or damage to the appliance. A spatula may be used only when the appliance is turned off. Avoid contact with moving parts at all times.
5. **Damaged Appliance**
   Do not operate this appliance if the power cord or plug is damaged, if the appliance malfunctions, or if it has been dropped or damaged in any manner. Return the appliance to an authorized service agent for examination, repair, or mechanical or electrical adjustment.
6. **Attachments**
   The use of attachments or accessories not recommended or sold by Winco for this specific model may result in fire, electric shock, or personal injury.
7. **Location of Use**
   This appliance is intended for indoor use only. Do not use outdoors.
8. **Cord Safety**
   Do not allow the power cord to hang over the edge of a table or countertop, or to come into contact with hot surfaces, including stovetops. Do not carry the unit by the power cord. If the supply cord is damaged, it must be replaced by an authorized service agent or a qualified technician in order to avoid a hazard.
9. **Heat Sources**
   Do not place this appliance on or near a hot gas or electric burner, or inside a heated oven.
10. **Sharp Blade**
    CAUTION: The blade is sharp. Handle carefully to prevent injury. Always hold the blending shaft instead of the cutting edge when handling and cleaning the blade.
11. **Vent Holes**
    Avoid splashing particles or liquids into the vent holes of the unit body. These can damage the internal components of the blender and result in a loss of function.
12. **Hot Liquids**
    WARNING: When blending liquids, especially hot liquids, use a tall container or blend small quantities at a time to reduce splashing and the risk of burns or other injuries.

Installing Attachments

⚠ WARNING

Pinch, Cut, and Crush Hazard

Make sure that the immersion blender is off and unplugged before installing or removing attachments and parts.

Blades are sharp! Use extreme care when handling.

DO NOT reach or insert utensils into the container while the immersion blender is running.

Failure to follow these instructions can result in broken bones, cuts, or other serious injury.

⚠ WARNING

Electrical Shock Hazard

Do not use an extension cord.

Do not put motor housing, cord or plug in water or any other liquid.

Failure to follow these instructions can result in death, fire, or electrical shock.

Blending Shaft

How to install:

1. Turn the blending shaft clockwise until it is tightened.

How to remove:

1. Turn in the counterclockwise direction.

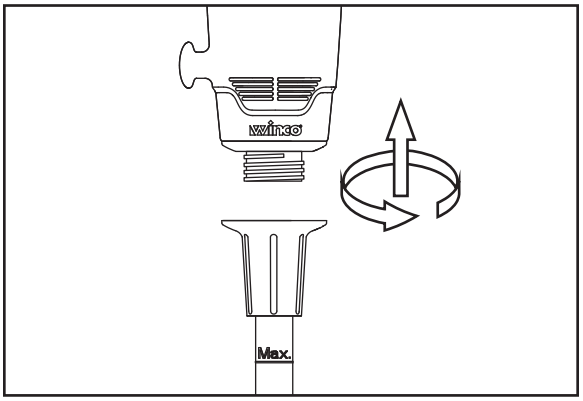

Whisk (sold separately)

How to install:

1. Insert the two whisk paddles into the whisk hub.
2. Insert the whisk hub into the threaded inner hole of the unit body. When inserting, align the slot of the connector with the ribs of the threaded inner hole to ensure that the step of connector is inserted in place.
3. Tighten the lock nut to fix the whisk hub firmly onto the body.

How to remove:

1. Loosen the lock nut.
2. Remove the whisk holder and then remove the whisks.

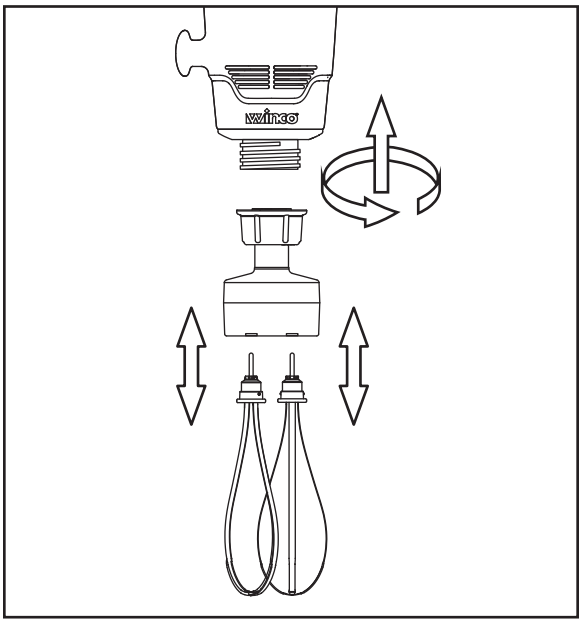

Operation Instructions

Prior to first use, Winco recommends wiping the appliance with a clean, lightly moistened cloth to remove any accumulated dust or residue. Rinse the metal blade portion of the immersion blender under running water. After rinsing, dry all components completely using a soft, absorbent towel. Be sure to review all instructions thoroughly to ensure proper operation and safe use.

⚠ WARNING

Pinch, Cut, and Crush Hazard

Make sure that the immersion blender is off and unplugged before installing or removing attachments and parts.

Blades are sharp! Use extreme care when handling.

DO NOT reach or insert utensils into the container while the immersion blender is running.

Failure to follow these instructions can result in broken bones, cuts, or other serious injury.

⚠ WARNING

Electrical Shock Hazard

Do not use an extension cord.

Do not put motor housing, cord or plug in water or any other liquid.

Failure to follow these instructions can result in death, fire, or electrical shock.

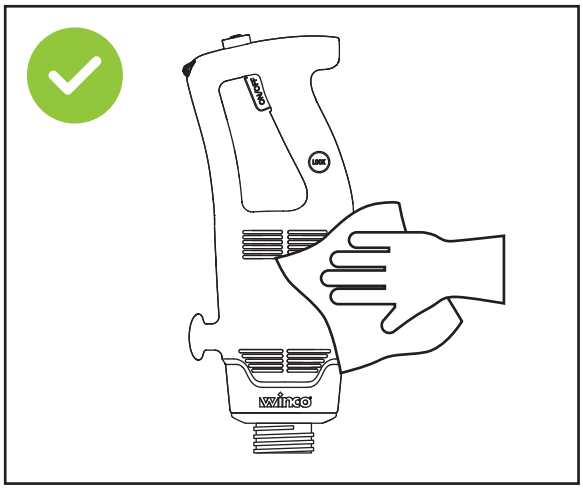

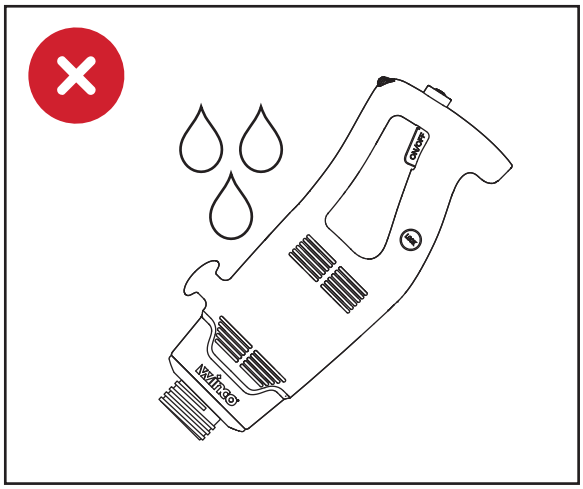

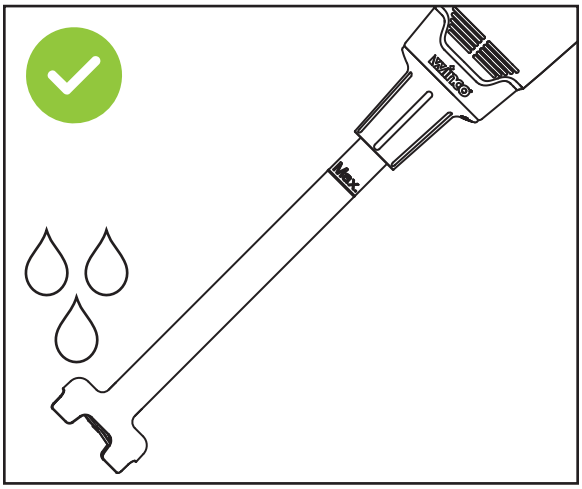

Starting & Stopping Operation - Blending Shaft

IMPORTANT: DO NOT exceed 3 minutes per operation cycle. After two consecutive cycles, let immersion blender rest for 1 minute.

1. Install the blending shaft.
2. Plug the drive motor into a power outlet.
3. Press the **safety button** and proceed to the next step within 5 seconds. If the unlocking fails after 5 seconds, press the safety button again.
4. Press the **power button** to start the immersion blender.
5. Release the **power button** and the unit will stop automatically.
6. The immersion blender has a **speed dial** control knob. Clockwise increases speed, counterclockwise decreases speed.

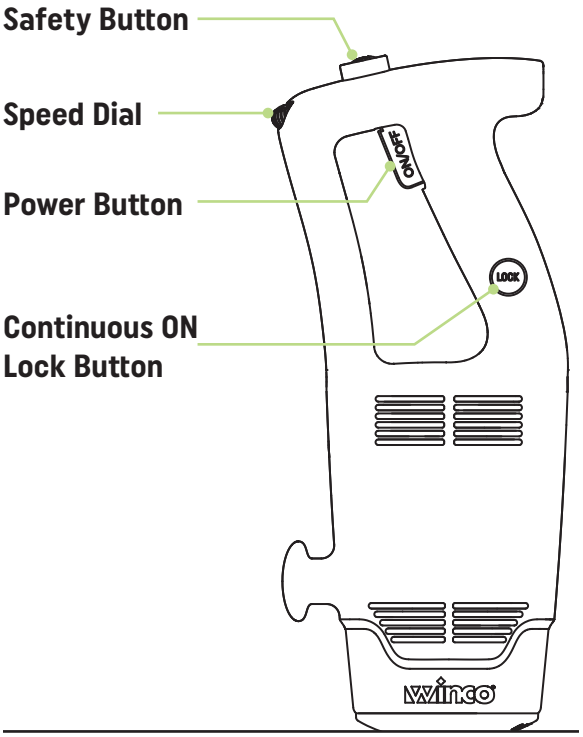

Continuous ON Function

After completing steps 1-5 above, proceed to the following steps:

1. Press and hold the lock button while the power button is pressed down. The lock button will light up and remain pressed.
2. Release the power button first and then release the lock button. The immersion blender will work continuously, and the red indicator light turns on and remains lit.
3. Press the power button again, the blender stops rotating. The lock button will release up and the red indicator light will turn off.

Note: During Continuous ON do not touch the power button when holding the blender to avoid turning it off.

Recommended Operation

For best performance and long equipment life, tilt the blender shaft at a slight angle to prevent the protective blade guard from touching the bottom of the container.

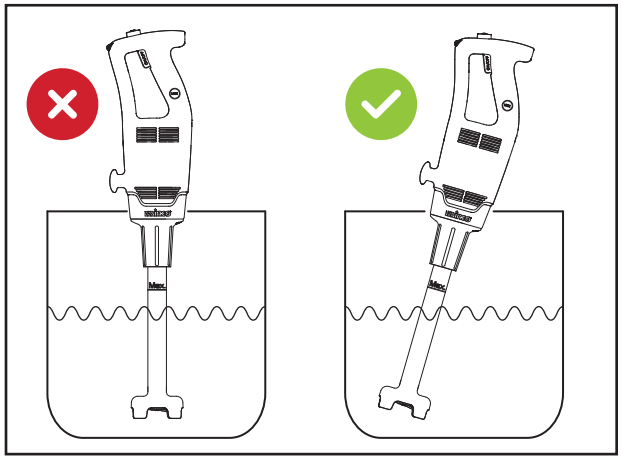

Starting & Stopping Operation - Whisk Attachment

IMPORTANT: DO NOT exceed 3 minutes per operation cycle. After two consecutive cycles, let immersion blender rest for 1 minute to prevent overheating and damage to internal gear components.

1. Install the whisk attachment.
2. Put the food to be whisked into a container.
3. Insert the power plug into the power socket.
4. Lower the whisk into the container.
5. Press the **safety button** and proceed to the next step within 5 seconds. If the unlocking fails after 5 seconds, press the safety button again.
6. Press the **power button** to start the immersion blender.
7. Release the **power button** and the unit will stop automatically.
8. The immersion blender has a **speed dial** control knob. Clockwise increases speed, counterclockwise decreases speed.

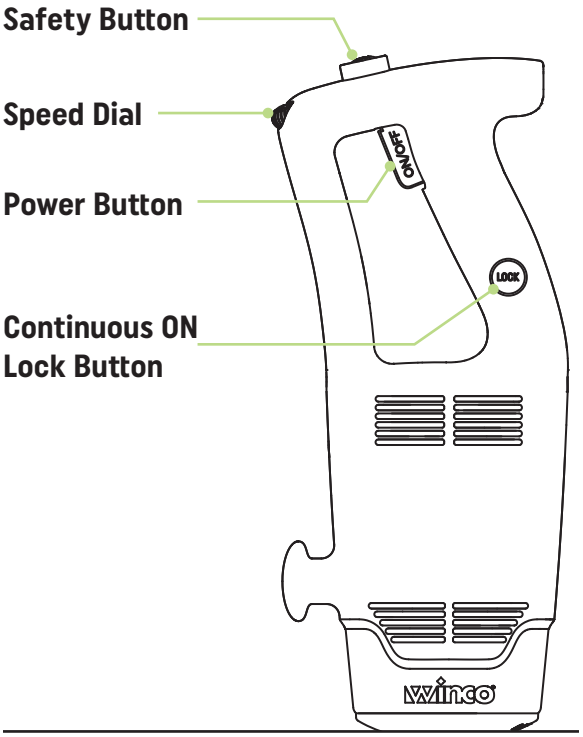

CLEANING AND MAINTENANCE

IMPORTANT: Always disconnect the Winco® ProFusion™ Immersion Blender from the power source before cleaning the stainless-steel blade.

The Winco ProFusion™ immersion blender must be properly cleaned and fully dried after every use by following the procedures outlined below. Increased cleaning frequency will help extend the service life of the equipment.

NOTE: Do not immerse the detachable blending shaft in water. Prolonged immersion in water will flush the lubricating oil out of the bearings.

REQUIREMENTS FOR FOOD SERVICE USE

- High alkaline cleaning agents are known to damage plastic components and rubber seals. Use a mild detergent when cleaning the blender and components.
- Use cleaning agents that are non-foaming detergents and sanitizers that are chlorine-based, containing at least 100 parts per million (PPM) of chlorine.
- The stainless steel shaft must be washed, rinsed, and sanitized:
  - Before first-time use
  - After each use
  - When the unit will remain unused for longer than one (1) hour
- The plastic motor housing must be cleaned and sanitized:
  - Before initial use
  - After every use

Cleaning and Sanitizing

1. Unplug the immersion blender.
2. Thoroughly rinse both the inside and outside surfaces of the stainless steel blender shaft under running water. Scrub and flush the area to remove as much food residue as possible.
3. Using a soft sponge or cloth dampened with cleaning solution, wipe down the exterior of the stainless steel shaft and the outer surface of the plastic motor housing.
4. Submerge approximately three-quarters of the stainless steel shaft into a container filled with the washing solution. Operate the blender at High speed for two (2) minutes.
5. Repeat steps 2 and 3 using clean rinse water instead of the detergent solution.
6. Stainless steel shafts **ARE** dishwasher safe.
7. Whisk paddles **ARE** dishwasher safe.
8. Whisk hub **IS NOT** dishwasher safe. Hand clean only.
9. Do not immerse the whisk hub or the blender shaft.
10. Do not immerse the plastic drive motor housing and prevent any liquid from getting into the housing or ventilation holes. Remove excess water from cleaning cloths and sponges before using them to clean the drive motor housing.

Removal and Installation of Blade Assembly

1. Align and insert the **Blade Wrench** with the **Blade Assembly**.
2. Align and insert the **Coupling Wrench** to the **Blending Shaft Head Coupling**.
3. Turn counterclockwise to remove the Blade, clockwise to tighten.

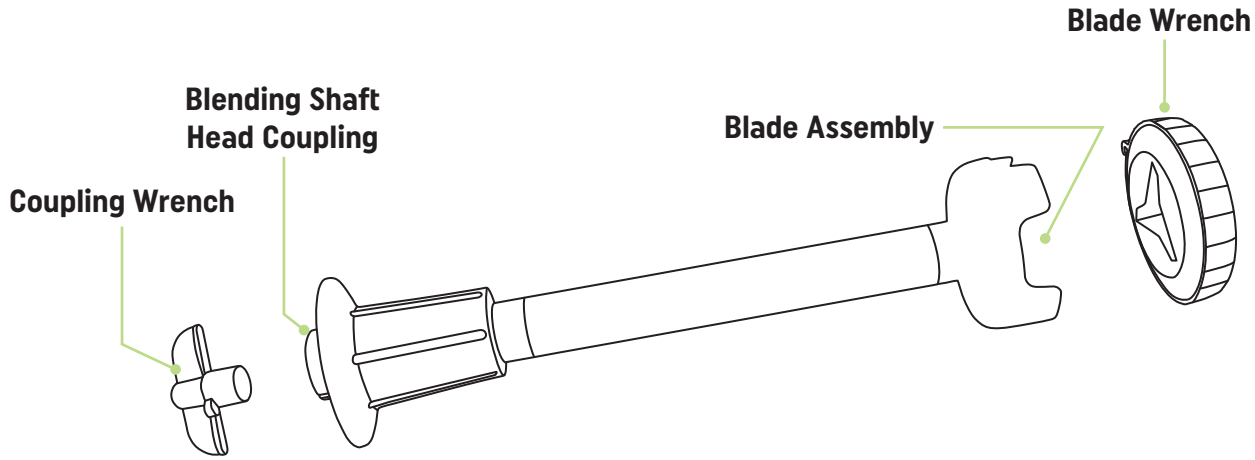

Wall Mount Bracket Installation

NOTE: The left hook is higher than the right hook to accommodate the immersion blender handle.

1. Align and mark holes of the wall bracket.
2. Drill holes into wall and insert anchors. Attach the wall bracket with the screws.
3. Hang the immersion blender from the handle as shown.

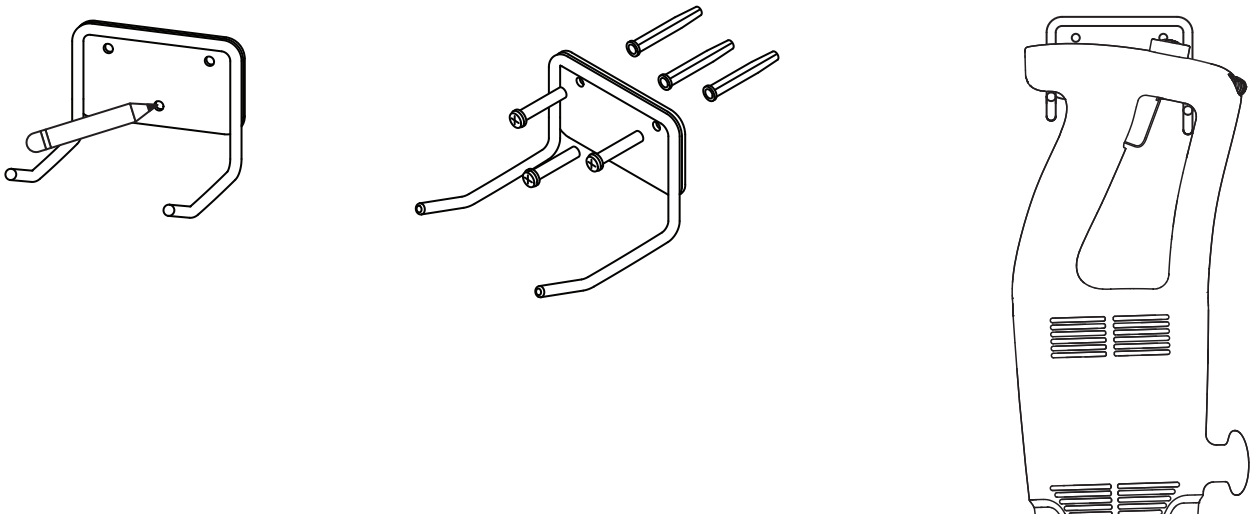

NEW JERSEY DISTRIBUTION CENTER
65 Industrial Road,
Lodi, NJ 07644

FLORIDA SHOWROOM & DISTRIBUTION CENTER
10800 NW 103rd Street,
Bldg 22, Ste 11, Miami, FL 33178

NEVADA DISTRIBUTION CENTER
3777 Marion Drive,
Las Vegas, NV 89115

Phone: 1-888-946-2682 **Fax:** 1-973-916-9959 **Email:** cs@wincous.com **Web:** www.wincous.com

4711 East Hefner Road, Oklahoma City, OK 73131