Z8
User Manual

Please read this instruction manual carefully before use
Please use the laser engraving machine correctly and safely

SAFETY INSTRUCTIONS

Thank you for purchasing the laser engraving machine. In order to better use and maintain this equipment, please read this manual carefully and follow the steps in the manual.

Important Statement!

All losses caused by improper use or failure to follow the steps in the manual shall be borne by the individual. The final right of interpretation of the manual belongs to our company, which also reserves the right to modify all information, data, technical details, etc. in this manual.

Safety Precautions

★Before operating the equipment, users must carefully read the manual and strictly follow the operating procedures.

★Laser processing may be risky, and users should carefully consider whether the object being processed is suitable for laser operation.

★The processing object and emissions should comply with local laws and regulations.

★The laser radiation may cause the following situations:

① Ignition of surrounding flammable materials;

② During laser processing, other radiation and toxic and harmful gases may be generated due to different processing objects;

③ Direct exposure to laser radiation can cause human harm. Firefighting equipment must be equipped in the use site. It is prohibited to stack flammable and explosive items around the workbench and equipment. At the same time, it must be well ventilated.

★The environment where the equipment is located should be dry, free of pollution, vibration, strong electricity, strong magnetism and other interference and influence. The working environment temperature is 5~30℃, and the working environment humidity is 30-65% rh (no condensation)

★Equipment operating voltage: AC100-240V.

★The engraving machine and other related equipment must be safely grounded before they can be turned on and operated.

★When the equipment is turned on, it is necessary to be on duty throughout the process. All power supplies must be cut off before leaving to prevent abnormal conditions. If any abnormal conditions occur, please turn off the power immediately!

★It is strictly forbidden to place any irrelevant total reflection or diffuse reflection objects in the equipment to prevent the laser from reflecting on the human body or flammable items.

★The equipment should be kept away from electrical equipment that is sensitive to electromagnetic interference, which may cause electromagnetic interference to it.

★There is high voltage or other potential dangers inside the laser equipment, and non-professionals are strictly prohibited from disassembling it.

Notice!

1. After the laser is turned on, it is strictly forbidden to aim at people, animals and flammable objects to avoid skin burns and fire.
2. The brightness of the laser is harmful to the eyes. Please do not look directly at the laser.
3. Keep your hands away from the machine when it is working to avoid injury
4. Turn off the power of the machine when it is not in use to avoid misoperation by a third party

Maintenance and Care

The laser module is a consumable. It is recommended to turn off the machine power for 10 minutes after 4 hours of engraving and 1 hour of cutting.

FCC WARNING

Warning

To assure continued compliance, any changes or modifications not expressly approved by the party.Responsible for compliance could void the user's authority to operate this equipment.

FCC Statement

This equipment complies with Part 15 of the FCC Rules. Operation is subject to the following two conditions:

(1) This device may not cause harmful interference, and

(2) This device must accept any interference received, including interference that may cause undesired operation.

NOTE: This equipment has been tested and found to comply with the limits for a Class B digital device, pursuant to part 15 of the FCC rules. These limits are designed to provide reasonable protection against harmful interference in a residential installation. This equipment generates, uses and can radiate radio frequency energy and, if not installed and used in accordance with the instructions, may cause harmful interference to radio communications.

However, there is no guarantee that interference will not occur in a particular installation. If this equipment does cause harmful interference to radio or television reception, which can be determined by turning the equipment off and on, the user is encouraged to try to correct the interference by one or more of the following measures:

-Reorient or relocate the receiving antenna.

-Increase the separation between the equipment and receiver.

-Connect the equipment into an outlet on a circuit different from that to which the receiver is connected.

-Consult the dealer or an experienced radio/TV technician for help.

FCC Radiation Exposure Statement:

The equipment complies with FCC Radiation exposure limits set forth for uncontrolled environment. This equipment should be installed and operated with minimum distance 20cm between the radiator and your body.

CONTENTS

01 Product Parameters 04

02 Products And Accessories 05

03 Functions & Accessories Introduction 07

04 Regular Product Maintenance 18

05 Supported Software Overview 19

06 Driver Installation 20

07 Software Download & Installation-For Windows 23

08 Software Download & Installation-For Mac/Phone 27

09 PC Connection 29

10 Mobile Connection 40

11 FAQ 44

01 PRODUCT PARAMETERS

Product Model	Z8
Main Body Material	ABS + High-Strength Metal
Laser Module	455nm: 5W 10W / 1064nm: 2W
Laser Wavelength	455nm / 1064nm
Input Voltage	455nm 5W: DC12V 4A / 455nm 10W: DC12V 5A / 1064nm 2W: DC12V 9A
Communication Interface	WiFi wireless connection USB Type-B wired connection, supporting Mac and Windows desktop applications
Cooling Method	Air-Cooled
Laser Lifespan	> 10000h
Laser Class	Class 1
Engraving Area	455nm 5W/10W: 200*100mm / 1064nm 2W: 180*100mm
Engraving Precision	0.01mm
Engraving Speed	90000mm/min
Engravable Materials	Paper, wood, plastic, leather, fabric, cardboard, stone, ceramics, stainless steel, coated metal, and other opaque materials
Supported Systems	Windows/Mac/Android/iOS
Supported Formats	JPEG/BMP/PNGJPG/GIF/DXF/PLT/HPGL

02 PRODUCTS AND ACCESSORIES

Product Model

TF Card

Card Reader

Power Supply

Type-B Data Cable

Marker Pen

Kraft Paper

Brush

User Manual

Wooden Board

Protective Goggles

Black Card

Optional Accessories

Air Purifier

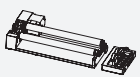

Rotating Module

TF Card Included Files

- Z8 01_Firmware
- Z8 Pro 02_Picture
- Z8 03_APP
- Z8 04_Windows
- Z8 05_MAC
- Z8 06_UserManual

Files in the TF card:

Z8 Firmware(C02-250702).bin

Firmware updates for the engraving machine (download to your computer before updating).

LaserTool_setupV1.1.5_en.exe

Firmware update software tool.

Z8 Lightburn Firmware.lbdev

Import this file into LightBurn when connecting the machine for the first time to improve software usability.

03 FUNCTIONS & ACCESSORIES INTRODUCTION

Front view

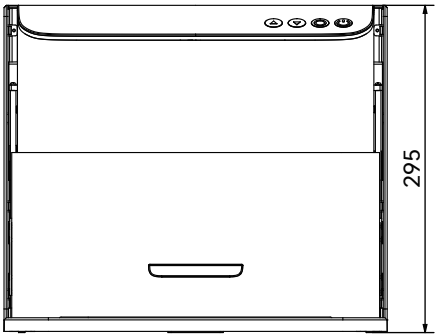

Top view

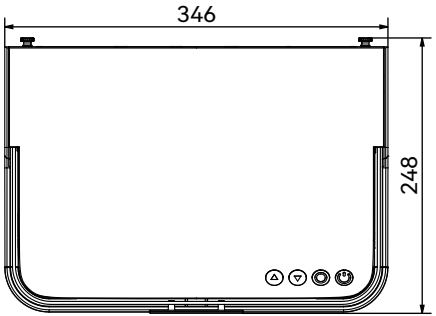

Right view

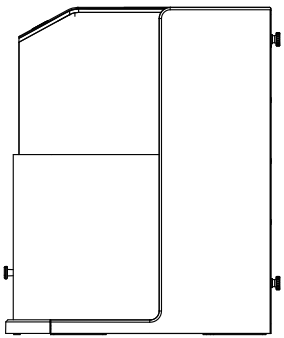

Back view

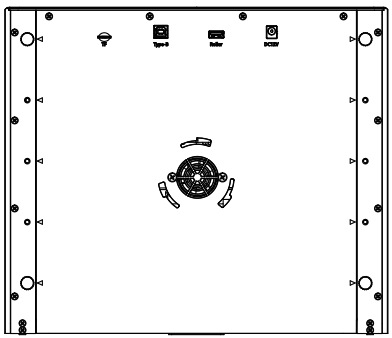

【 Function Description 】

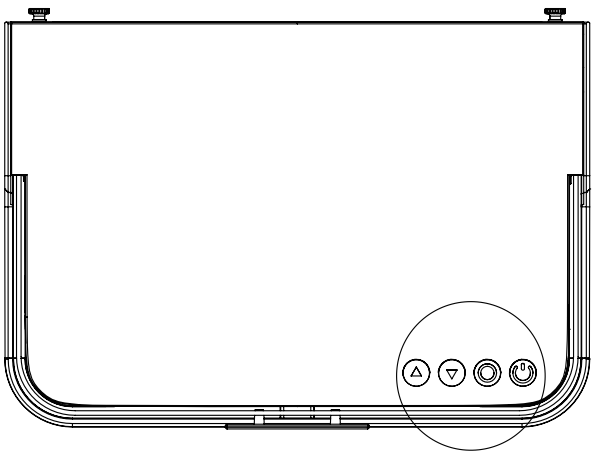

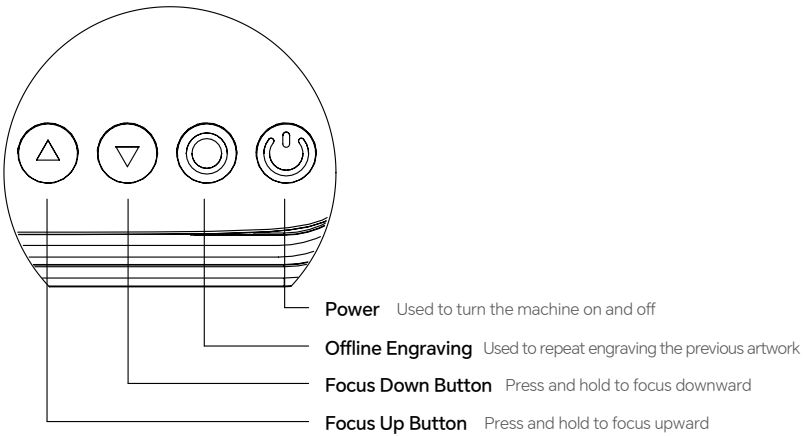

Offline Engraving Button Function Description

1. Generate engraving or cutting files (gcode) using LightBurn software and save them to the root directory of the TF card. Save the file name as: 001.nc
2. Insert the TF card into the machine before powering on. Connect the controller panel using the included power adapter and cable, then turn on the power switch on the side of the control panel.
3. Press the “Offline Engraving” button:
   a. Press briefly to automatically reset the machine and preview.
   b. Hold for over 3 seconds to enter engraving mode.
   c. Press briefly again to pause.
   d. Press briefly again to resume.
   e. Hold for over 3 seconds again to cancel engraving.

03 FUNCTIONS & ACCESSORIES INTRODUCTION

【 Function Description 】

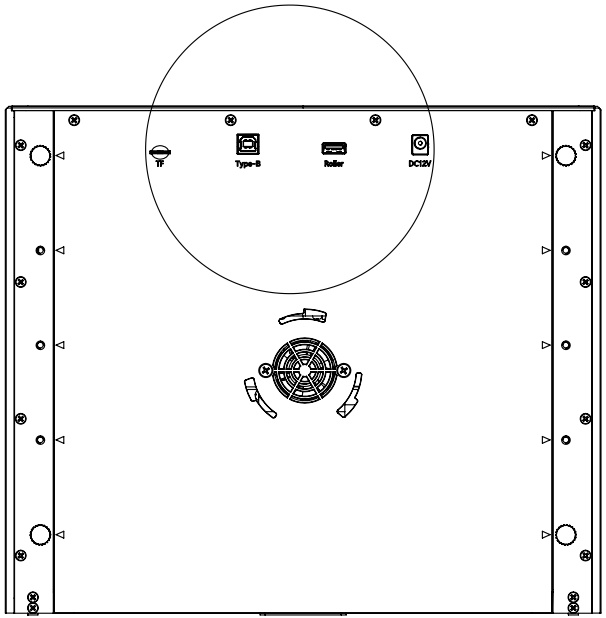

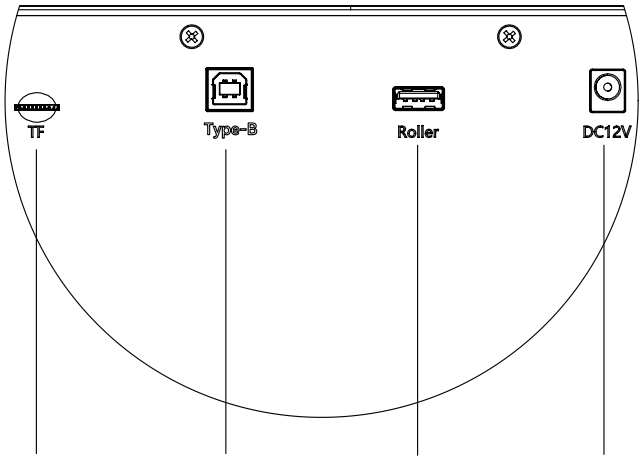

TF Card

Used to store engraving content (requires insertion when using with a mobile phone)

USB-PC

Used for connecting to a computer

Roller Interface

For connecting roller modules

Power Interface

For connecting a 12V power supply

【 Function Description 】

When the host machine is tilted from the horizontal plane and remains tilted for more than 1 second, the machine will stop running immediately and the laser module will stop laser output.

After entering the protection state, the machine must be restarted to restore normal function.

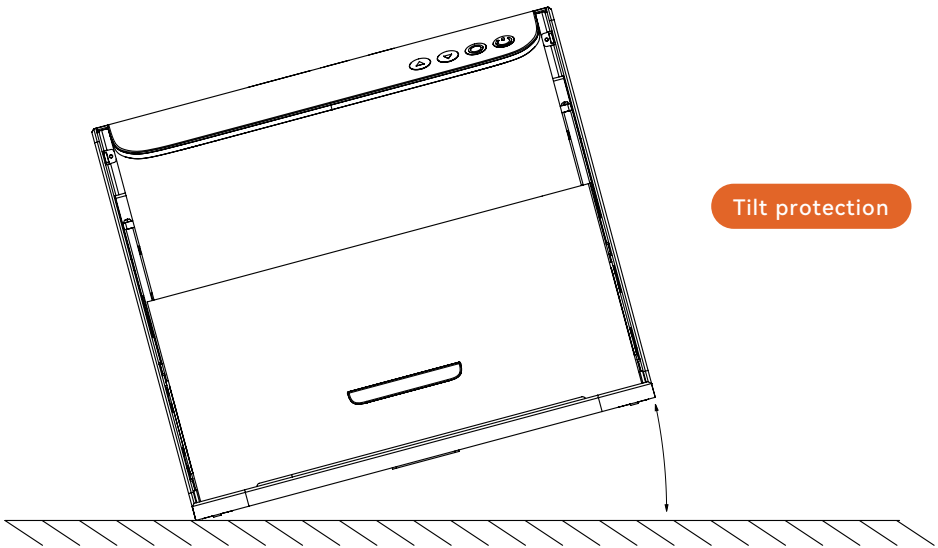

【 Function Description 】

When the light shield is opened, the laser module will immediately stop laser output.

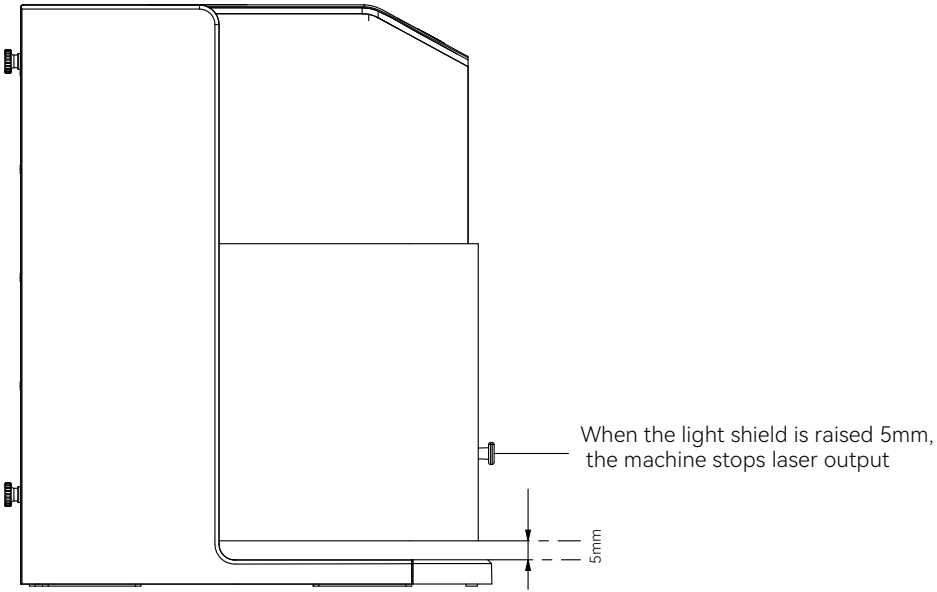

【 Product Focusing 】

Press and hold the “Up Focus Button” and “Down Focus Button” on the machine's top cover to adjust the red focus dots until both merge into a single red focus dot.

(At this point, laser focusing is complete, indicating the optimal engraving point.)

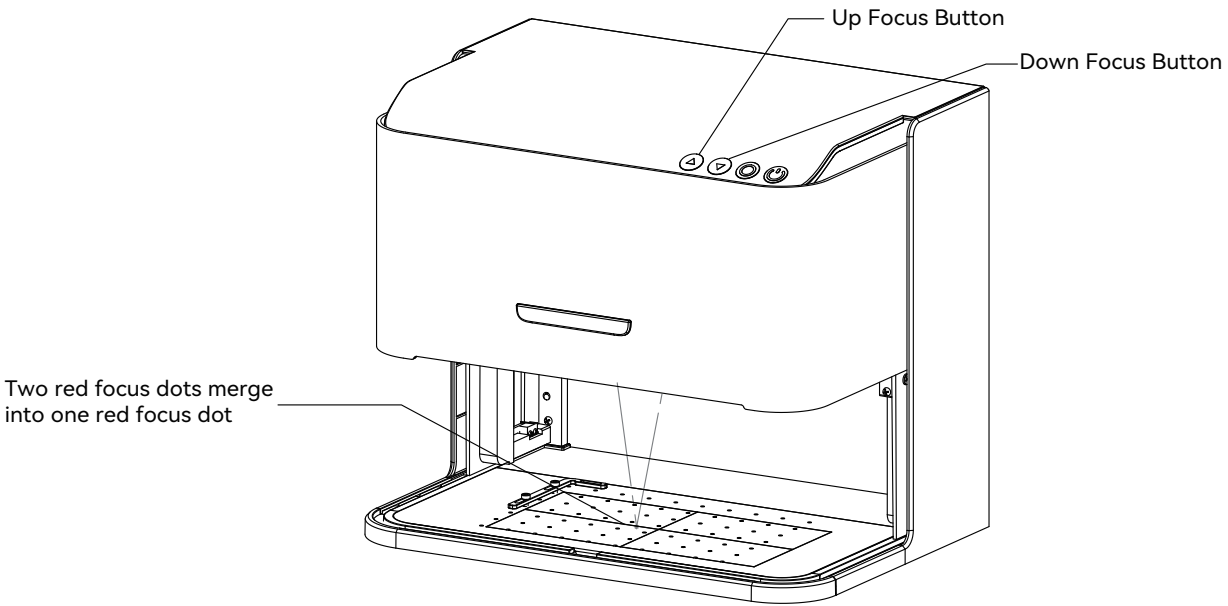

【Height Adjustment Mode Usage】

When engraving different products, adjust the engraving height accordingly. Loosen the four M4×10 thumb screws at the rear, set the desired engraving height, then tighten these four M4×10 thumb screws to secure the product height.

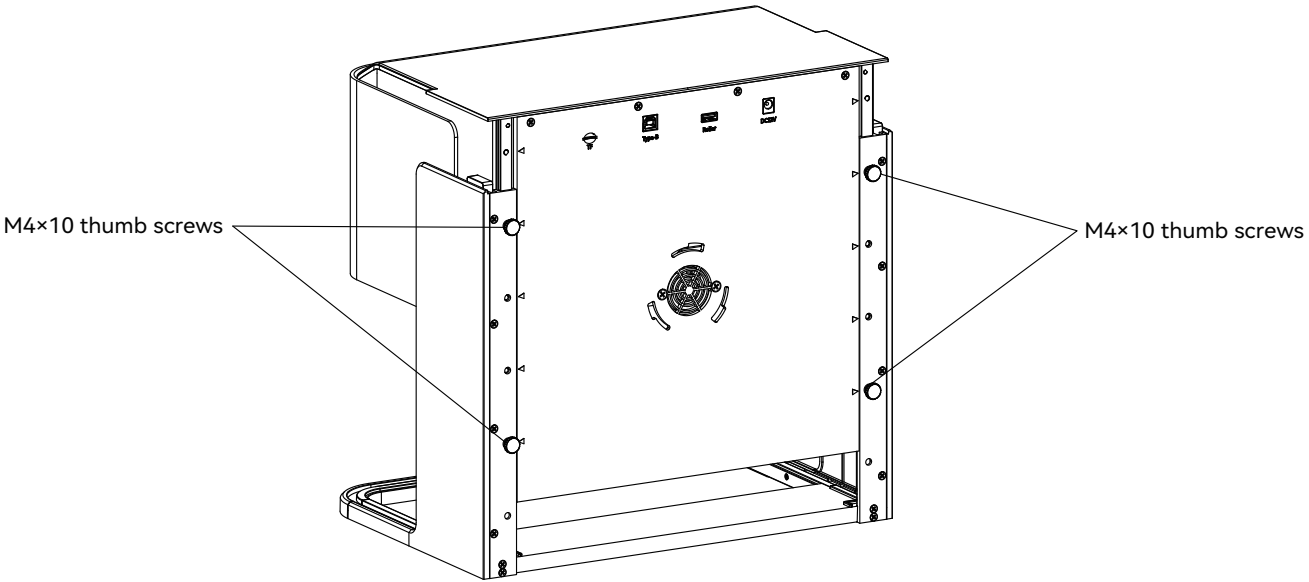

【Light Indicators】

A gradual light gradient indicates normal operation. If the light shield is opened during operation, the lights will switch to rapid flashing mode.

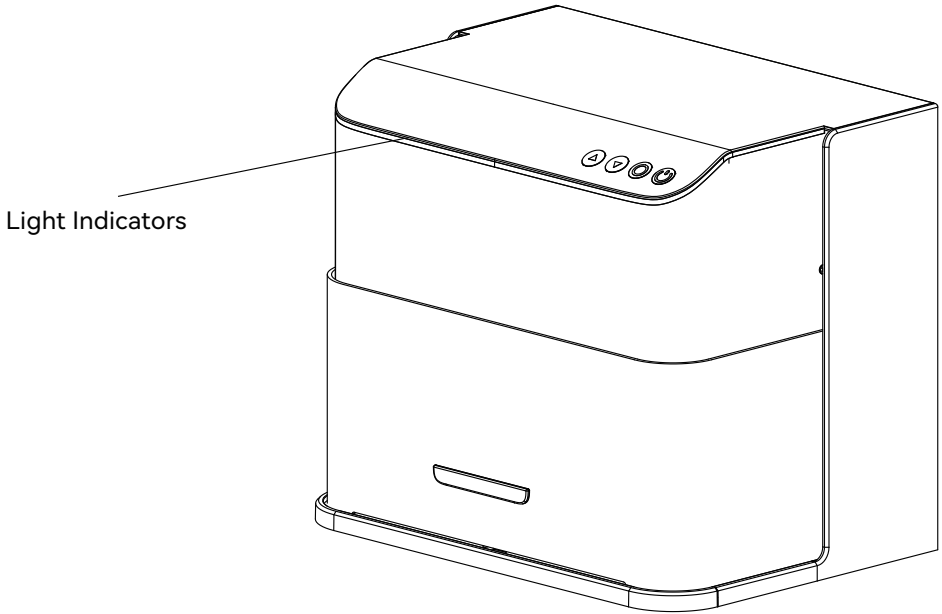

Engraving on tapered cylinders:

For example, with popular glass tumblers, it is often best to support the narrow end of the cylinder so that the horizontal edge faces the laser. The swivel includes an end support.

When engraving with rotation, the -axis goes through its normal scanning motion, but the y-axis remains stationary while the rotation provides movement in that direction.

The spinner can hold a wide variety of round objects, from something as thin as a pencil to a 32-ounce Yeti-style glass.

It consists of a fixed axis and a moving axis that can be locked into 1 of 4 positions. The applicable diameter range for each position is marked on the left side of the turntable.

Suitable for fixed shaft switching with diameters: >89mm, 64- 89mm, 38—64 mm,19-38mm, 6-19mm, switching between different positions.

[Note]

Loosen the knobs at both ends at the same time, push the pulley to the desired position, and then lock the knobs at both ends at the same time

When using rotary engraving vector content, we recommend engraving at a speed <800mm/min.

When connecting the product to the MD19 rotary module, first unscrew the four screws on the back. After adjusting to the required engraving height, secure the product height with these four screws. Connect the roller interface to the motor terminal interface of the MD19 dual-axis rotary module using a data cable.

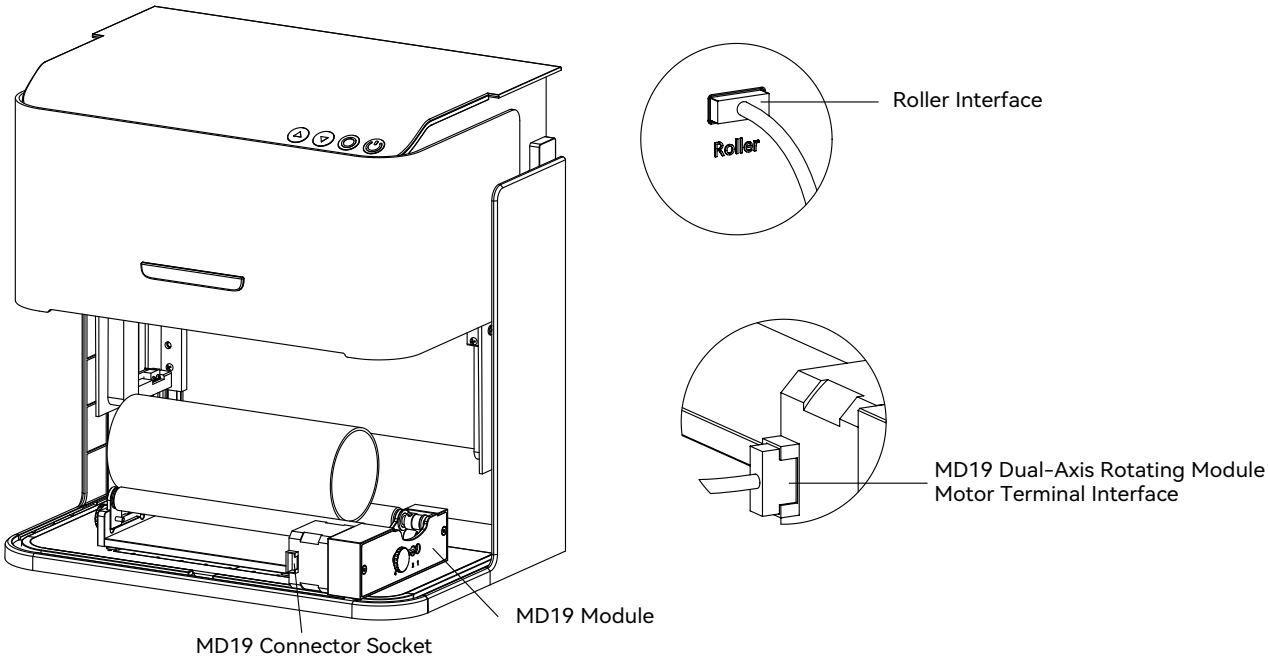

【 Functional description 】

Connect the telescopic exhaust pipe to the air purifier:

a. Connect the pipe to the air purifier

b. Turn on the air purifier and use it.

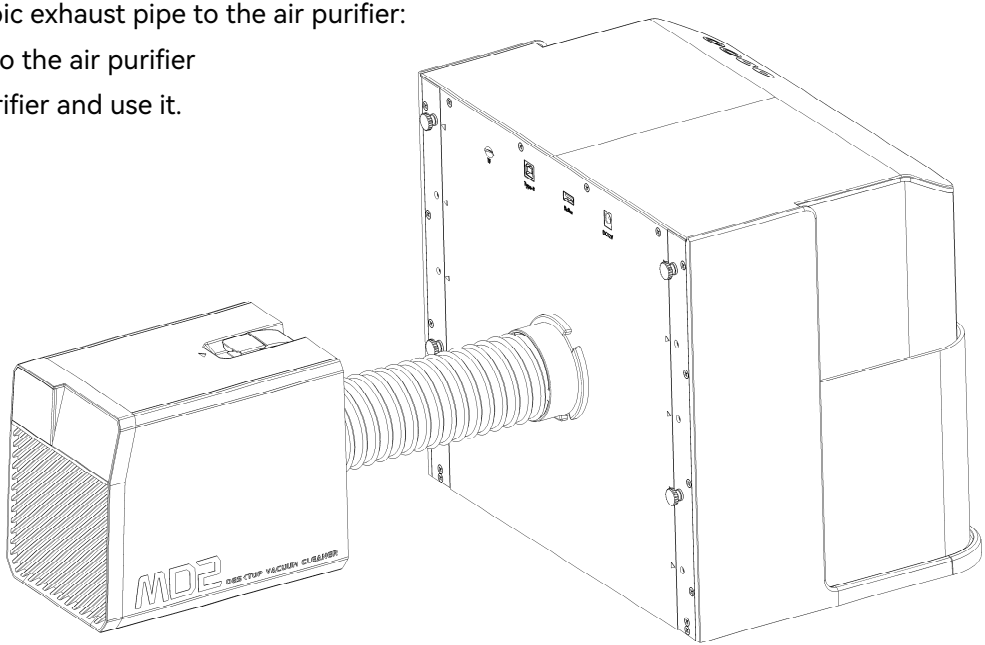

04 REGULAR PRODUCT MAINTENANCE

To keep your Z8 operating at peak performance and minimize wear, perform the following maintenance tasks regularly:

Clean the laser module lens: Over time, particles accumulate on the outer lens of the laser module, reducing its power output and causing the lens to overheat. If you notice a decline in cutting efficiency for materials that previously cut well, it may be time to clean the lens. Gently wipe the lens using a cotton swab or a cloth dampened with alcohol.

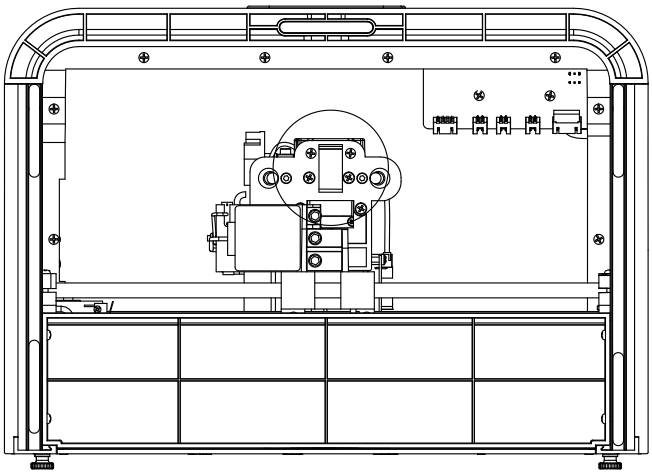

Wipe the window lens with alcohol

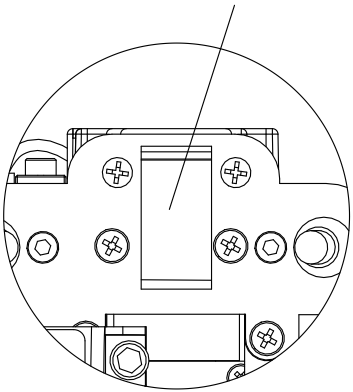

05 SUPPORTED SOFTWARE OVERVIEW

Software	Definition	Compatible Computer Systems	Moblle Support	Payment / Free	Open Source	Driver Required
LightBurn	A comprehensive, paid software used for laser engraving, designed for precision and ease of use.	Windows macOS Linux	NO	Paid (withtrial)	NO	YES
CutLabX	A software suite for laser cutting and engraving, focusing on ease of use and compatibility with a range of devices.	Windows macOS iOS Android	YES	Free	NO	YES

06 DRIVER INSTALLATION

Download Path of Driver

TF Card:

STEP 1

Z8_04_Windows

Z8_05_MAC

STEP 2

01_CH340 driver(Necessary)

For Windows:

CH34x_Install_Windows_v3_4.EXE

A. Double-click the downloaded CH34x_Install_Windows_v3_4.EXE file.
B. Click the "install" button and wait for the installation to complete.
C. Once the installation is successful, a prompt window will appear. click "OK" to finish theinstallation.

Manual Installation (for cases where automatic installation fails)

A. Open "Device Manager" (right-click on "This PC" -> "Manage" -> "Device Manager")
B. Locatethe "Unknown Device" or"USB-SERIAL CH340" with a yellow exclamation mark.
C. Right-click on the device and select "Update Driver."
D. Choose "Browse my computer for drivers," then specifythe folderpath where the driverfiles are located.
E. Click "Next" to complete the installation.

For Mac:

1. Double click the file in TF card or the file you download:

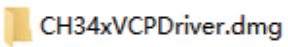

2. Click Next

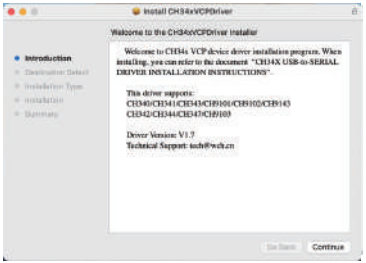

Tips:

If the installation fails, check the system security settings:

1.Open "System Preferences" → "Security & Privacy" → "General"

2.Under "Allow apps downloaded from," select "App Store and identified developers.

3.Retry the installation.

3. You can change the position or install directly, click Install.

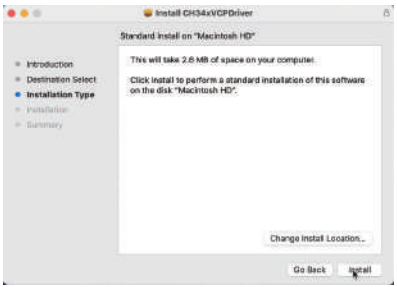

4. Just wait until you seethe bellow

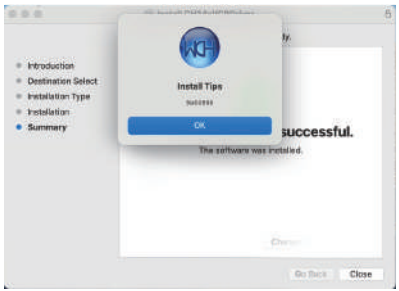

LightBurn

TF Card:

STEP 1 → Z8_04_Windows

STEP 2 → 03_Lightburn

STEP 3 → LightBurn-installation package-32Bit-v1.5.06.exe
LightBurn-installation package-64Bit-v1.5.06.exe

LightBurn

Installation wizard

A. Select Language: Afterthe installer launches, choose your preferred language

B. Accept LicenseAgreement: Read and accept the LightBurn license agreement.

C. Choose Installation Location: The default installation path is C:\Program Files lightBurn. Youcan also click "Browse" toselect a differentlocation.

D. Create Desktop shortcut: check the "Create Desktop shortcut" option to quicklylaunchlightBurn.

E. Start Installation: Click the "install" button and wait for the installation to complete.

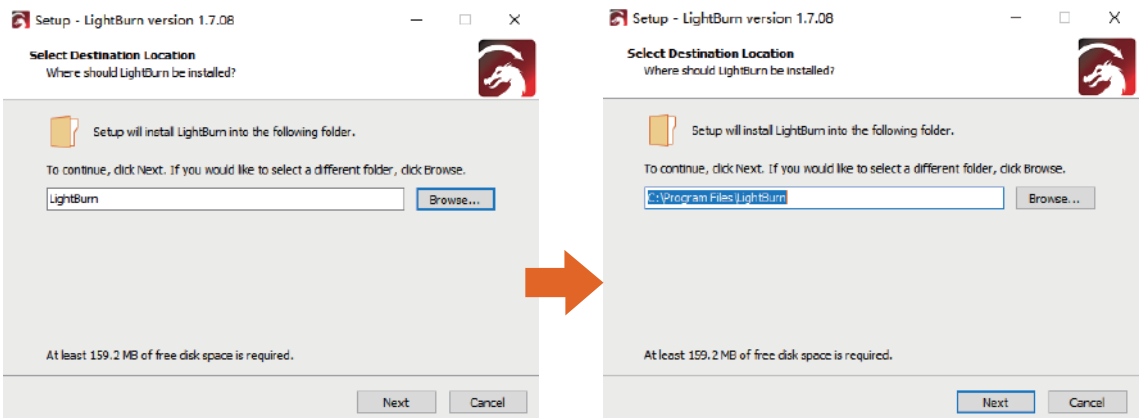

LightBurn

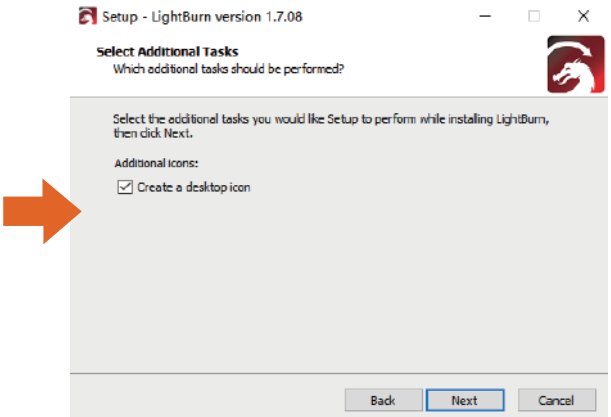

Complete installation : Once the installation is finished, clickthe "Finish" button to exit the installation wizard.

A. If you checked "Launch LightBur," the software will start automatically.

B. If you have purchased a LightBurn license, open the software,click"Help" → "Enter LicenseKey", and enter your license key.

C. If you are a trial user, you can start using the trial version directly(valid for 30 days).

CutLabX

Path 1

Website: https://www.cutlabx.com/

Or you can download by Apple Store or Google Store as well.

Path 2

TF Card:

STEP 1

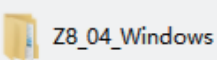

STEP 2

STEP 3

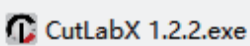

LightBurn

LightBurn installation package .V1.5.06.dmg

1. Drag the LightBurn icon to the "Applications" folder to complete the installation

2. Open the "Applications" folder, locate LightBurn, and double-click to run it.

CutLabX

You can search and install it in Apple Store.

Scan the QR code below or search in the app store or Goole Play to download the CutlabX app to your phone.

For iPhone

For Google

Important note

For mobile APP, it is recommended to use Cutlabx software to connect to the machine.

09 PC CONNECTION

Connect the device powersupply as shown in the figure

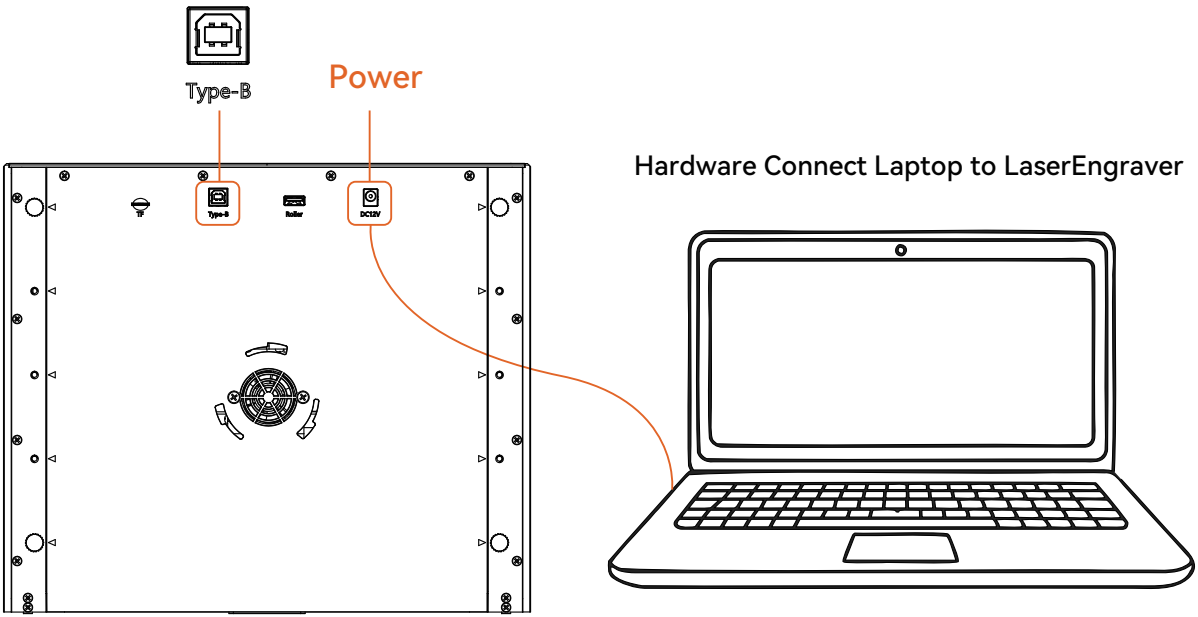

For LightBurn

LightBurn

1. Launch LightBurn (using LightBurn as an example here)

On Windows:

Double-click the lightBurn short cut on the desktop, or find LightBurn in the "start" menu and click to run it.

On macOS:

Open the "Applications" folder, locate lightBurn and double-click to run it.

2. If you are first time to use, please choose "start your free trial" here, get free for 1 month. Then click "OK"

3. Ensure the laser engraver is connected to the computer via USB.

For LightBurn

LightBurn

4.Add Device

A. Click "Devices" at the bottom right of the software to add a laser:

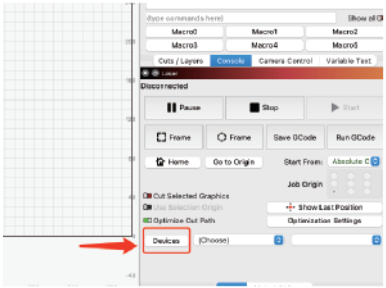

B. Then click "Create Manually":

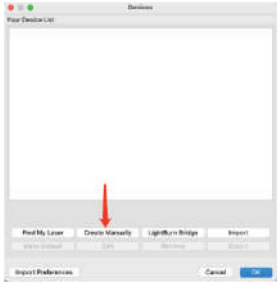

C. Then pick your laseror controller from this list: Here click the "GRBL"

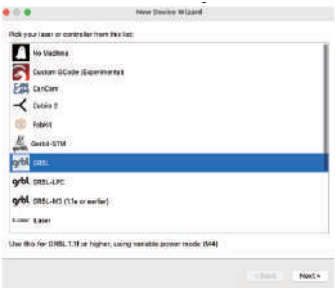

D. Then choose the way of connection select GRBL as usual

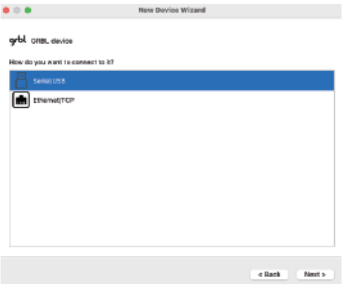

For LightBurn

LightBurn

4.Add Device

E. Name your laser and add the dimensions of the work are. Z8 series working area is 200x100mm/180x100mm

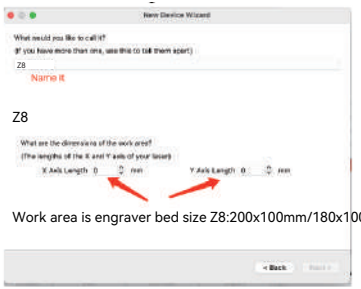

F. Choose the Front Left

G. Finish adding devices and your will find the laser you created and click “OK”

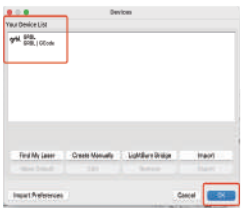

H. In the "Port"dropdown menu, select the COM port corresponding to your device (e.g., COM3 or /dev/cu .wchusbserial).

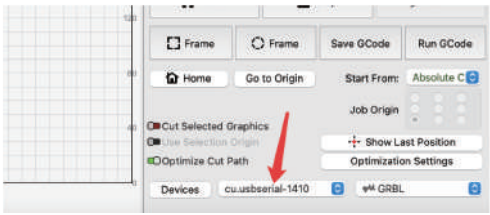

For LightBurn

LightBurn

5.Set Engraving Angle

Before engraving the device, click “Cutting Layer” → “00”, then set the scanning angle to 90°.

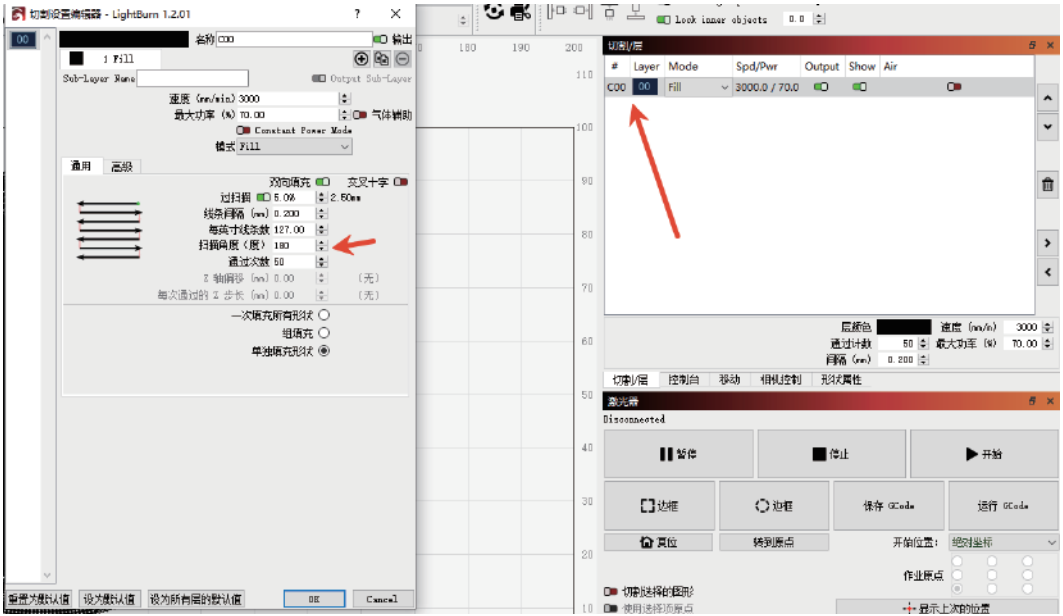

For LightBurn

6.Change Language

LightBurn

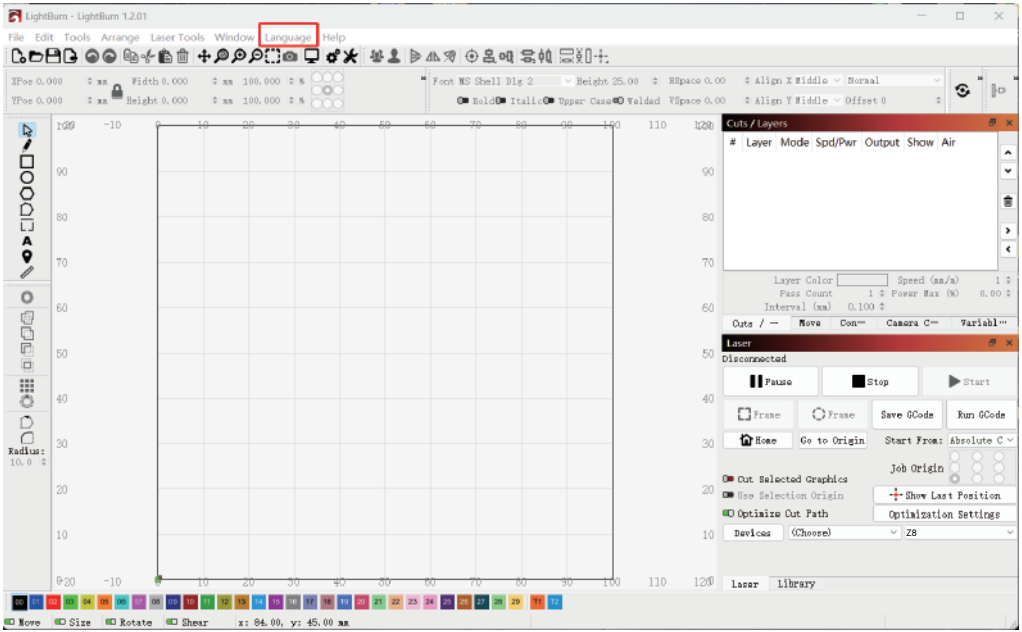

For LightBurn

LightBurn

7. Engraving setting Introduction

Speed	The speed at which the laser moves. We recommend using mm/m, if your machine shows mm/s, you can change it in <Edit>-<Settings>
Pass Count	The number of laser passes.
Power Max/Min	The laser power, it is recommended not to exceed 90%.
Interval	The interval of laser lines, the smaller the interval, the deeper the engraving effect.When cutting material, change the mode in <Edit><Convert to cut(debug)

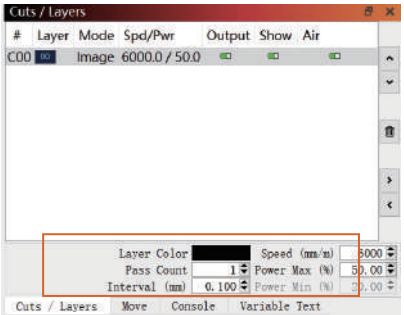

Set parameters

8. Button Description

Pause	Pause laser processing
Stop	Stop laser processing
Start	Initiate laser output
Square Frame	Scan a frame with a square path
Circular Frame	Scan a frame with a circular path
Save GCode	Save the current task as a GCode project file
Run GCode	Run GCode file
Home	Reset to the origin set by <Device Settings>
Go to origin	Go to the origin set by <Start from>

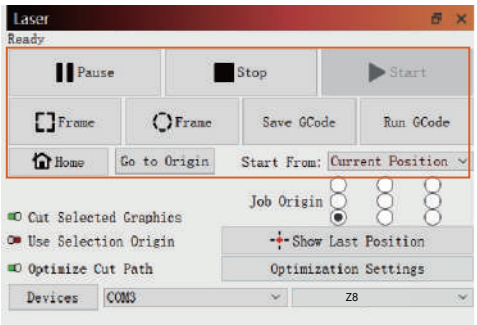

Bedientaste

For LightBurn

LightBurn

9. Devices Settings

Double-click "Speed/Power" to adjust more parameters of the task, including mode and kerf offset, etc.

In <Edit> -<Device Settings> , you can set more details of the machine. please refer to the settings of our pictures.

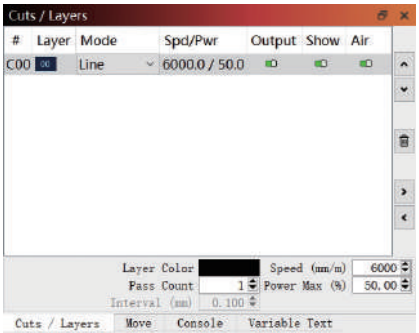

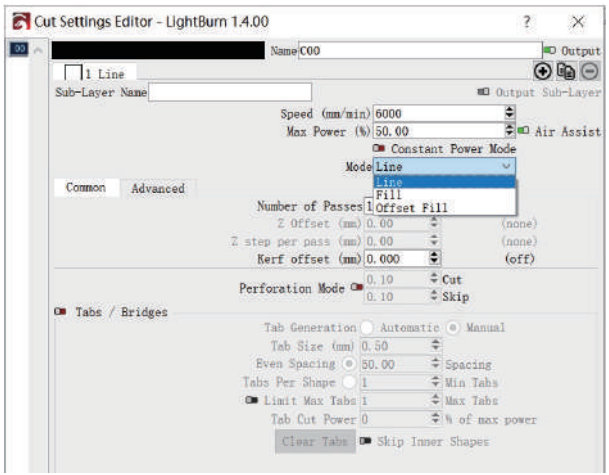

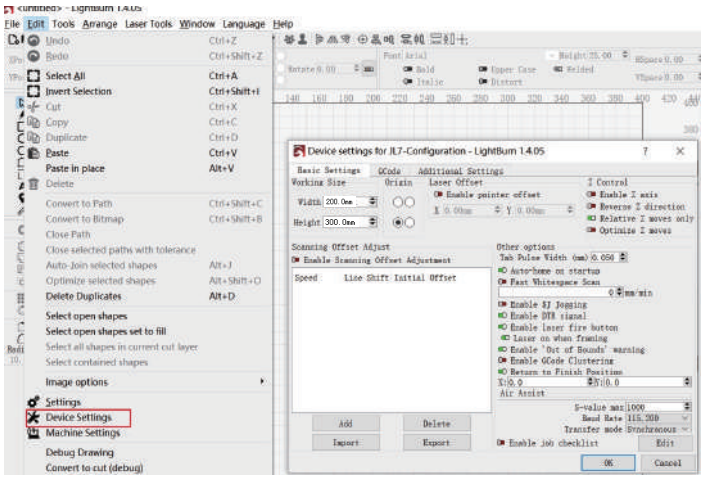

For LightBurn

LightBurn

10. Setting the initial position of the laser head

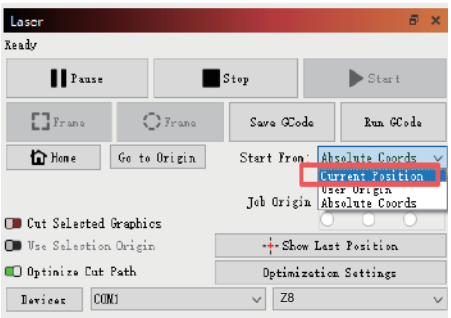

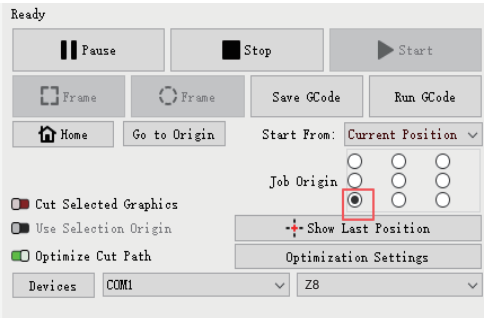

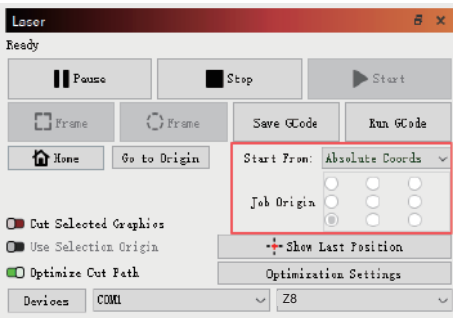

For LightBurn

LightBurn

Tips:

1. How to Confirm the Port

   Windows: check under the "Ports" section in "Device Manager."

   macOS: Enter ls /dev/cu.* in the Terminal to view the portname.

2. Common Issues and Solutions

Device Port Not showing:

   Replug the USB cable and restart the device and computer

   Check ifthe CH340 driver is installed (a common issue for Windows users)

3. Connection Failed (Error):

   Ensure the baud rate matches the device.

   Close other software that may be occupying the serial port (e.g., Arduino IDE)

4. Device Not Responding:

   Check if the power supply is normal and if the motor cables are loose.

   Ensure the working area size does not exceed the physical limits.

For CutLabX

CutLabX

1. Steps to connect the computer to the machine via USB

*Note: Install the driver according to your computer system (see driver installation instructions).

01 Turn on the machine and turn it on

02 Connect the Z8 machine with a USB cable

03 Open CutLabX software and enter the creation page

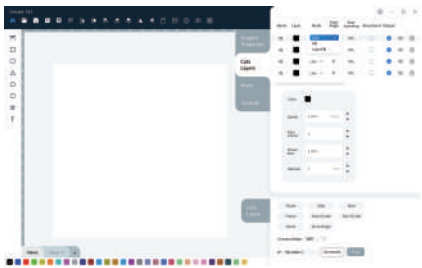

04 Automatically identify the machine and connect
(If it does not connect automatically, you may need to try another COM)

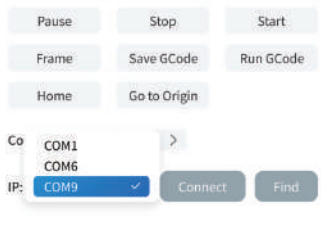

(Tip: When the machine is connected to a MAC, you must select the name that begins with: W.ch.....)

10 MOBILE CONNECTION

For CutLabX Only CutLabX support

CutLabX

1. Connect Phone to Laser Machine

A. Turn on the power of the machine make sure the indicator light is constantly on, otherwise there is no wifi signal.

B. Turn on the WLAN on the mobile phone, find the WIFI Signal named “Z8” and the password is 12345678 .

C. After the WIFI connection is successful, open CutLabX, click the link mark in the upper right corner, then enter 192.168.0.1 in the IP address, and click Connect to complete the connection.

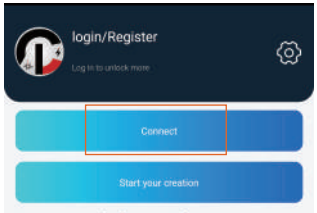

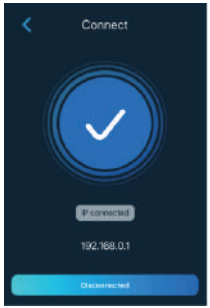

For CutLabX

2. Introduction of the interface

CutLabX

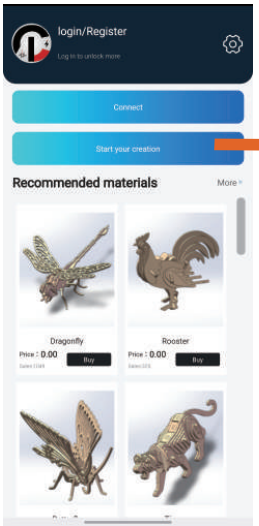

Create hand-drawn projects, import phone photo albums.

For CutLabX

CutLabX

3. Engraving setting

Click "'Start your Creation" on the home page, and click "Image Processing" after importing pictures or drawing text. Then select the engraving style (Monochrome, Jitter, Contour, Grayscale). You can adjust parameters according to the effect of the preview window.

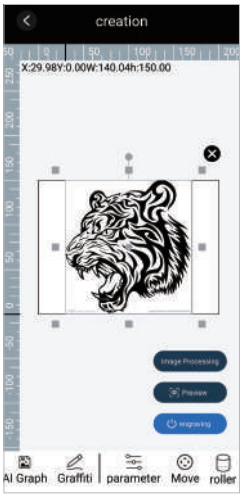

Note:

Please make sure that the memory card has been inserted into the controller, the mobile phone and controller have been connected to the same WiFi, and the CutLabX APP has entered the correct IP address.

10 MOBILE CONNECTION

CutLabX

Tip: Steps to connect the phone to the machine: Home network

01

Turn on the device and open the computer s oftware

02

Connect the machine to the computer with a USB cable (use the USB port to connect to the computer and the Type-B port to connect to the machine)

03

Open the CutLabX computer software and enter the cre-ation interface

04

The computer software automatically connects after recognizing the machine
(If it does not connect automatically, try a different COM)

05

Click the "WiFi Settings" button. Click to enter the WIFI name, home network password, and restart the machine

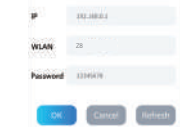

(Note: The WiFi name must be existing, and the password cannot contain complex symbols, only numbers + letters)

06

Turn on the WIFI on your phone, find the home network WiFi name, and enter your password

07

After the WIFI connec-tion is successful, open the CutLabX APP and click the link mark in the upper right corner

08

"Click to get the address"

09

Click your IP address to get it, and click "Con-nect"

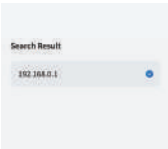

10

The connected IP is displayed, indicating that the connection is successful

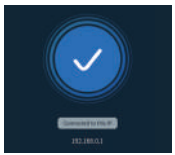

(Tip: To use the WiFi mode, the machine and the phone must be in the same WiFi network)

11 FAQ

FAQ	Solution
Why does Lightburn show a "Busy" status but the machine is not moving?	Most likely, the device is not actually connected yet. Please ensure that the controller is connected and the communication port is selected in the laser window in the lower right corner of the software.
Why do the corners of engraved images appear burnt or dark?	If the minimum power setting is too high, the laser power may not decrease sufficiently when decelerating at corners, resulting in burn marks at corners or at the start and end points of the design. Please lower the minimum power setting.
Why is the back of the wood board severely charred after cutting?	Make sure the wood is elevated. If placed directly on a flat steel plate, the gap between the wood and the plate will be too small. When the laser penetrates the wood, the plate cannot absorb all the energy, and residual reflected laser light will burn the wood. Use a honeycomb laser bed or elevate the wood to maintain a gap between the cutting position and the wood.

11 FAQ

FAQ		Solution
How to improve engraving quality?	The image is not clear or the image processing is not ideal	Please confirm whether the imported image is clear or the image processing is ideal.
	The engraving machine is not level and is tilted	Please check whether the engraving machine is level
	Dust or impurities are attached to the laser lens	Check the laser lens for dust or impurities
How to increase the preview frame speed?		For LaserGRBL, right-click "Framing" at the bottom, left-click the "Edit" button, and in the pop-up parameter interface, find the value starting with F (e.g., F1000), change it to F6000, and click Save. LightBurn users, click to find and import the LightBurn device configuration file from your TF card. The file name is Z8 LightBurn Configuration.lbdev