PRORUN®

SERVICE MANUAL

MODEL: PBLT1342M

LAWN TRACTOR

540cc, 13 HP, 42-inch, 6 Speed

GAS

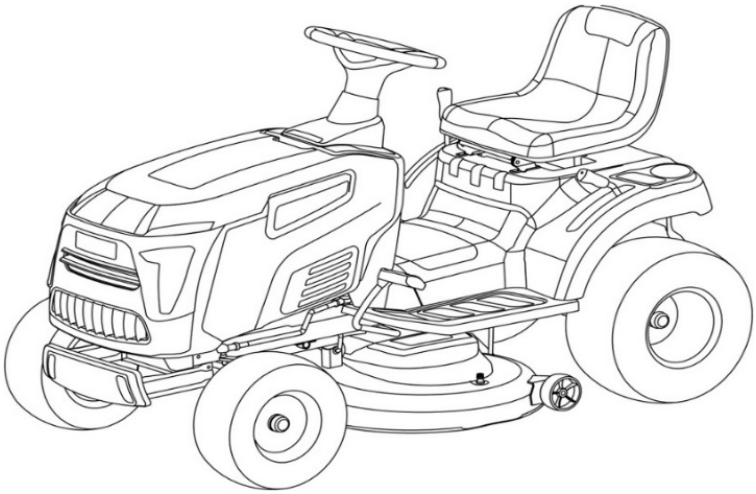

Everything PRORUN

⚠ **IMPORTANT – READ CAREFULLY BEFORE USE.**

⚠ **IMPORTANT SAFETY INSTRUCTIONS – SAVE THESE INSTRUCTIONS**

WARNING: To reduce the risk of injury, the user must read and understand the User manual before using this product. Keep these instructions for future reference.

Please let us know what you think. To leave a comment and see our complete product line, Visit:

PRORUNTOOLS.COM ★★★★★

1-844-905-0882, info@proruntech.com

Version: A – Issue Date: 3/3/2026

10130 Perimeter Pkwy Ste 140, Charlotte, NC 28216

TABLE OF CONTENTS

I.	HOW TO USE MANUAL	4
1.	RULES AND PROCEDURES FOR SERVICE CENTERS	8
1.1	Identification and procedures	8
2.	GENERAL REGULATIONS	10
2.1	Safety regulations	10
2.2	Tools	12
2.3	Lifting and lower accessibility	13
2.4	Practical hints	15
3.	MAINTENANCE	17
3.1	Criteria for maintenance	17
3.2	Troubleshooting and remedies	19
4.	ADJUSTING AND TUNING	24
4.1	Adjusting the engagement and checking the blade brake	24
4.2	Brake adjustment	25
4.3	Drive belt adjustment	27
4.4	Drive pedal adjustment (MP 84/98 Hy)	27
4.5	Aligning the cutting deck	29
4.6	Adjusting the steering play	32
4.7	Steering geometry adjustment	34
4.8	Checking blades alignment	36
4.9	Removing, sharpening, and balancing the blades	38
5.	REMOVAL OF EXTERNAL AND BALANCING PARTS AND MAIN ASSEMBLIES	41
5.1	Removal of front hood	41
5.2	Removal of the side guards (if provided)	42
5.3	Removal of the wheel cover	43
5.4	Removal of the dashboard	45
5.5	Removal of the engine	47
5.6	Removal of the rear axle (Peerless MST 205-535 E)	51
5.6a	Removal of the rear axle (Hydro-Gear T2-ADBF-2X3C-1RX1)	55
5.7	Removal of the cutting deck	59
6.	REPAIRS	61
6.1	Replacement of tires and wheels	61
6.2	Replacement of front wheel bearings	63
6.3	Dismantling of the steering components	64
6.4	Replacement of the drive belt	66
6.5	Replacing the small wheels with the drive belt	69
6.6	Replacement of the blades control belt	71
6.7	Replacement of the supports and shafts of the blades	73
6.8	Replacing the accelerator and adjusting the carburetor	79
6.9	Replacement of the brake pads and disc (TTM 86/92/102)	81

7. ELECTRICAL SYSTEM **84**
7.1 Troubleshooting of the electrical system **84**
7.2 Cutting in of the safety devices **88**
7.3 Recharge circuit check **89**
7.4 Maintenance of the sealed battery **90**
7.5 Fitting safety microswitches **91**
7.6 Electrical diagrams **92**
8. TECHNICAL SPECIFICATIONS **94**
8.1 Tightening torques and adjustments summary **94**
8.2 Belts assembly **96**

I. HOW TO USE THE MANUAL

GENERAL INFORMATION

The purpose of this manual is to assist Service Centers with servicing, disassembling, and repairing the versions of the machines:

- Mechanical driven (TTM86/98/108S).
- Hydrostatic driven (TM86/98/108SH).

The manual has left out the simplest and quickest operations that a good mechanic can handle, while focusing more on specific aspects, with tips and advice on the best servicing procedures.

Please take time to read through this manual to acquire a basic understanding of the machine, which is necessary for working rationally without making errors
or wasting time.

All problems related to the use of the machine are fully covered in the user manual.

STRUCTURE OF THE MANUAL

The manual is divided into sections and chapters. Each page of this manual states the following information:

A) Machines or a series of machines to which the con- tents of the chapter are applicable.

B) Identification and number of the page based on the following criteria:
- The first field indicates the section and chapter.
- The second field indicates the revision index.
- The third field indicates the chapter validity start date, i.e., the year of manufacture of the machine.
- The fourth field indicates the page number and total number of pages dedicated to the subject.

C) Chapter title.

D) General information, references to other chapters in the manual, technical information related to the topic, and buttons with links to the machine operating units map can be found in the left column on each initial page.

SECTIONS OF THE MANUAL

The content of the manual is divided into sections that correspond to the various subjects and the different types of service.

1. Rules and procedures for Service Centers

This chapter covers all the main aspects of the relationship between the manufacturer and the service centers.

A close collaboration between the manufacturer and the service centers is crucial for solving problems in the most effective way, as well as maintaining an image of efficiency and reliability. Compliance with these brief and simple guide- lines will facilitate this task and prevent general misunderstandings and waste both the manufacturer and the service center.

2. General regulations

This chapter covers the main aspects of a servicing procedure and the general rules for guaranteeing a successful service which protects the environment and respects the safety of both the serviceman and the user of the apparatus.

3. Maintenance

This chapter covers the main aspects of a service procedure.
A specific chapter is dedicated to a quick trouble- shooting guide on the most frequent questions and the chapter references providing information on the interventions required to resolve the same.

4. Adjustments and tuning

His chapter deals with the adjustments to be made to remedy the more frequent performance failures, which are usually resolved by quick checks and tuning.

5. Removal of external parts and main assemblies

For doing more difficult jobs, greater accessibility may be required. This can be done by taking the unit concerned off and working on the bench, or by removing the cover or other external parts.
Whether or not this will be useful is at the discretion of the mechanic's experience.

6. Repairs

This chapter deals with more complex work connected with the replacement or repair of malfunctioning or worn parts.
The descriptions must follow a logical sequence and can include operations not specifically connected to a particular type of repair.
In this case, careful reading of the entire procedure can help you avoid all those operations not connected with the case in hand without, however, over- looking anything that may be necessary.

7. Electrical system

This chapter deals with the problems and checks connected with the electrical system.
All work can be done using a tester without having to use special equipment.
The electrical diagrams can be useful to you for understanding how the system functions and to facilitate the pinpointing of any problems.

8. Technical specifications

This chapter summarizes all the main information regarding the machine.

FUNCTIONAL UNITS MAP

The map is a search tool that provides instant access to all information concerning machine operational units or elements.

Identification is simplified using icons resembling the various units, each of which is linked to a table of contents that lists all related topics.

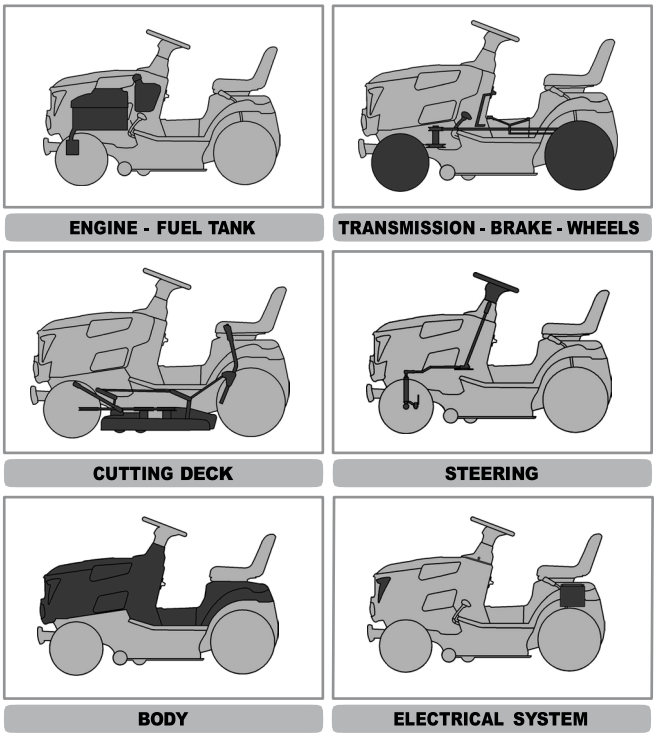

SYMBOLS

In the manual, some symbols are present. They are used to drawing the attention of the operator, reminding him to perform the interventions with the necessary attention and caution.

Indicates operations that should be carried out with utmost care to avoid impairing the functionality and safety of the machine.

Indicates operations that should be carried out with utmost care to avoid injury to operators.

Highlight all those operations that require different working methods depending on the type of machine, subsequent modifications, and the fitting accessories.

Indicates cross-reference to other parts of the manual, followed by the number of the relevant chapter, paragraph, or sub-paragraph.

TERMINOLOGY AND ABBREVIATIONS

Some paragraphs are preceded by a definition that highlights their importance:

NOTE: General reference for the correct maintenance execution and methods.

IMPORTANT! Specific procedures or information are necessary to avoid damage to the machine or equipment.

WARNING! Non-observance will result in the risk of injury to oneself or others.

DANGER! Non-observance will result in the risk of serious injury or death to oneself or others.

Whenever reference is made to a position on the machine "front", "back", "left", or "right" side, this refers to the positions of the seated operator.

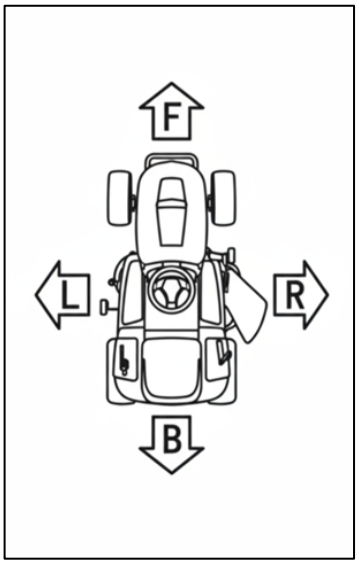

The following abbreviations are used in this manual.

Dx / Sx	Right/ Left
Min / Max	Minimum / Maximum
Chap.	Chapter
PTO	Power Take Off
HST	Hydrostatic Transmission

1. RULES AND PROCEDURES FOR SERVICE CENTERS

1.1 Identification and procedures

GENERAL INFORMATION

This chapter covers all the main aspects of the relationship between the Manufacturer and the Service Centers.

A close collaboration between the Manufacturer and the Service Centers is crucial for solving problems in the most effective way, as well as maintaining an image of efficiency and reliability. Compliance with these brief and simple guide- lines will facilitate this task and prevent general misunderstandings and waste both the manufacturer and the service center.

RELATED TOPICS

A. IDENTIFICATION

1. Machine

Each machine has a label attached (1) under the driver's seat, which shows the technical specifications, the model, and the serial number.

The model and serial number must be shown on each repair sheet when requests are made under guarantee and are indispensable for spare part orders.

1. Name and address of manufacturer
2. Designation of the machine
3. Type of machine
4. Cutting width
5. Mass of machine
6. Nominal power of the engine
7. Serial Number
8. Year of Manufacture
9. Acoustic power level according to Directive 2000/14/CE
10. Conformity mark according to Directive 2006/42/EC

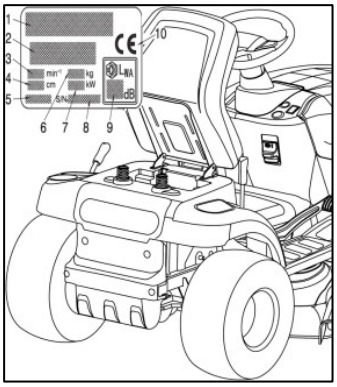

2. Transmission

The transmission unit (both mechanical and hydrostatic) is made up of an engine block including the rear axle. This unit is made by another manufacturer to our precise technical specifications, which differentiate it from similar items by this same Manufacturer.

The serial number on the label (2) clearly identifies the product and its specifications. This

The number must always be quoted when requesting spare parts or any information from the Manufacturer.

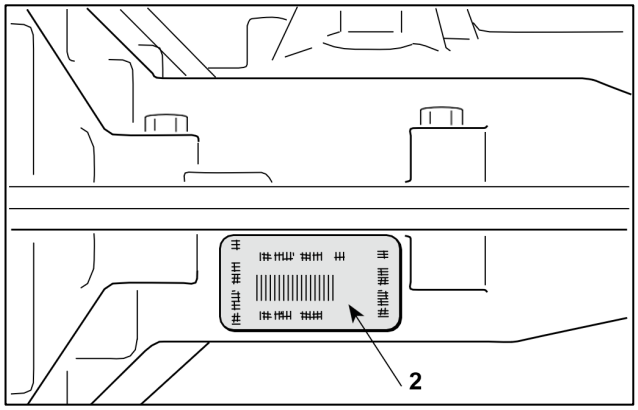

3. Engine

The engine is made to precise technical specifications which differentiate it from similar items by the same Manufacturer.

The serial number on the label clearly identifies the product and its specifications. This number must always be quoted when requesting spare parts or any information from the Manufacturer.

B. GUARANTEE VALIDITY

The guarantee is supplied under the terms and the limits of the contractual relations in being. As far as the engine and the transmission unit are concerned, the conditions given by their respective manufacturers apply.

C. SERVICE REPAIRS AFTER GUARANTEE PERIOD

The Service Center must make out a report containing the machine's serial number, a summary of the problem, the repairs carried out, and any spare parts used for each repair done on the machine.

A copy of this report must be retained to be made available to the Manufacturer, together with the parts, in case of any subsequent disputes with Customers.

D. FAULT NOTIFICATION

The Manufacturer welcomes any notifications of faults that recur with frequency. It allows careful inspection of the problem and the implementation of corrective action at the production level.

Similarly, the Manufacturer will notify us of any faults discovered with the machines produced, with recommendations for the most suitable procedures for their remedy.

E. SPARE PARTS REQUESTS

When requesting spare parts, the code number must be given, referring to the exploded charts for the year of manufacture, shown on the identification label.

2. GENERAL REGULATIONS

2.1 SAFETY REGULATIONS

GENERAL INFORMATION

This chapter covers the main aspects of a service procedure and the general rules for guaranteeing a successful service that respects the safety of the machine.

RELATED TOPICS

[2.2] Tools
[7.3] Safety microswitches operation check

A. QUALIFICATION OF OPERATORS

All maintenance, disassembly, and repairs must be carried out by expert mechanics who are familiar with all the accident prevention and safety regulations after reading through the procedures in this manual.

B. SAFETY MEASURES

All the machines are manufactured in accordance with the strict European safety regulations in force.

To maintain these levels of safety in the longer term, the Service Centers should work towards this end by making appropriate checks every time there is the chance to do so.

Particularly, every time there is work done on the machine, the Service Center should:

1. **Check:**
   - That safety microswitches are working correctly.
   - That the casings and protection cover have not been removed.
   - That the labels with instructions or provisions have not been removed or have become illegible (these form an integral part of the safety system).
2. **They Should Also:**
   - Restore proper working order and any safety devices that have been manipulated or removed.
   - Reattach inefficient, damaged, or missing casings and protection covers.
   - Replace illegible labels.
   - Does not endorse any repair or modification on the machine or the engine that results in a change in performance or use that is incorrect or different from the purpose for which it was designed and approved.
   - Warn the customer that the failure to comply with the above points results in the automatic annulment of the guarantee and the manufacturer declines all responsibility, as also shown in the instruction booklet.

C. PRECAUTIONS DURING SERVICING

The operations described in this manual do not entail particularly hazardous situations besides the normal hazards related to mechanical operations and which can be avoided by taking the necessary care and attention normally required for this type of work.

As well as following the usual accident prevention regulations that apply to most repair shops, we recommend you:

- Taking out the ignition key before beginning any repair work.
- Protect hands with suitable working gloves, especially when working near the cutting unit.
- Check that you do not cause accidental petrol leaks or other losses.
- Do not smoke when working on the tank or when handling petrol.
- Do not inhale oil or petrol fumes.
- Clean up all traces of spilled petrol immediately.
- Test the engine in a well-ventilated environment or where there are adequate exhaust fume extraction systems.
- Do not pollute the environment with oil, petrol, or other waste, and dispose of all waste in accordance with the laws in force.
- Ensure that other people cannot accidentally carry out actions that may physically endanger those working on the machine.

D. NECESSARY EQUIPMENT

All the operations can be carried out with the tools normally used in a good garage.
Some operations require special equipment and tools.

2.2 TOOLS

GENERAL INFORMATION

This chapter covers the main aspects of a service procedure and the general rules for guaranteeing a successful service that respects the safety of the machine.

RELATED TOPICS

All work can be carried out using the tools normally available from a good workshop. However, it is advisable to have a set of special tools.

These tools are to be used whenever they are given in the text.

1. Blocks H = 26 mm for adjusting the cutting deck
2. Blocks H = 32 mm for adjusting the cutting deck
3. Bush for assembly of blade bearings
4. Stopper for assembly of wheel bearings
5. Pulley extractor

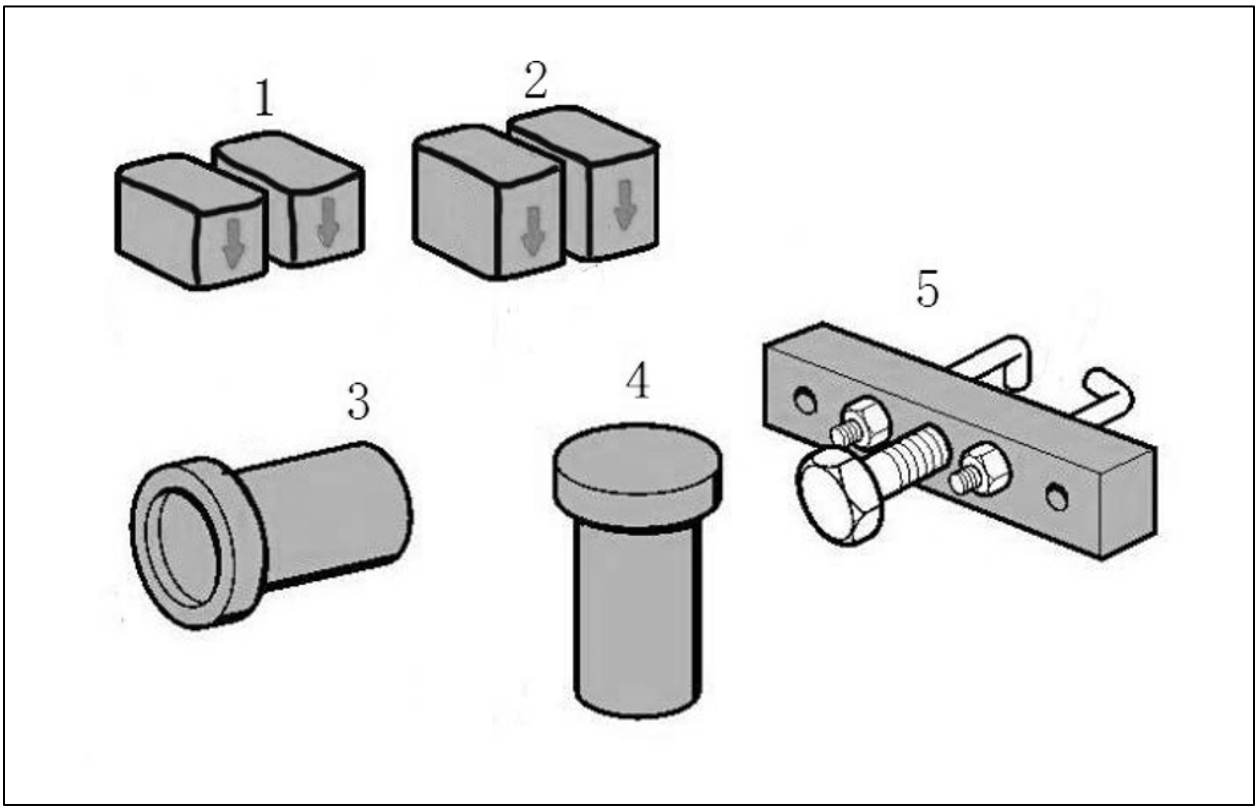

2.3 LIFTING AND LOWER ACCESSIBILITY

GENERAL INFORMATION

This chapter covers the main aspects of a service procedure and the general rules for guaranteeing a successful service that respects the safety of the machine.

RELATED TOPICS

DANGER! The machine must never be lifted using a hoist or other lifting equipment that uses cables.

A. FRONT

Once the parking brake has been engaged, the machine can be lifted using a jack, which pushes on the underside of the frame, placing a wood block (1) between the base of the jack and the frame, and checking to see that the free movement of the front spring equalizer has not been obstructed.

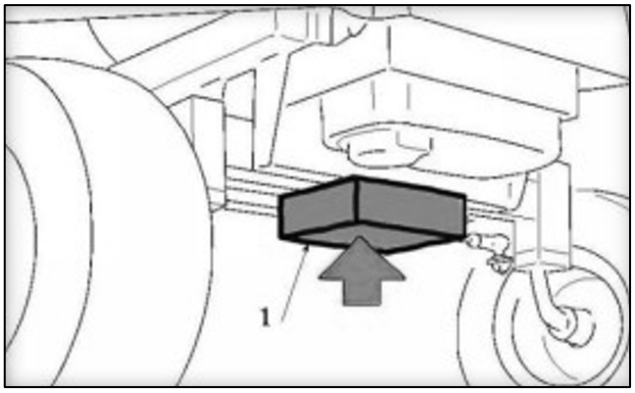

B. REAR

Position two suitably sized wedges (3) in front of the front wheels to prevent all uncontrolled movement of the machine.

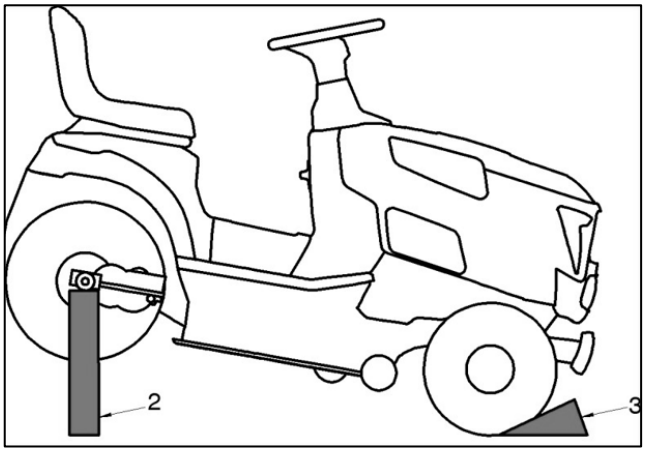

Position a jack under the transmission unit and lift it enough to place two suitable blocks (2) beneath the rear axle.

Release the jack and make sure the machine is stable before starting any work.

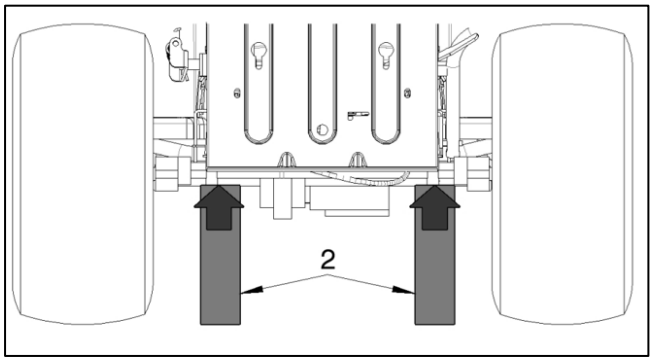

2.4 PRACTICAL HINTS

GENERAL INFORMATION

This chapter covers the main aspects of a service procedure and the general rules for guaranteeing a successful service that respects the safety of the machine.

RELATED TOPICS

A. FITTING SNAP RINGS

One side of the “Benzing” snap rings (1) has a rounded- ed edge and the other a sharp edge.

For maximum grip, the rounded part needs to be facing towards the element to be held (2), with the sharp edges on the outside.

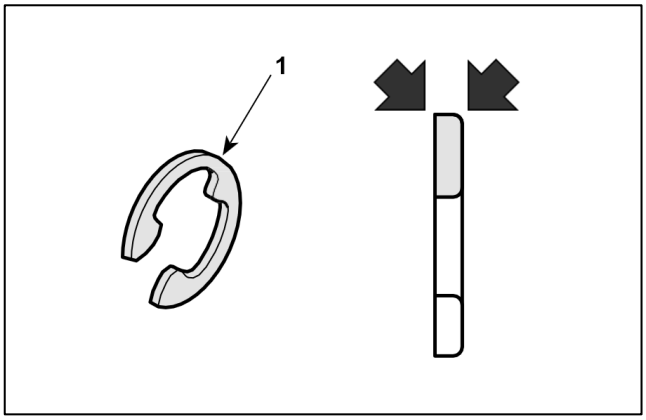

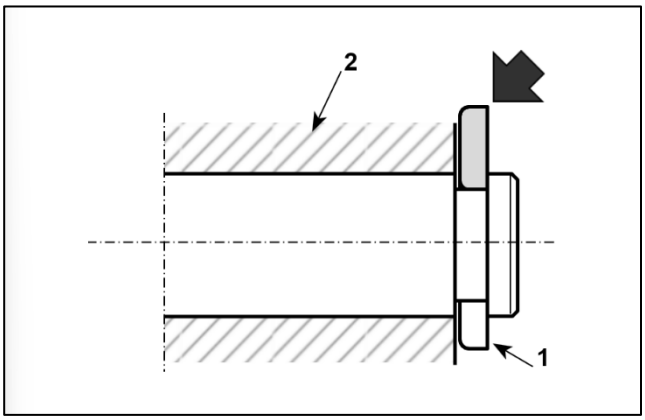

B. JOINT PIVOT PINS

There are a large number of pivoted pins, usually connected to rods, that need to be able to move in various directions.

A typical situation has the pin (3) fixed by a self-locking nut (4) with two anti-friction washers (5) in between the pin (3) and the support element, and between this and the nut (4).

Since these are joints, the nut must never be tightened completely but only so much that it can ensure the free rotational movement of the pin on its axis without, however, creating excessive

free play, which could result in the parts concerned becoming misaligned and failing to work correctly.

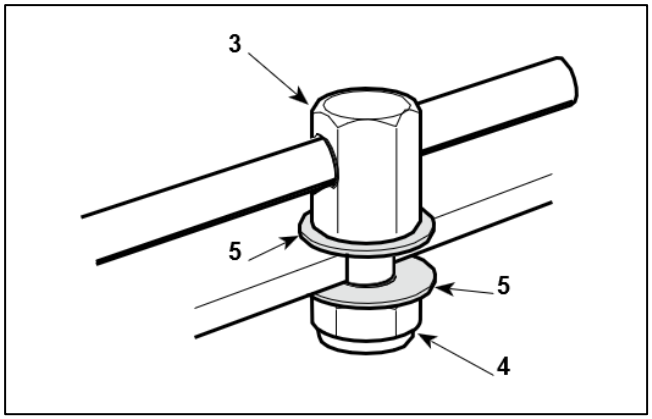

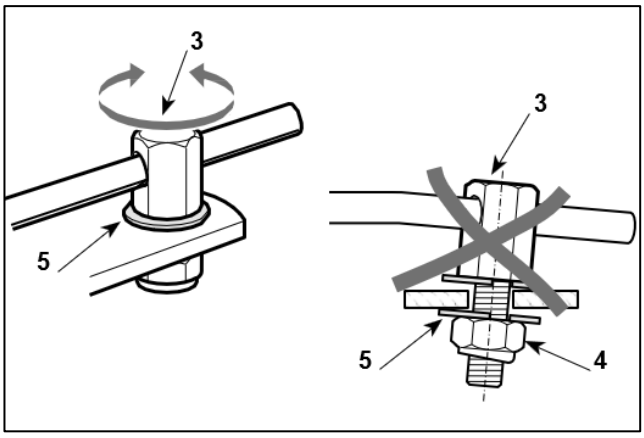

C. CROWN FASTENERS

Some pin ends (6) are secured by crown fasteners
(7). During dismantling, these fasteners are always damaged and lose their hold, so they should never be reused.
On assembly, make sure it is inserted in the right direction and push the fastener (7) onto the pin using a pipe or socket spanner (8) with the right diameter, so that it can be fitted without deforming the fastener “crown”.

IMPORTANT: A deformed fastener should always be replaced.

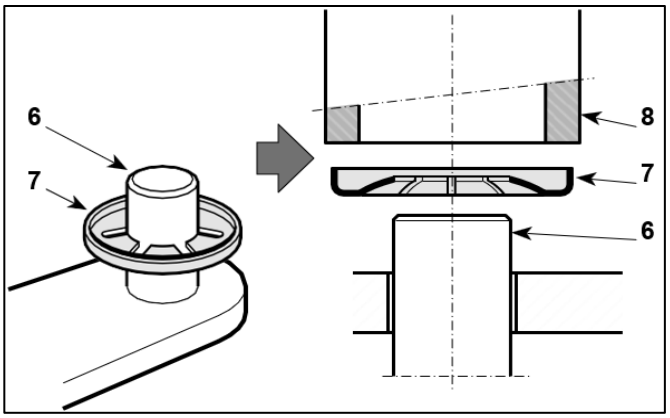

3. MAINTENANCE

3.1 CRITERIA FOR MAINTENANCE

GENERAL INFORMATION

This chapter deals with the intervention criteria for routine maintenance.

RELATED TOPICS

The Instruction Handbook has several operations to be carried out by the Customer for a minimum of basic maintenance, and other operations are not always within its capacity.

For this reason, the Service Center should undertake to keep the machine in perfect working order in two ways:

A. Turn the machine whenever possible.
B. Proposing a regular maintenance program to the Customer to be carried out at prearranged intervals (for example, at the end of the summer or before a long period of inactivity).

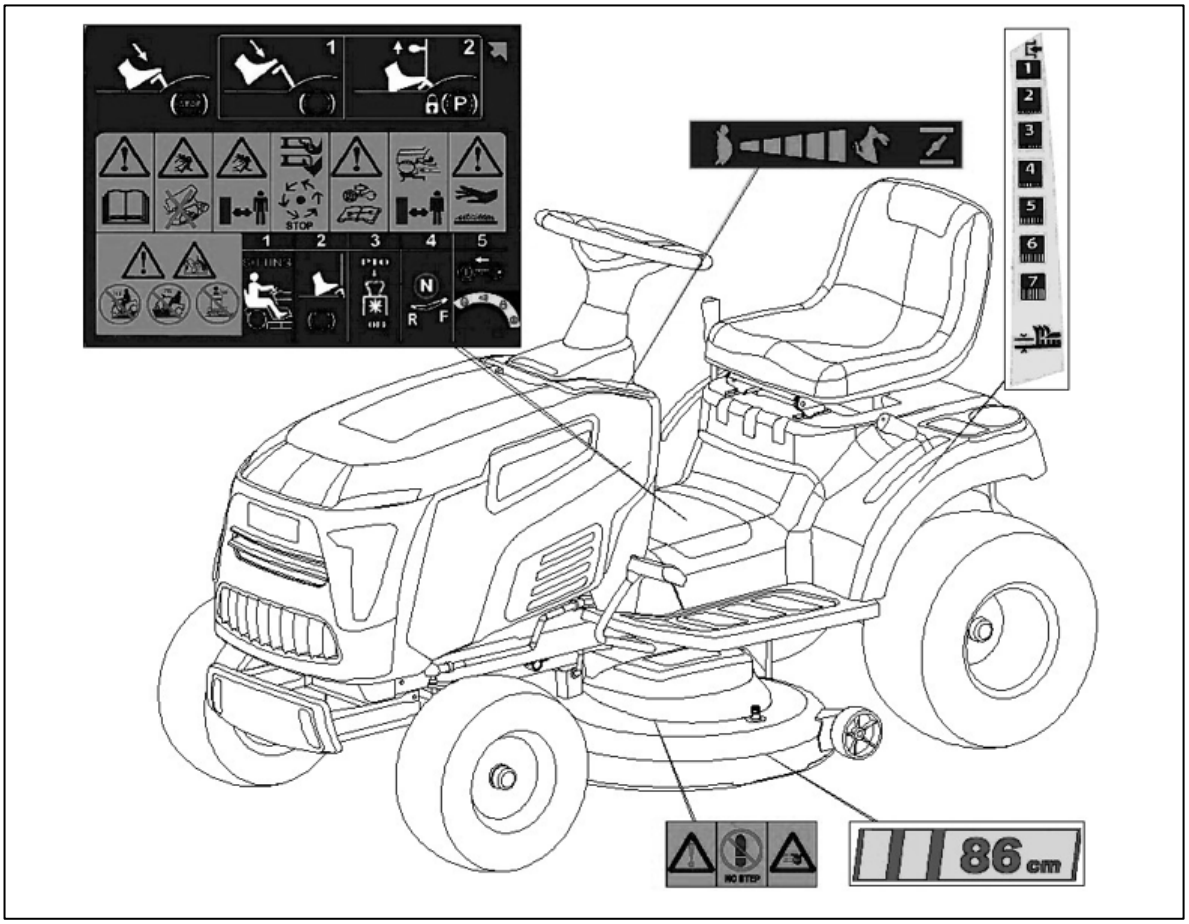

A. OCCASIONAL TUNING

- Check working order of safety devices and renew illegible or missing labels, following the layout below
- Check tire pressures
- Clean air filter
- Check engine oil level
- Check for fuel leaks
- Aligning the cutting deck
- Sharpen and balance the blades and check the condition of the hubs
- Check for wear in the belts
- Check the blade brake engagement
- Grease front wheels, lever joint pins, and bushes
- Check the tightness of engine screws
- Check all those items indicated in the engine manual

B. ROUTINE MAINTENANCE

- All work carried out in section a), plus:
- Check battery charge
- Check the tension of belts
- Adjust driving engagement
- Adjust the brake
- Adjust blade engagement
- Adjust the blades brake
- Check steering allowance
- Check front bearings
- General lubrication
- Clean away grass cuttings and wash the exterior
- Clean and wash the inside cutting deck and the collector channel
- Clean and wash the grass-catcher
- Touching up of any damaged paint

3.2 TROUBLESHOOTING AND REMEDIES

GENERAL INFORMATION

This chapter helps achieve rapid identification and solutions to the most recurrent problems, classified according to the operating unit in question.

RELATED TOPICS

1. ENGINE AND TANK

Problem	Probable cause	Solution
The starter motor does not run.	Low battery	Recharge
	No starter relay contact	Check
	Faulty connector and/or starter motor failure	Check and/or replace
The starter motor runs, but the engine does not start	Blown spark plug electrode	Replace the spark plugs
	Uncertain connections	Check the connectors
	Coil failure	Check and/or replace
	The carburetor solenoid valve does not open	Check
	No fuel is pumped to the carburetor	Check the filter, fuel pump (if applicable), and the carburetor
The engine runs irregularly and/or lacks power Dense and/or blue exhaust fumes	Faulty ignition	Check the spark plugs and ignition system
	Low fuel level in the tank	Top up
	Dirty or old fuel	Empty the fuel tank and add fresh fuel.
	Clogged carburetor filter	Check and clean
Black exhaust fumes	Excessively oily carburetion	Check the starter and command cable
Engine overheating	Spark plugs with inadequate heat rating	Check
	Carburetion problems	Check the carburetor
	Insufficient oil level	Check and top up
	Clogged suction system	Check and clean the air filter and the suction pipe.
	Dirty cooling flaps	Clean
	Broken cooling fan	Replace
The engine idling speed is too high or too low.	Incorrect cable adjustment	Adjust
Abnormal noise and vibrations	Loose bolts and screws	Check and tighten to the prescribed values

[*] Check the engine Manufacturer's Manual

IMPORTANT INFORMATION

Characteristics of the original belts

The standard belts on the market have different characteristics compared to the requirements of the original spare belts, supplied by the authorized dealer. The latter are designed and manufactured in close cooperation with the belt supplier and the machine manufacturer. Here are the reasons why it is important to choose an original belt, useful when making such decisions.

a. **Adhesion on the pulley.**
The belt rests with the sides inclined against the walls of the pulley. There must be a gap between the belt and the bottom of the groove.



b. **Floating pulley on cutting equipment.**

The original Power Take Off (PTO) belt is designed to work even if the pulleys move up and down and tilt at the same time.

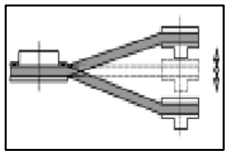

c. **Curvature in two directions.**
All the original belts, which work with tensioning arms acting on the external side, are equipped with reinforcement. The reinforcement is designed specifically for these cases.

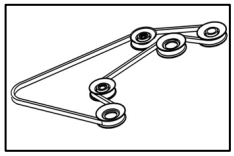

2. TRANSMISSION – BRAKES - WHEELS

Characteristics of the original belts

The standard belts on the market have different characteristics compared to the requirements of the original spare belts, supplied by the authorized dealer. The latter are designed and manufactured in close cooperation with the belt supplier and the machine manufacturer. Here are the reasons why it is important to choose an original belt, useful when making such decisions.

a. **Adhesion on the pulley**. The belt rests with the sides inclined against the walls of the pulley. There must be a gap between the belt and the bottom of the groove.

b. **Floating pulley on cutting equipment.** The original Power Take Off (PTO) belt is designed to work even if the pulleys move up and down and tilt at the same time.

c. **Curvature in two directions.** All the original belts, which work with tensioning arms acting on the external side, are equipped with reinforcement. The reinforcement is designed specifically for these cases.

Problem	Probable cause	Solution
The machine moves slowly, loses power, or doesn't move at all	Slack belt	Adjust
	Worn or oily belt	Replace
	Broken pulleys	Replace
	The brake is not adjusted correctly.	Check and adjust
	Hydrostatic unit failure 1)	Check the Manufacturer's Instruction Manual.
The machine will not move in either direction	Pulley splines broken	Replace
	Hydrostatic unit failure 1)	Check the Manufacturer's Instruction Manual.
The machine does not reach the foreseen speed in forward drive 1)	Incorrect pedal adjustment 1)	Adjust
Uncertain or ineffective braking	The brake is not adjusted correctly	Check and adjust
Hydrostatic unit overheating 1)	Insufficient oil level 1)	Top up
	Clogged oil filter 1)	Clean and/or replace
Abnormal noise and vibrations	Slack or worn belt	Check and/or replace
	Irregular fan rotation	Check the condition of the fan, that it is securely fastened in place, and that nothing interferes with the rotation movement
	Incorrect positioning of the bypass valve 1)	Check and adjust
	Loose bolts and screws	Check and tighten to the prescribed values.
The machine moves in neutral gear 1)	Incorrect micro-switch adjustment 1)	Adjust
	Slack or worn linkage system 1)	Check and/or replace
Pushing the machine by hand is difficult 1.	Bypass partially enabled 1)	Check
The parking brake does not stop the machine on a 30% slope	Incorrect brake adjustment	Adjust
Excessive clearance on the front wheels	Worn bearings	Replace

IMPORTANT INFORMATION

The original blades have design, material, and processing characteristics optimized for use on the equipment for which they were designed; these characteristics are not present in so-called “compatible” spare parts.

Here are the reasons why it is important to choose an original blade, useful when making such a decision.

3. CUTTING DECK

Characteristics of the original blades

The original blades have design, material, and processing characteristics optimized for use on the equipment for which they were designed; these characteristics are not present in so-called “compatible” spare parts.

Here are the reasons why it is important to choose an original blade, useful when making such decisions.

a. **No breakage of the blade ends.**
Using steel balls, the manufacturer simulates what can hap- pen when mowing over any foreign bodies on the lawn. This can ruin the blade edge, but no component can come loose, fall off, or be hurled away.



b. **No breakage of the blades.**
The impact test is the most severe durability test that any lawnmower can be subjected to. An iron tube is placed exactly inside the blades when the mower is running. The blade may deform, but it will never, under any circumstances, fall off or break. This test verifies that blades and other components meet the high safety requirements.



c. **Excellent cutting result.**
The blades and blade ends supplied by the authorized dealer are optimized for the application for which they are intended. In short, this means that the blades are suitable for the shape of the casing and for the number of revolutions to provide the best possible cutting result..

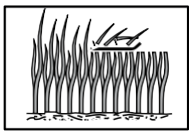

Problem	Probable cause	Solution
The blades do not engage or do not stop promptly within 5 seconds when they are disengaged.	Slack belt	Adjust the engagement
	Incorrect adjustment of the engagement spring	Adjust the engagement
	Electromagnetic engagement problems	Check and/or replace
Uneven mowing	Cutting deck not parallel to the ground	Check the tire pressures
		Align the cutting deck with the ground.
	Blades cutting badly	Check their condition and see that they are well-sharpened.
	Misaligned blades	Check the blade shafts and flanges.
Abnormal noise or vibrations	Loose joint bolts and screws	Check and adjust
	Pulleys or guide pulleys are worn and do not rotate correctly	Check and/or replace

4. STEERING

Problem	Probable cause	Solution
Excessive clearance on the steering wheel	Worn pinion and crown teeth	Adjust and/or replace
The machine does not maintain a straight line when the steering wheel is straight.	Incorrect tie-rod adjustment	Adjust

4. ADJUSTING AND TUNING

4.1 ADJUSTING THE ENGAGEMENT AND CHECKING THE BLADE BRAKE

GENERAL INFORMATION

The blades are driven by the engine by means of a “V” belt and are engaged by an electromagnetic clutch.

After a certain amount of use, the belt can become longer, which can result in malfunctioning, i.e.:

- belt slipping = belt stretched
- difficulty in disengaging, with the blades continuing to run = belt shortened

In both cases, the stretcher needs to be adjusted. Disengaging the blades causes the cutting in of a brake, incorporated in the electromagnetic clutch, whose task is to stop the blades from rotating within five seconds.

RELATED TOPICS

[5.2] Removal of the side guards (if provided)
[6.6] Replacement of the blades' control belt
[7.5] Electromagnetic clutch check

A. Adjusting blade engagement

Remove right side guard (if provided)

With the cutting deck in its lowest position, suitably turn the adjuster nuts (1) until the spring (2) reaches the length “L”. TTM86 L=35mm. TTM92 L=45mm, TTM102 L=60mm

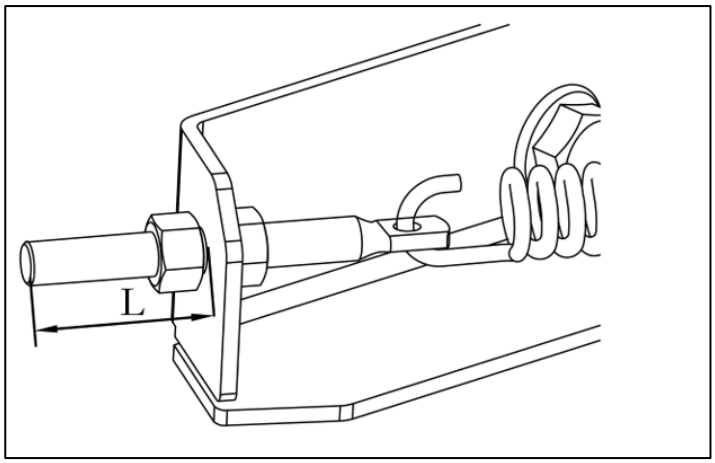

WARNING! Reassembling the right-side guard (if provided)

B. Checking the blade brake

WARNING! Correct operation of the brake, which must ensure that the blades stop within 5 seconds from disengagement; longer stopping times do not comply with the safety standards.

If the blades do not stop within 5 seconds from disengagement, appropriate checks must be made to the electrical system, and the clutch must be replaced if no result is achieved.

4.2 BRAKE ADJUSTMENT

GENERAL INFORMATION

Reduced braking power is corrected by adjusting the spring on the brake rod.

RELATED TOPICS

[1.1] Identification of the transmission unit
[5.6] Removal of the rear axle (mechanical drive models)
[5.6a] Removal of the rear axle (hydrostatic drive models)

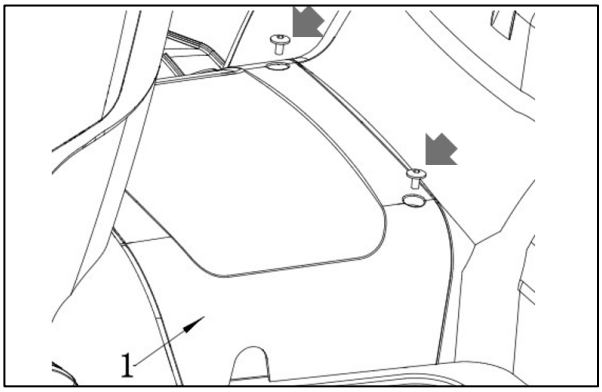

The brake adjustment spring can be accessed by moving the inspection hatch (1).

The adjustment is to be made with the parking brake engaged and consists of altering the length of the spring (2) to the best measurement. The braking capacity is increased by screwing the nut down on the rod (and thus shortening the length of the spring).

Loosen the nut (4) which retains the bracket (5) and then turn the nut (6) so that the length «A» of the spring (2) is:

- mechanical drive models 53 - 55mm

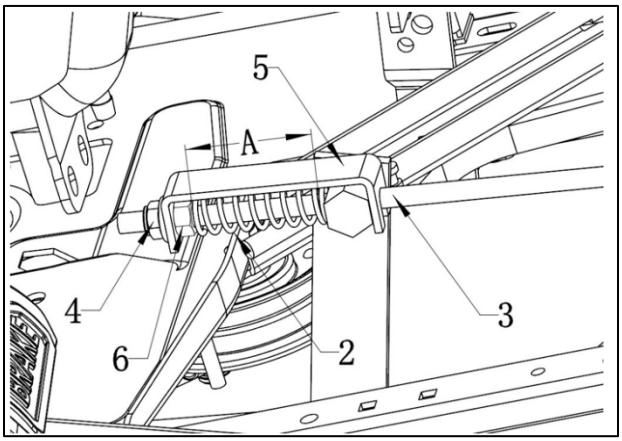

Measured from the inside of the washers. When the adjustment has been made, tighten the nut (4).

NOTE: Never go under these amounts to avoid overloading the brake unit.

WARNING! When the adjustments have been made, the parking brake should prevent the machine from moving on a slope of 30% (16°) with the driver in position.

If braking is still poor or uneven even after having made the adjustment, proceed as indicated, according to the type of transmission fitted on the machine.

- **Mechanical drive models**

Remove the control rod (1) from the lever (2) and check that this lever has a free movement of 20 mm (measured vertically next to the pin rod) before beginning the braking action. If this is not the case, the free movement can be adjusted with the screw (3) unless the brake pads or discs are so worn that they need replacing.

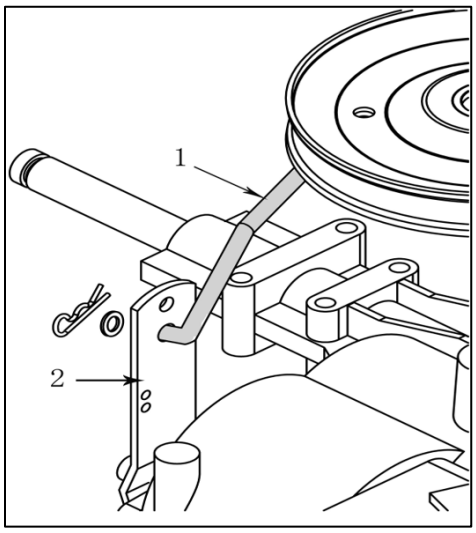

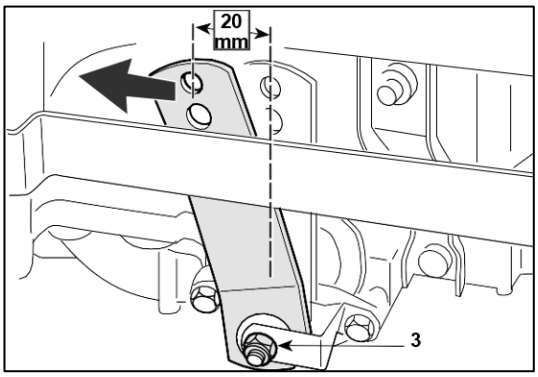

When connecting the rod (1), be sure to use the second hole in the lever (2); then check the length of the spring again.

- **Hydrostatic drive models**

You cannot make any further adjustments from the outside. Therefore, you need to dismantle the whole rear axle of the machine and contact one of the manufacturer's Service Centers.

4.3 DRIVE PEDAL ADJUSTMENT

GENERAL INFORMATION

This operation should be carried out every time the rear axle, pedal, or control rod is removed, in order to get the correct travel for the pedal and to reach the envisaged speeds both forwards and in reverse.

RELATED TOPICS

[7.5] Fitting safety microswitches

Hydrostatic drive models only

All the adjustment elements can be accessed by removing the inspection hatch (1).

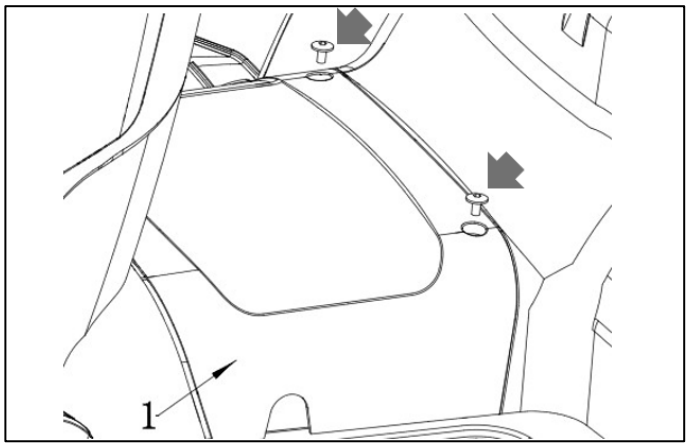

A. Adjusting the pedal in the neutral position

Regulating consists of adjusting the position of the pedal (3) with the hydrostatic group lever (2), which is brought to the forward maximum speed position by a spring.

To get the speeds that both forward and reverse gears provide (and consequently determine the “neutral” position for the pedal), the inner lever (3) on the pedal axis must be located perfectly vertical with the lever (2) of the hydrostatic unit in “neutral”.

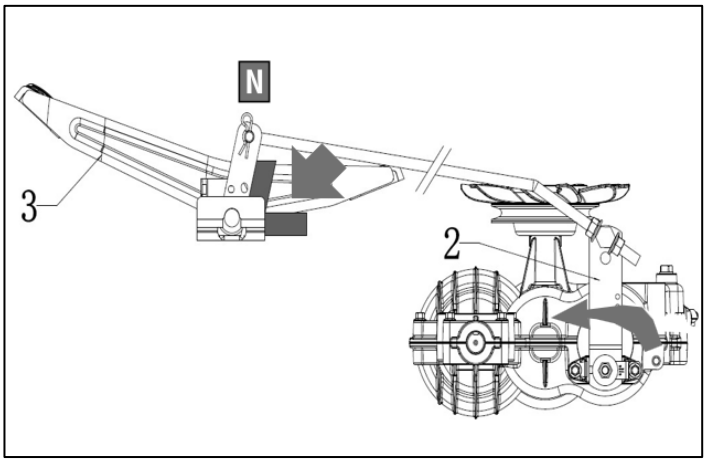

This is obtained using a bracket (4), by working on the nuts (5) until reaching the desired situation, taking care not to accidentally change the position of the lever (3) during adjustment.

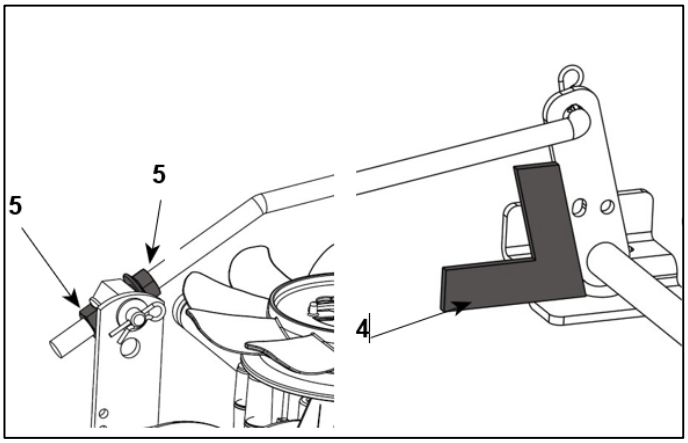

B. Adjusting the "neutral" position of the microswitch

IMPORTANT! This is a very important adjustment for the correct operation of the safety devices for the starting and stopping of the machine during work.

The neutral position "N" is signaled by the microswitch (11) of the cam (12).

After checking that the adjustment "A" has been correctly completed, make sure that the pedal is released and in neutral "N", then loosen the fastening screws (13) of the microswitch and position it in line with the tip of the cam, so that it stays pressed down.

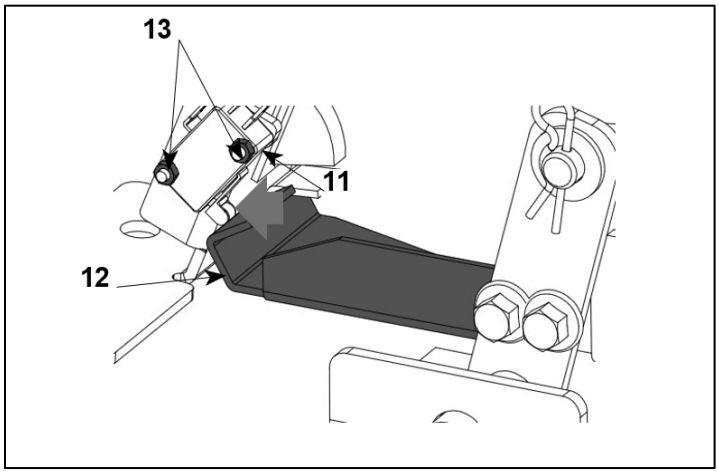

By moving the pedal to the forward gear, neutral position, and reverse gear, you should hear the click of the button at each gear change before the wheels start moving.

4.5 ALIGNING THE CUTTING DECK

GENERAL INFORMATION

The cutting deck is lowered by a level-controlled cable and is moved by two trace rods at the front and back.
To get a good cut, the cutting deck must be parallel with the ground crosswise and slightly lower at the front.
Two adjustments can be made to the jointed system of the cutting deck:

a. a combined adjustment to the parallel and the minimum height front and back
b. An adjustment to just the parallel across the cutting deck

RELATED TOPICS

[2.2] Tools
[5.2] Removal of the side guards (if provided)

TIGHTENING TORQUES

Front
(Tires 13 x 5.00-6) 1.5 Bar
(Tires 15 x 5.00-6) 1.0 Bar
Rear
1.2 Bar

Remove the left and right-side guards (if provided).

Check the tire pressures. If one or more tires have been replaced or you find differences in diameter, do not attempt to compensate for these differences by giving different tire pressures, but make the adjustments as in points «A» and «B».

A. Combined adjustment to the parallel and the minimum front and rear height

Put the lawn-tractor onto a flat and stable surface (such as a work bench) and put blocks beneath the cutting deck in line with the center lines of the blades:

- at the front 26 mm (1)
- at the rear 32 mm (2)

Put the height lever in position «1».

Completely loosen the adjuster, the nuts (4 - 6), and the adjusting pin (5) and the locknuts (3 - 7) of the three trace rods until the deck is resting on the blocks.

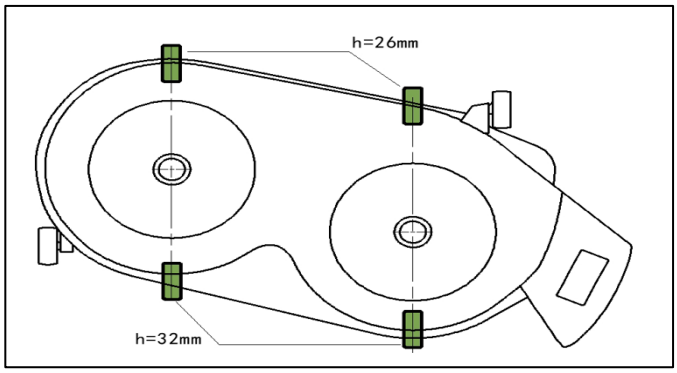

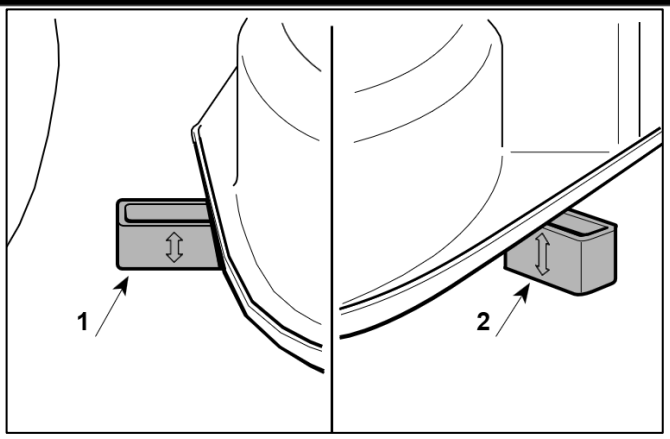

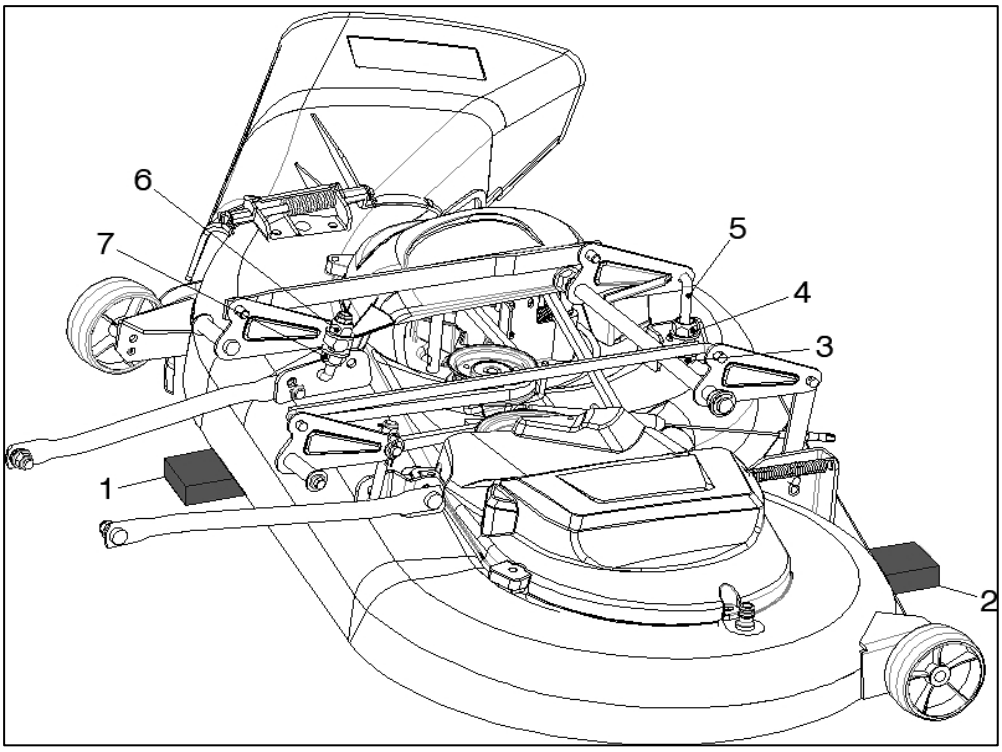

Turn the adjuster (3) until the control cable is taut.

Tighten the two rubber nuts (4 - 6) and the adjusting pin (5) to the point where the deck just begins to lift, then tighten the two locknuts (3 - 7).

Remember to tighten all the nuts and locknuts once these adjustments have been made.

- Reassemble the right and left side guards (if provided).

B. Adjusting the parallel across the cutting deck

Any difference in height from the ground between the left and right sides of the deck can be compensated by turning the two nuts (4 - 6) and locknuts (3 - 7) of just the back rods.

Remember to tighten all the nuts and locknuts once these adjustments have been made.

Reassemble the right and left side guards (if provided).

4.6 ADJUSTING THE STEERING PLAY

GENERAL INFORMATION

Steering play must never be excessive in order not to affect driving precision.

RELATED TOPICS

TIGHTENING TORQUES

3 Nut for ring gear (25 ÷ 30 Nm)

Check that the steering play is not caused by the slackening off of the tie-rod system, and fully tighten all the tie-rod and ball joint nuts.

If the play is due to the crown wheel/pinion pairing, the position of the spacer, fitted to lift the crown wheel and reduce the gap between the teeth, must be changed.

Remove the inspection hatch (1).

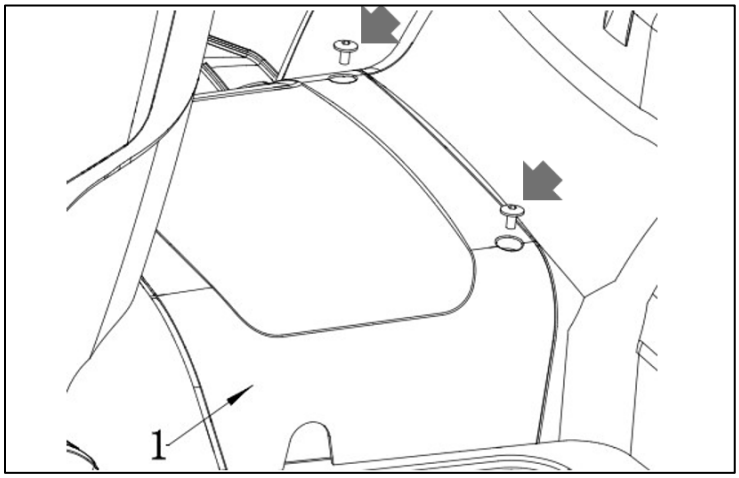

Unscrew the nuts (6) and the guide (5).

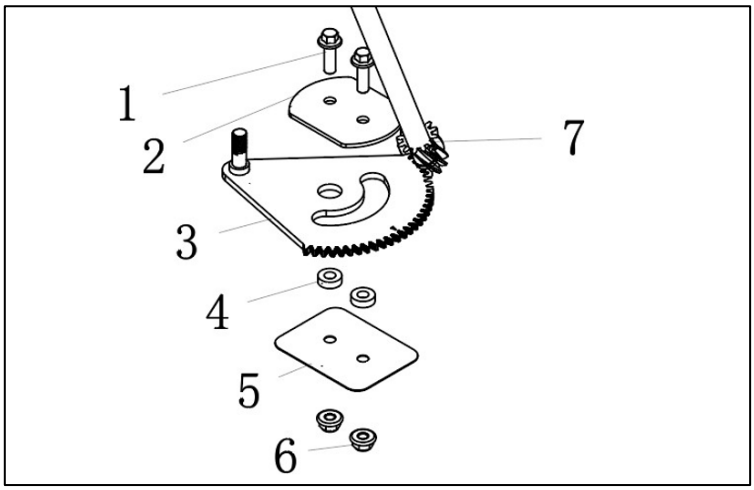

Remove the ring gear (3) and fit the two-block washers (available as spare parts) (4) under it to place it in a higher position with respect to the pinion (7), reducing the gap between the teeth.

Reassemble the ring gear, matching the marks on the ring gear (3), in the drive direction.

Reassemble the nuts (6), tighten them as much as they need to ensure steering manageability, without creating excessive play.

If the addition of a block (4) does not eliminate the play between the ring gear pinion teeth, replace them, since another block may not be added.

4.7 STEERING GEOMETRY ADJUSTMENT

GENERAL INFORMATION

The correct steering geometry is given by the values of the center distance between the joints of the tension rod and the wheel connecting rod. Any faults caused by knocks or accidents result in reduced driving precision and increased wear on the tires. These can be overcome as follows:

- uneven or excessive wear on the front tires = incorrect toeing
- The machine does not maintain a straight line when the steering wheel is straight = adjustment of tie rods.

RELATED TOPICS

TIGHTENING TORQUES

2 Connection rod fastening nuts 25 ÷ 30 Nm
8 Nut for articulated joint 45 ÷ 50 Nm

NOTE: Before any other action, check that the joint fastenings have not worked loose.

A. Toe-in check

The gap between the connection rod holes (1) on the wheels ensures a correct front wheel toe-in check without requiring adjustment.

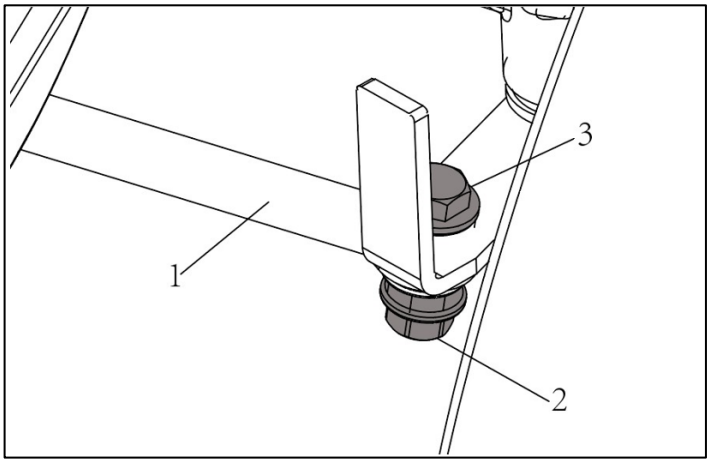

Toe-in check may only change due to rod deformation (1) or due to spindle bushing wear.

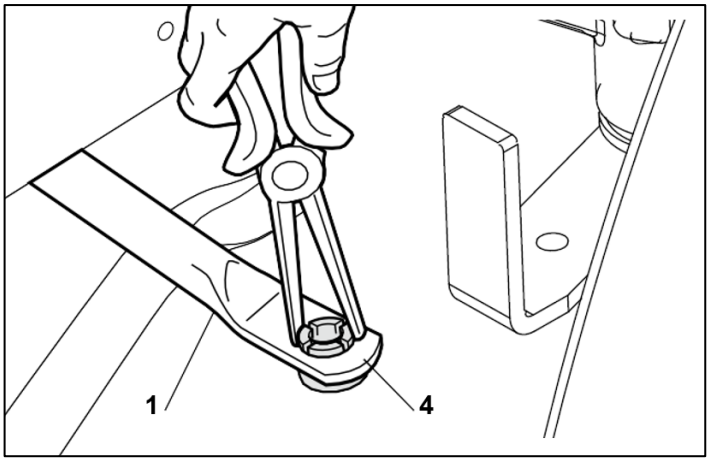

To replace, unscrew the nut (2) with the screw (3) and remove the bushing (4) using pliers. Click the new bush (4) and tighten the nut (2) to the prescribed value.

B. Adjustment of the steering wheel

Check that the toe-in is correct (point «A») and align the front wheels.

If the steering wheel is not straight, dismantle the articulated joint (5) and screw down or up on the tie-rod (6) for the necessary amount.

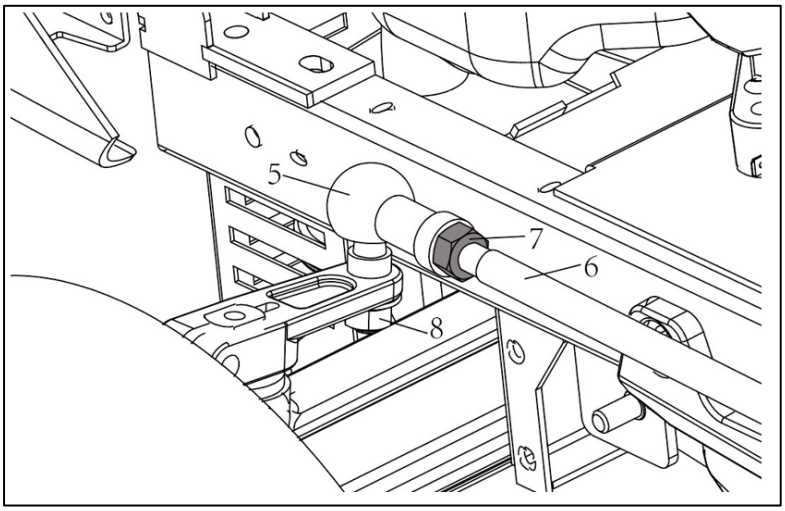

On assembly, fully tighten the locknut (7) and the fastening nut (8).

4.8 CHECKING BLADES ALIGNMENT

GENERAL INFORMATION

Excessive vibration when cutting and an uneven cut can be due to misalignment of the blades owing to deformation of the flanges or the shafts as a result of accidental knocks.

RELATED TOPICS

[2.3] Vertical positioning
[5.7] Removal of the cutting deck
[6.7] Replacement of the supports and shafts of the blades

- Put the machine into a vertical position
- remove the cutting deck.

WARNING! Always wear strong gloves when handling the blades.

WARNING! The blades are connected; the rotation of each blade engages the rotation of the other.

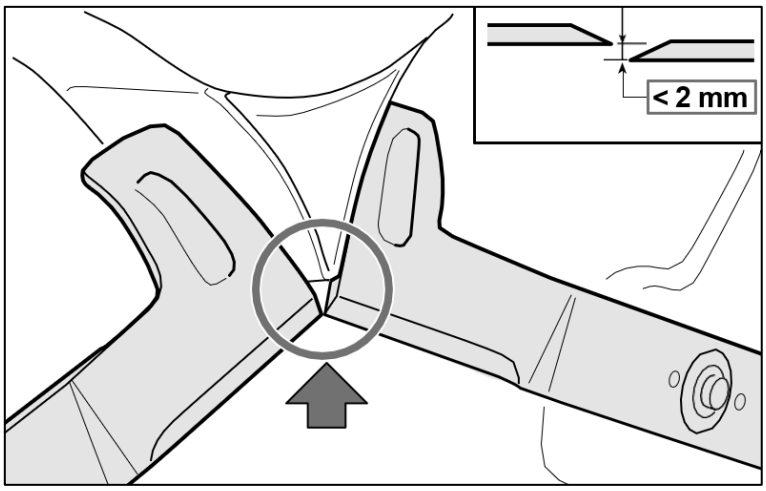

With the blades disengaged, firmly hold each blade and bring the cutting edges together in the various positions possible (A-B; A-B1; A1-B1; A1-B); at each position, they should be aligned to within 2 mm.

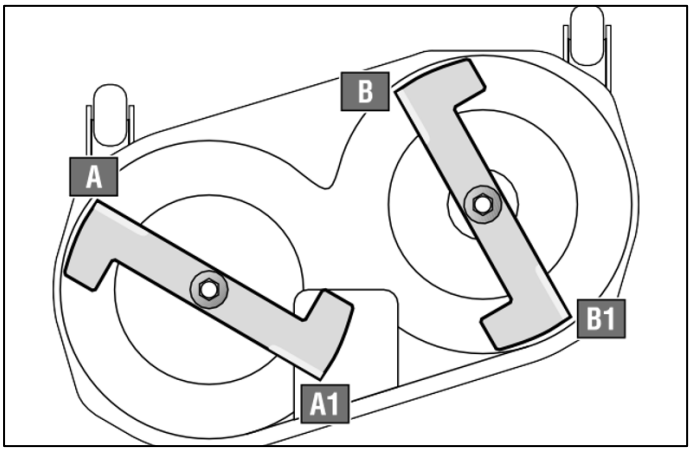

If higher amounts are found, check that the blades are not distorted. If this is not the case, check the supports or the shafts for the blades [see 6.9], replacing them if necessary, and check the condition of the point where the flanges rest on the cutting deck.

IMPORTANT! Always replace damaged blades and do not attempt to repair or straighten them. Al- ways use the manufacturer's genuine spare parts!

4.9 REMOVING, SHARPENING, AND BALANCING THE BLADES

GENERAL INFORMATION

A badly sharpened blade causes grass to become yellow and reduces grass collection capability.
If not balanced, excessive vibration can be caused during use.
Fins on broken, bent, or damaged blades reduce the grass expulsion force and can cause damage and injuries.

RELATED TOPICS

[2.4] Vertical positioning
[5.7] Removal of the cutting deck

TIGHTENING TORQUES

1a Screw for left blade	45 ÷ 50 Nm
1b Screw for right blade	45 ÷ 50 Nm

- Put the machine into a vertical position
- remove the cutting deck.

WARNING! Always wear protective gloves when handling the blades and protect your eyes when sharpening.

WARNING! The blades are connected; the rotation of each blade engages the rotation of the other.

A. Removing and reassembling

For removing a blade, it must be firmly held and the central screw (1) undone, bearing in mind that:

- The screws on the left blade (1a) and on the right blade (1b) are both unscrewed clockwise.

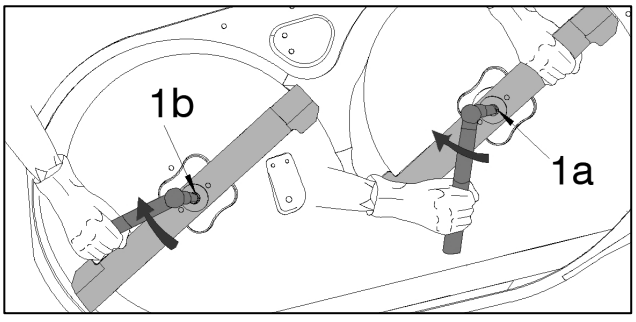

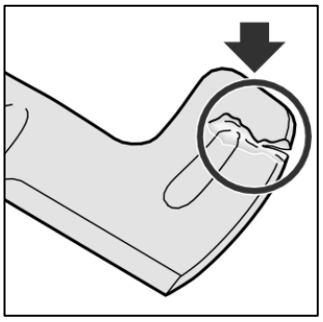

Always check that the fins are intact without cracks or breaks. Always replace damaged blades.

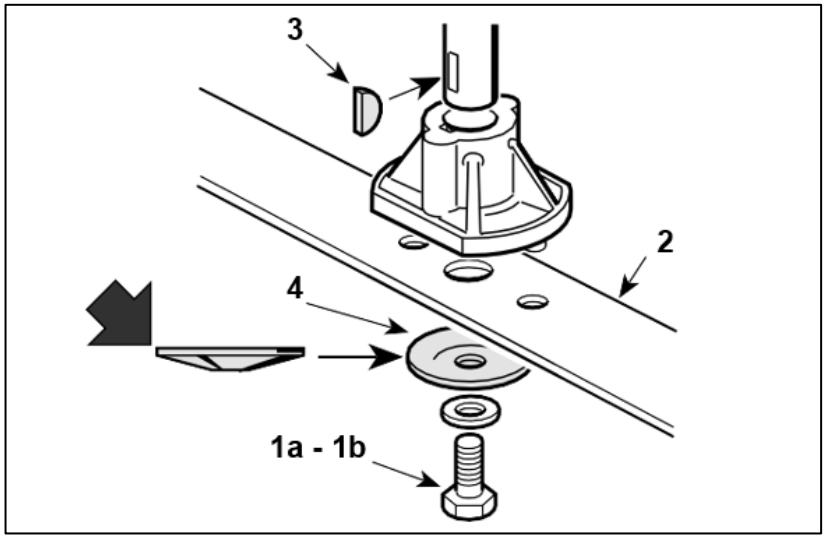

On assembly, be careful to:

- correctly position the keys (3) on the shafts.
- correctly locate the right and left blades, with the fins facing towards the inside of the plate.
- fit the flexible disc (4) so that the concave part is pressing against the knife.
- tighten the screws (1a – 1b) with a torque wrench set to 45-50 Nm.

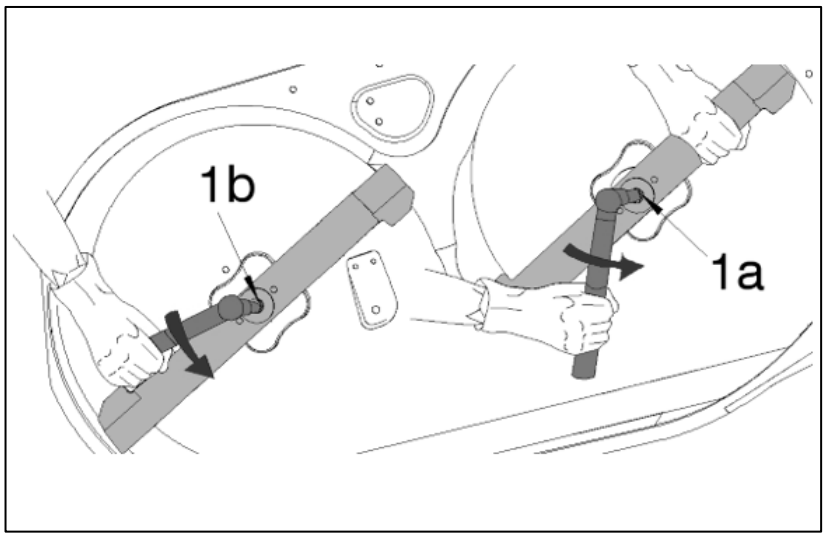

B. Sharpening and balancing

Always sharpen both cutting edges of the blade (2) using a medium-grade grinder. Sharpening must only be done from the rounded side, removing as little material as possible.

The blade is to be replaced when the cutting edge has worn down to 10 mm.

Using the appropriate equipment, check the balance to make sure that there is a maximum difference of 2 grams between one side and the other.

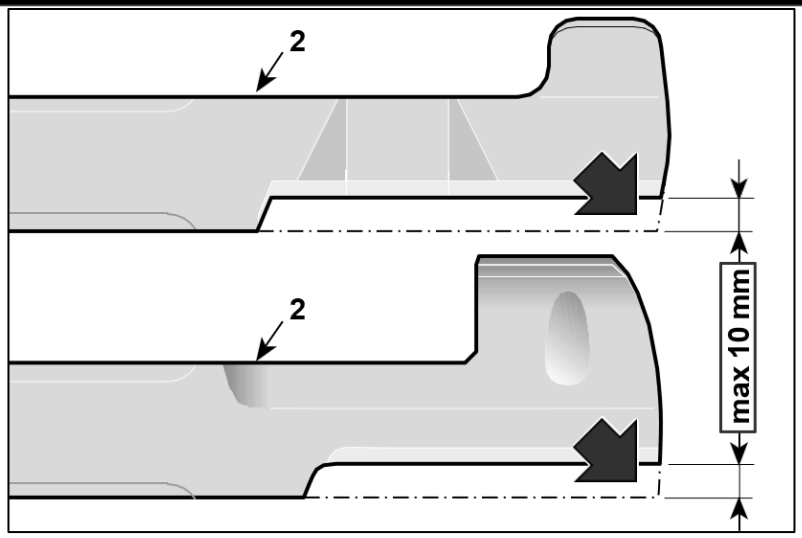
2
2
max 10 mm

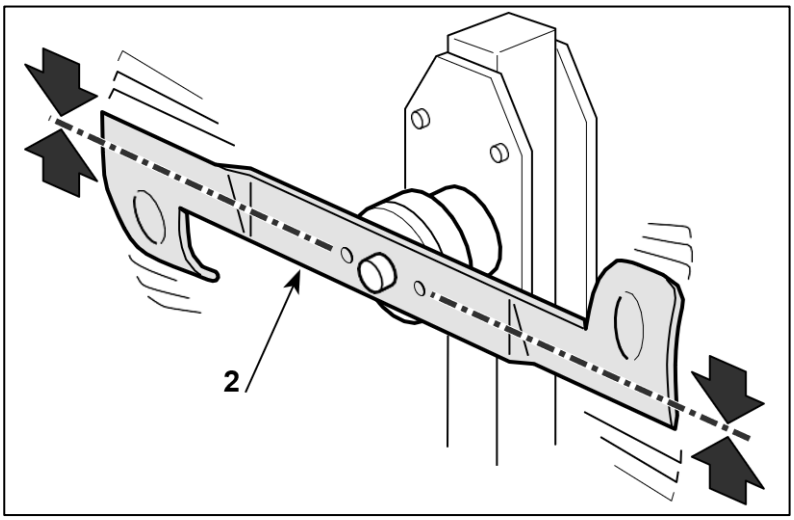
2

5. REMOVAL OF EXTERNAL AND BALANCING PARTS AND MAIN ASSEMBLIES

5.1 REMOVAL OF FRONT HOOD

GENERAL INFORMATION

The removal of the front hood gives greater accessibility to:

- The engine and its accessories
- The silencer and protection devices

RELATED TOPICS

Models with lights

The hood can be secured in two ways.

Take out the split pin (2) from the right-hand side and remove the shaft (1) by moving it to the left.

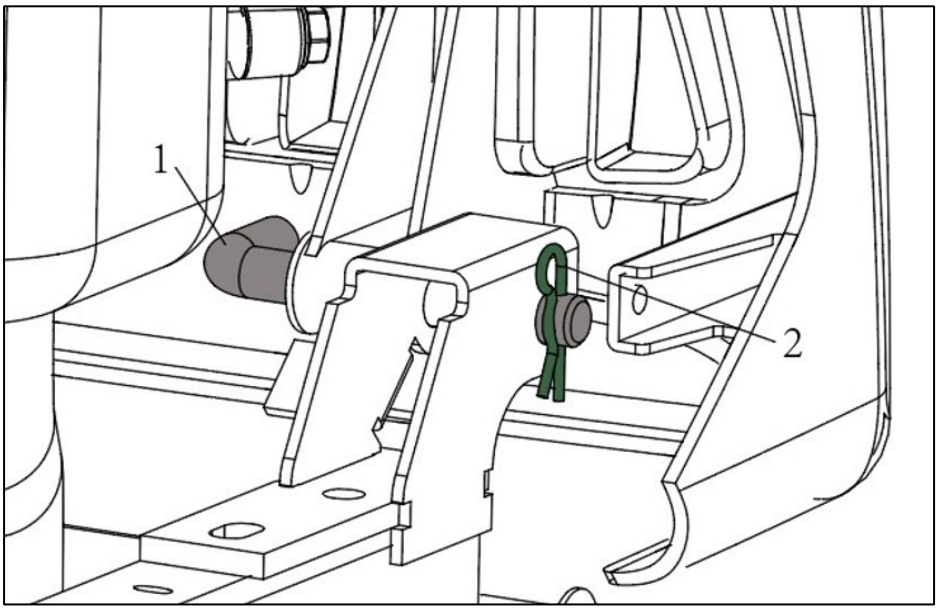

5.2 REMOVAL OF THE SIDE GUARDS (IF PROVIDED)

GENERAL INFORMATION

The removal of side guards allows access to the blades, drive belt, and cutting deck adjusting keys.

RELATED TOPICS

TIGHTENING TORQUES

3 - 4 - 5 Guards fastening screws 8 ÷ 10 Nm

Each guard (1 - right) or (2 - left) is fastened by:

- 1 front self-tapping screw (3),
- 1 middle self-tapping screw (4),
- 1 rear self-tapping screw (5)

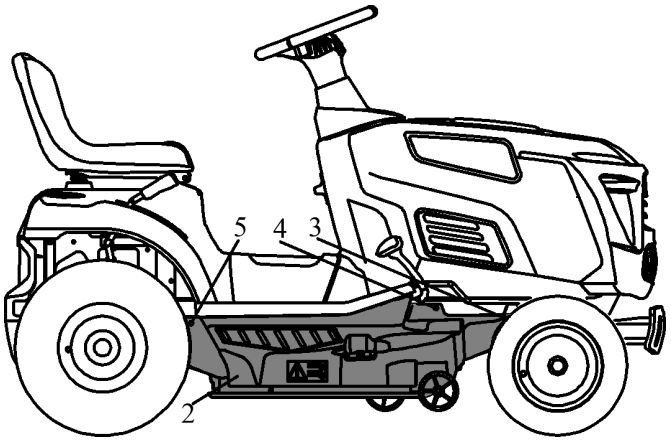

The front self-tapping screws (3) and middle （4） and rear (5) are held

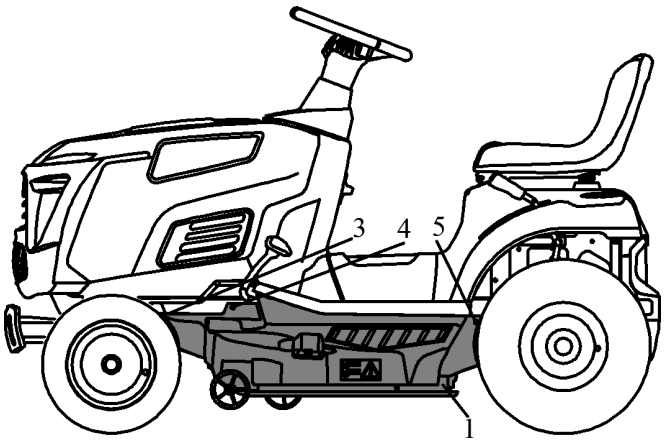

IMPORTANT! When assembling, ensure fasteners are used, as they are essential to allow disassembly and reassembly of the guards by the user, without jeopardizing the safety of the machine.

5.3 REMOVAL OF THE WHEEL COVER

GENERAL INFORMATION

Complete removal of the wheel cover is required for its replacement and to access the seat micro switch, placed below the two spring support cross-pieces.

RELATED TOPICS

[5.2] Removal of the side guards (if provided)

- Remove the left and right-side guards (if provided).

Remove the inspection hatch (1).

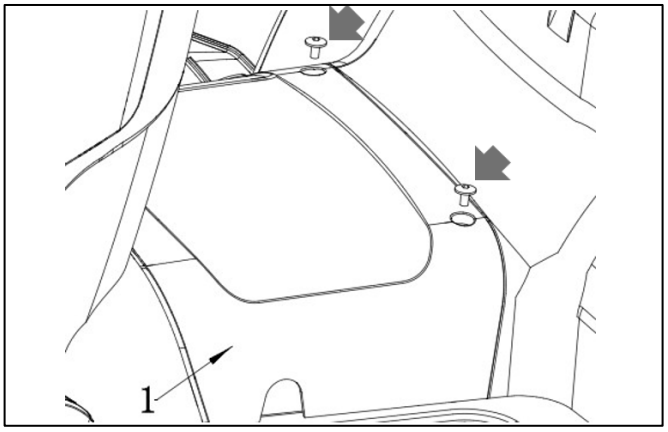

Remove the battery according to the diagram.

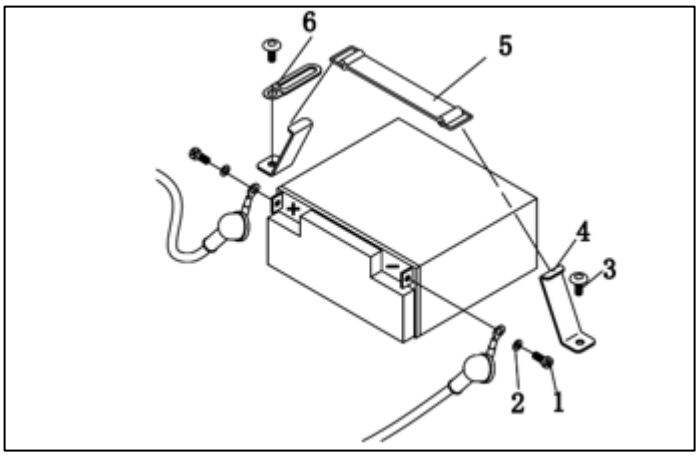

Models with mechanical transmission:

Remove the gear lever knob (7) from the lever (8)

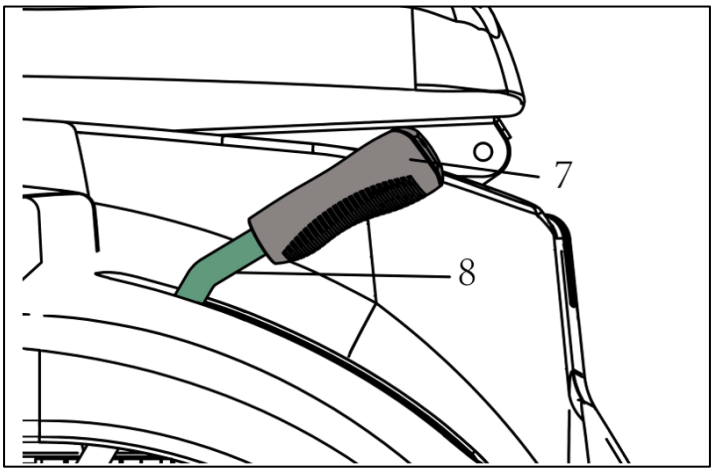

The cover (9) is held by:
– 2 screws (3) inside the battery compartment

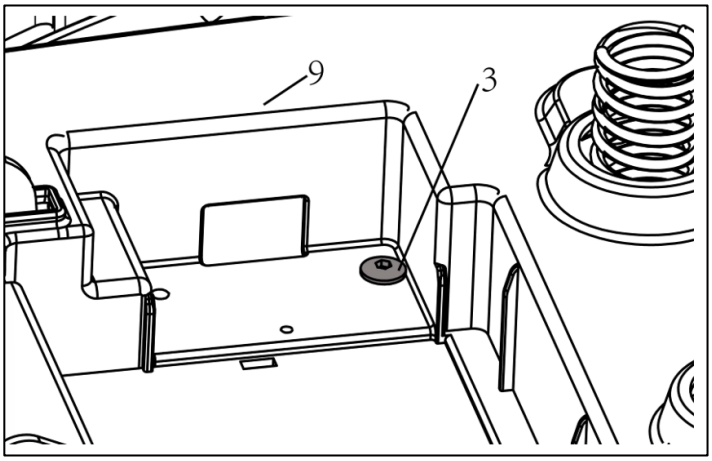

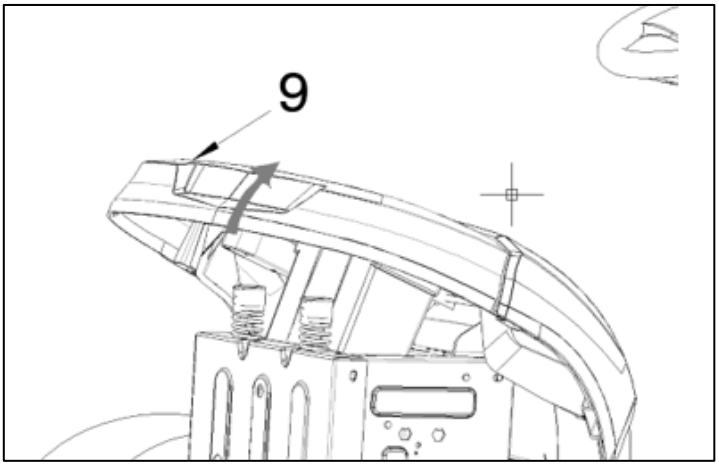

The removal of the cover (9) is facilitated by pushing it forward and simultaneously lifting it from the rear.

On assembly, follow the procedures described above in reverse order.

- Reassemble the right and left side guards (if provided).

5.4 REMOVAL OF THE DASHBOARD

GENERAL INFORMATION

Dashboard removal is only required for its replacement.

RELATED TOPICS

TIGHTENING TORQUES

11-12-13-14 Dashboard fastening screws 12÷15 Nm

Remove screw (9) and remove the steering wheel cover (8).

Unscrew the central nut (7) and screw (2) and remove the steering wheel (5), making sure to recover the spacer and washer (6).

Remove the steering shaft cover (3) and the splined hub (4)

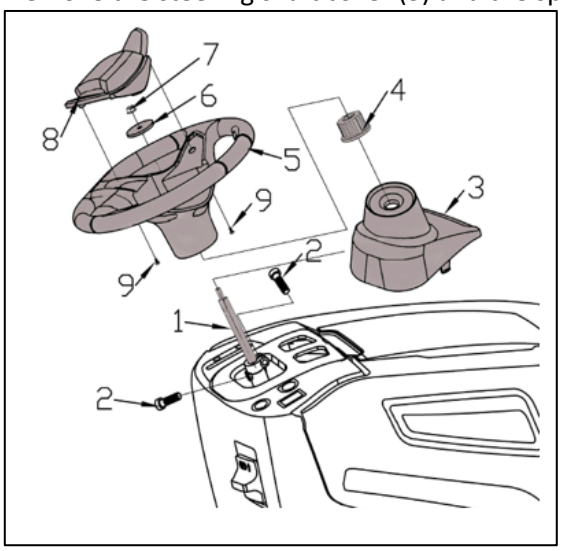

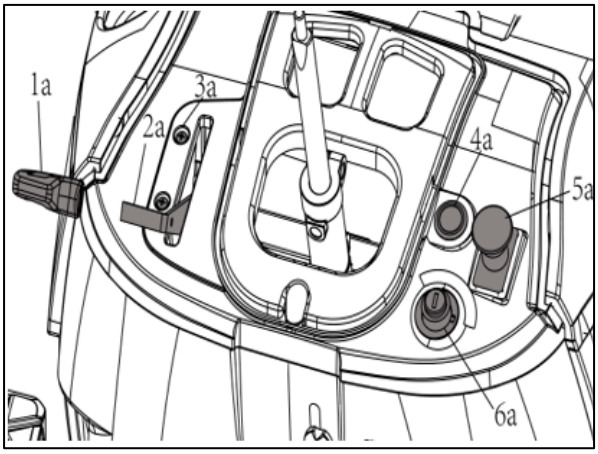

Unscrew the screw (3a), take off the accelerator knob (1a, 2a).

Remove the starter control (6a), remove the blade start/stop knob (5a), and remove the reverse mowing button(4a) where appropriate.

Disconnect all electrical connectors from their respective components:

- ignition key,
- blade engagement clutch switch,
- battery charge connector,
- fuses,
- electronic circuit board.

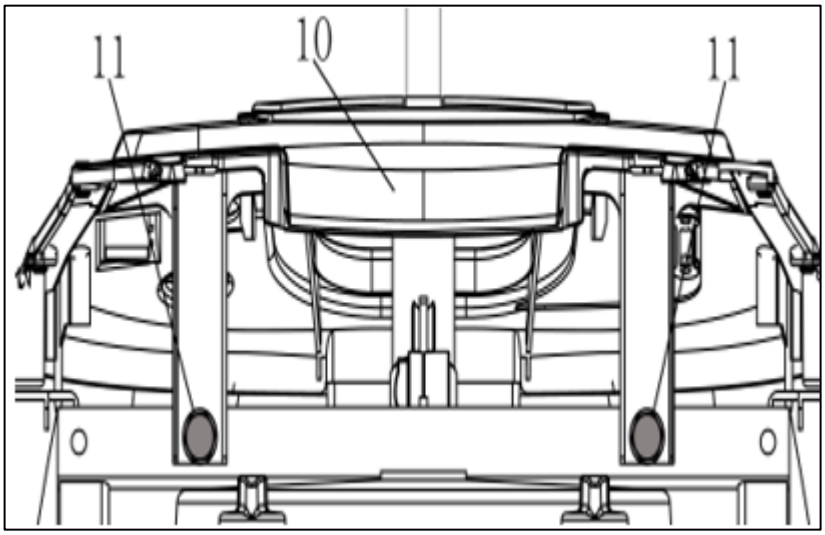

The dashboard (10) is held by:

- 2 upper frontal screws (11) inside the engine compartment
- Unscrew the screw (13)
- Do not lose the rubber pad (12)

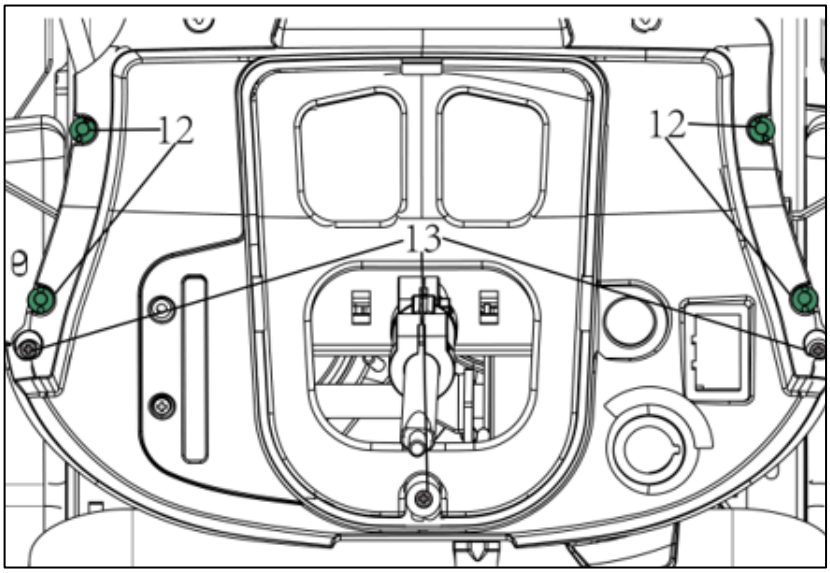

5.5 REMOVAL OF THE ENGINE

GENERAL INFORMATION

Since there are different types of drives, the stage described here refers to those shared or similar in all types of engines.

RELATED TOPICS

[5.1] Removal of the front hood
[6.8] Replacement of the accelerator and adjustment of the carburetor

TIGHTENING TORQUES

5 Screw for pulley 45 ÷ 50 Nm
Screws for engine fastening 25 ÷ 30 Nm

Remove the front hood.

For greater operating convenience, it is recommended that the transmission belt be slackened off; this is done by engaging the parking brake.

FIRST disconnect the black earth cable from the battery, and THEN the red cable, to prevent possible short circuits and dangerous situations.

Free the blade belt (1) from the clutch pulley (2).

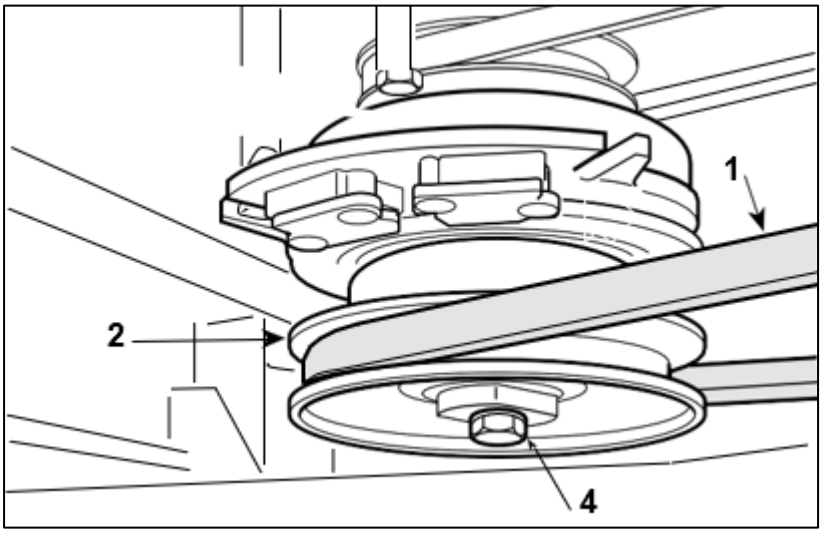

Disconnect the connectors (3) from the clutch contacts (2), unscrew the central screw (4) with the help of a power screwdriver.

Remove the clutch (2) from the engine shaft, together with the transmission command pulley (5).

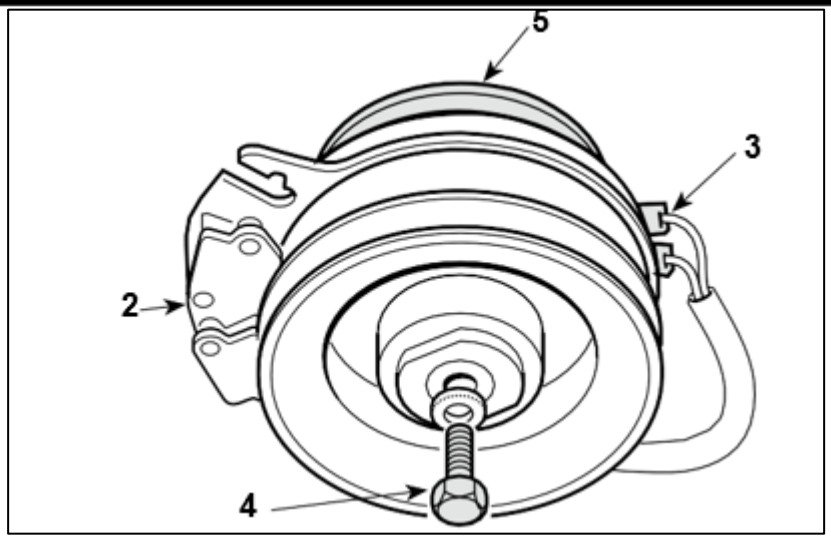

Remove the exhaust guard (6).

Disconnect the accelerator cable control and the electrical cables.

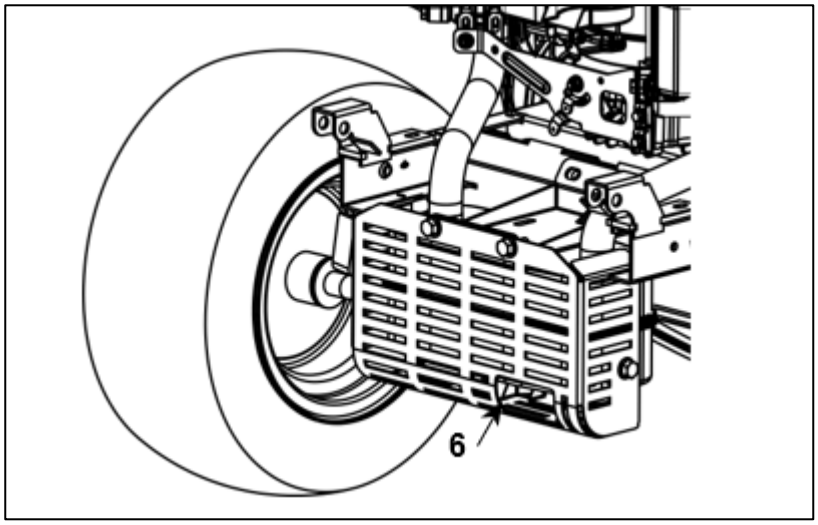

Detach the fuel line pipe, taking care not to spill.

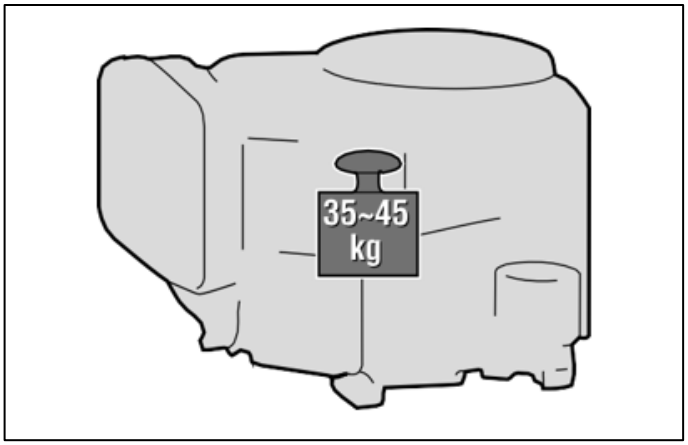

Identify and undo all the screws that fasten the engine to the chassis, then carefully lift and remove the engine using equipment suitable for the weight of the engine (about 35-45 kg) and the designated lifting points to guarantee safe working conditions.

NOTE: Some engines are held with screws of different lengths and in different positions, so it is best to label them so that no errors are made on reassembly.

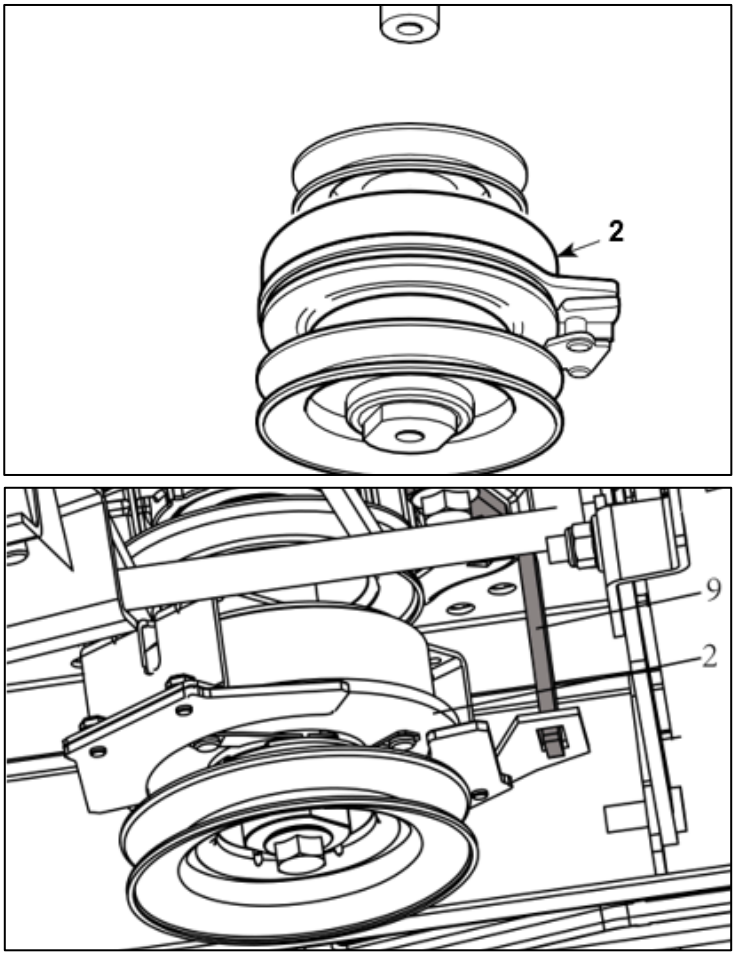

For reassembly, follow the operations described above in reverse.

Ensure that the pin (9) is inserted in the groove in the clutch (2).

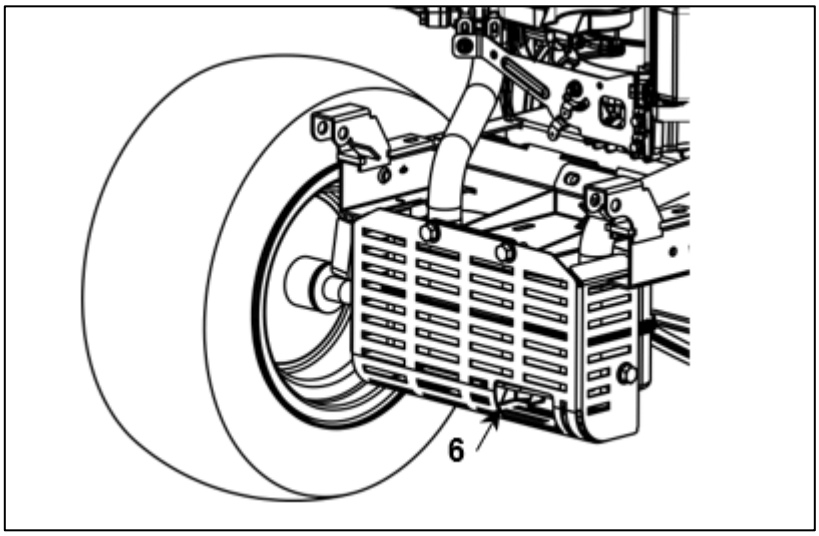

Fully tighten the engine and pulley fixing screws to the prescribed values.

Remember to fit the clamps back on the fuel pipe and check that it does not leak.

Carefully restore all electric and earth contacts and always refit the exhaust guard (6).

Reattach the accelerator cable and ...

- Adjust the «MINIMUM» position.
- Refit the front hood.

5.6 REMOVAL OF THE REAR AXLE (MECHANICAL TRANSMISSION)

GENERAL INFORMATION

The rear axle (Transaxle) is made up of a single maintenance-free sealed unit which includes the transmission unit (mechanical) and the differential, and doesn't need any maintenance. It only needs to be removed to be replaced or for an overhaul by the Manufacturer's Service Center.

RELATED TOPICS

[2.3] Lifting of the machine
[4.2] Brake adjustment
[5.6] Removing the ejection conveyor
[6.1] Removal of the wheels

TIGHTENING TORQUES

14 Screw for bracket fastening (25/30 Nm)
15 Self-tapping screw (25/30 Nm)
17 Rear axle fastening nut (25/30 Nm)

- Remove the rear of the conveyor.
- Lift the rear part of the machine
- Remove the rear wheels.

Engage the parking brake to slacken off the belt and obtain greater operating convenience.

Bring the cutting deck to the highest position.

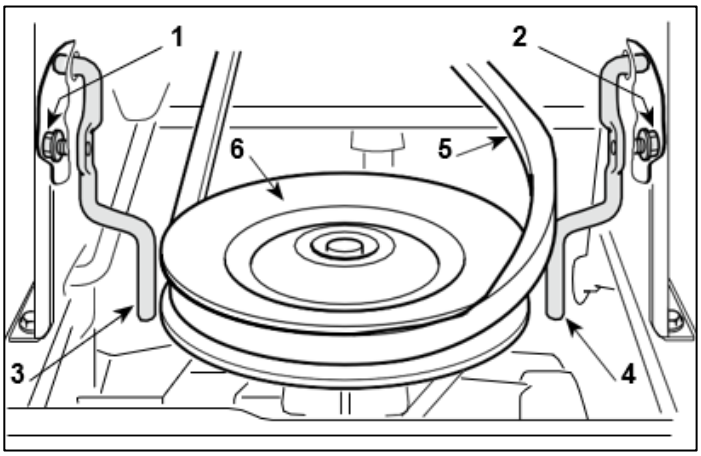

Loosen the two side screws (1) and (2) and move the two belt guides (3) and (4) forward until the belt (5) is released from the pulley (6).

Remove the split pin (7) and disconnect the gear control rod (8).

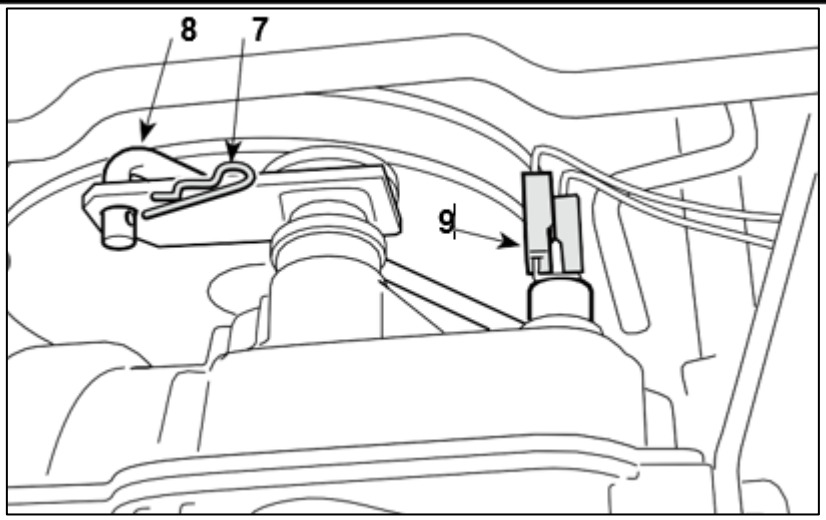

Disconnect the “neutral” signal microswitch cables (9).

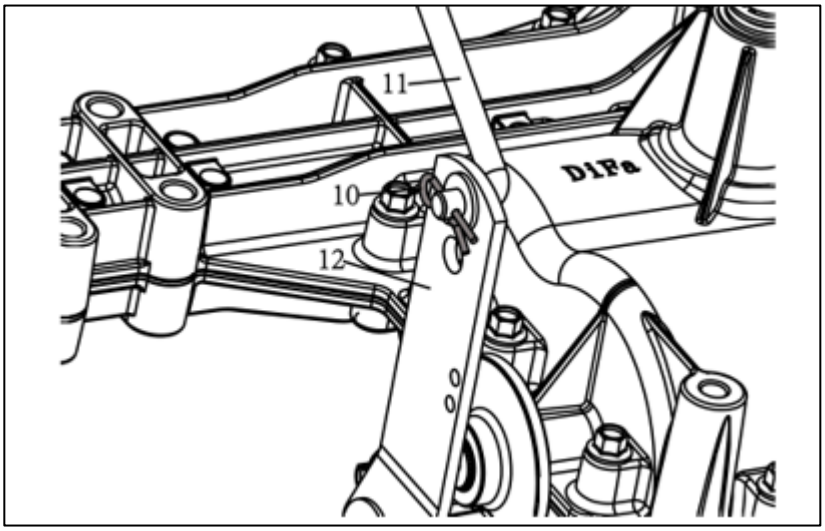

Release the parking brake to reduce spring tension on the rod, then remove the pin (10) and disconnect the brake control rod (11) from the lever (12).

The unit is supported on the left by a bracket (13) with its screws (14) and (15) and is attached to the frame by four screws (16) with their nuts (17).

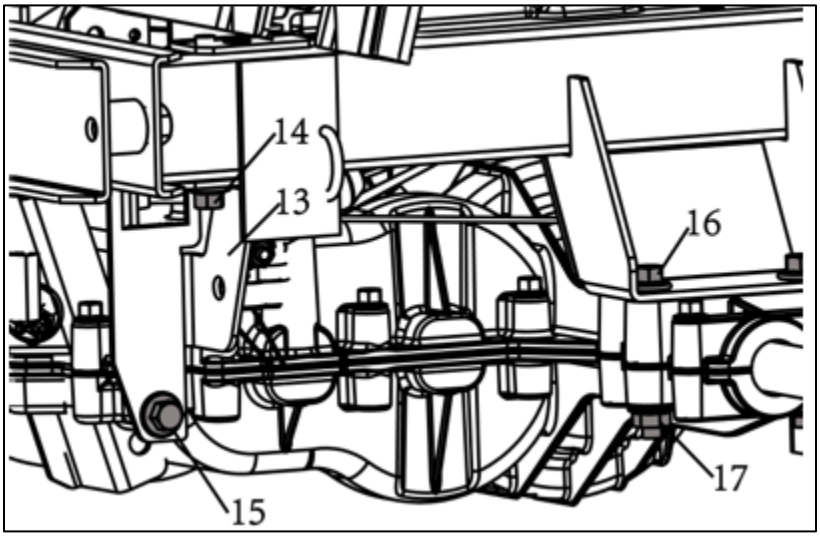

Loosen the screw (14) to give a minimum of movement to the bracket (13) and undo the two screws (16). Then carefully loosen the four nuts (17), holding up the unit so that it does not fall.

To reassemble, reverse the order of the previous operations, taking particular care with the self-tapping screw (15), which, if not screwed in correctly, could damage the threads inside so preventing it from being fastened properly.

When connecting the rod (11), be sure to use the uppermost hole in the lever (12) and replace the washer (18).

Check that the spacers (19 - 20) are correctly fitted to the shafts, in the sequence given.

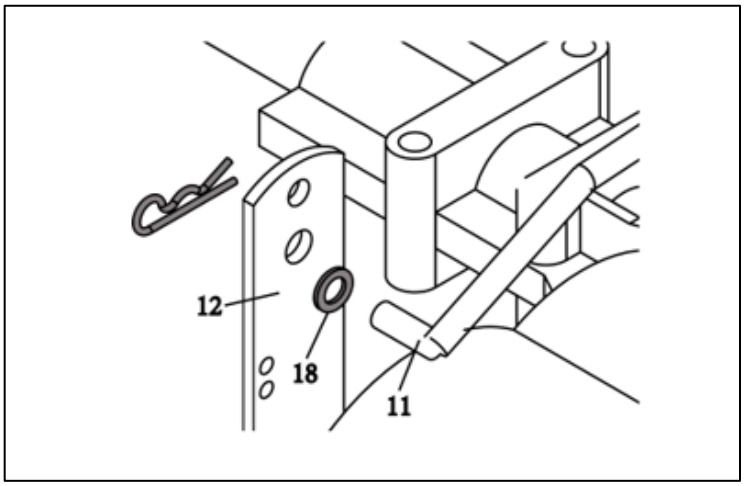

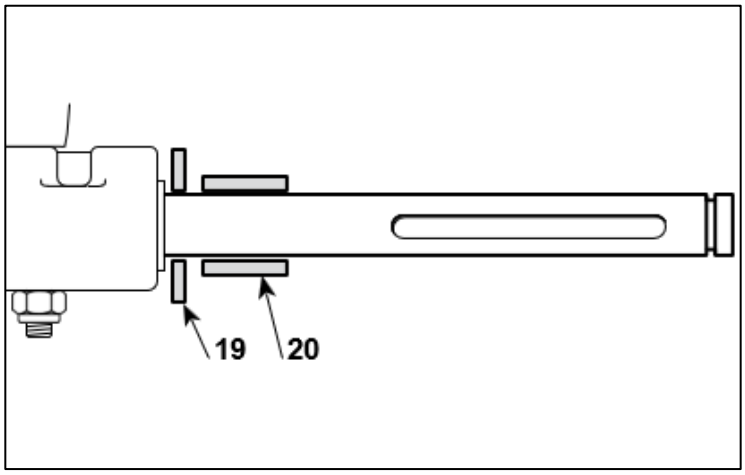

Reattach all the connections, and then ...

- Refit the rear wheels.
- Reassemble the rear of the conveyor.
- Check the brake.

5.6A REMOVAL OF THE REAR AXLE (HYDROSTATIC TRANSMISSION)

GENERAL INFORMATION

The rear axle (Transaxle) is made up of a single maintenance-free sealed unit which includes the transmission unit (hydrostatic) and the differential and doesn't need any maintenance. It only needs to be removed to be replaced or for an overhaul by the Manufacturer's Service Center.

RELATED TOPICS

[2.3] Lifting of the machine
[4.2] Brake adjustment
[4.4] Drive pedal adjustment
[6.1] Removal of the wheels

TIGHTENING TORQUES

2 Fan fastening nut (45/55 Nm)
9-10 Nuts for bracket fastening (25/30 Nm)
11 Rear axle fastening nut (25/30 Nm)

- Remove the rear of the conveyor.
- Lift the rear part of the machine
- Remove the rear wheels.

Engage the parking brake to slacken off the belt and obtain greater operating convenience.

Unscrew the nut (2) using an impact driver and remove the fan (2a) soaps to free the belt (1) from the pulley (2b). Alternatively, unscrew the engine pulley so that the belt remains loose.

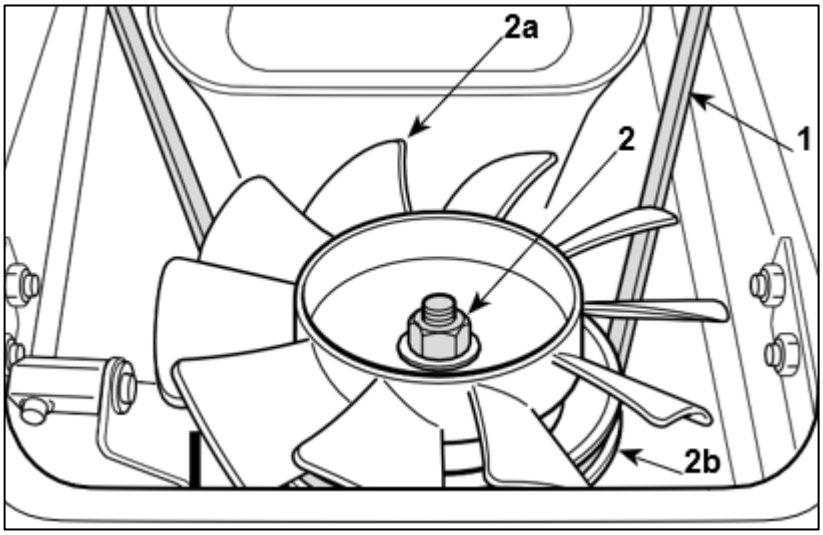

Remove the split pin (3) and the Washer (5) and disconnect the drive control lever (4).

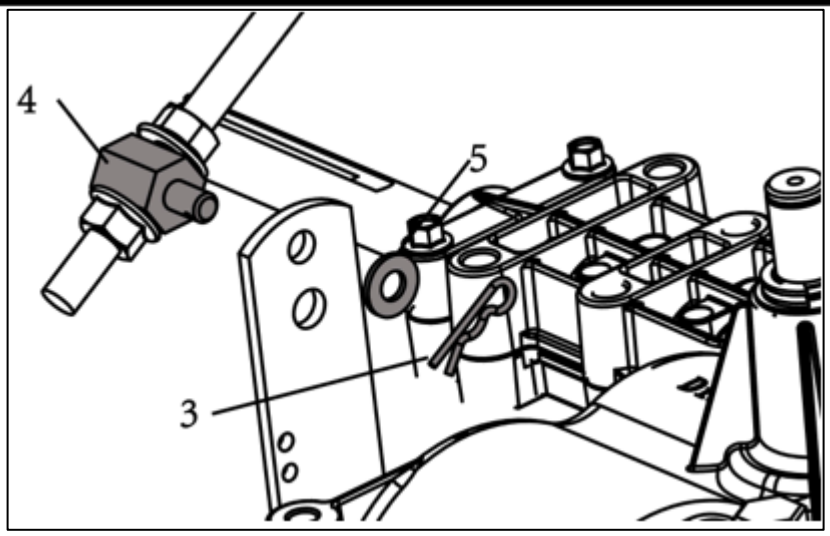

The unit is supported on the left by a bracket (6) with its screws (7) and (8) and is attached to the frame by four screws (9) with their nuts (10).

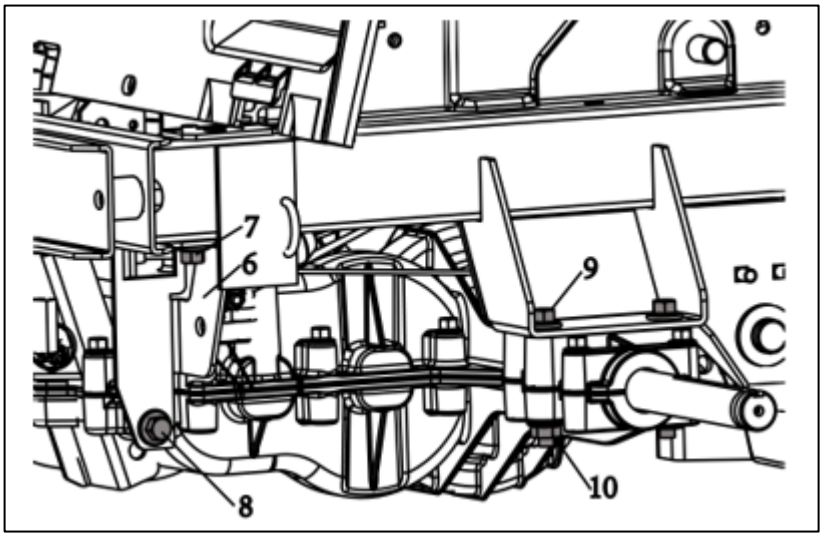

Loosen the screw (7) to give a minimum of movement to the bracket (6) and undo the two screws (9). Then carefully loosen the four nuts (10), hold up the unit so that it does not fall.

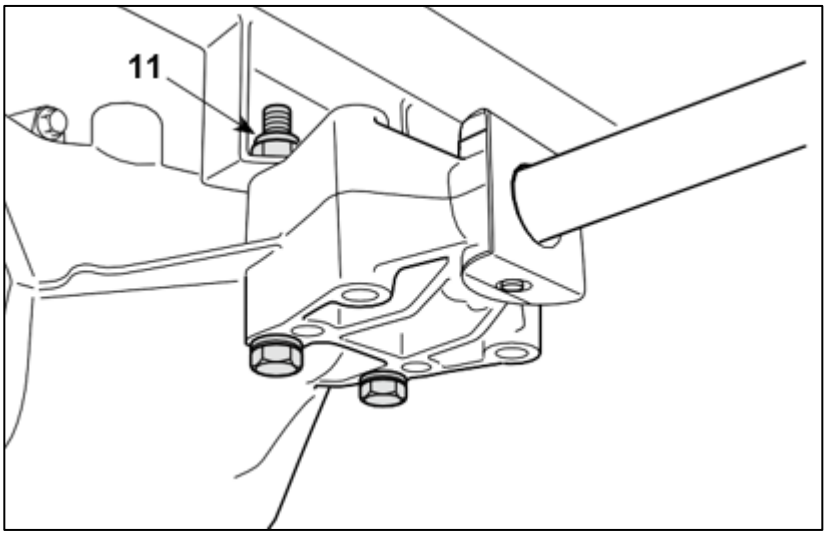

To reassemble, reverse the order of the previous operations, taking particular care with the self-tapping screw (8), which, if not screwed in correctly, could damage the threads inside so preventing it from being fastened properly.

Carefully unscrew the four frame fastener nuts (11), adequately supporting the unit so it does not fall.

To reassemble, reverse the order of the previous operations.

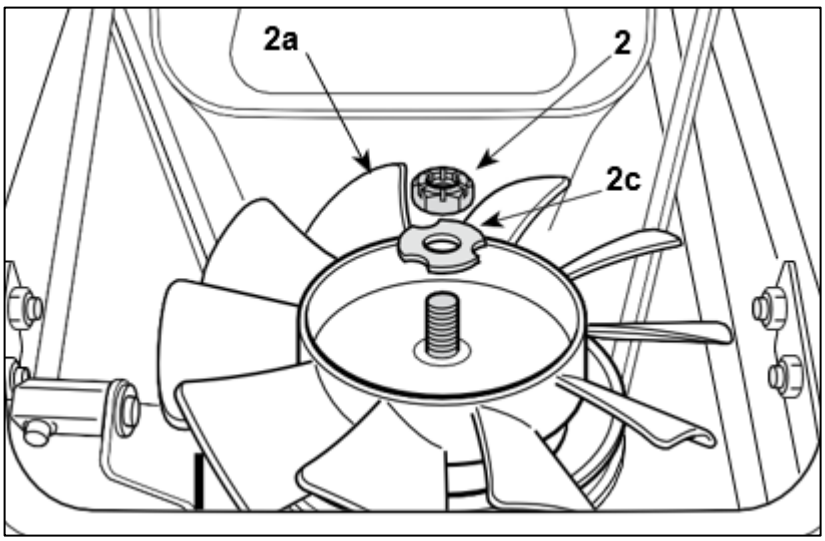

If the fan (2a) is removed, ensure the shaped washer (2c) is replaced below the nut (2).

Check that the spacers (12 - 13) are correctly fitted to the shafts, in the sequence given.

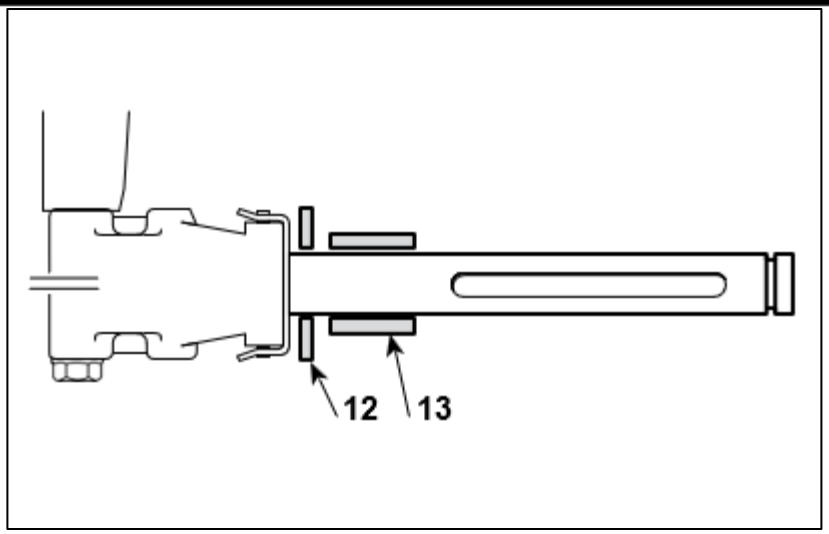

Reattach all the connections, and then …

- Refit the rear wheels.
- Reassemble the rear of the conveyor.
- Check the brake.

If the drive control rod has been replaced or completely pulled down:

- Adjust the travel and the position of “neutral” for the pedal

5.7 REMOVAL OF THE CUTTING DECK

GENERAL INFORMATION

Removing the cutting deck facilitates all the over- haul and replacement of hubs, bearings, and blade shafts.

With some practice and experience, it is possible to do this work with the deck still in position.

RELATED TOPICS

[4.5] Aligning the cutting deck

TIGHTENING TORQUES

3 Steering rod fixing nut (18/20 Nm)

- Remove the collector channel

Free the blade belt (1) from the clutch pulley (2) and set the cutting height adjustment lever to position <1>.

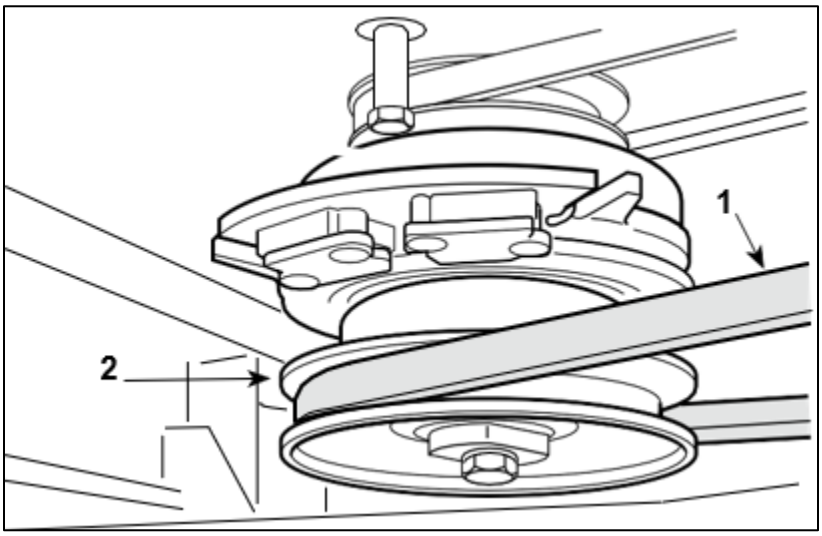

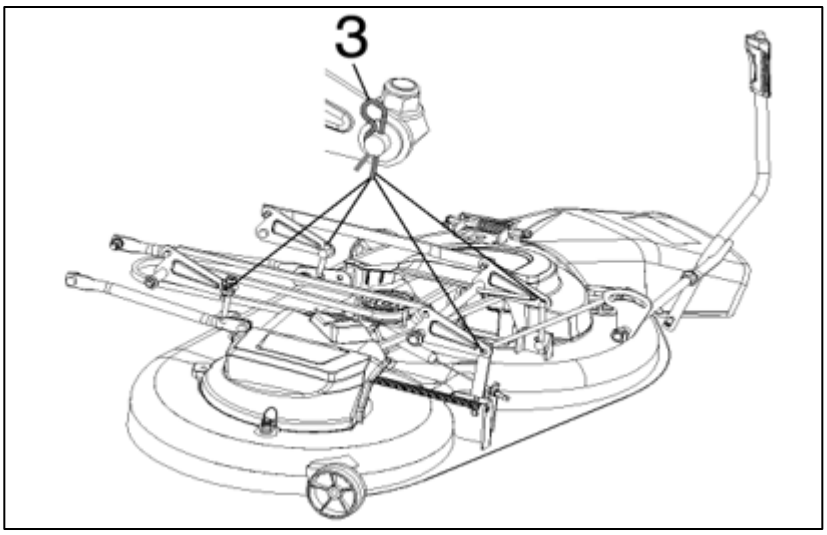

Release the three flexible split pins (3) of the lifting tie-rods.

Having checked that there is nothing in the way, the deck can be removed, turning it anticlockwise so that all the pins come out of their positions.

To assemble, perform the operations described above in reverse order, making sure to tighten the nuts (3) so as not to hinder correct cutting deck oscillation.

When assembly is completed …

- Check the alignment of the cutting deck

6. REPAIRS

6.1 REPLACEMENT OF TIRES AND WHEELS

GENERAL INFORMATION

The tires used are of the “Tubeless” type, and so every repair of a hole in the tire must be done by a tire specialist according to the methods used for this type of tire.

RELATED TOPICS

[2.3] Lifting of the machine
[4.5] Aligning the cutting deck

TIRE PRESSURES

Front
(Tires 13 x 5.00-6) 1.5 Bar
(Tires 15 x 5.00-6) 1.0 Bar
Rear
1.2 Bar

A. TIRES

After replacing one or more tires or wheels, it is always necessary to check the pressure and to check the alignment of the cutting deck.

WARNING! Replace distorted wheel rims as they could impair the tire’s hold.

B. WHEELS

The wheels are held by a snap ring (1), which can be removed with the help of a screwdriver.

NOTE: If a wheel is jammed onto the shaft, use a releasing spray, directing it around the splining hole.

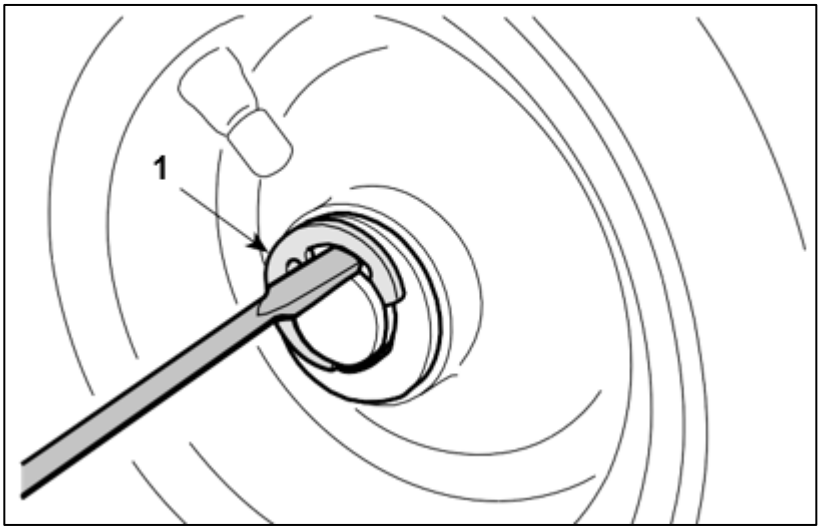

On assembly, it is advisable to spread grease on the shaft to facilitate the next wheel.

- **For the front wheels:** replace the shoulder washer (2) and the flexible ring (1) with the bevel facing inwards.
- **For the rear wheels:** replace the shoulder washer (2) and the flexible ring (1) with the bevel facing inwards and check the axial gap of the wheel on the shaft; if it is greater than 3 mm, a spacer (3) must be fitted between the wheel hub and the shoulder washer (2).

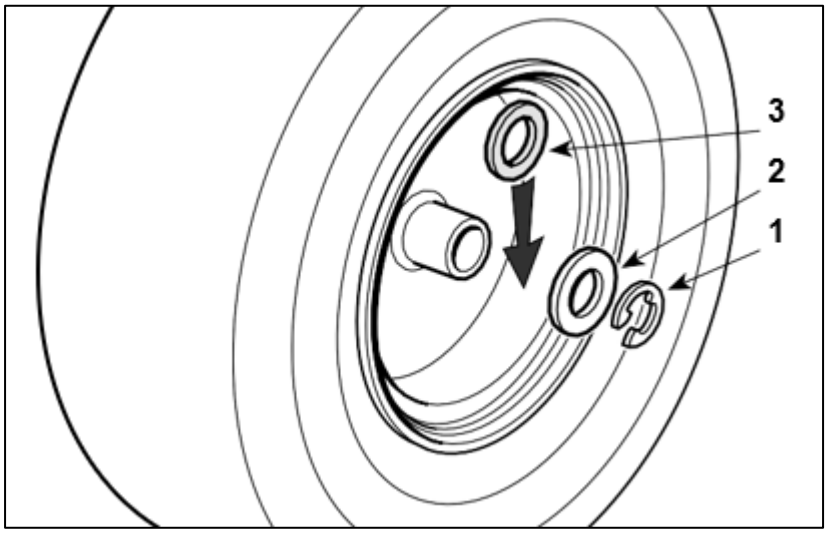

6.2 REPLACEMENT OF FRONT WHEEL BEARINGS
GENERAL INFORMATION

RELATED TOPICS
[2.2] Tools
[2.3] Lifting of the machine
[6.1] Replacement of tires and wheels

- Dismantle the front wheel.

The front wheel bearings (1) are force splined into the front wheel hub.

A 10 - 12 mm diameter round bar (2) must be used to extract a bearing, inserted from the opposite side, and struck with a hammer around various points of the inner circumference of the bearing.

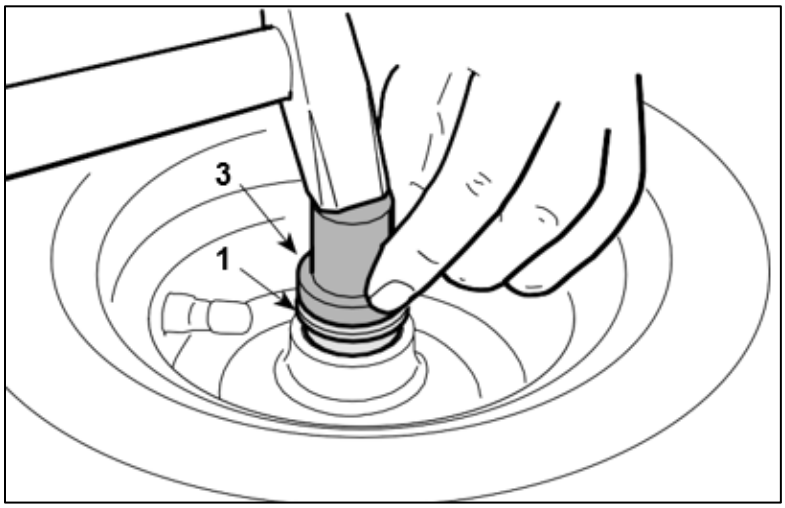

The new bearing must be fitted with the help of a plastic mallet or of a bronze pad (3) that only acts on the bearing's outer ring.

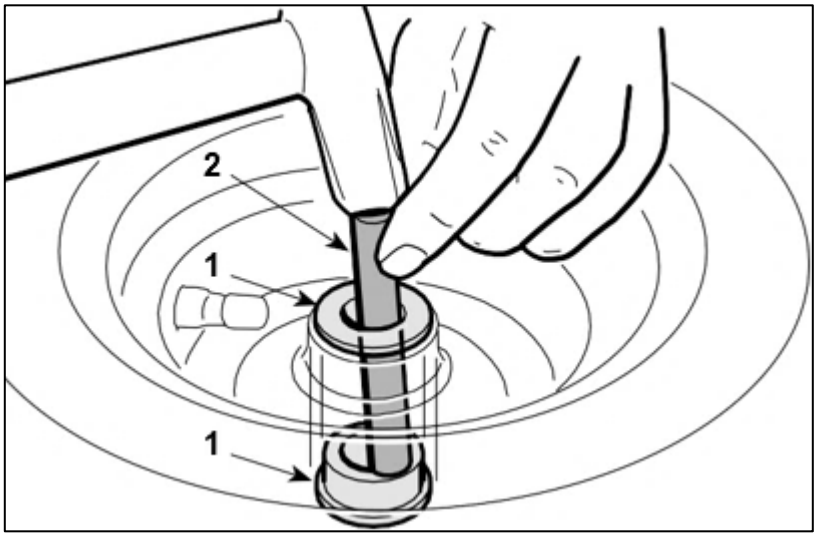

6.3 DISMANTLING OF THE STEERING COMPONENTS

GENERAL INFORMATION

RELATED TOPICS

[4.7] Steering geometry adjustment

TIGHTENING TORQUES

6 Steering tie-rod fastening nut (45 ÷ 50 Nm)
18-19 Pin fastening nuts (25 ÷ 30 Nm)

Remove the inspection hatch (1)

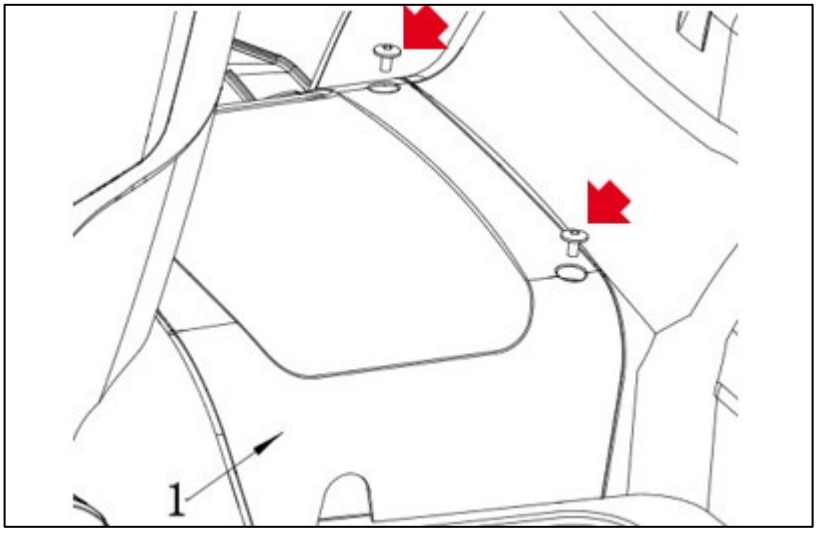

A. DISMANTLING THE STEERING PINION AND RING GEAR

Unhook the spring (2) and lift the steering column (3). Remove retaining pin (5) and pull out pinion (4)

Unscrew the nut (6) and disconnect the steering tie rod (7).

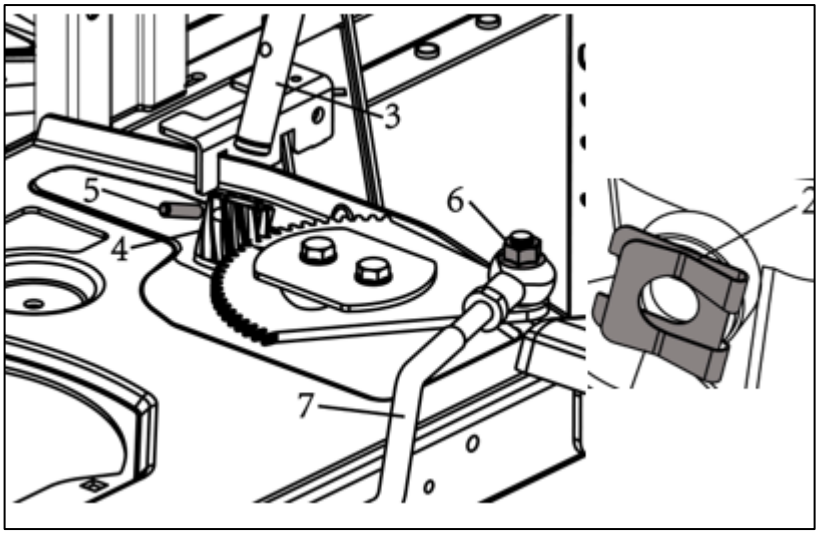

Remove the nuts (8), the guide (12), and dismantle the ring gear (10).

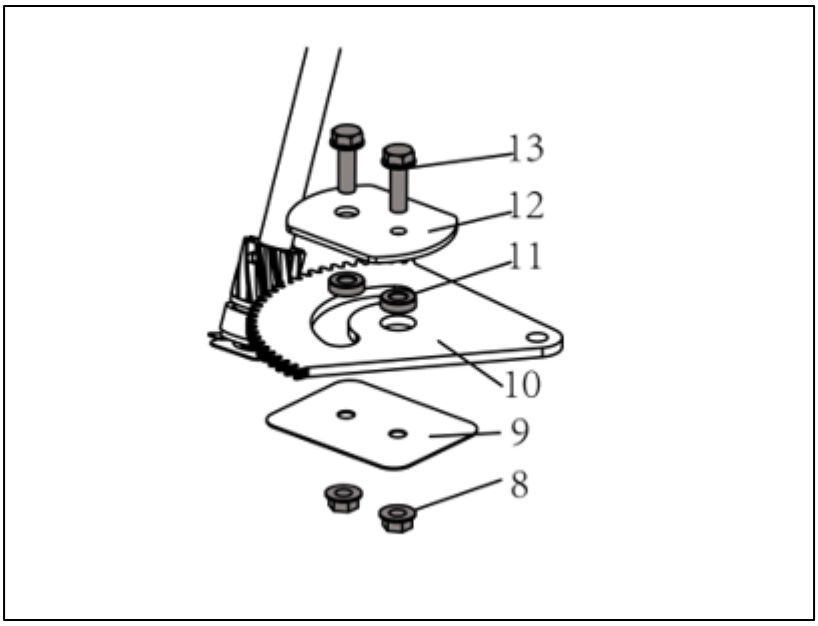

Unhook the spring (2) and lift the steering column (3). Remove retaining pin (5) and pull out pinion (4)

Unscrew the nut (6) and disconnect the steering tie rod (7).

In the case of the replacement of the ring gear and pinion, the blocks (1) that might have been placed under the ring gear previously must be removed.

To assemble, perform the operations described above in reverse order, being careful to correctly reconnect the pin (5) in the pinion housing (4).

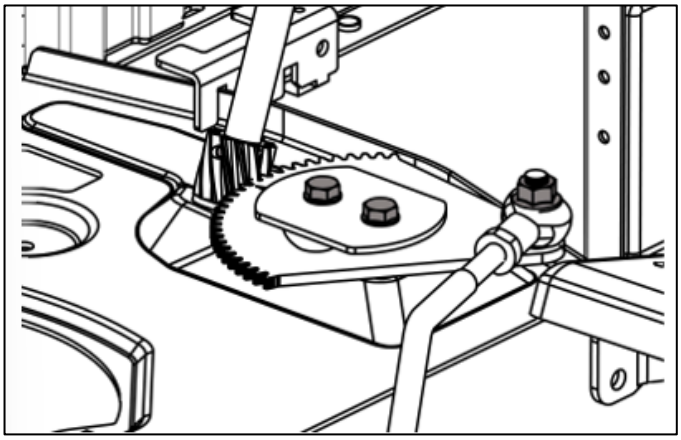

To reassemble, reverse the order of the previous operations.

- Check the steering geometry

6.4 REPLACEMENT OF THE DRIVE BELT
GENERAL INFORMATION

RELATED TOPICS
[4.3] Drive belt adjustment
[5.3] Removing the ejection conveyor
[5.5] Removal of the engine
[5.7] Removing the cutting deck
[6.9] Replacement of the brake pads
[8.2] Belts assembly

TIGHTENING TORQUES
7 Drive pulley fastening nut (25 ÷ 30 Nm)
9 Nut for pulley of the guide pulley (25 ÷ 30 Nm)
11 Nuts for small wheels (25 ÷ 30 Nm)

- Remove the rear of the conveyor.
- Removing the cutting deck.
- Remove the wire of the deck lifting lever.
- Remove the engine pulley and the clutch

Engage the parking brake to slacken off the belt and obtain greater operating convenience.

Mechanical drive models:
Loosen the two side screws (1) and (2) and move the two belt guides (3) and (4).

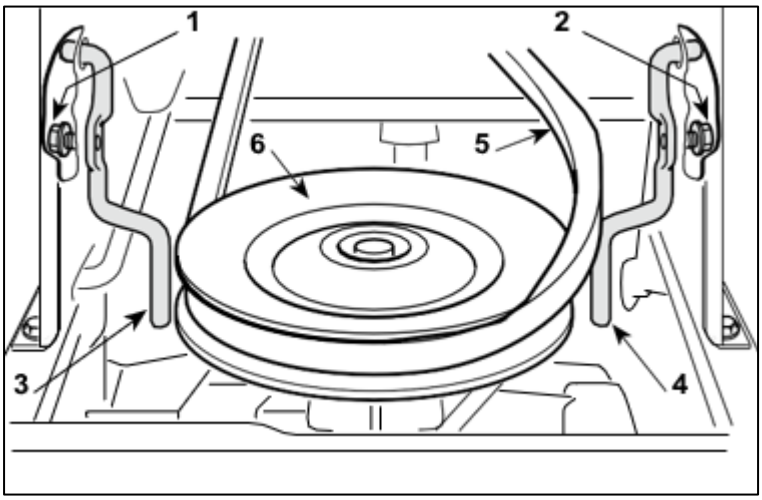

Hold the two parts of the belt (5) to release it from the pulley (6).

Loosen the nut (7) for the drive pulley (8) to the point where the passage of the belt is allowed (5).

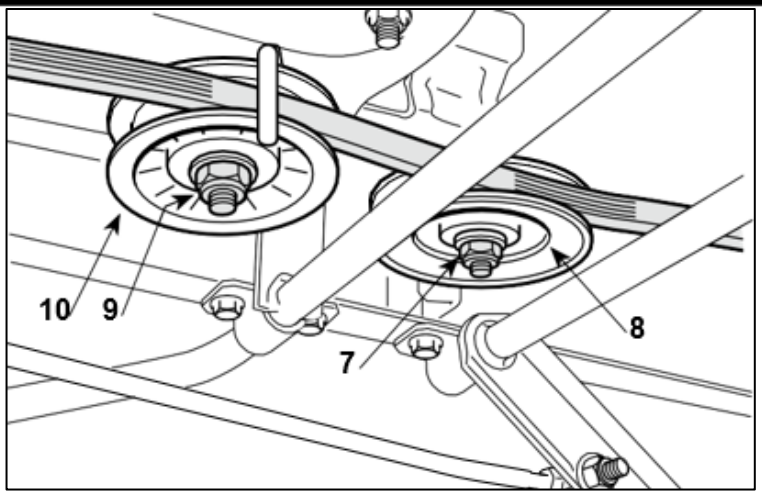

Unscrew the nut (9) and take off the pulley of the guide pulley (10).

Hold the two parts of the belt (5) to release it from the pulley (6).

Unscrew the nuts (11), remove the two small wheels (12), and remove the belt (5).

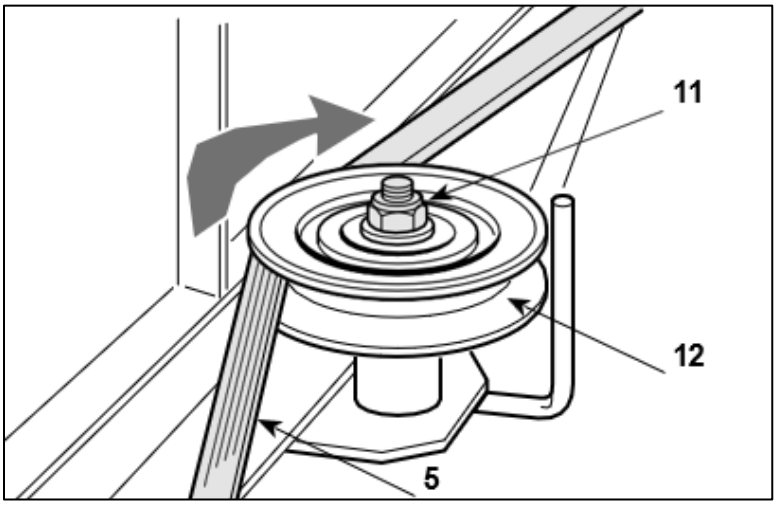

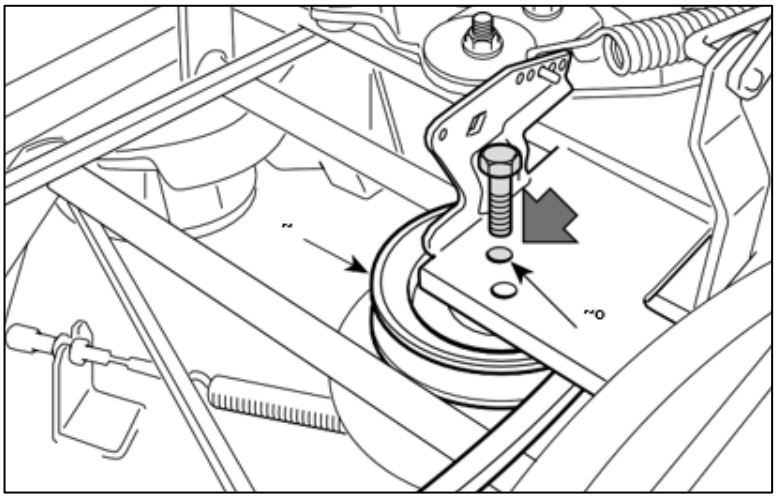

On assembly, follow the procedures described above in reverse order.

If previously removed, reassemble the pulley (8) using the hole (8a) available on the plate.

When assembly is completed

- Refit the engine pulley and the clutch.
- Adjust the drive engagement.
- Reassemble the wire of the deck lifting lever.
- Remounting the cutting deck.
- Reassemble the rear of the conveyor.

6.5 REPLACEMENT OF THE SMALL WHEELS FOR THE DRIVE BELT

GENERAL INFORMATION

RELATED TOPICS
[4.3] Drive belt adjustment

TIGHTENING TORQUES
3 Nuts for small wheels (25 ÷ 30 Nm)

Bring the cutting deck to the lowest position «1».

Engage the parking brake to slacken off the belt and obtain greater operating convenience.

Remove the inspection hatch (1).

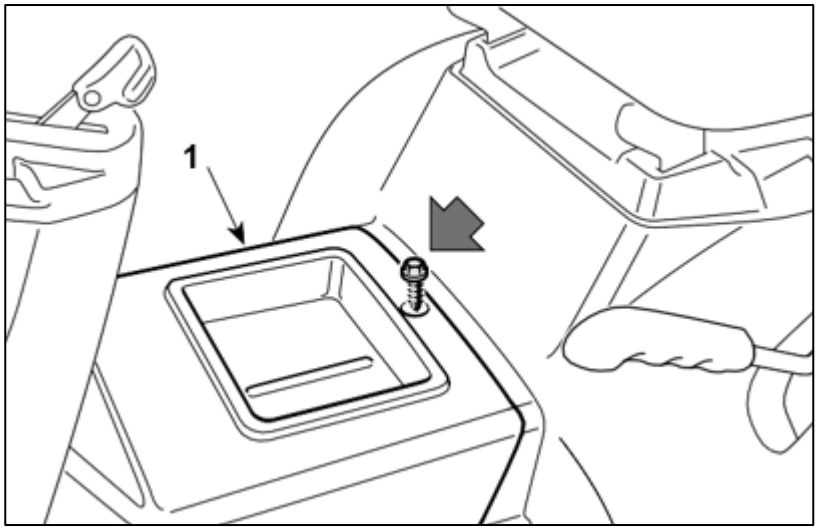

Unscrew the nuts (2) and remove the two small wheels (3) by moving them toward the rear of the machine.

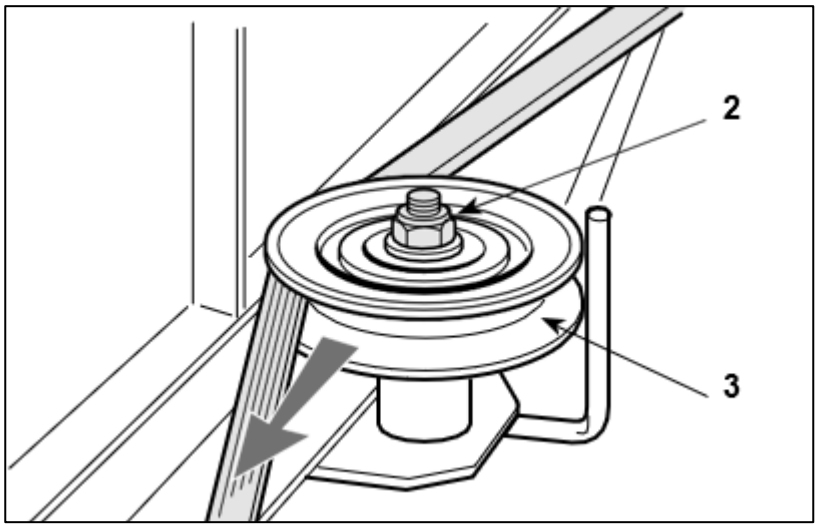

When assembly is completed

- Adjust the drive engagement.

6.6 REPLACEMENT OF THE BLADES CONTROL BELT

GENERAL INFORMATION

RELATED TOPICS

[4.1] Adjusting the engagement and checking the blade brake
[5.2] Removal of the side guards (if provided)
[8.2] Belts assembly

Remove the left and right-side guards (if provided).

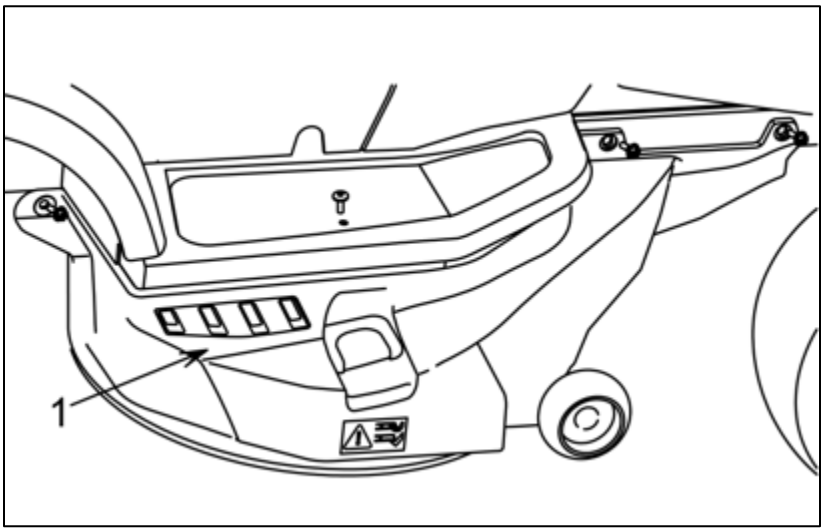

Remove the right (1) and left (2) guards.

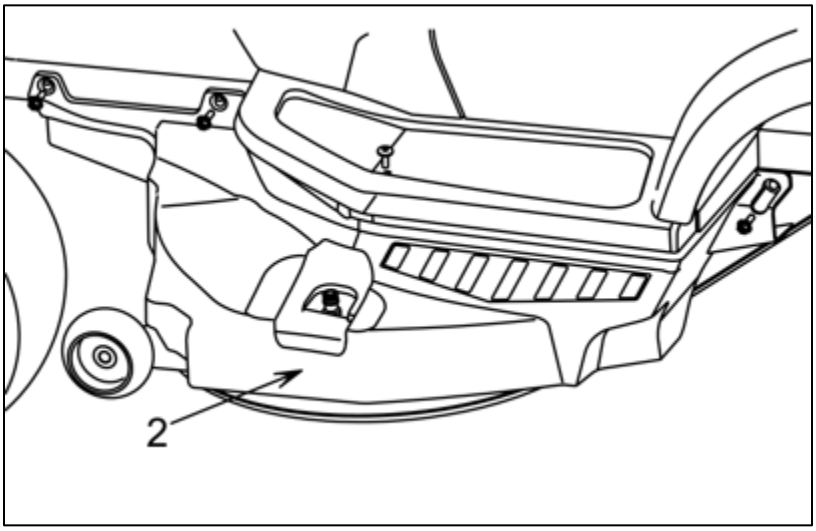

Loosen the nut (3).

Free the blade belt (4) from the clutch pulley (5).

Loosen the screw (6) and remove the drive pulley (7).

At this point, the tension regulator guide pulley (8) can be distanced manually and the belt (4) unthreaded and replaced.

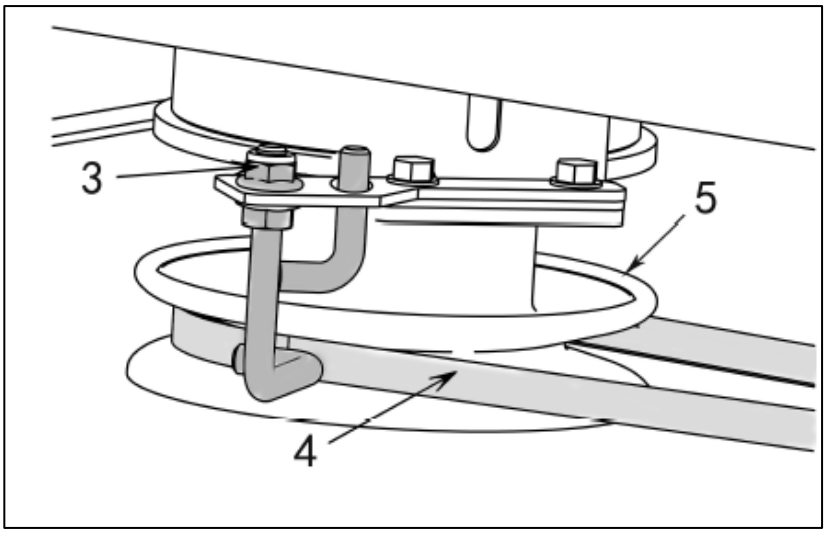

When reassembling the right (1) and left (2) guards, keep the belt (4) taut so that it is well-inserted in the pulley grooves and does not interfere with the belt guides inside the guards.

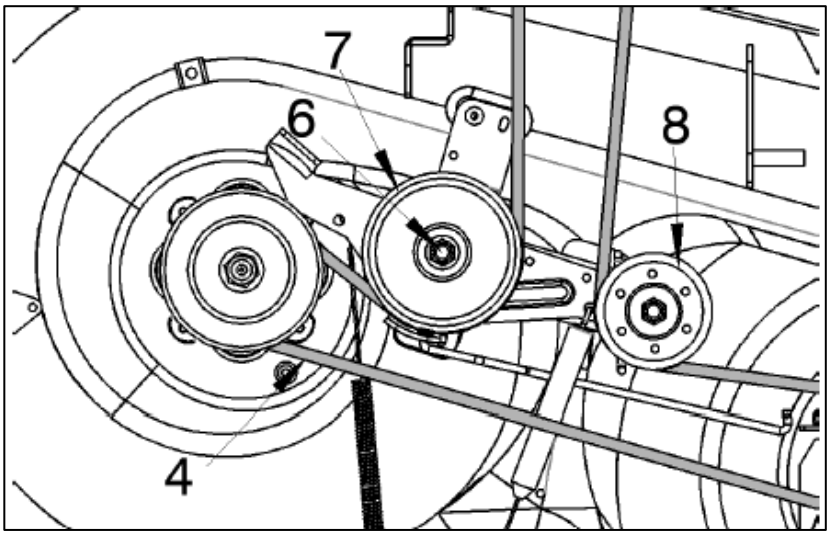

Always reassemble the safety guards.

Once assembly is completed

- Adjust the blade engagement.

6.7 REPLACEMENT OF THE SUPPORTS AND SHAFTS OF THE BLADES

GENERAL INFORMATION

RELATED TOPICS

[2.2] Special tools
[4.9] Removing, sharpening, and balancing the blades
[5.2] Removal of the side guards (if provided)
[5.7] Removal of the cutting deck

TIGHTENING TORQUES

7 Screws for pulleys fastening (20/25 Nm)
10 Flanged support fixing nuts (25/30 Nm)

- Remove the left and right-side guards (if provided).
- Remove the cutting deck.

NOTE: This operation is not strictly necessary since, with a little practice and experience, it is possible to dismantle the deck supports without removing the cutting deck.

- Remove the blades and take off the hub

Remove the right (1) and left (2) guards fixed by the relative screws and/or nuts.

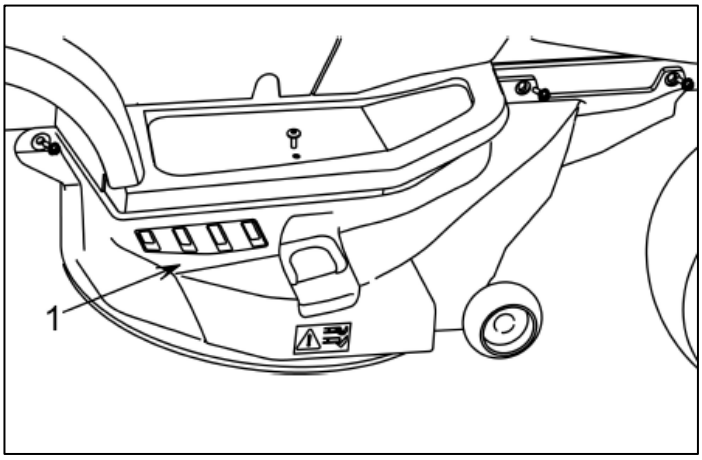

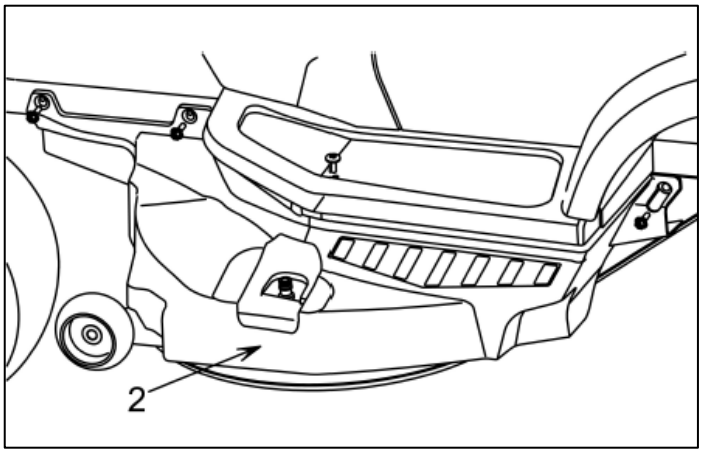

A. REPLACEMENT OF THE SUPPORTS OF THE BLADES

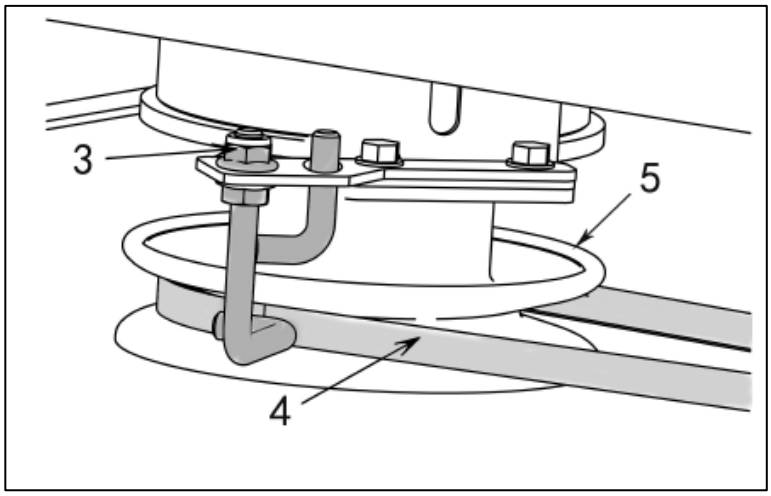

Free the blade belt (4) from the clutch pulley (5) and set the cutting height adjustment lever to position «1».

Unscrew the central screws (10) and unthread the pulleys (9).

NOTE: The removal of pulleys may be facilitated by the use of the specific pulley extractor.

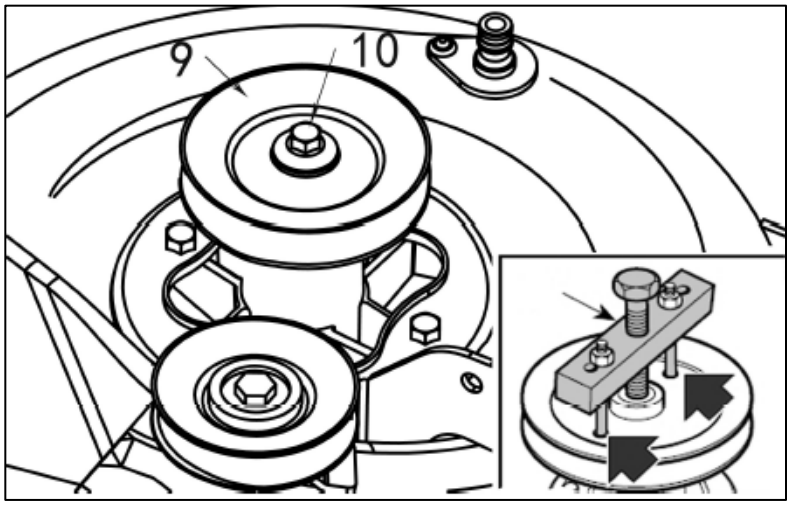

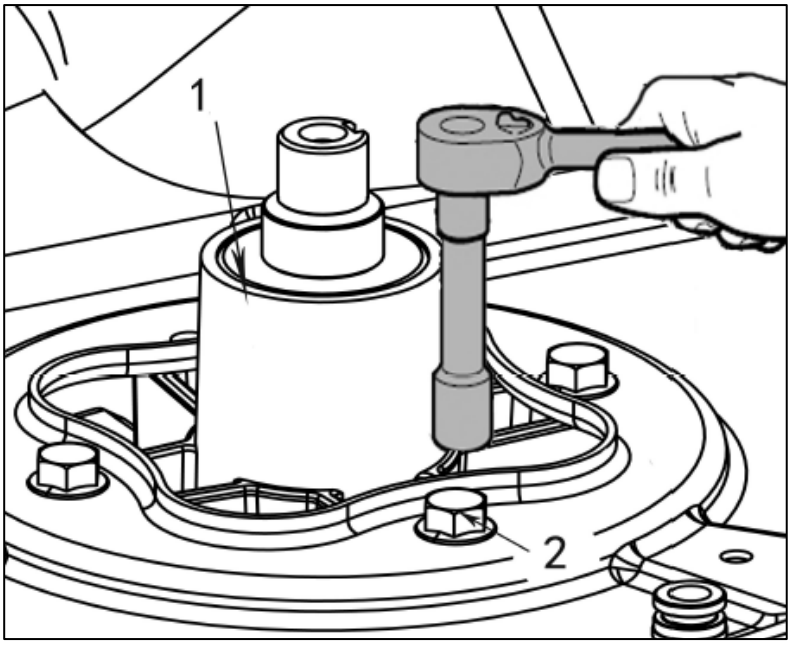

Dismantle the flange support (1) by unscrewing the three nuts (2).

NOTE - The entire support (1), including shafts and bearings, is a spare part available as a single assembly unit.

Reassemble the supports (1) on the cutting deck, making sure you don't invert the right with the left.

On completion of assembly of the supports, ...

Remove the key (3) and hit the shaft with a plastic mallet on the blade side to remove the shaft.

- Reassemble the hubs and start sharpening, balancing, and assembling the blades.

- Reassemble the cutting deck.
- Always reassemble the safety guards.

B. REPLACEMENT OF THE BEARINGS AND THE SHAFTS OF THE BLADES

Remove the key (3) and hit the shaft with a plastic mallet on the blade side in order to remove the shaft.

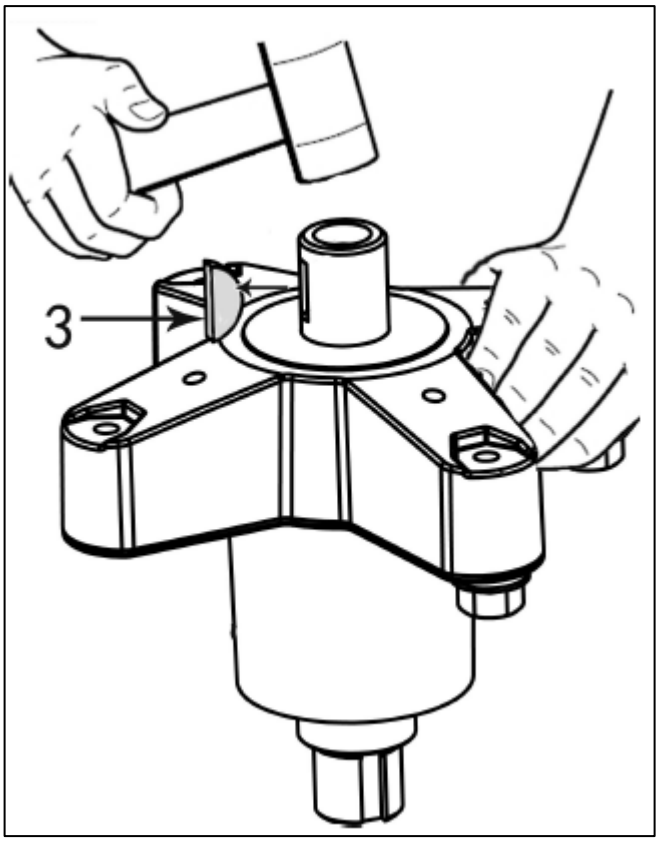

The bearing still in place must be removed by hitting it from the inside of the flange. First, using a 16 mm diameter cupreous round bar (3), hitting the lining (4)

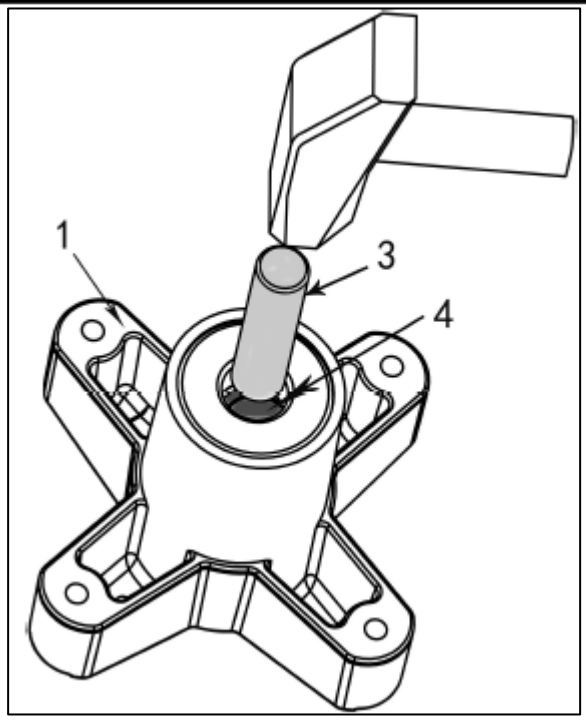

The second bearing, still in place, must be removed by hitting it from the inside of the flange using a 16 mm diameter round bar.

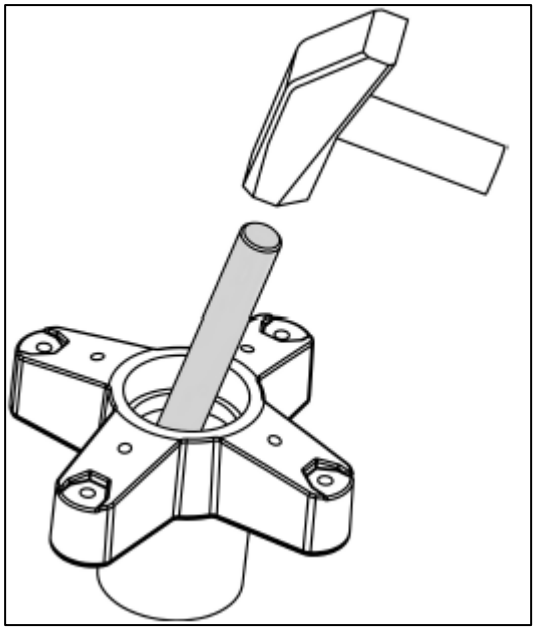

IMPORTANT: The right and left shafts seem to be the same, but can be differentiated as follows:

- right shaft: shaft end marked "L" on the blade side.

Before refitting the support assembly, check that these positions are correct.

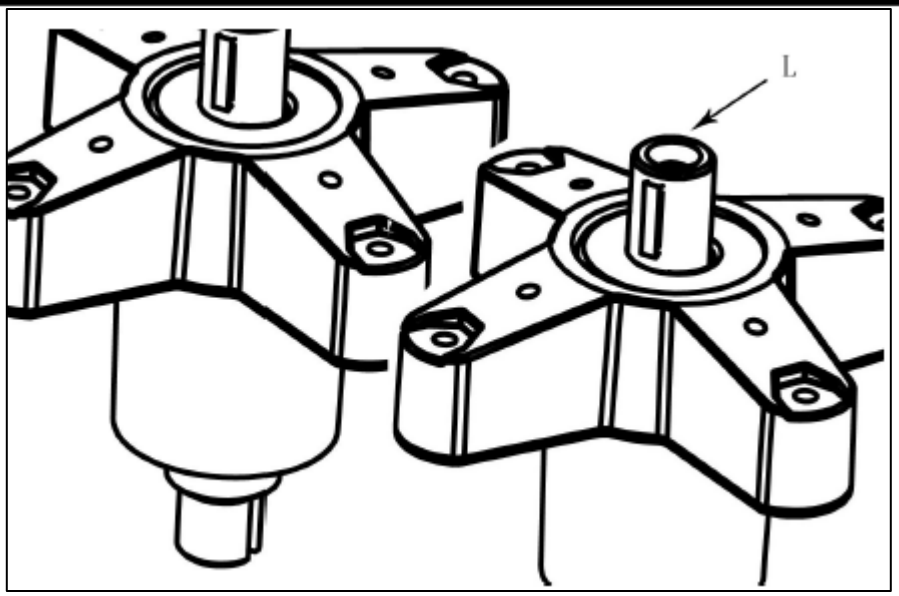

Fit the flange supports onto the deck, fully tightening the nuts (2).

6.8 REPLACEMENT OF THE ACCELERATOR AND ADJUSTMENT OF THE CARBURETOR

GENERAL INFORMATION

RELATED TOPICS

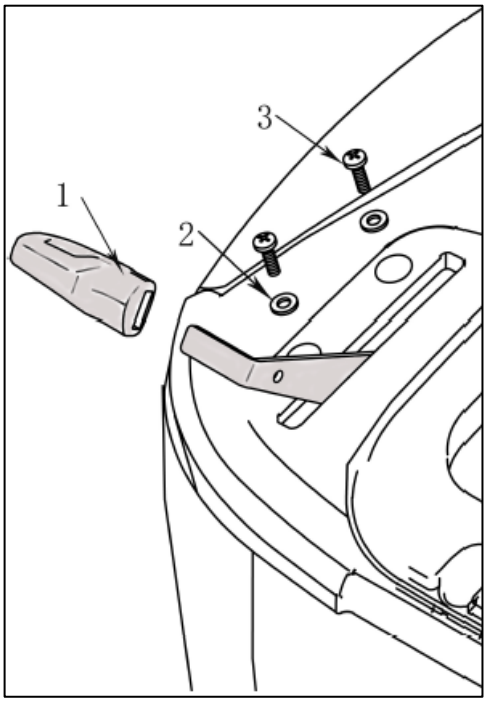

Take off the knob (1) and undo the two screws (3) and the washer (2) that hold the accelerator on the dashboard.

From the motor side, loosen the terminal screw (4), disconnect the wire (6) terminal (5) from the slider (7), and remove the accelerator with the wire.

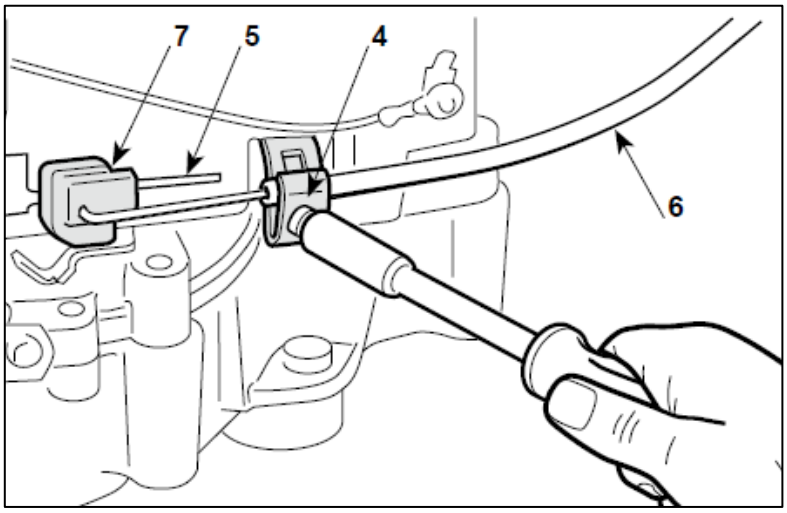

To assemble, put the accelerator lever in «MIN» and connect the wire (6) terminal (5) to the slider (7).

Take off the knob (1) and undo the two screws (3) and the washer (2) that hold the accelerator on the dashboard.

From the motor side, loosen the terminal screw (4), disconnect the wire (6) terminal (5) from the slider (7), and remove the accelerator with the wire.

Move the slider (7) to the specific «MIN» position for each type of motor as indicated in the relevant instruction booklet. Then secure the wire (6) to the terminal (4).

6.9 REPLACEMENT OF THE BRAKE PADS

GENERAL INFORMATION

RELATED TOPICS

[2.3] Lifting of the machine
[4.2] Brake adjustment
[6.1] Removal of the wheels

mechanical drive models only

- Remove the left-hand rear wheel.

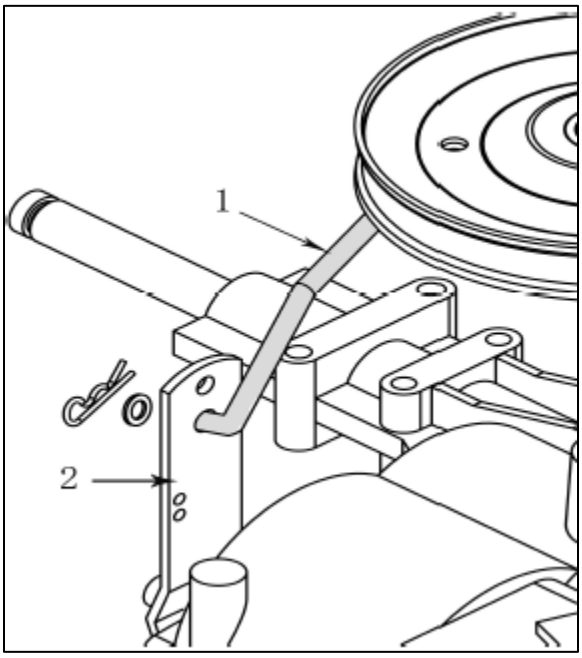

Disconnect the control rod (1) from the lever (2) and undo the two screws (3) that hold the support (4).

NOTE: During all these operations, it is better not to unscrew or loosen the central screw (9) to avoid altering the calibration of the cam driving the pistons. If it has been moved, the lever's free movement will have to be checked.

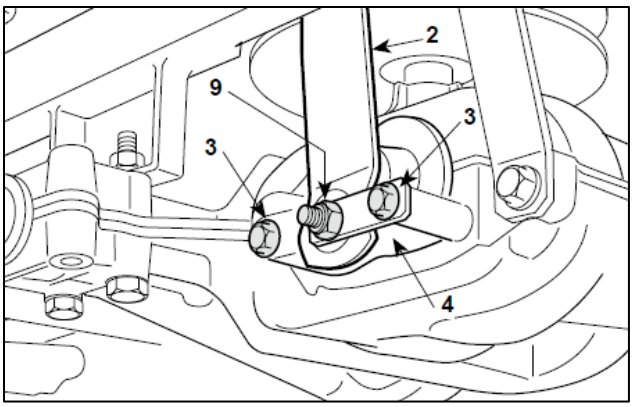

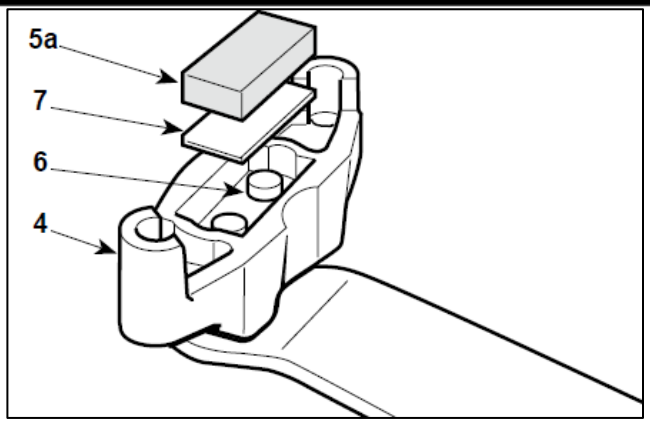

The support (4) contains a pad (5a) separated from the control pistons (6) by a plate (7).
The other pad (5b) can be reached by taking off the disc (8).

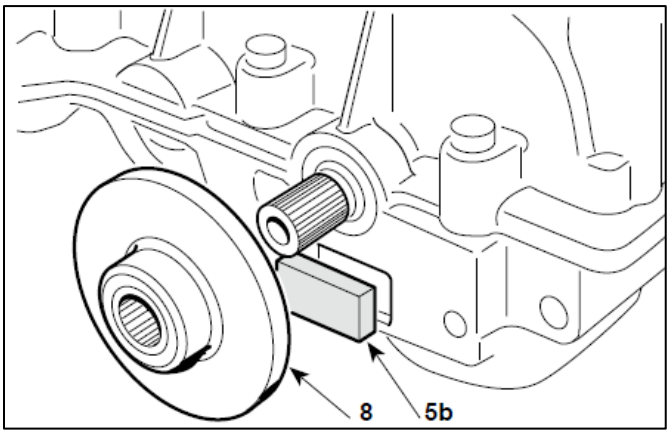

If there is oil on the pads, clean with solvent and go over them with fine-grade abrasive paper.

Both pads should be replaced if the depth of either of them is less than 5 mm.

Renew the disc if it is damaged, distorted, or less than 4 mm thick.

On reassembly, carefully reposition all the components and refit the complete support.

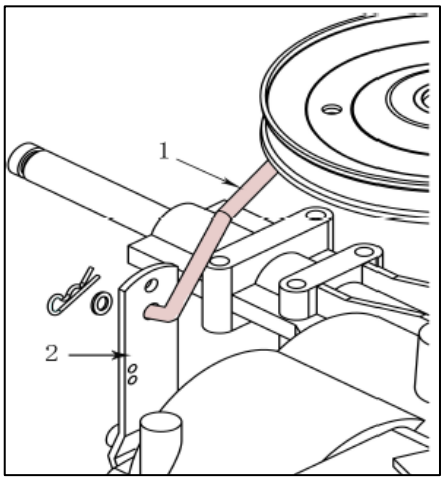

When connecting the rod (1), be sure to use the uppermost hole in the lever (2) and replace the washer (10).

When fully reassembled

- Check the brake adjustment.

7. ELECTRICAL SYSTEM

7.1 TROUBLESHOOTING OF THE ELECTRICAL SYSTEM

GENERAL INFORMATION

In the following, some of the problems connected to the malfunctioning of the electrical system are shown, with their probable cause and the remedial action to be taken.
Should the problem continue after the appropriate checks, seek assistance from your local Service Center.

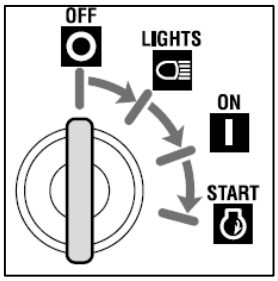

RELATED TOPICS

[7.2] Cutting in of the safety devices
[7.3] Recharge circuit check
[7.4] Maintenance of the sealed battery

PROBLEM	CAUSE	REMEDY
1. Activation of self-resetting protection 1)		
A. on inserting the key in position «ON»	Battery terminal crossed	Check the battery connections
	Short circuit to earth	Check the connectors and wiring of the microswitches
B. in position «START» or after a few seconds of use, following an attempt at starting with outside means:	Sulphated battery (it no longer accepts recharging)	Replace the battery
	Faulty or wet electronic card	Check and dry with low-pressure tepid air (hairdryer)
	Battery terminals are corroded or with poor contact	Check and clean the connections
C. after several minutes' use:	Poor or missing earth contact on the charge regulator	Check the earth connections and the screws fastening the regulator
	Overvoltage from a malfunction in the regulator	Check the recharge circuit
	Battery disconnected or faulty during use	Check the battery or wiring
2. With the key in the «ON» position, the pilot lamp remains off	The battery is not supplying the card	Check the connection cables
		Check the battery's condition.
	The battery or card is not earthed to the frame	Check and put it right

	10 A fuse has blown	Replace fuse (10 A)
	Battery terminal crossed	Check connections

PROBLEM	CAUSE	REMEDY
3. With the key in the «START» position, the starter motor does not turn or lacks power (poor starting)	The battery is not supplying sufficient current	Recharge the battery
	Badly earthed battery, or the starter relay, or the engine not earthed	Check and put it right
	The starter relay is faulty.	Check that the starter relay is activated.
4. The key is in the «START» position, and the starter motor does not turn	Starting not permitted	After checking that the conditions are met, check all the micros- witches and the relative wiring.
5. The starter turns, but the engine does not start	No fuel flow	Check the leads for the carburetor solenoid valve opening control (if provided) or check the fuel stopcock and filter.
	Impaired starter system	Check that the spark plug cap is positioned correctly.
		Check that the spark plug electrodes are clean and have the correct gap.
6. The starter continues to turn after the engine has started, and does not stop when the key is removed	Mechanical difficulties with the contact breakers of the starter relay	Replace the starter relay
	The starter works erratically for mechanical or electrical reasons, taking excessive current and causing binding of relay contacts.	Check the starter
7. The starter operates as soon as the key is in the «ON» position, and can be turned off only by removing the key	Starter block operating faults	Replace the block
8. The pilot lamp becomes weak after several hours' work, and the engine goes off	Insufficient charge	Check that the charging cable has not detached
		Check that there are no current leakages caused by cables with damaged insulation.
		Check the recharge circuit.
	Charger fuse blown	Replace the fuse (20 A) and check the recharge circuit.

PROBLEM	CAUSE	REMEDY
9. The engine stops while in use for reasons not due to the safety devices cutting in	The safety devices have cut in or are faulty	Check the operation of the microswitch and the relevant wiring
	Accidental detaching of an electrical wire	Check all wiring
	Starting of engine is not permitted.	After checking that the conditions are met, check all the microswitches and the relative wiring.
10. The fuse cuts in	Short circuit or overload on the power side (ignition block, starter relay, headlamps, and recharger connector)	Find and replace the defective user.
11. No audible signal for the "grass-catcher full" condition	Malfunctioning or faulty blade switch or microswitch, and grass-catcher signaling	Check the switch, the microswitch, and the wiring. **WARNING! - Check that the blade switch stops the engine or prevents it from being started if the acknowledgement conditions are not met**

7.2 CUTTING IN OF THE SAFETY DEVICES
GENERAL INFORMATION

RELATED TOPICS

This table shows the various situations in which the safety devices intervene.

A. STARTING

The engine does not start when

Operator	–/–	–/–	Absent
Grass-Catcher	–/–	–/–	–/–
Blades	–/–	Engaged	–/–
Drive	Engaged	–/–	–/–
Parking	–/–	–/–	–/–

B. WHILE CUTTING

The engine STOPS when

Operator	Absent	Absent	Absent	–/–	–/–	Seated
Grass-Catcher	–/–	–/–	–/–	Missing	–/–	Fitted
Blades	–/–	Engaged	–/–	Engaged	Engaged	Engaged
Drive	Engaged	–/–	–/–	–/–	–/–	Reverse
Consent Button	–/–	–/–	–/–	–/–	–/–	Released
Parking	–/–	–/–	–/–	–/–	Engaged	–/–

–/– Irrelevant condition for the triggering of safety devices

= Pilot lamp on = Pilot lamp flashing

7.3 RECHARGE CIRCUIT CHECK

GENERAL INFORMATION

RELATED TOPICS

The job of the voltage regulator is to supply a flow of current to the battery at a constant voltage of about 14 -15 Volts, cutting in every time that the voltage from the generator exceeds this threshold.

A faulty regulator may recharge the battery insufficiently (therefore needing frequent recharging) or, otherwise, may supply overloading that causes the self-resetting protection to cut in.

Before checking the recharge circuit, make sure that:

- All connections are correct.
- The earth connections are firmly connected, especially the earth connection to the regulator.
- The battery is charged and not sulphated.
- The charger fuse is not blown.

A. CHECKING THE LOWER CHARGING LIMIT

Start the engine and keep running at a minimum with the headlights on.

With the voltmeter tester, measure the voltage at the battery terminals. If the value does not rise but tends to fall, even slowly, it means that the regulator is not charging sufficiently and must be replaced.

If the voltmeter shows no value, it means that the charger fuse is blown.

B. CHECKING THE UPPER CHARGING LIMIT

Start the engine and take it to maximum speed. With the tester in the voltmeter function, measure the voltage at the battery terminals. The amount should slowly rise and settle at 14-15 Volts after about 10-15 minutes.

If this value is exceeded to the extent that the engine stops due to the self-resetting protection cutting in (at approximately 16 Volts), it means that the regulator is charging too much and must be replaced.

7.4 MAINTENANCE OF THE SEALED BATTERY
GENERAL INFORMATION

RELATED TOPICS

A. GENERAL INFORMATION

In a sealed “dual” battery, the electrolyte for each element is carefully measured out during manufacture and sealed at source, in order to ensure maximum performance during the battery’s entire life.

With a battery of this type, it is not necessary to add water or acid, and the cover must never be opened or removed.

B. RECOMMENDATIONS FOR CORRECT USE

To keep the battery performing at optimum levels and to increase its life, various precautions should be taken:

- always keep the battery fully charged.
- always recharge a flat battery within 1 month, otherwise the elements could be damaged and no longer able to take a charge (sulphated);
- always recharge the battery before and after periods of prolonged inactivity or storage.

IMPORTANT! Only recharge with a constant voltage battery charger. Use of other types of battery chargers could damage the battery.

C. RULES FOR RECHARGING THE BATTERY

IMPORTANT! Recharging is a particularly important operation for the life of the battery and must be carried out according to these instructions:

- Do not recharge the battery when its case is broken or damaged.
- carefully read the instructions for using the battery charger and the battery.
- Use a suitable battery charger.
- recharge at a room temperature of between +10 and +30 °C.
- check that the battery does not heat beyond 50 °C while recharging. If it should do so, stop recharging immediately and dispose of the battery since it will be unusable.

With the battery disconnected (and resting for at least 12 hours) and the tester in voltmeter function, measure the voltage between the terminals. The amount given (open circuit voltage) indicates the operations to be carried out, as per the following table:

Battery voltage with open circuit	Battery state	Operation to be carried out
> 12.6 Volt	Fully charged	None
< 12,4 Volt	Flat	Recharge

Check the battery voltage at least 12-24 hours after recharging.

7.5 FITTING SAFETY MICROSWITCHES

GENERAL INFORMATION

RELATED TOPICS

IMPORTANT! If the microswitches are to function correctly, it is important to follow the exact assembly positions by referring to the drawings that indicate the various usages of each type.

A = Free
B = Activated

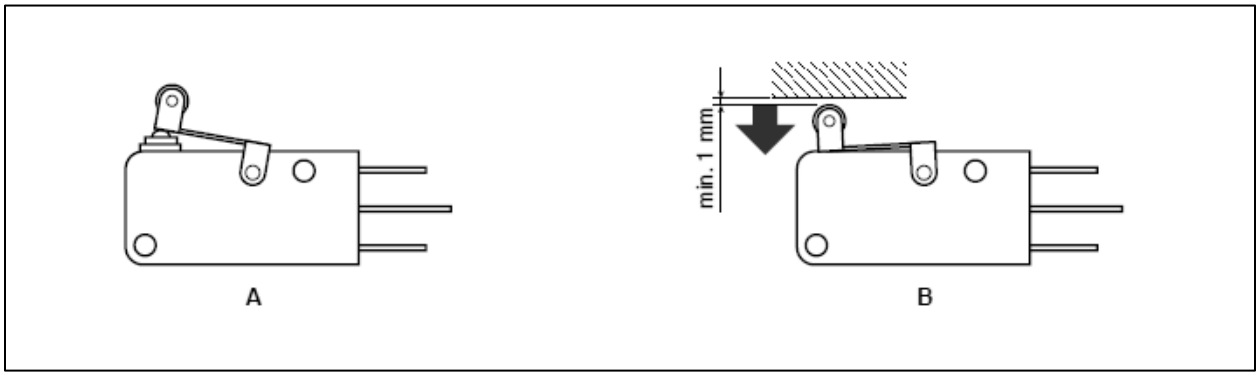

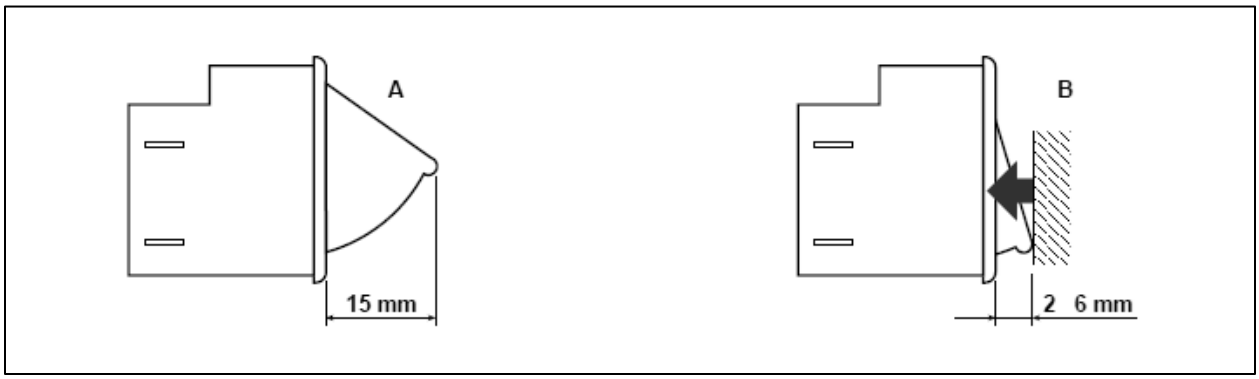

7.6 ELECTRICAL DIAGRAMS

GENERAL INFORMATION

RELATED TOPICS

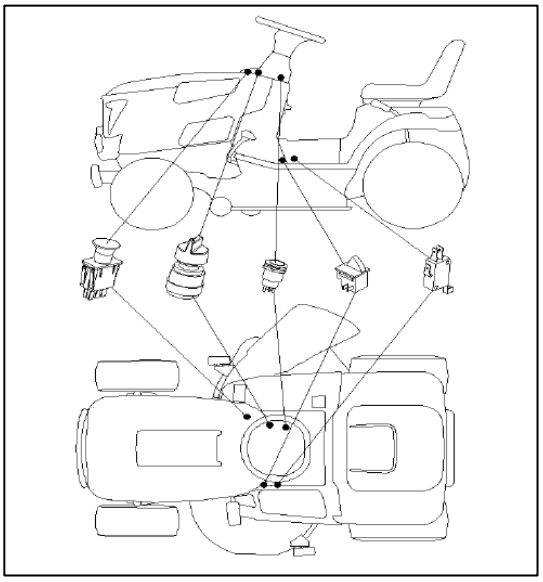

PRORUN

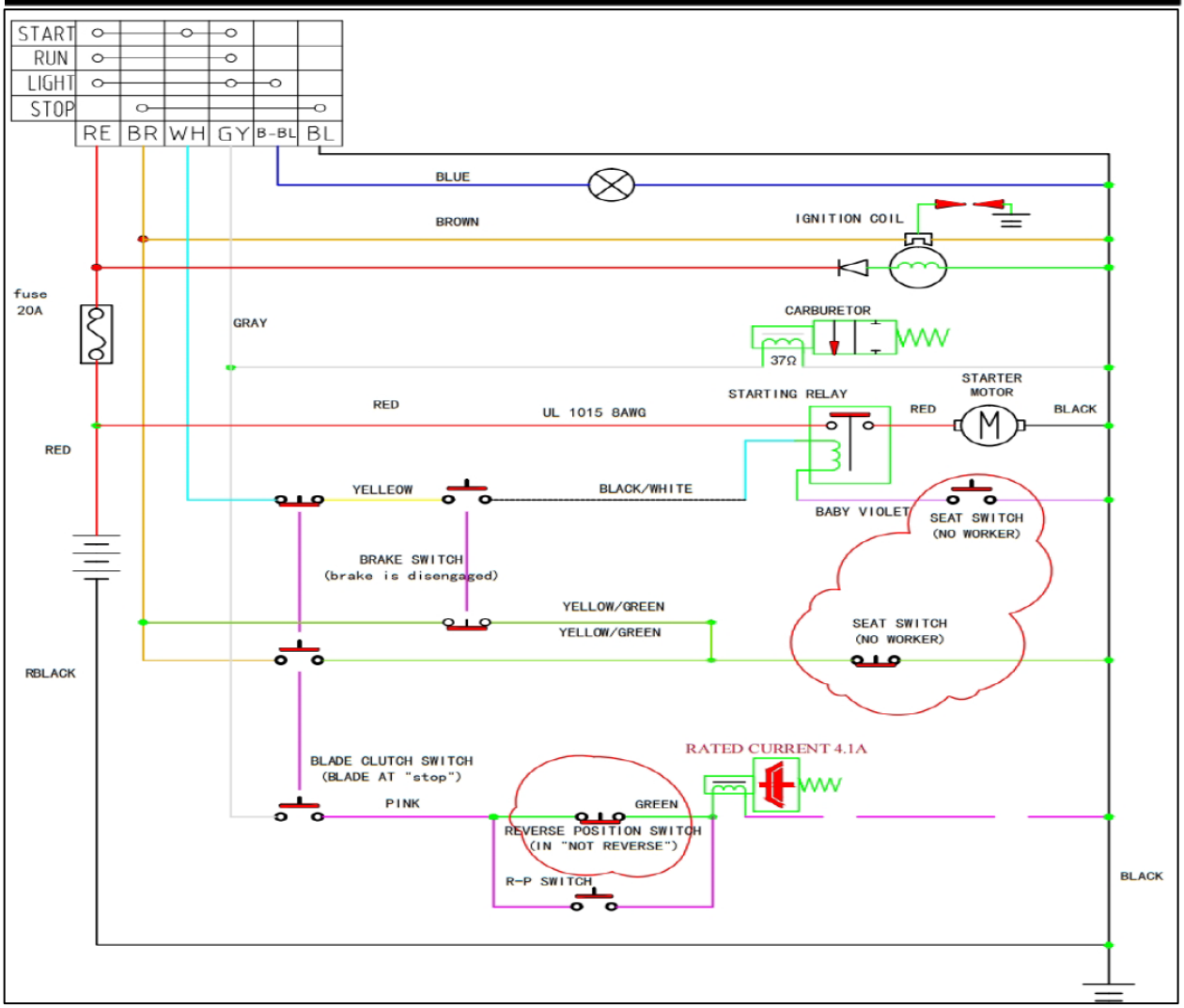
START
RUN
LIGHT
STOP
RE
BR
WH
GY
B-BL
BL
BLUE
BROWN
IGNITION COIL
fuse
20A
GRAY
CARBURETOR
37Ω
STARTER
MOTOR
STARTING RELAY
RED
UL 1015 8AWG
RED
BLACK
RED
YELLEOW
BLACK/WHITE
BABY VIOLET
SEAT SWITCH
(NO WORKER)
BRAKE SWITCH
(brake is disengaged)
YELLOW/GREEN
YELLOW/GREEN
SEAT SWITCH
(NO WORKER)
RBLACK
RATED CURRENT 4.1A
BLADE CLUTCH SWITCH
(BLADE AT "stop")
PINK
GREEN
REVERSE POSITION SWITCH
(IN "NOT REVERSE")
R-P SWITCH
BLACK

8. TECHNICAL SPECIFICATIONS

8.1 TIGHTENING TORQUES AND ADJUSTMENTS SUMMARY

GENERAL INFORMATION

RELATED TOPICS

[4.1] Adjusting the engagement and checking the blade brake
[4.2] Brake adjustment
[4.3] Drive belt adjustment

A. TIGHTENING TORQUES

Below is the specified tightening torque for the fixing bolts on the main parts.

1 Screws for engine fastening (35 ÷ 40 Nm)
2 Screw for engine pulley (45 ÷ 50 Nm)
3 Screws for rear axle fastening (25 ÷ 30 Nm)
4 Blade pulley screws (25 ÷ 30 Nm)
5 Flanged support fixing nuts (25 ÷ 30 Nm)
6 Screw for blade (45 ÷ 50 Nm)

Every section in this manual gives value for all the components involved in each operation.

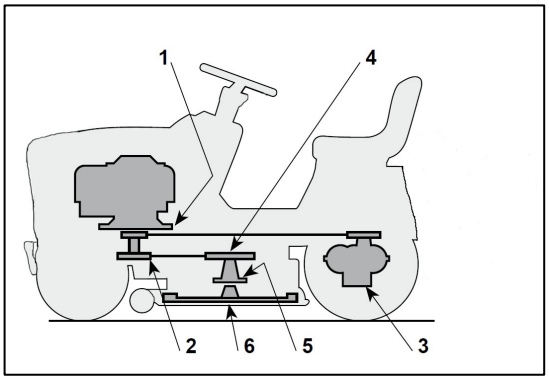

B. ADJUSTMENTS

OPERATION	POSITION	POSITION OF CONTROLS	ADJUSTMENTS
A. Brake Adjustment	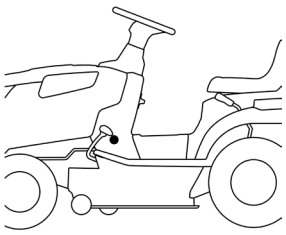	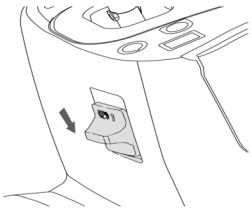	53 – 55mm (Peerless) 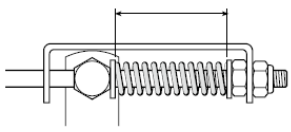

B. Adjust the engagement and check the blade brake	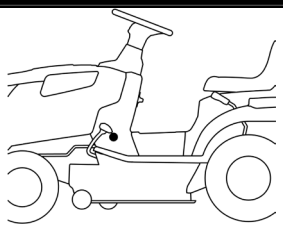	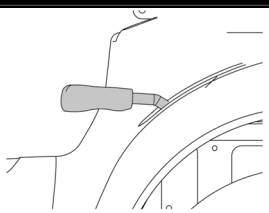	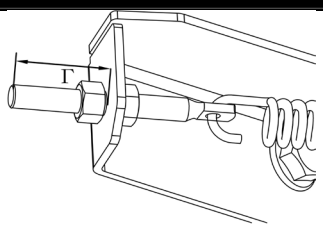 86 L=35mm./92 L=45mm 102 L=60mm

8.2 BELTS ASSEMBLY
GENERAL INFORMATION

RELATED TOPICS

[6.4] Replacement of the drive belt
[6.6] Replacement of the blades' control belt

Mechanical drive models

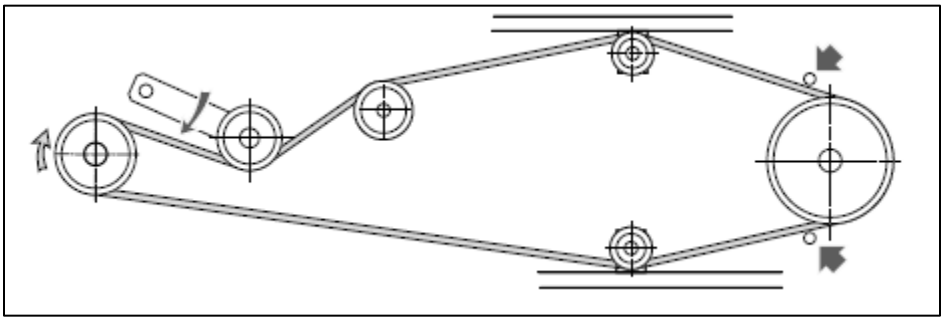

Hydrostatic drive models

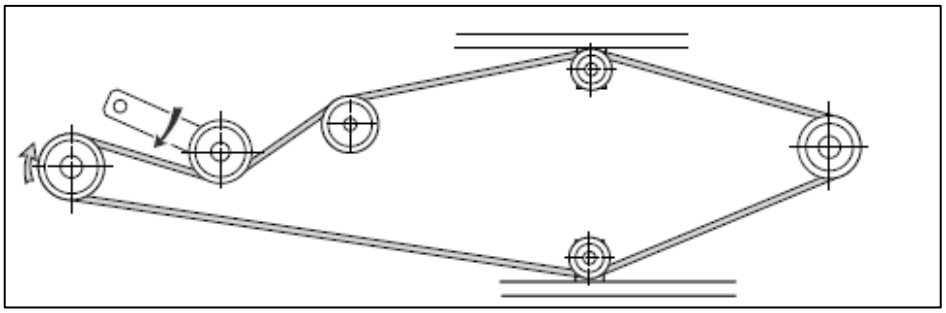

1. Drive belt development
2. Blades control belt development

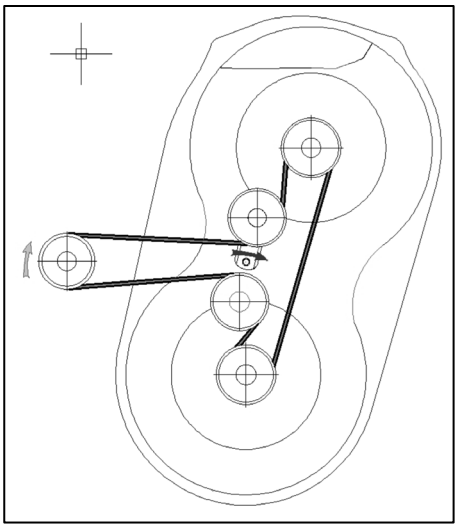

PRORUN regularly improves our products, and you may find slight differences between your machine and the descriptions contained within this operator's manual. Modifications can be made to the machine without notice and without the obligation to update the manual, provided that the essential safety and functional characteristics remain unaltered. Contact PRORUN Customer Service with any questions and for current specifications.

PRORUN / TOPSUN USA
10130 Perimeter Parkway
Suite 140
Charlotte, NC 28216
Customer Service: (844) 905-0882 Email: info@proruntech.com Website: www.proruntools.com

Zhejiang Zhongjian Technology Co., Ltd Web: www.topsunpower.cc
E-mail: sales@topsunpower.cc
ADD: No.155 Mingyuan North AVE, Economic Development Zone, Yongkang, Zhejiang, 321300, P.R. CHINA
Made in China