Form No. 3429-802 Rev A

TORO®

Count on it.

Operator's Manual

SGR-6 Stump Grinder

Model No. 22600—Serial No. 404320000 and Up

Model No. 22600HD—Serial No. 404320000 and Up

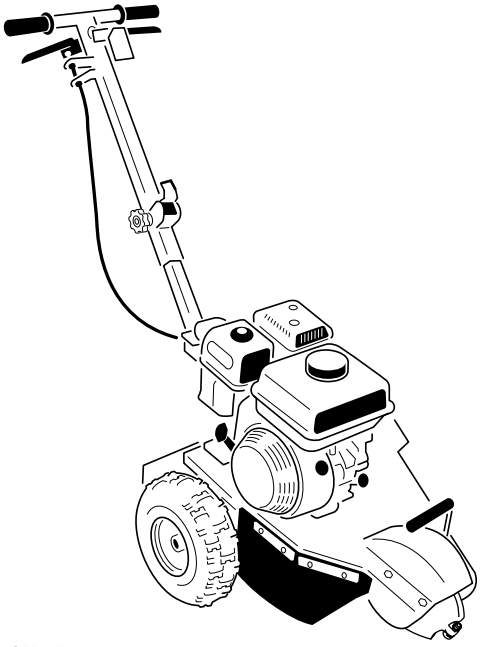

G025787

Register at www.Toro.com.
Original Instructions (EN)

3429-802 A

⚠ DANGER

There may be buried utility lines in the work area. Digging into them may cause a shock or an explosion.

Have the property or work area marked for buried lines and do not dig in marked areas. Contact your local marking service or utility company to have the property marked (for example, in the United States, call 811 for the nationwide marking service).

It is a violation of California Public Resource Code Section 4442 or 4443 to use or operate the engine on any forest-covered, brush-covered, or grass-covered land unless the engine is equipped with a spark arrester, as defined in Section 4442, maintained in effective working order or the engine is constructed, equipped, and maintained for the prevention of fire.

The enclosed engine owner's manual is supplied for information regarding the US Environmental Protection Agency (EPA) and the California Emission Control Regulation of emission systems, maintenance, and warranty. Replacements may be ordered through the engine manufacturer.

⚠ WARNING

CALIFORNIA
Proposition 65 Warning

The engine exhaust from this product contains chemicals known to the State of California to cause cancer, birth defects, or other reproductive harm.

Use of this product may cause exposure to chemicals known to the State of California to cause cancer, birth defects, or other reproductive harm.

Introduction

This machine is designed to grind and remove tree stumps and surface roots. It is not intended to cut rock or any other material other than wood and the soil around a stump.

Read this information carefully to learn how to operate and maintain your product properly and to avoid injury and product damage. You are responsible for operating the product properly and safely.

You may contact Toro directly at www.Toro.com for product safety and operation training materials, accessory information, help finding a dealer, or to register your product.

Whenever you need service, genuine Toro parts, or additional information, contact an Authorized Service Dealer or Toro Customer Service and have the model and serial numbers of your product ready. Figure 1 illustrates the location of the model and serial numbers on the product. Write the numbers in the space provided.

Important: **With your mobile device, you can scan the QR code on the serial number decal (if equipped) to access warranty, parts, and other product information.**

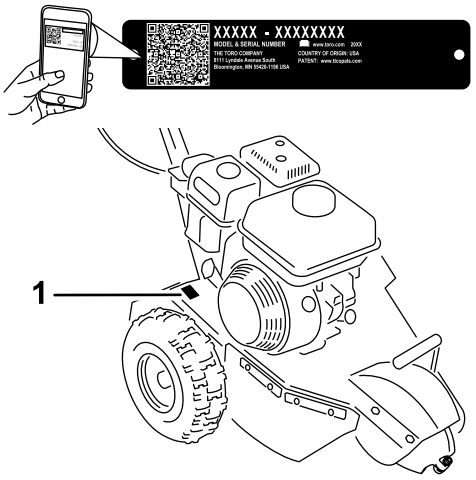

g243943

Figure 1

1. Model and serial number plate

Model No. _____

Serial No. _____

This manual identifies potential hazards and has safety messages identified by the safety-alert symbol (Figure 2), which signals a hazard that may cause serious injury or death if you do not follow the recommended precautions.

© 2019—The Toro® Company
8111 Lyndale Avenue South
Bloomington, MN 55420

Contact us at www.Toro.com.
Printed in the USA
All Rights Reserved



g000502

Figure 2

1. Safety-alert symbol

This manual uses 2 words to highlight information. **Important** calls attention to special mechanical information and **Note** emphasizes general information worthy of special attention.

Contents

Safety 3
- Safe Operating Practices 3
- Safety and Instructional Decals 5

Product Overview 7
- Controls 7
- Specifications 8
- Attachments/Accessories 8

Operation 9
- Before you Start 9
- Adding Fuel 9
- Performing Daily Maintenance 10
- Starting the Engine 11
- Shutting Off the Engine 11
- Grinding a Stump 11

Maintenance 13
- Recommended Maintenance Schedule(s) 13
- Engine Maintenance 14
  - Servicing the Air Cleaner 14
  - Servicing the Engine Oil 15
  - Servicing the Spark Plug 17
- Fuel System Maintenance 18
  - Cleaning the Sediment Cup 18
- Cooling System Maintenance 19
  - Cleaning the Engine Screen 19
- Belt Maintenance 20
  - Checking the Drive-Belt Tension 20
  - Adjusting the Drive Belt 20
  - Replacing the Drive Belt 21
- Grinder Maintenance 21
  - Replacing the Teeth 21
- Cleaning 22
  - Removing Debris from the Machine 22

Troubleshooting 23

Safety

Improper use or maintenance by the operator or owner can result in injury. To reduce the potential for injury, comply with these safety instructions and always pay attention to the safety-alert symbol ⚠, which means: **Caution**, **Warning**, or **Danger**—personal safety instruction. Failure to comply with the instruction may result in personal injury or death.

Safe Operating Practices

This product is capable of amputating hands and feet. Always follow all safety instructions to avoid serious injury or death.

⚠ WARNING

Engine exhaust contains carbon monoxide, an odorless poison that is fatal if inhaled.

Do not run the engine indoors or in an enclosed area.

Training

- Read the *Operator's Manual* and other training material. If the operator(s) or mechanic(s) cannot read English, it is the owner's responsibility to explain this material to them.
- Become familiar with the safe operation of the equipment, operator controls, and safety signs.
- All operators and mechanics should be trained. The owner is responsible for training the users.
- Never let children or untrained people operate or service the equipment. Local regulations may restrict the age of the operator.
- The owner/user can prevent and is responsible for accidents or injuries occurring to himself or herself, other people or property.

Preparation

- Wear appropriate clothing including gloves, eye protection, long pants, substantial slip-resistant footwear, and hearing protection. Tie back long hair and do not wear loose clothing or loose jewelry.
- Inspect the area where you will use the equipment and remove all objects, such as rocks, toys, and wire, that the machine could throw.
- Check that the operator's presence controls, safety switches, and shields are attached and functioning properly. Do not operate the machine unless they are functioning properly.

Fuel Safety

- Use extra care when handling fuel. It is flammable and its vapors are explosive.
- Extinguish all cigarettes, cigars, pipes, and other sources of ignition.
- Use only an approved fuel container.
- Do not remove the fuel cap or fill the fuel tank while the engine is running or hot.
- Do not add or drain fuel in an enclosed space.
- Do not store the machine or fuel container where there is an open flame, spark, or pilot light, such as on a water heater or other appliance.
- If you spill fuel, do not attempt to start the engine; avoid creating any source of ignition until the fuel vapors have dissipated.

Operation

- Use your full attention while operating the machine. Do not engage in any activity that causes distractions; otherwise, injury or property damage may occur.
- Never run an engine in an enclosed area.
- Operate the machine only in good light, keeping away from holes and hidden hazards.
- Ensure that all the drives are in neutral and the parking brake is engaged before starting the engine. Start the engine only from the operator's position.
- Never operate the machine without the guards securely in place. Ensure that all the interlocks are attached, adjusted, and functioning properly.
- Do not change the engine-governor setting or overspeed the engine.
- Park the machine on a level surface, engage the parking brake, and shut off the engine before leaving the operator's position for any reason.
- Keep your hands and feet away from moving parts.
- Look behind and down before backing up to ensure that the path is clear.
- Do not operate the machine when you are tired, ill, or under the influence of alcohol or drugs.
- Use care when loading or unloading the machine into a trailer or truck.
- Ensure that the area is clear of people before operating the machine. Stop the machine if anyone enters the area.
- Never leave a running machine unattended. Always shut off the engine, engage the parking brake, and verify that moving parts have stopped before leaving the machine.
- Never jerk the controls; use a steady motion.
- Watch for traffic when operating near or crossing roadways.
- Do not touch parts that may be hot from operation. Allow them to cool before attempting to maintain, adjust, or service the machine.
- Before grinding, have the area marked for underground utilities and do not grind in marked areas.
- Lightning can cause severe injury or death. If lightning is seen or thunder is heard in the area, do not operate the machine; seek shelter.

Maintenance and Storage

- Park the machine on a level surface, engage the parking brake, and shut off the engine. Wait for all movement to stop before adjusting, cleaning, or repairing the machine.
- Clean debris from the grinder, drives, mufflers, and engine to help prevent fires. Wipe up any spilled oil or fuel.
- Allow the engine to cool before storing and do not store near flames.
- Never allow untrained personnel to service the machine.
- Carefully release pressure from components with stored energy.
- Keep your hands and feet away from the moving parts. If possible, do not make adjustments with the engine running.
- Remove the spark-plug wires before making any repairs.
- Keep all parts in good working condition and all hardware tightened. Replace all worn or damaged decals.
- Keep all nuts and bolts tight. Keep the equipment in good condition.
- Never tamper with the safety devices.
- Keep the machine free of grass, leaves, or other debris buildup. Wipe up any spilled oil or fuel. Allow the machine to cool before storing.
- Engage the parking brake, shut off the engine, wait for all moving parts to stop, and inspect the machine if you strike an object. Make any necessary repairs before starting the machine.
- Use only genuine Toro replacement parts.

Safety and Instructional Decals

Safety decals and instructions are easily visible to the operator and are located near any area of potential danger. Replace any decal that is damaged or missing.

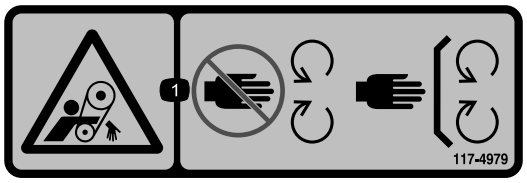

decal117-4979

117-4979

1. Entanglement hazard, belt—stay away from moving parts; keep all guards and shields in place.

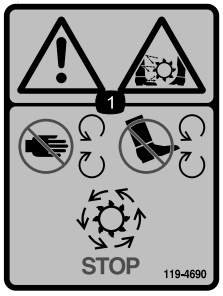

decal119-4690

119-4690

1. Warning; cutting/dismemberment hazard, grinding teeth—keep hands and feet away from all moving parts, keep all shields in place; wait for all moving parts to stop.



decal119-4691

119-4691

1. Warning—read the *Operator's Manual*; wait for the grinder blade to stop; shut off the engine, and fold the handle.

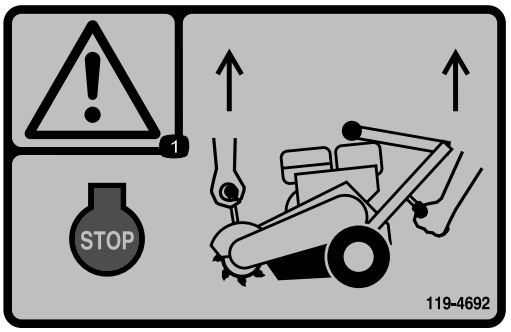

decal119-4692

119-4692

1. Warning—shut off the engine; use both hand holds to lift the grinder.



decal119-4693

119-4693

1. Thrown object hazard—keep bystanders a safe distance away from the machine.

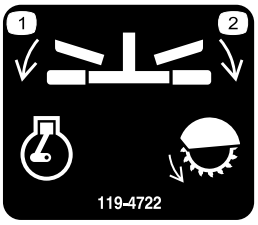

decal119-4722

119-4722

1. Engine—run
2. Grinder blade—engage

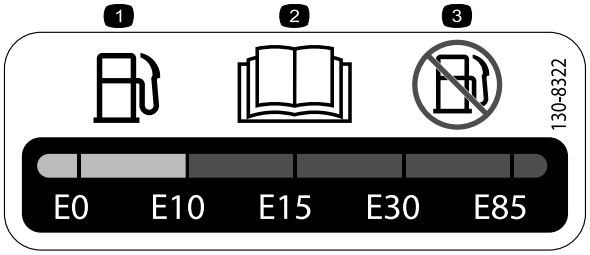

decal130-8322

130-8322

1. Only use fuel with an alcohol content by volume under 10%.
2. Read the *Operator's Manual* for more information on fuel.
3. Do not use fuel with an alcohol content by volume greater than 10%.



decal133-8062

133-8062

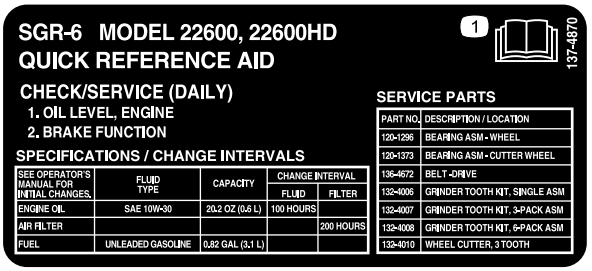

decal137-4870

137-4870

1. Read the *Operator's Manual*.

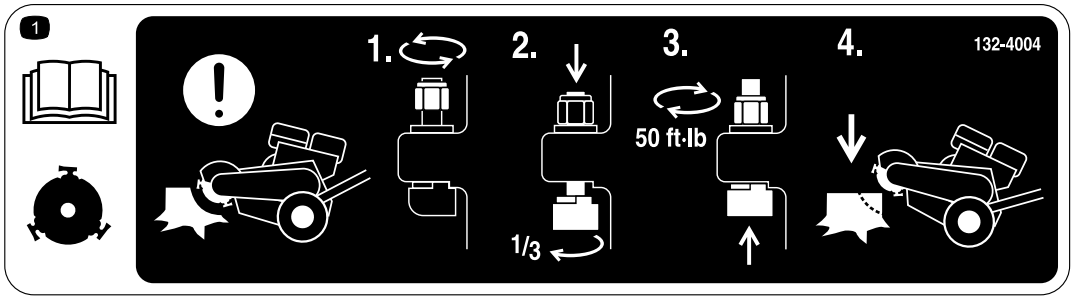

decal132-4004

132-4004

1. Warning, cutting wheel—to adjust the cutting wheel teeth between jobs 1) Loosen the nut; 2) Push the tooth down and rotate it 1/3 turn; 3) Tighten the nut to 68 N·m (50 ft-lb); 4) Proceed with grinding.

Product Overview

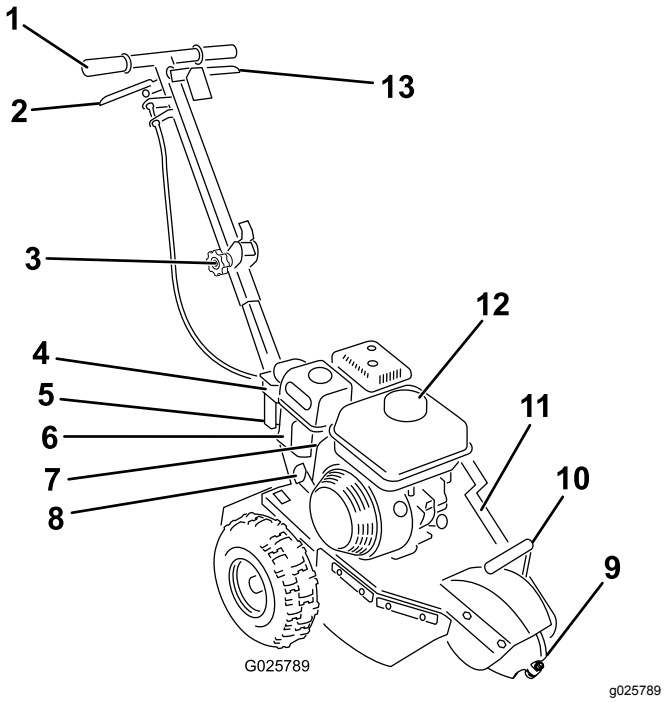

Figure 3

1. Handle
2. Throttle lever
3. Handle-release knob
4. Air filter
5. Sediment cup
6. Fuel valve
7. Choke
8. Recoil-start handle
9. Cutting wheel
10. Lift
11. Belt cover
12. Fuel cap
13. Safety bail

Controls

Become familiar with all the controls (Figure 3 and Figure 6) before you start the engine and operate the machine.

Handle-Release Knob

The handle on this machine can be folded down for easier transport.

1. Unscrew the handle-release knob from the machine (Figure 4).

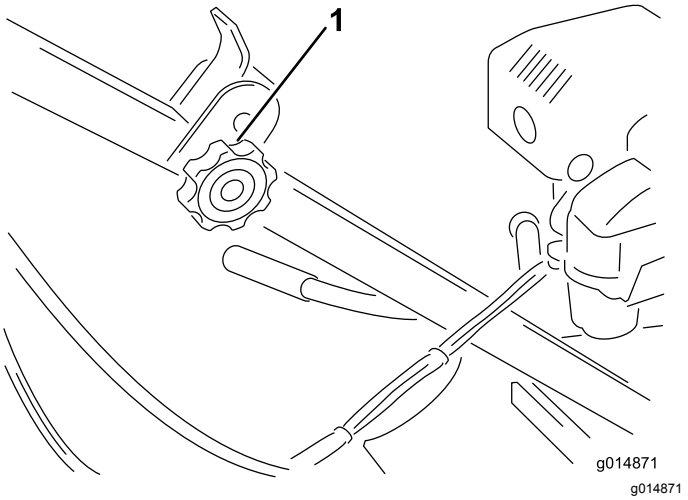

Figure 4

1. Handle-release knob

2. Fold the handle down toward the machine and screw the knob back onto the handle (Figure 5).

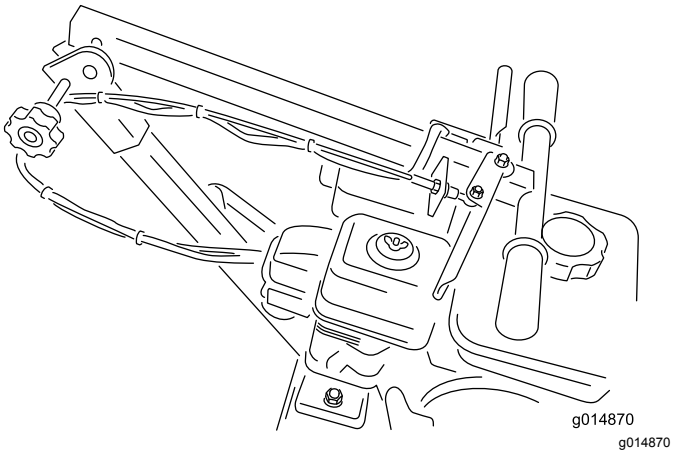

Figure 5

Safety Bail

The safety bail controls the engine. Hold the safety bail against the handle when you start the engine and use the machine. Release the safety bail to shut off the engine (Figure 6).

Throttle Lever

The throttle lever controls the engine speed. With the lever released, in the DISENGAGED position, the engine runs at idle. This is also the starting position. When you pull the lever to the handle, the engine speed increases, the centrifugal clutch engages, and the cutting wheel rotates.

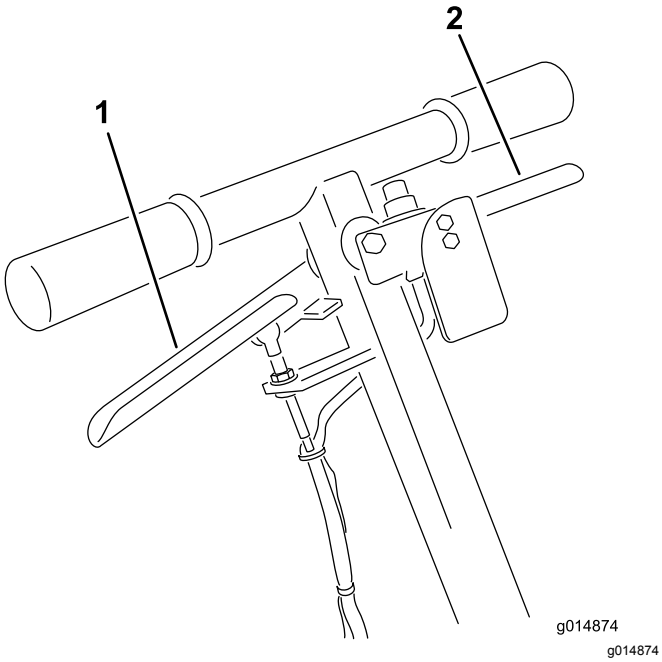

g014874

Figure 6

1. Throttle lever
2. Safety bail

Parking Brake

The parking brake holds the left wheel from turning to secure the machine and for easy movement of the machine from side to side when grinding a stump (Figure 7).

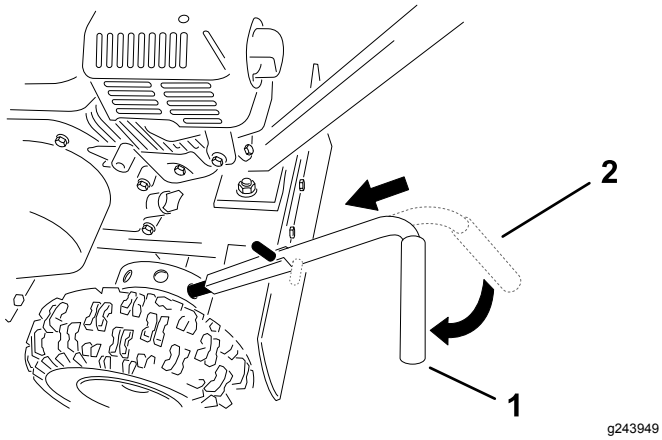

Figure 7

1. Parking brake (engaged)
2. Parking brake (disengaged)

Choke Lever

Use the choke lever (Figure 3) to start a cold engine. Before pulling the recoil-start handle, move the choke lever to the CLOSED position. Once the engine is running, move the choke lever to the OPEN position. Do not use the choke if the engine is already warmed up or if the air temperature is high.

Recoil-Start Handle

To start the engine, pull the recoil-start handle (Figure 3) quickly to turn the engine over. Refer to Starting the Engine (page 11) for the correct starting procedure.

Specifications

Note: Specifications and design are subject to change without notice.

Cutting Depth	30 cm (12 inches)
Length	127 cm (50 inches)
Width	56 cm (22 inches)
Height	107 cm (42 inches)
Weight	47 kg (103 lb)

Attachments/Accessories

A selection of Toro approved attachments and accessories is available for use with the machine to enhance and expand its capabilities. Contact your Authorized Service Dealer or authorized Toro distributor or go to www.Toro.com for a list of all approved attachments and accessories.

To ensure optimum performance and continued safety certification of the machine, use only genuine Toro replacement parts and accessories. Replacement parts and accessories made by other manufacturers could be dangerous, and such use could void the product warranty.

Operation

Note: Determine the left and right sides of the machine from the normal operating position.

Before you Start

- Dig away the earth and remove any stones near the tree stump that may interfere with your work. Check that the ground is free of foreign objects, such as electrical cables, barbed wire, etc.
- Cut or trim the stump using a power saw.
- Review all the safety decals on the machine.
- Ensure that you are familiar with safety regulations and shutdown procedures described in this manual.
- Ensure that all guards are in place and in good condition.
- Ensure that the blades and cutters are in place and in good condition.
- Ensure that the work area, cutter, and stump in particular are free from metallic objects such as wire, nails, etc. that could be thrown out and injure persons in the vicinity and damage the equipment.

Adding Fuel

⚠ DANGER

In certain conditions, fuel is extremely flammable and highly explosive. A fire or explosion from fuel can burn you and others and can damage property.

- **Fill the fuel tanks outdoors, in an open area, when the engine is cold. Wipe up any fuel that spills.**
- **Never fill the fuel tanks inside an enclosed trailer.**
- **Never smoke when handling fuel and stay away from an open flame or where fuel fumes may be ignited by a spark.**
- **Store fuel in an approved container and keep it out of the reach of children. Never buy more than a 30-day supply of fuel.**
- **Do not operate without entire exhaust system in place and in proper working condition.**

⚠ DANGER

In certain conditions during fueling, static electricity can be released, causing a spark that can ignite the fuel vapors. A fire or explosion from fuel can burn you and others and can damage property.

- **Always place fuel containers on the ground away from your vehicle before filling.**
- **Do not fill fuel containers inside a vehicle or on a truck or trailer bed, because interior carpets or plastic truck bed liners may insulate the container and slow the loss of any static charge.**
- **When practical, remove equipment from the truck or trailer and refuel the equipment with its wheels on the ground.**
- **If this is not possible, then refuel such equipment on a truck or trailer from a portable container rather than from a fuel-dispenser nozzle.**
- **If you must use a fuel-dispenser nozzle, keep the nozzle in contact with the rim of the fuel tank or container opening at all times until fueling is complete.**

⚠ WARNING

Fuel is harmful or fatal if swallowed. Long-term exposure to vapors can cause serious injury and illness.

- **Avoid prolonged breathing of vapors.**
- **Keep your face away from the nozzle and fuel tank opening.**
- **Keep fuel away from your eyes and skin.**

Fuel Recommendations

- For best results, use only clean, fresh (less than 30 days old), unleaded gasoline with an octane rating of 87 or higher ((R+M)/2 rating method).
- **Ethanol**: Gasoline with up to 10% ethanol (gasohol) or 15% MTBE (methyl tertiary butyl ether) by volume is acceptable. Ethanol and MTBE are not the same. Gasoline with 15% ethanol (E15) by volume is not approved for use. **Never use gasoline that contains more than 10% ethanol by volume**, such as E15 (contains 15% ethanol), E20 (contains 20% ethanol), or E85 (contains up to 85% ethanol). Using unapproved gasoline may cause performance problems and/or engine damage which may not be covered under warranty.
- **Do not** use gasoline containing methanol.
- **Do not** store fuel either in the fuel tank or in fuel containers over the winter unless you use a fuel stabilizer.
- **Do not** add oil to gasoline.

Using Stabilizer/Conditioner

Use a fuel stabilizer/conditioner in the machine to provide the following benefits:

- Keeps fuel fresh during storage of 90 days or less (drain the fuel tank when storing the machine for more than 90 days)
- Cleans the engine while it runs
- Eliminates gum-like varnish buildup in the fuel system, which causes hard starting

Important: **Do not use fuel additives containing methanol or ethanol.**

Add the correct amount of fuel stabilizer/conditioner to the fuel.

Note: A fuel stabilizer/conditioner is most effective when mixed with fresh fuel. To minimize the chance of varnish deposits in the fuel system, use fuel stabilizer at all times.

Filling the Fuel Tank

1. Park the machine on a level surface and engage the parking brake.
2. Shut off the engine and allow the engine to cool.
3. Clean around the fuel-tank cap and remove it (Figure 8).

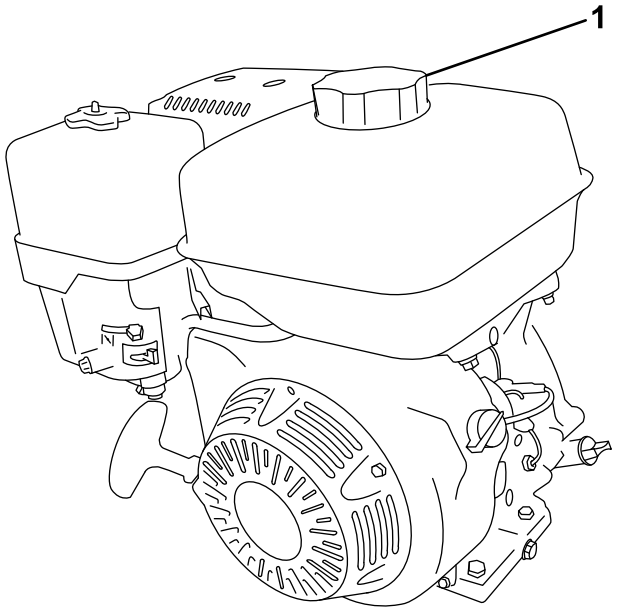

Figure 8

1. Fuel-tank cap

4. Fill the tank with fuel to about 6 to 13 mm (1/4 to 1/2 inch) below the bottom of the filler neck.

   Important: **This space in the tank allows fuel to expand. Do not fill the fuel tank completely full.**
5. Install the fuel-tank cap securely.
6. Wipe up any spilled fuel.

Performing Daily Maintenance

Before starting the machine each day, perform the Each Use/Daily procedures listed in Maintenance (page 13).

Starting the Engine

1. Move the fuel valve to the OPEN position, all the way to the right (Figure 9).

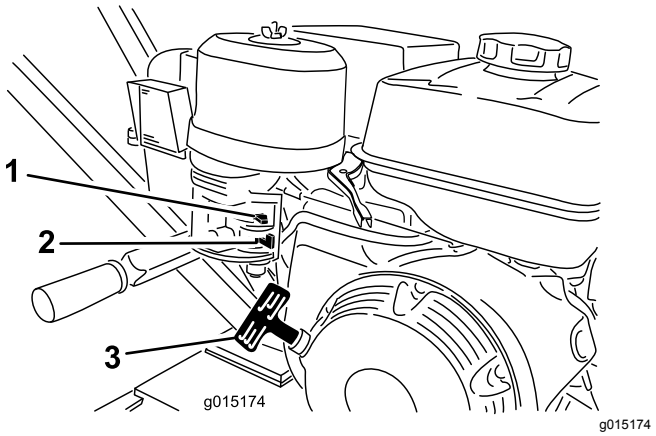

Figure 9

1. Choke lever
2. Fuel valve
3. Recoil-start handle

2. Move the choke lever to the ON position (Figure 9).

   Note: A warm or hot engine may not require choking.

3. Hold the safety bail against the handle and push the handle down enough to raise the cutting wheel off the ground.
4. Pull the recoil-start handle lightly until you feel resistance, then pull the handle briskly (Figure 9). Return the recoil-start handle gently.
5. After the engine starts, gradually move the choke lever back to the OFF position.

   Note: If the engine stalls or hesitates, move the choke back to the ON position again until the engine warms up. Then move it to the OFF position.

Shutting Off the Engine

1. Move the throttle to the DISENGAGE position.

   Note: If the engine has been working hard or is hot, let it run for a minute before releasing the safety bail. This helps to cool the engine before shutting it off. In an emergency, the engine may be shut off immediately.

2. Release the safety bail to shut off the engine.
3. Move the fuel valve to the CLOSED position, all the way to the left.

Grinding a Stump

⚠ DANGER

This machine is capable of amputating hands and feet.

- **Always wear substantial, slip-resistant footwear.**
- **Stay in the operating position while the machine is running, and keep away from moving parts.**
- **Keep all bystanders a safe distance away from the machine.**
- **Stop the machine immediately if any people or animals enter the work area.**

⚠ WARNING

Grinding a stump throws wood chips, soil, and other debris into the air, which could injure you or bystanders.

- **Always wear eye protection and long pants when using the grinder.**
- **Keep all bystanders a safe distance away from the grinder.**

⚠ WARNING

The grinder is very loud when cutting a stump and can damage your ears.

Always wear hearing protection when using the grinder.

1. Set throttle to the DISENGAGE position, start the engine, and allow the machine to warm up for 2 minutes.
2. Push the handle down enough to raise the cutting wheel off the ground (Figure 10).

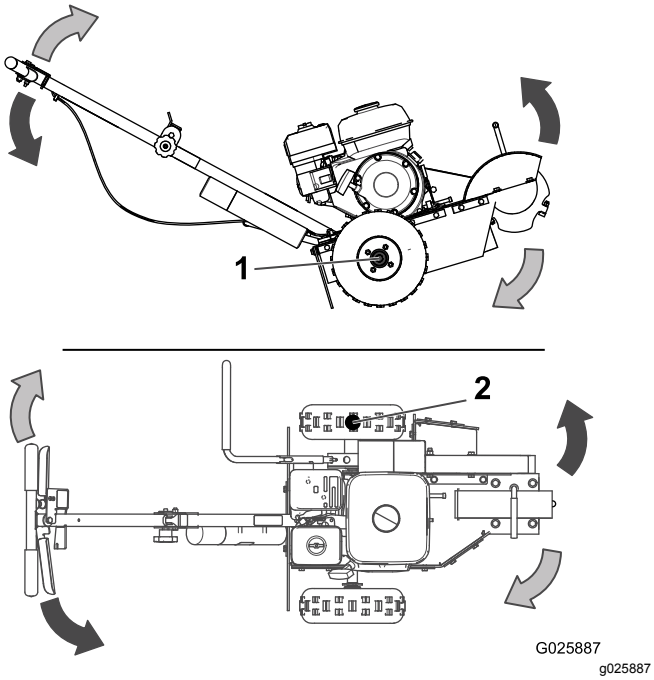

Figure 10

1. Pivot point
2. Pivot point when the parking brake is engaged

3. Move the machine to the front of the stump and engage the parking brake.
4. Move throttle up to the ENGAGE position. The cutting wheel will begin rotating.
5. Swing the cutting wheel to one side (Figure 10), then lower it approximately 1 to 2.5 cm (1/2 to 1 inch) into the front-top corner of the stump.

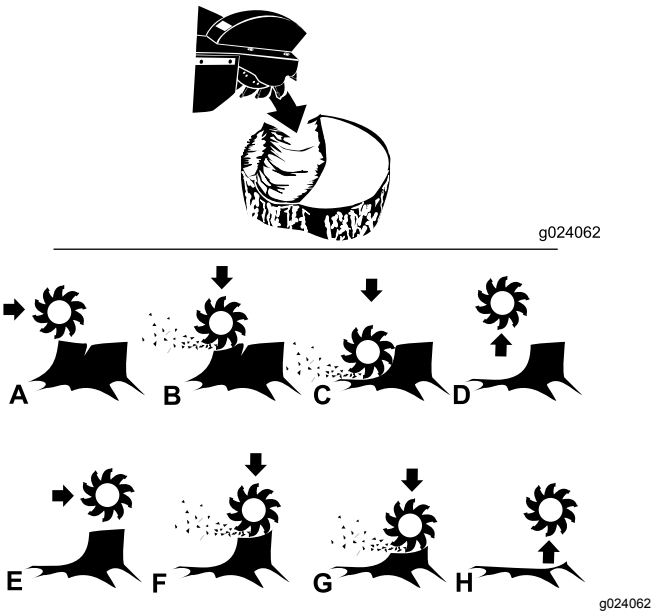

Figure 11

6. Using a sweeping motion, swing the cutting wheel back and forth, lowering the cutting wheel approximately 1 to 2.5 cm (1/2 to 1 inch) before each sweep, until you have removed the front portion of the stump to ground level (A through D in Figure 11).
7. Raise the cutting wheel, release the parking brake, and move the machine forward a few centimeters (inches). Engage the parking brake.
8. Repeat steps 5 and 7 until you have completely removed the stump (E through H in Figure 11).
9. Move throttle to the DISENGAGE position, push the handle down enough to raise the cutting wheel off the ground. Wait for the cutting wheel to stop rotating then release the parking brake and pull the machine away from the stump.

   Note: Do not let the front of the machine touch the ground until the cutting wheel has stopped turning.
10. Shut off the engine; refer to Shutting Off the Engine (page 11).

Maintenance

Note: Determine the left and right sides of the machine from the normal operating position.

Important: **You can tip the machine backward or on its side to clean or service it, but no longer than 2 minutes. If you hold the machine in this position for too long, fuel can drain into the crankcase and damage the engine. Should this happen, perform an extra oil change on the engine, then turn the engine over a few revolutions with the starter handle before starting the engine again.**

Recommended Maintenance Schedule(s)

Maintenance Service Interval	Maintenance Procedure
After the first 20 hours	• Change the engine oil.
Before each use or daily	• Check the air filter (more often in dirty or dusty conditions). • Check the engine-oil level. • Clean the engine screen. • Check the condition of the teeth; rotate or replace any that are worn or damaged and torque the nuts for all teeth. • Remove debris from the machine.
Every 25 hours	• Check the drive-belt tension.
Every 50 hours	• Service the air filter
Every 100 hours	• Change the engine oil. (Service more frequently if conditions are extremely dusty or sandy.) • Check the spark plug. • Clean the sediment cup.
Every 300 hours	• Replace the air filter. • Replace the spark plug.
Yearly or before storage	• Change the engine oil. • Clean the sediment cup.

Important: **Refer to your engine owner's manual for additional maintenance procedures.**

Engine Maintenance

Servicing the Air Cleaner

Service Interval: Before each use or daily—Check the air filter (more often in dirty or dusty conditions).

Every 50 hours/Every 3 months (whichever comes first)—Service the air filter

Every 300 hours/Yearly (whichever comes first)—Replace the air filter.

The cyclone air filter collects the largest contaminant particles, which collect in the container. When you can see a layer of dirt at the bottom of the container, clean the cyclone housing, air channels, and air-intake screen.

Servicing the Cyclone Housing

1. Park the machine on a level surface and engage the parking brake.
2. Shut off the engine and wait for all moving parts to stop.
3. Remove the 3 screws holding the cyclone housing to the air-cleaner cover.
4. Remove the housing with the air-intake screen and remove the air channels.

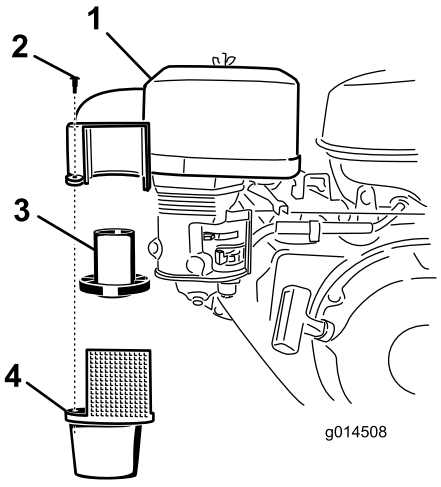

g014508

Figure 12

1. Air-cleaner cover
2. Screw
3. Air channels
4. Cyclone housing with air-intake screen

Note: The air channels may remain in the upper portion or follow along with the housing when removed.

5. Clean the components with water, detergent, and a brush then dry the components carefully.
6. Place the air channels in the cyclone housing.
7. Insert cyclone housing into position and make sure that it fits in the upper portion.

   Important: **Do not use force; align it in place before fitting the screws.**
8. Secure the cyclone housing using the 3 screws.

Servicing the Air-Cleaner Elements

Removing the Foam and Paper Elements

1. Park the machine on a level surface and engage the parking brake.
2. Shut off the engine and wait for all moving parts to stop.
3. Remove the wing nut and lift off the air-cleaner cover with the air-filter cowling (Figure 13).

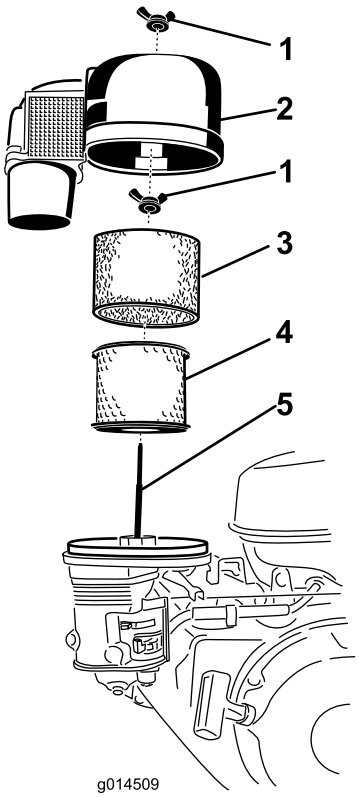

g014509

Figure 13

1. Wing nut
2. Air-cleaner cover
3. Foam element
4. Paper element
5. Stud

4. Remove the foam element (Figure 13).
5. Remove the wing nut on top of the paper element and remove the paper element (Figure 13).

Servicing the Foam Air-Cleaner Element

1. Wash the foam element using a mild detergent and water.
2. Squeeze it dry with a clean cloth.
3. Soak it with new engine oil.
4. Gently squeeze out excess oil from the element in an absorbent cloth.

Servicing the Paper Air-Cleaner Element

1. Clean the paper element by tapping it gently to remove dust. If it is very dirty, replace the paper element (Figure 15).
2. Inspect the element for tears, an oily film, or damage to the rubber seal.
3. Replace the paper element if it is damaged.

   Important: **Do not clean the paper filter.**

Installing the Foam and Paper Elements

1. Mount the paper element in the air-cleaner housing and secure it with the wing nut.
2. Position the foam element over the paper element.
3. Install the air-cleaner cover and secure it with the wing nut.

Servicing the Engine Oil

Service Interval: Before each use or daily

After the first 20 hours/After the first month (whichever comes first)

Every 100 hours/Every 6 months (whichever comes first) (Service more frequently if conditions are extremely dusty or sandy.)

Yearly or before storage

Engine-Oil Specifications

Oil Type: Detergent oil with an API service of SJ or higher.

Crankcase Capacity: 0.6 L (20.3 fl oz)

Viscosity: Refer to the table below.

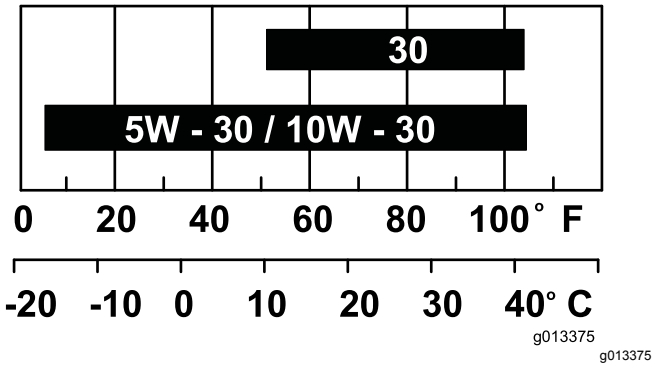

g013375

Figure 14

Checking the Engine-Oil Level

1. Park the machine on a level surface and engage the parking brake.
2. Shut off the engine and wait for all moving parts to stop.
3. Check the engine-oil level as shown in Figure 15.

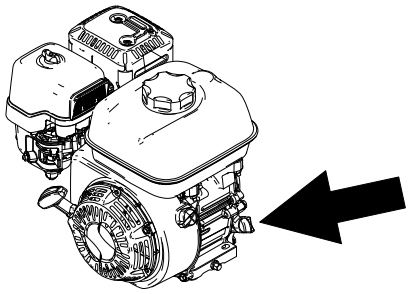

g244086

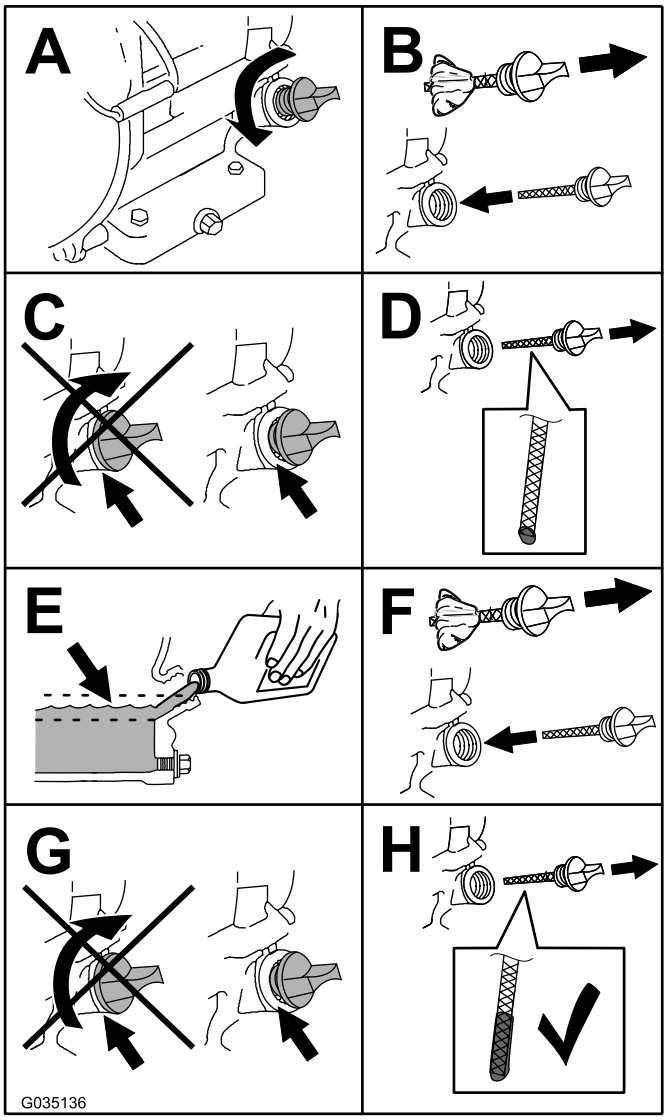

g035136

Figure 15

Changing the Engine Oil

1. Start the engine and let it run for 5 minutes.

   Note: This warms the oil so that it drains better.
2. Park the machine on a level surface and engage the parking brake.
3. Shut off the engine and wait for all moving parts to stop.
4. Change the oil as shown in (Figure 16).

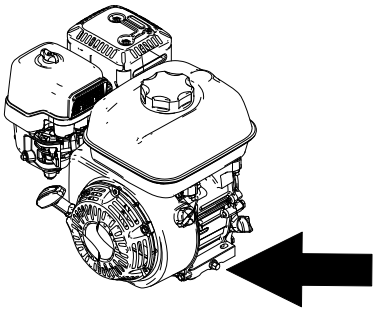

g244099

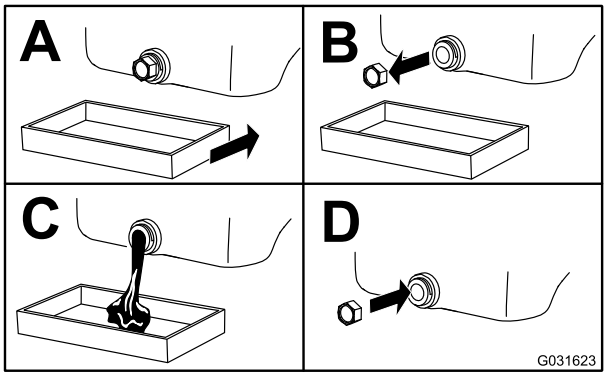

g031623

Figure 16

5. Slowly pour approximately 80% of the specified oil into the filler tube and slowly add the additional oil to bring it to the **Full** mark (Figure 17).

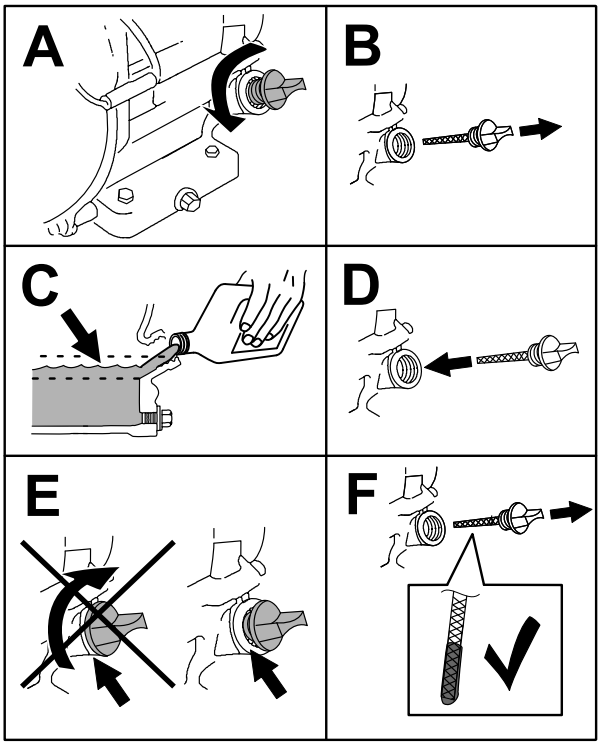

g206640

Figure 17

6. Dispose of the used oil at a recycling center.

Servicing the Spark Plug

Service Interval: Every 100 hours—Check the spark plug.

Every 300 hours—Replace the spark plug.

Ensure that the air gap between the center and side electrodes is correct before installing the spark plug. Use a spark plug wrench for removing and installing the spark plug and a gapping tool/feeler gauge to check and adjust the air gap. Install a new spark plug if necessary.

Type: BPR6ES (NKG) or equivalent

Air Gap: 0.70 to 0.80 mm (0.28 to 0.031 inch)

Removing the Spark Plug

1. Park the machine on a level surface and engage the parking brake.
2. Shut off the engine, wait for all moving parts to stop, and allow the engine to cool.
3. Locate and remove the spark plug (Figure 18).

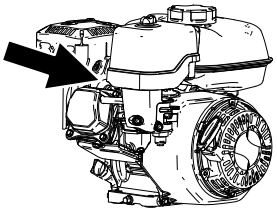

g244101

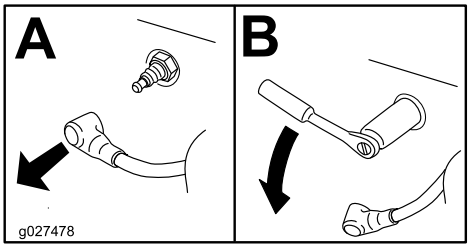

g027478

Figure 18

Checking the Spark Plug

Important: **Do not clean the spark plug(s). Always replace the spark plug(s) when it has: a black coating, worn electrodes, an oily film, or cracks.**

If you see light brown or gray on the insulator, the engine is operating properly. A black coating on the insulator usually means the air cleaner is dirty.

Set the gap to 0.70 to 0.80 mm (0.28 to 0.031 inch).

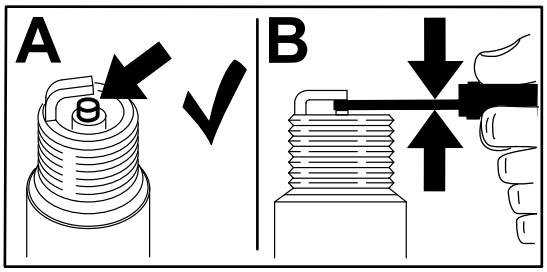

g206628

Figure 19

Installing the Spark Plug

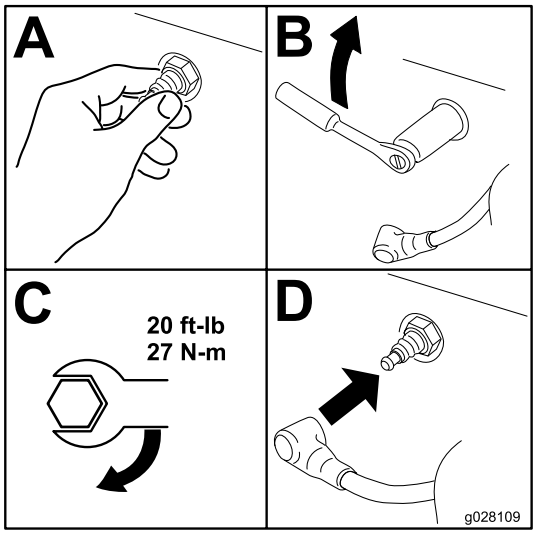

g028109

Figure 20

Fuel System Maintenance

Cleaning the Sediment Cup

Service Interval: Every 100 hours

Yearly or before storage

Underneath the fuel valve is a sediment cup to catch dirt in the fuel.

1. Park the machine on a level surface and engage the parking brake.
2. Shut off the engine and wait for all moving parts to stop.
3. Move the fuel valve to the OFF position, all the way to the left.
4. Unscrew the sediment cup (Figure 21).

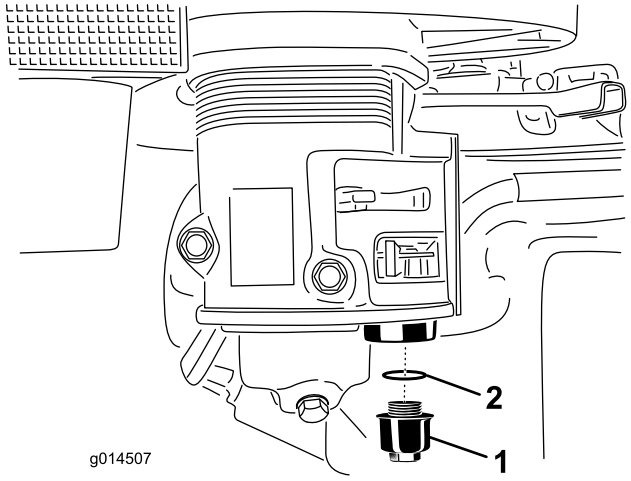

g014507

Figure 21

1. Sediment cup
2. O-ring

5. Clean the reservoir and the O-ring using a cleaning solvent and dry carefully.

   Note: Make sure not to misplace the O-ring.

6. Place the O-ring in the groove of the cup and replace the sediment cup.

7. Turn the fuel valve to the ON position, all the way to the right, and check for leaks.

   Note: If it leaks, replace the O-ring.

Cooling System Maintenance

Cleaning the Engine Screen

Service Interval: Before each use or daily

Before each use, remove any buildup of grass, dirt, or other debris from the engine screen. This helps ensure adequate cooling and correct engine speed and reduces the possibility of overheating and mechanical damage to the engine.

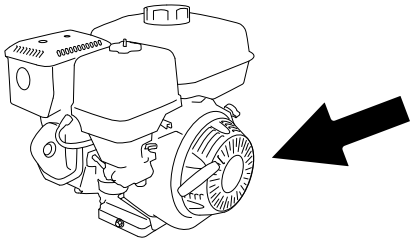

g242388

Figure 22

Belt Maintenance

Checking the Drive-Belt Tension

Service Interval: Every 25 hours

Note: Replace the belt if it shows any signs of wear, cracks, or damage.

1. Park the machine on a level surface and engage the parking brake.
2. Shut off the engine and wait for all moving parts to stop.
3. Remove the 2 bolts, 2 washers, and belt guard (Figure 23).

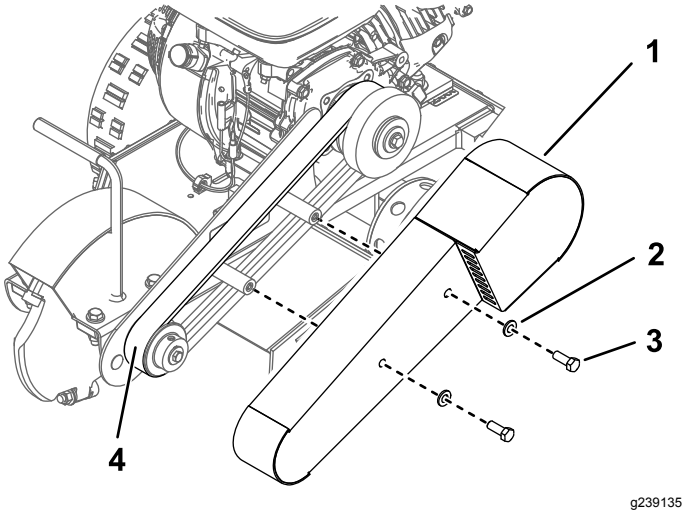

g239135

Figure 23

1. Belt guard
2. Washer
3. Bolt
4. Belt

4. Push down on the belt to check the tension. You should be able to push the new belt down 5.6 mm (0.22 inch) using 2.9 kg (6.5 lb) of force (Figure 24).

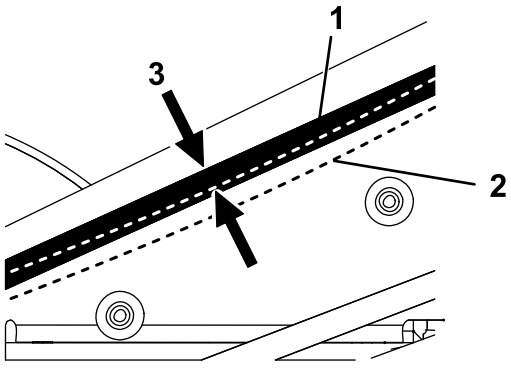

g244102

Figure 24

1. Belt
2. Belt pushed down
3. 6 to 10 mm (1/4 to 3/8 inch)

Important: **To extend the belt life, maintain proper tension. A loose belt can cause excessive cutting wheel slippage and early belt failure. A belt that is too tight can cause bearing and shaft failure and rapid belt wear.**

5. If the belt needs adjustment, refer to Adjusting the Drive Belt (page 20). If the belt does not need adjustment, install the belt guard as shown in Figure 23.

Adjusting the Drive Belt

1. Park the machine on a level surface and engage the parking brake.
2. Shut off the engine and wait for all moving parts to stop.
3. Remove the belt guard (Figure 23).
4. Loosen the 4 engine mounting bolts, and jam nuts holding the adjustment bolt (Figure 25).

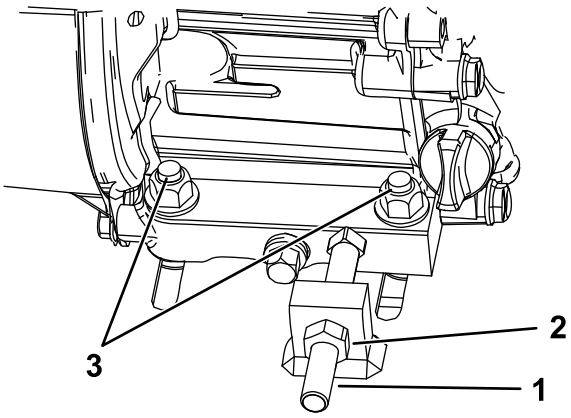

g244856

Figure 25

1. Adjustment bolt
2. Jam Nut
3. Engine mount bolt

5. Turn the square head adjusting bolt on the frame clockwise to tighten the belt; turn it counter clockwise to loosen the belt.

   Important: **Important: Make sure to tighten all engine bolts after proper belt adjustment is achieved.**

6. Install the belt guard and secure with previously removed hardware.

Replacing the Drive Belt

1. Remove the 2 bolts, 2 washers, and belt guard (Figure 23).
2. Loosen the 4 engine mounting bolts, and jam nuts holding the adjustment bolt (Figure 25).
3. Remove the belt.
4. Install the new belt around the pulleys.
5. Tighten the jam nut on the tensioner bolt.
6. Push down on the belt to check the tension. You should be able to push the new belt down 5.6 mm (0.22 inch) using 3.4 kg (7.4 lb) of force. Adjust the tensioner bolt as necessary to tighten or loosen the belt.

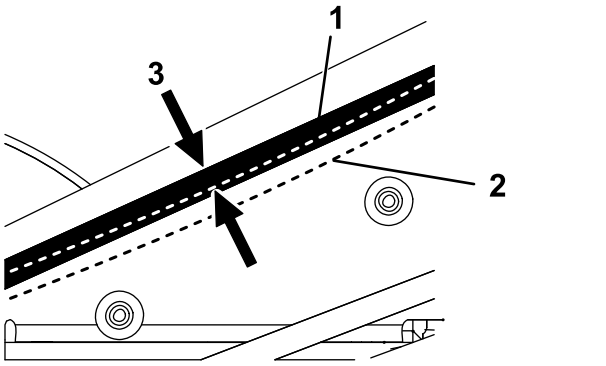

Figure 26

1. Belt
2. Belt pushed down
3. 5.6 mm (0.22 inch)

7. Tighten the fasteners securing the engine to the frame (Figure 25).

   Note: Ensure that the engine does not twist in the chassis and the clutch pulley is aligned with the belt.

8. Install the belt guard (Figure 23).

Grinder Maintenance

Replacing the Teeth

Service Interval: Before each use or daily—Check the condition of the teeth; rotate or replace any that are worn or damaged and torque the nuts for all teeth.

Due to the high amount of wear placed on the teeth, you need to rotate and replace them periodically (Figure 27). Before you rotate or replace them, inspect each tooth holder on the wheel, including the flat lands that prevent the teeth from rotating. If the tooth holder is damaged, replace the wheel. Torque the nuts 68 N·m (50 ft-lb) for any teeth that you are not rotating or replacing.

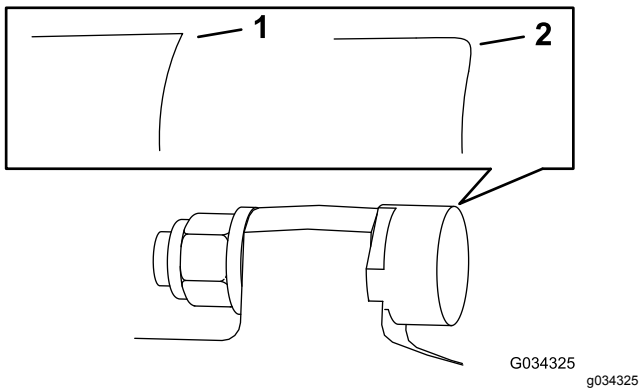

Figure 27

1. Sharp tooth
2. Worn tooth

Each tooth is indexed with 3 positions so you can rotate it twice, exposing a new sharp edge before replacing the tooth. To rotate a tooth, loosen the nut securing the tooth (Figure 28). Push the tooth forward and rotate it 1/3 of a turn, bringing an unused edge to the outside. Torque the nut securing the tooth to 68 N·m (50 ft-lb).

To replace a tooth, remove the nut securing the tooth, then install a new tooth, washer, and nut in the same position (Figure 28). Torque the nut securing the tooth to 68 N·m (50 ft-lb).

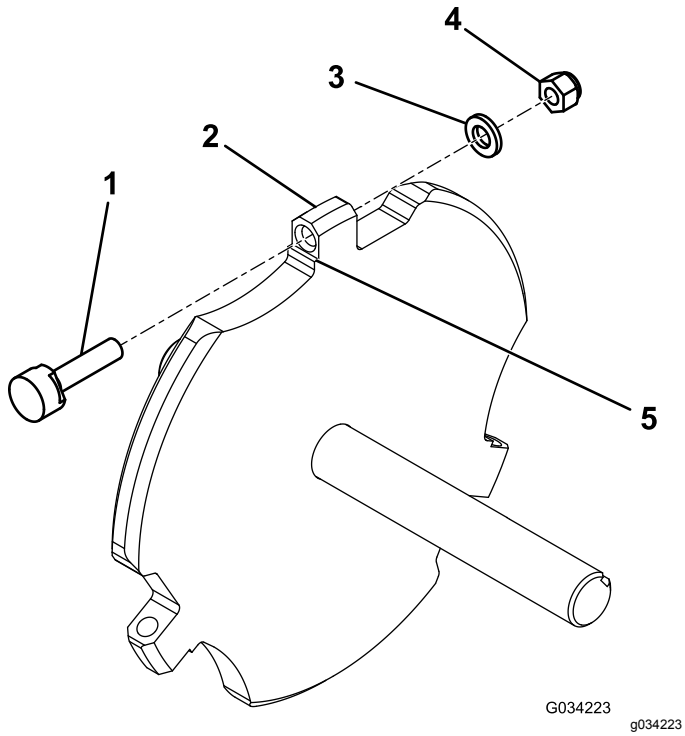

Figure 28

1. Tooth
2. Tooth holder
3. Washer
4. Nut
5. Flat land

Cleaning

Removing Debris from the Machine

Regular cleaning and washing increases the life span of the machine. Clean the machine directly after use, before the dirt hardens.

Before cleaning, check that the fuel-tank cap is properly in place to avoid getting water in the tank.

Use care when using a high-pressure sprayer, because it can damage warning decals, instruction signs, and the engine

Important: **Lubricate the cutting wheel bearings after cleaning.**

Troubleshooting

Problem	Possible Cause	Corrective Action
The engine does not start.	1. The safety bail is in the OFF position. 2. If your model is equipped with an engine with an On/Off switch, the switch is in the OFF position. 3. The fuel-shutoff valve is closed. 4. The choke is open. 5. The fuel tank is empty. 6. The spark plug wire is loose or disconnected.	1. Hold the safety bail against the handle. 2. Move the switch to the ON position. 3. Open the fuel-shutoff valve. 4. Close the choke when starting a cold engine. 5. Fill the tank with fresh fuel. 6. Check the electrode gap and clean or replace the spark plug.
The engine runs rough.	1. The choke is closed. 2. The air filter is clogged. 3. The fuel line is clogged. 4. There is water or contaminants in the fuel. 5. The spark plugs are worn or have buildup on the electrodes.	1. Open the choke. 2. Clean or replace the air filter. 3. Clean the sediment cup. 4. Drain the fuel tank and fill it with fresh fuel. 5. Check the electrode gap and clean or replace the spark plug.
The belt slips or comes off the pulleys.	1. The belt tension is insufficient.	1. Adjust the belt tension. Reduce the cutting depth.
The cutting wheel does not rotate.	1. The engine speed is insufficient to activate the centrifugal clutch. 2. The belt tension is insufficient. 3. The clutch shoes are worn.	1. Move the throttle to the ENGAGED position. 2. Adjust the belt tension. 3. Replace the clutch.
The cutting wheel continues to rotate.	1. The engine speed is excessive. 2. The belt is off the pulleys or broken. 3. The clutch springs are weak or broken.	1. Move the throttle to the DISENGAGED position. 2. Replace the drive belt. 3. Replace the clutch.
The parking brake does not hold.	1. The parking brake is out of adjustment. 2. The brake pads are worn.	1. Adjust the parking brake. 2. Replace the brake.

California Proposition 65 Warning Information

What is this warning?

You may see a product for sale that has a warning label like the following:



WARNING: Cancer and Reproductive Harm—www.p65Warnings.ca.gov.

What is Prop 65?

Prop 65 applies to any company operating in California, selling products in California, or manufacturing products that may be sold in or brought into California. It mandates that the Governor of California maintain and publish a list of chemicals known to cause cancer, birth defects, and/or other reproductive harm. The list, which is updated annually, includes hundreds of chemicals found in many everyday items. The purpose of Prop 65 is to inform the public about exposure to these chemicals.

Prop 65 does not ban the sale of products containing these chemicals but instead requires warnings on any product, product packaging, or literature with the product. Moreover, a Prop 65 warning does not mean that a product is in violation of any product safety standards or requirements. In fact, the California government has clarified that a Prop 65 warning "is not the same as a regulatory decision that a product is 'safe' or 'unsafe.'" Many of these chemicals have been used in everyday products for years without documented harm. For more information, go to https://oag.ca.gov/prop65/faqs-view-all.

A Prop 65 warning means that a company has either (1) evaluated the exposure and has concluded that it exceeds the "no significant risk level"; or (2) has chosen to provide a warning based on its understanding about the presence of a listed chemical without attempting to evaluate the exposure.

Does this law apply everywhere?

Prop 65 warnings are required under California law only. These warnings are seen throughout California in a wide range of settings, including but not limited to restaurants, grocery stores, hotels, schools, and hospitals, and on a wide variety of products. Additionally, some online and mail order retailers provide Prop 65 warnings on their websites or in catalogs.

How do the California warnings compare to federal limits?

Prop 65 standards are often more stringent than federal and international standards. There are various substances that require a Prop 65 warning at levels that are far lower than federal action limits. For example, the Prop 65 standard for warnings for lead is 0.5 µg/day, which is well below the federal and international standards.

Why don't all similar products carry the warning?

- Products sold in California require Prop 65 labelling while similar products sold elsewhere do not.
- A company involved in a Prop 65 lawsuit reaching a settlement may be required to use Prop 65 warnings for its products, but other companies making similar products may have no such requirement.
- The enforcement of Prop 65 is inconsistent.
- Companies may elect not to provide warnings because they conclude that they are not required to do so under Prop 65; a lack of warnings for a product does not mean that the product is free of listed chemicals at similar levels.

Why does Toro include this warning?

Toro has chosen to provide consumers with as much information as possible so that they can make informed decisions about the products they buy and use. Toro provides warnings in certain cases based on its knowledge of the presence of one or more listed chemicals without evaluating the level of exposure, as not all the listed chemicals provide exposure limit requirements. While the exposure from Toro products may be negligible or well within the "no significant risk" range, out of an abundance of caution, Toro has elected to provide the Prop 65 warnings. Moreover, if Toro does not provide these warnings, it could be sued by the State of California or by private parties seeking to enforce Prop 65 and subject to substantial penalties.