100208043_2000004587_Rev BA

CREST®

CONDENSING BOILER

Installation & Operation Manual
Models: 751 - 6001
Series: 100 - 101 & 110 - 111

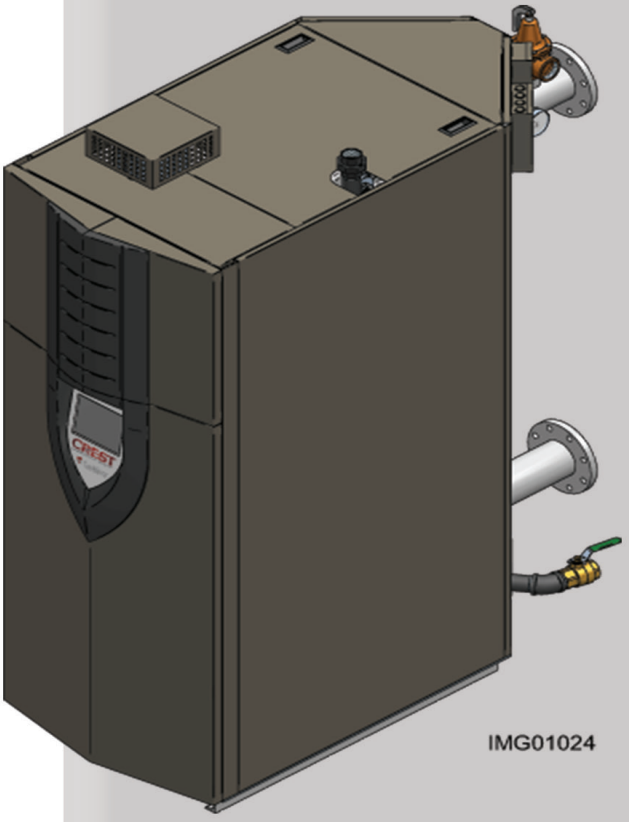

IMG01024

⚠ WARNING This manual must only be used by a qualified heating installer / service technician. Read all instructions, including this manual and the Crest Service Manual, before installing. Perform steps in the order given. Failure to comply could result in severe personal injury, death, or substantial property damage.

Save this manual for future reference.

Lochinvar®
HIGH EFFICIENCY BOILERS & WATER HEATERS

Contents

HAZARD DEFINITIONS 2
PLEASE READ BEFORE PROCEEDING 3
THE CREST -- HOW IT WORKS 4-5
RATINGS 6
1. DETERMINE BOILER LOCATION
Clearances 7
Provide Air Openings to Room 8
Flooring and Foundation 8
Vent and Air Piping 8
Prevent Combustion Air Contamination 8
Using an Existing Vent System to Install a New Boiler 9
Corrosive Contaminants and Sources 9
Removing a Boiler from Existing Common Vent 10
Remove Boiler from Wood Pallet 11
Combustion and Ventilation Air Requirements 12-13
2. GENERAL VENTING
Direct Venting Options - Sidewall Vent 14
Direct Venting Options - Vertical Vent 14
Direct Venting Options - Vert. Vent, Opt. Rm Air 14
Direct Venting Options - Vert. Vent, Sidewall Air 14
Install Vent and Combustion Air Piping 15
Air Inlet Pipe Materials 15
Vent and Air Piping 16
Air Intake / Vent Connections 16
Min./Max. Combustion Air & Vent Piping Lengths 18
Vent and Air Piping 19
Common Venting 20
PVC/CPVC 20-21
Polypropylene 22
3. VERTICAL DIRECT VENTING
Vent/Air Termination - Vertical 23
Determine Location 23
Prepare Roof Penetrations 23
Termination and Fittings 23-24
Multiple Vent/Air Terminations 24
4. SIDEWALL DIRECT VENTING
Vent/Air Termination - Sidewall 25-27
Determine Location 25-27
Prepare Wall Penetrations 27
Termination and Fittings 27
Multiple Vent/Air Terminations 27-28
Room Air 28
5. HYDRONIC PIPING
System Water Piping Methods 29
Low Water Cutoff Device 29
Chilled Water System 29
Freeze Protection 29
General Piping Information 29
Circulator Sizing 30
Near Boiler Piping Components 32
6. GAS CONNECTIONS
Connecting Gas Supply Piping 37
Natural Gas 38
Pipe Sizing for Natural Gas 38
Natural Gas Supply Pressure Requirements 38
Propane Gas 38
Pipe Sizing for Propane Gas 38
Propane Supply Pressure Requirements 38
Check Inlet Gas Supply 39-40
Gas Valve Replacement 40
7. FIELD WIRING
Line Voltage Connections 41
Low Voltage Connections 42
Wiring of the Cascade 43
8. CONDENSATE DISPOSAL
Condensate Drain 45
9. STARTUP 46-54
10. OPERATING INFORMATION
General 55-57
Cascade 58
Sequence of Operation 59
Home Screen 60
11. MAINTENANCE
Maintenance & Annual Startup 61-65
12. DIAGRAMS
Ladder Diagrams ..... 66,68,70, and 72
Wiring Diagrams ..... 67,69,71, and 73
Revision Notes ..... Back Cover

Hazard definitions

The following defined terms are used throughout this manual to bring attention to the presence of hazards of various risk levels or to important information concerning the life of the product.

DANGER DANGER indicates an imminently hazardous situation which, if not avoided, will result in death or serious injury.

⚠WARNING WARNING indicates a potentially hazardous situation which, if not avoided, could result in death or serious injury.

⚠CAUTION CAUTION indicates a potentially hazardous situation which, if not avoided, may result in minor or moderate injury.

CAUTION CAUTION used without the safety alert symbol indicates a potentially hazardous situation which, if not avoided, may result in property damage.

NOTICE NOTICE indicates special instructions on installation, operation, or maintenance that are important but not related to personal injury or property damage.

Please read before proceeding

⚠WARNING **Installer** – Read all instructions, including this manual and the Crest Service Manual, before installing. Perform steps in the order given.

User – This manual is for use only by a qualified heating installer/ service technician. Refer to the User's Information Manual for your reference.

Have this boiler serviced/inspected by a qualified service technician, at least annually.

Failure to comply with the above could result in severe personal injury, death or substantial property damage.

NOTICE When calling or writing about the boiler – Please have the boiler model and serial number from the boiler rating plate.

Consider piping and installation when determining boiler location.

Any claims for damage or shortage in shipment must be filed immediately against the transportation company by the consignee.

Factory warranty (shipped with unit) does not apply to units improperly installed or improperly operated.

⚠WARNING Failure to adhere to the guidelines on this page can result in severe personal injury, death, or substantial property damage.

⚠WARNING If the information in this manual is not followed exactly, a fire or explosion may result causing property damage, personal injury or loss of life.

This appliance MUST NOT be installed in any location where gasoline or flammable vapors are likely to be present.

WHAT TO DO IF YOU SMELL GAS

- Do not try to light any appliance.
- Do not touch any electric switch; do not use any phone in your building.
- Immediately call your gas supplier from a near by phone. Follow the gas supplier's instructions.
- If you cannot reach your gas supplier, call the fire department.
- Installation and service must be performed by a qualified installer, service agency, or the gas supplier.

⚠WARNING DO NOT install units in rooms or environments that contain corrosive contaminants (see Table 1A on page 9). Failure to comply could result in severe personal injury, death, or substantial property damage.

⚠WARNING The California Safe Drinking Water and Toxic Enforcement Act requires the Governor of California to publish a list of substances known to the State of California to cause cancer, birth defects, or other reproductive harm, and requires businesses to warn of potential exposure to such substances.

This product contains a chemical known to the State of California to cause cancer, birth defects, or other reproductive harm. This boiler can cause low level exposure to some of the substances listed in the Act.

When servicing boiler –

- To avoid electric shock, disconnect electrical supply before performing maintenance.
- To avoid severe burns, allow boiler to cool before performing maintenance.

Boiler operation –

- Do not block flow of combustion or ventilation air to the boiler.
- Should overheating occur or gas supply fail to shut off, do not turn off or disconnect electrical supply to circulator. Instead, shut off the gas supply at a location external to the appliance.
- Do not use this boiler if any part has been under water. The possible damage to a flooded appliance can be extensive and present numerous safety hazards. Any appliance that has been under water must be replaced.
- The installer must verify that at least one carbon monoxide alarm has been installed within a residential living space or home following the alarm manufacturer's instructions and applicable local codes before putting the appliance into operation.

Boiler water –

- Thoroughly flush the system to remove debris. Use an approved pre-commissioning cleaner (see Start-Up Section), without the boiler connected, to clean the system and remove sediment. The high-efficiency heat exchanger can be damaged by build-up or corrosion due to sediment.

  NOTE: Cleaners are designed for either new systems or pre-existing systems. Choose accordingly.

Freeze protection fluids –

- Lochinvar recommends inhibited propylene glycol solutions which are specifically formulated for hydronic systems. Never use automotive antifreeze.

The Crest - How it works...

1. **Front access panels**
   Provides access to the controls compartment.
2. **Top access panel**
   Provides access to the burner compartment.
3. **Air pressure switch**
   The air pressure switch detects blocked flue/vent conditions.
4. **Blower**
   The blower pulls in air and gas through the venturi (item 34). Air and gas mix inside the blower and is pushed into the burner, where they burn inside the combustion chamber.
5. **Boiler drain connection**
   Location from which the heat exchanger can be drained.
6. **Boiler inlet temperature sensor**
   The boiler inlet temperature sensor monitors system return water temperature. If selected as the controlling sensor, the control module will adjust the boiler firing rate so the inlet temperature matches the set point.
7. **Boiler outlet temperature sensor**
   The boiler outlet temperature sensor monitors boiler outlet water temperature. If selected as the controlling sensor, the control module will adjust the boiler firing rate so the outlet temperature matches the set point.
8. **Burner (not shown)**
   Single chamber design with a stress free metal fiber outer mesh and durable stainless steel structure. Provides firing rates up to 15:1 turndown (Model 751), 20:1 turndown (Models 1001 - 1251 and 2501 - 3501), 25:1 turndown (Models 1501 - 2001), 12:1 turndown (Model 4001) and 10:1 turndown (Models 5001 - 6001).
9. **Condensate drain connection**
   The condensate drain connection provides a connection point to install a condensate drain line using flexible hose provided.
10. **Control module (on control panel assembly)**
    The control module responds to internal and external signals and controls the blower, gas valves, and pump(s), depending on the application, to meet the heating demand.
11. **Electronic display**
    Digital controls with SMART TOUCH screen technology, full color display, and an 8" user interface screen.
12. **Flame inspection window**
    Two large high temperature quartz observation windows provide views of the burner surface during firing.
13. **Dual flame sensors (not shown)**
    Two flame sensors are provided to monitor the main burner and transition flame.
14. **Flue temperature sensor**
    The flue sensor monitors flue gas temperature. The control module will modulate or shut the boiler down if the flue gas temperature gets too high.
15. **Gas connection pipe**
    The gas connection pipe is a threaded black iron pipe connection (see Gas Connections Section for specific model pipe size requirements). This pipe should be connected to the incoming gas supply to deliver gas to the boiler.
16. **Gas shutoff valve (inside unit)**
    The manual gas shutoff valve is used to isolate the boiler gas train from the gas supply.
17. **Gas valves**
    The gas valves sense the negative pressure created by the blower, allowing gas to flow only if the gas valves are powered and combustion air is flowing.
18. **Condensate trap**
    The condensate trap is sized for a 1" PVC outlet connection pipe.
19. **High limit devices (primary and backup)**
    The high limit devices are used to monitor the outlet water temperature - if either device senses the water temperature exceeding the predetermined setting, the boiler will shut down.
20. **Ignition electrode**
    An electrical spark across the electrodes will ignite the burner.
21. **Line voltage junction box**
    The line voltage junction box contains the connection points for the line voltage power to the boiler (and pumps if used).
22. **Line voltage wiring connections (knockouts)**
    Conduit connection points for the high voltage junction box.
23. **Low gas pressure switch**
    Monitors gas supply pressure to the boiler and shuts the boiler down in the event a low gas pressure condition occurs.
24. **High gas pressure switch**
    Monitors gas supply pressure to the boiler and shuts the boiler down in the event a high gas pressure condition occurs.
25. **Low voltage connection board(s)**
    Connection boards used to connect external low voltage devices.
26. **Low voltage wiring connections (knockouts)**
    Conduit connection points for the low voltage connection boards.
27. **Low water cutoff probe (LWCO) (not shown)**
    Ensures adequate water is supplied to the boiler. In the event of inadequate water levels, the boiler will shut down.
28. **Power switch**
    The On/Off power switch provides the ability to turn line voltage power to the boiler on and off.
29. **Relief valve**
    The safety relief valve protects the heat exchanger from an over pressure condition. The boiler comes with a 50 PSI relief valve as standard equipment. Optional settings are available.
30. **Reset switch**
    Reset switch for the low water cutoff. Hold the switch for 10 seconds to reset.
31. **Test switch**
    The test switch permits manual triggering of the LWCO safety circuit to test the contacts and evaluate the integrity of the circuit. Hold the switch for 10 seconds to test.
32. **Firetube heat exchanger**
    High grade stainless steel WAVE™ firetube design that extracts heat from flue gases and transfers it directly into boiler water.
33. **Temperature and pressure gauge**
    Monitors the outlet temperature of the boiler as well as the system water pressure.
34. **Venturi**
    The venturi controls air and gas flow into the burner.
35. **Water inlet**
    An ANSI flange connects the return water from the system to the heat exchanger.
36. **Water outlet**
    An ANSI flange connects the hot water supply from the boiler to the system.
37. **Ignition transformer**
    The transformer provides voltage to the ignition electrode (item 20).
38. **Air arm temperature sensor (not shown)**
    Monitors fuel-air delivery temperature to the burner.
39. **Air inlet cover (shipped loose)**
    Used with room air for combustion and to prevent debris from entering the boiler.
40. **Fuses**
    A low resistance resistor that acts as a sacrificial device to provide over current protection, of either the load or source circuit.
41. **Air metering valve**
    The air metering valve is used to control the amount of air used when firing.
42. **Air metering valve air pressure switch**
    The air metering valve air pressure switch is used to ensure the air metering valve is open when firing gas valve 2.
43. **Proof of closure valve (not shown)**
    An additional safety shutoff valve with proof of closure contacts is used on the Crest 6.0 model **only**.
44. **Combustion measurement port**
    Access point for combustion analyzer probe.

The Crest - How it works... *(continued)*

NOTICE FBN1000 Series 100 model shown for illustration purposes only.

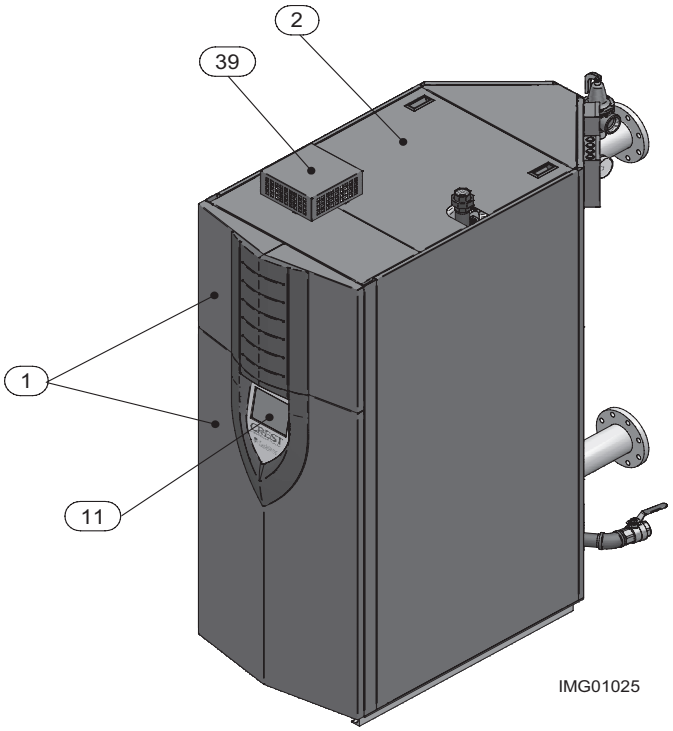

Front View

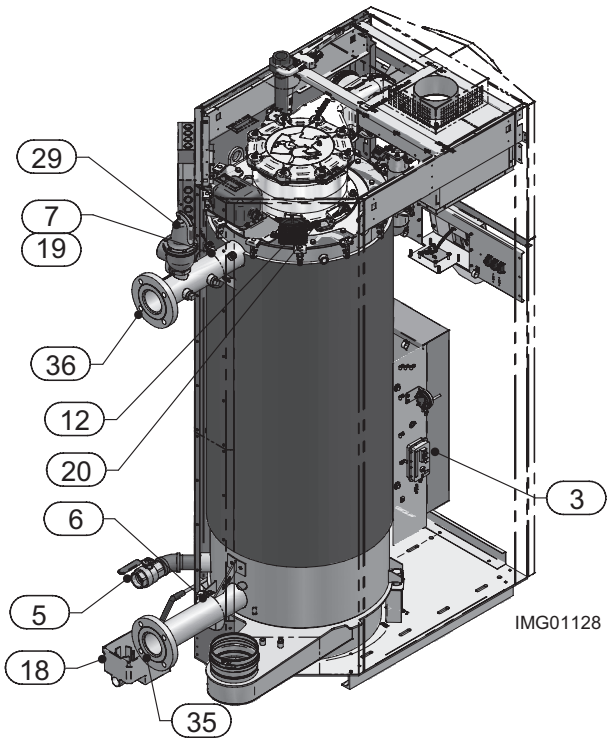

Rear View

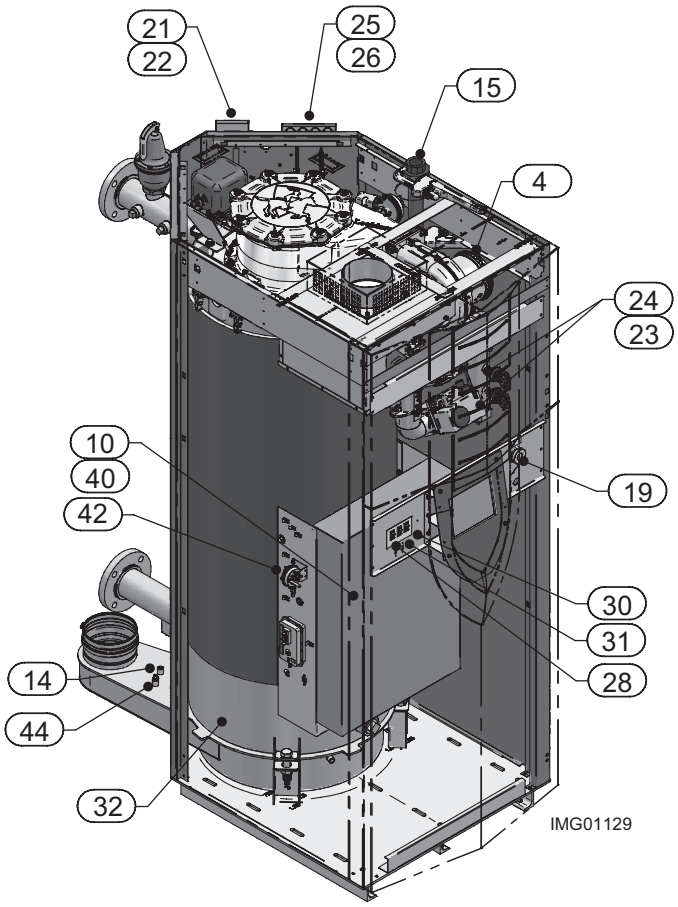

Left Side (inside unit)

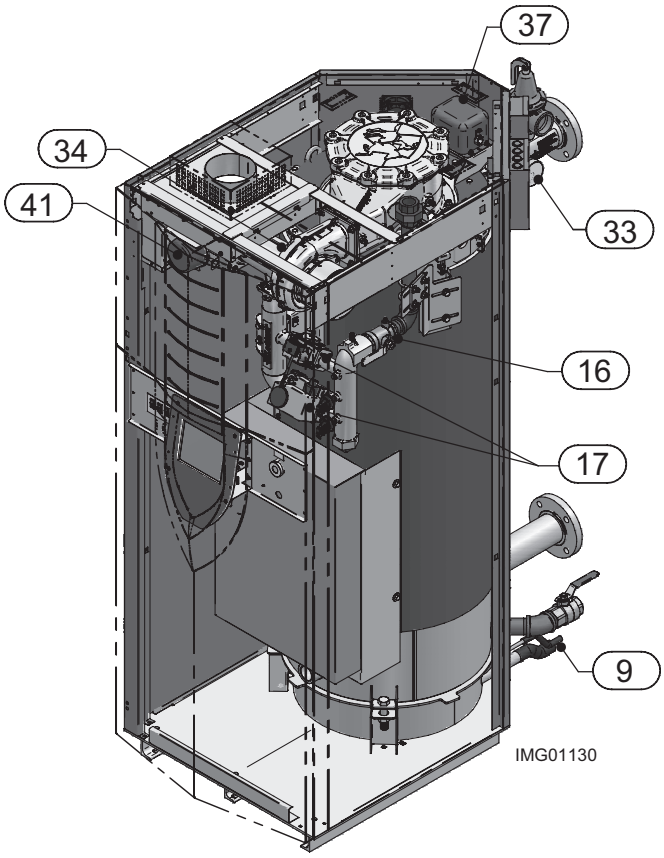

Right Side (inside unit)

Ratings

DESIGN CERTIFIED ® CERTIFIED ® ASME H DOE ENERGY STAR

AHRI CERTIFIED www.ahridirectory.org Crest AHRI Rating					Other Specifications						
Model Number Note: Change "N" to "L" for L.P. gas models.	Input MBH (Notes 4 - 6)		Gross Output MBH (Note 1)	Net AHRI Ratings Water, MBH (Note 2)	Appliance Water Content Gallons	Pipe Size Outlet	Pipe Size Inlet	Gas Inlet Size	Air Size	Vent Size (Note 3)	Weight w/Water (lbs.)
	Min	Max									
FB(N,L)0751	50	750	722	626	73	3"	3"	1 1/4"	6"	6"	1768
FB(N,L)1001	50	999	961	834	77	3"	3"	1 1/4"	6"	6"	1838
FB(N,L)1251	62.5	1250	1203	1043	87	3"	3"	1 1/2"	6"	8"	1975
FB(N,L)1501	60	1500	1443	1252	94	4"	4"	1 1/2"	8"	8"	2307
FB(N,L)1751	70	1750	1684	1461	106	4"	4"	1 1/2"	8"	8"	2458
FB(N,L)2001	80	1999	1923	1699	111	4"	4"	1 1/2"	8"	8"	2570
FB(N,L)2501	125	2500	2400	2087	157	4"	4"	2"	8"	9"	3600
FB(N,L)3001	150	3000	2883	2507	156	4"	4"	2"	10"	10"	3900
FB(N,L)3501	175	3500	3364	2925	202	4"	4"	2"	10"	10"	4600
FB(N,L)4001	333.3	3999	3843	3342	201	4"	4"	2 1/2"	12"	12"	5200
FB(N,L)5001	499.9	4999	4804	4177	254	6"	6"	2 1/2"	14"	14"	5900
FB(N,L)6001	600	6000	5766	5014	304	6"	6"	3"	14"	14"	6900

NOTICE Maximum allowed working pressure is located on the rating plate.

Notes:

1. The ratings are based on standard test procedures prescribed by the United States Department of Energy.
2. Net AHRI ratings are based on net installed radiation of sufficient quantity for the requirements of the building and nothing need be added for normal piping and pickup. Ratings are based on a piping and pickup allowance of 1.15.
3. Crest boilers require special gas venting. Use only the vent materials and methods specified in the Crest Installation and Operation Manual
4. Standard Crest boilers are equipped to operate from sea level to 4,500 feet only. The boiler will de-rate by 1.4% for each 1,000 feet above sea level up to 4,500 feet.
5. High altitude Crest Models 0751-2001 are equipped to operate from 3,000 to 12,000 feet only. The boiler will not de-rate up to 5,500 feet and will de-rate by 1.6% for each 1,000 feet above 5,500 feet.
6. High altitude Crest Models 2501-5001 are equipped to operate from 3,000 to 5,500 feet only. The boiler will not de-rate up to 5,500 feet.
7. High altitude Crest Model 6001 is equipped to operate from 3,000 to 5,500 feet only. The boiler will de-rate by 2% for each 1000 feet above sea level.
8. For Crest Models 2501-6001 installations above 5,500 feet contact the factory.
9. The operation given in this manual remains the same as the standard boilers. A high altitude label (as shown in FIG A.) is also affixed to the unit. De-rate values are based on proper combustion calibration and CO2's adjusted to the recommended levels.
10. Ratings have been confirmed by the Hydronics Section of AHRI.

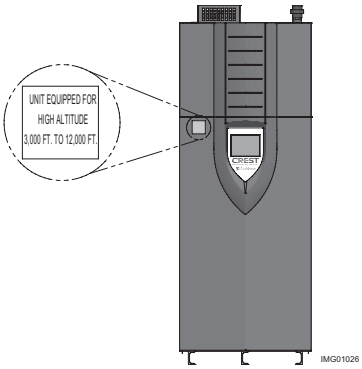

***Figure A** High Altitude Label Location*

1 Determine boiler location

Installation must comply with:

- Local, state, provincial, and national codes, laws, regulations, and ordinances.
- National Fuel Gas Code, NFPA 54 / ANSI Z223.1 – latest edition.
- Standard for Controls and Safety Devices for Automatically Fired Boilers, ANSI/ASME CSD-1 - latest edition, when required.
- National Electrical Code, NFPA 70 - latest edition.
- For Canada only: CSA B149.1 Installation Code, CSA C22.1 Canadian Electrical Code Part 1 and any local codes.

NOTICE The Crest gas manifold and controls met safe lighting and other performance criteria when the boiler underwent tests specified in ANSI Z21.13/CSA 4.9 – latest edition.

Before locating the boiler, check:

1. Check for nearby connection to:
   - System water piping
   - Venting connections
   - Gas supply piping
   - Electrical power
2. Locate the appliance so that if water connections should leak, water damage will not occur. When such locations cannot be avoided, it is recommended that a suitable drain pan, adequately drained, be installed under the appliance. The pan must not restrict combustion air flow. Under no circumstances is the manufacturer to be held responsible for water damage in connection with this appliance, or any of its components.
3. Check area around the boiler. Remove any combustible materials, gasoline and other flammable liquids.

⚠WARNING Failure to keep boiler area clear and free of combustible materials, gasoline, and other flammable liquids and vapors can result in severe personal injury, death, or substantial property damage.

4. The Crest must be installed so that gas control system components are protected from dripping or spraying water or rain during operation or service.
5. If a new boiler will replace an existing boiler, check for and correct system problems, such as:
   - System leaks causing oxygen corrosion or heat exchanger cracks from hard water deposits.
   - Incorrectly-sized expansion tank.
   - Lack of freeze protection in boiler water causing system and boiler to freeze and leak.
   - Debris left from existing piping, if not flushed and cleaned with an appropriate cleaner.
6. The appliance must be installed on a level floor, both front to back and side to side, for proper condensate drainage.
7. If the optional neutralizing kit is to be used, elevate the boiler at least 3" above the floor.
8. Check around the boiler for any potential air contaminants that could risk corrosion to the boiler or the boiler combustion air supply (see Table 1A on page 9). Prevent combustion air contamination. Remove any of these contaminants from the boiler area.

⚠WARNING DO NOT install units in rooms or environments that contain corrosive contaminants (see Table 1A on page 9). Failure to comply could result in severe personal injury, death, or substantial property damage.

⚠WARNING This appliance is certified as an indoor appliance. Do not install the appliance outdoors or locate where the appliance will be exposed to freezing temperatures.

Do not install the appliance where condensation may form on the inside or outside of the appliance, or where condensation may fall onto the appliance.

Failure to install the appliance indoors could result in severe personal injury, death, or substantial property damage.

⚠WARNING This appliance requires a special venting system. Use only the vent materials specified in this manual. Failure to follow all instructions can result in flue gas spillage and carbon monoxide emissions, causing severe personal injury or death.

Provide clearances:

Clearances from combustible materials

- Hot water pipes ..... 1/4"
- Sides ..... 0"
- Rear ..... 0"
- Front ..... 0"
- Top ..... 0"
- Floor ..... Combustible
- Vent pipe - Follow special vent system manufacturer's instructions

Figure 1-1 *Clearances*

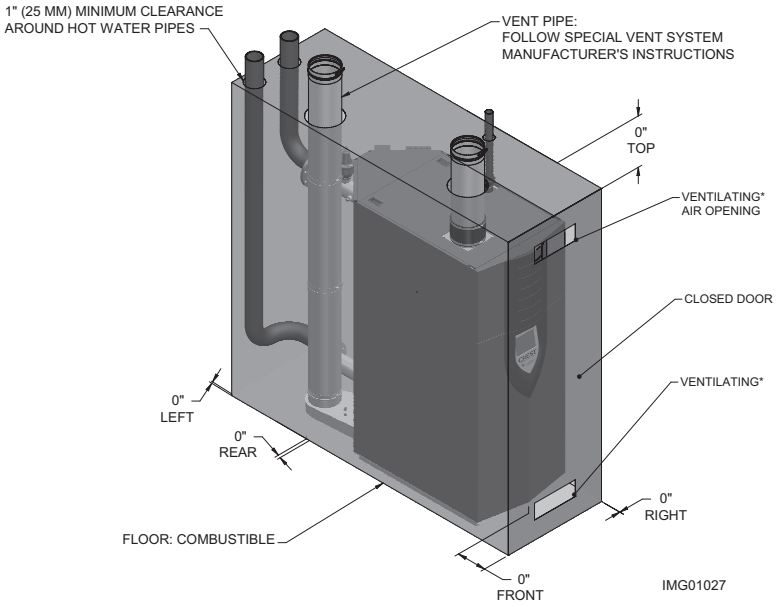

1 Determine boiler location

NOTICE If you do not provide the recommended service clearances shown, it may not be possible to service the boiler without removing it from the space.

Recommended clearances for service access

- Sides ..... 24"
- Rear ..... 24"
- Front ..... 30"
- Top ..... 24"

Maintain minimum specified clearances for adequate operation. All installations must allow sufficient space for servicing the vent connections, water pipe connections, piping and other auxiliary equipment, as well as the appliance. The clearance labels on each appliance note the same service and combustible clearance requirements as shown in this manual.

Multiple boilers may be installed side by side with no clearance between adjacent boilers because this boiler is approved for zero clearance from combustible surfaces; however, service access will be limited from the sides.

Consult the *Venting* section of this manual for specific installation instructions for the appropriate type of venting system that you will be using.

Provide air openings to room:

The Crest alone in boiler room

1. No air ventilation openings into the boiler room are needed when clearances around the Crest are at least equal to the SERVICE clearances shown in FIG. 1-1. For spaces that do NOT supply this clearance, provide two openings as shown in FIG. 1-1. Each opening must provide one square inch free area per 1,000 Btu/hr of boiler input.
2. Combustion air openings are required when using the Room Air Option on page 28 of this manual.

The Crest in same space with other gas or oil-fired appliances

1. Follow the National Fuel Gas Code (U.S.) or CSA B149.1 (Canada) to size/verify size of the combustion/ventilation air openings into the space.

⚠WARNING The space must be provided with combustion/ventilation air openings correctly sized for all other appliances located in the same space as the Crest.

Failure to comply with the above warnings could result in severe personal injury, death, or substantial property damage.

2. Size openings only on the basis of the other appliances in the space. No additional air opening free area is needed for the Crest when it takes its combustion air from outside (direct vent installation).

Flooring and foundation

Flooring

The Crest is approved for installation on combustible flooring, but must never be installed on carpeting.

⚠WARNING Do not install the boiler on carpeting even if foundation is used. Fire can result, causing severe personal injury, death, or substantial property damage.

If flooding is possible, elevate the boiler sufficiently to prevent water from reaching the boiler.

⚠WARNING Assure that the floor and structure is sufficient to support the installed weight of the boiler, including the water content in the heat exchanger. If not, structural building failure will result, causing severe personal injury, death, or substantial property damage.

Vent and air piping

The Crest requires a special gas vent system, designed for pressurized venting.

The boiler is to be used for either direct vent installation or for installation using indoor combustion air. When room air is considered, see page 28 of this manual. Note prevention of combustion air contamination below when considering vent/air termination.

Vent and air must terminate near one another and may be vented vertically through the roof or out a side wall, unless otherwise specified. You may use any of the vent/air piping methods covered in this manual. Do not attempt to install the Crest using any other means.

Be sure to locate the boiler such that the vent and air piping can be routed through the building and properly terminated. The vent/air piping lengths, routing and termination method must all comply with the methods and limits given in this manual.

Prevent combustion air contamination

Install air inlet piping for the Crest as described in this manual. Do not terminate vent/air in locations that can allow contamination of combustion air. Refer to Table 1A, page 9 for products and areas which may cause contaminated combustion air.

⚠WARNING Ensure that the combustion air will not contain any of the contaminants in Table 1A, page 9. Contaminated combustion air will damage the boiler, resulting in possible severe personal injury, death or substantial property damage. Do not pipe combustion air near a swimming pool, for example. Also, avoid areas subject to exhaust fumes from laundry facilities. These areas will always contain contaminants.

1 Determine boiler location *(continued)*

When using an existing vent system to install a new boiler:

⚠WARNING Failure to follow all instructions can result in flue gas spillage and carbon monoxide emissions, causing severe personal injury or death.

Check the following venting components before installing:

- **Material** - For materials listed for use with this appliance, see Section 2 - General Venting, Table 2A-1. For stainless steel venting, an adapter of the same manufacturer (Table 2B) may be used at the flue collar connection.
- **Size** - To ensure proper pipe size is in place, see Table 2C. Check to see that this size is used throughout the vent system.
- **Manufacturer** - Only use the listed manufacturers and their type product listed in Table 2A-1 for CAT IV positive pressure venting with flue producing condensate.
- **Supports** - Non-combustible supports must be in place allowing a minimum 1/4" rise per foot. The supports should adequately prevent sagging and vertical slippage, by distributing the vent system weight. For additional information, consult the vent manufacturer's instructions for installation.
- **Terminations** - Carefully review Sections 2 through 4 to ensure requirements for the location of the vent and air terminations are met and orientation of these fit the appropriate image from the Sidewall or Vertical options listed in the General Venting Section.
- **Seal** - With prior requirements met, the system should be tested to the procedure listed in parts (c) through (f) of the Removal of an Existing Boiler Section on page 10.

With stainless steel vent, seal and connect all pipe and components as specified by the vent manufacturer used.

⚠WARNING If any of these conditions are not met, the existing system must be updated or replaced for that concern. Failure to follow all instructions can result in flue gas spillage and carbon monoxide emissions, causing severe personal injury or death.

***Table 1A** Corrosive Contaminants and Sources*

Products to avoid:
Spray cans containing chloro/fluorocarbons
Permanent wave solutions
Chlorinated waxes/cleaners
Chlorine-based swimming pool chemicals
Calcium chloride used for thawing
Sodium chloride used for water softening
Refrigerant leaks
Paint or varnish removers
Hydrochloric acid/muriatic acid
Cements and glues
Antistatic fabric softeners used in clothes dryers
Chlorine-type bleaches, detergents, and cleaning solvents found in household laundry rooms
Adhesives used to fasten building products and other similar products
Areas likely to have contaminants
Dry cleaning/laundry areas and establishments
Swimming pools
Metal fabrication plants
Beauty shops
Refrigeration repair shops
Photo processing plants
Auto body shops
Plastic manufacturing plants
Furniture refinishing areas and establishments
New building construction
Remodeling areas
Garages with workshops

1 Determine boiler location

When removing a boiler from existing common vent system:

DANGER Do not install the Crest into a common vent with any other appliance except as noted in Section 2 on page 20. This will cause flue gas spillage or appliance malfunction, resulting in possible severe personal injury, death, or substantial property damage.

⚠WARNING Failure to follow all instructions can result in flue gas spillage and carbon monoxide emissions, causing severe personal injury or death.

At the time of removal of an existing boiler, the following steps shall be followed with each appliance remaining connected to the common venting system placed in operation, while the other appliances remaining connected to the common venting system are not in operation.

a. Seal any unused openings in the common venting system.

b. Visually inspect the venting system for proper size and horizontal pitch and determine there is no blockage or restriction, leakage, corrosion, or other deficiencies, which could cause an unsafe condition.

c. Test vent system – Insofar as is practical, close all building doors and windows and all doors between the space in which the appliances remaining connected to the common venting system are located and other spaces of the building. Turn on clothes dryers and any appliance not connected to the common venting system. Turn on any exhaust fans, such as range hoods and bathroom exhausts, so they will operate at maximum speed. Do not operate a summer exhaust fan. Close fireplace dampers.

d. Place in operation the appliance being inspected. Follow the lighting instructions. Adjust thermostat so appliance will operate continuously.

e. Test for spillage at the draft hood relief opening after 5 minutes of main burner operation. Use the flame of a match or candle, or smoke from a cigarette, cigar, or pipe.

f. After it has been determined that each appliance remaining connected to the common venting system properly vents when tested as outlined herein, return doors, windows, exhaust fans, fireplace dampers, and any other gas-burning appliance to their previous conditions of use.

g. Any improper operation of the common venting system should be corrected so the installation conforms with the National Fuel Gas Code, ANSI Z223.1/NFPA 54 and/or CAN/CSA B149.1, Natural Gas and Propane Installation Code. When re-sizing any portion of the common venting system, the common venting system should be resized to approach the minimum size as determined using the appropriate tables in Part 11 of the National Fuel Gas Code, ANSI Z223.1/NFPA 54 and/or CAN/CSA B149.1, Natural Gas and Propane Installation Code.

Remove boiler from wood pallet

1. After removing the outer shipping crate and plastic from the boiler, remove the parts package (packaged parts inside the controls compartment of the boiler inside the lower front access panel).

2. To remove the boiler from the pallet:

a. Remove the three (3) shipping bolts located inside the controls compartment securing the boiler to the front of the pallet (see FIG. 1-2).

b. Remove the three (3) shipping bolts that fasten the tie-down brackets securing the legs to the rear of the pallet (FIG. 1-2).

c. The boiler can now be removed from the pallet using a lift truck lifting from the front or rear of the boiler. If lifting from the front, the lift truck forks must extend at least half way under the boiler heat exchanger to assure proper lifting technique with no damage to the boiler.

⚠WARNING Failure to assure the truck forks are long enough to extend at least halfway under the boiler heat exchanger will result in the boiler tipping off the lift truck, and potentially falling. This will result in severe personal injury, death, or substantial property damage.

d. If lifting by crane is desired, remove the top access panels to gain access to the lifting lugs located on the boiler (see FIG. 1-3). It is also recommended that the upper and lower front panels along with both front side panels be removed (no tools required).

NOTICE Do not drop the boiler or bump the jacket on the floor or pallet. Damage to the boiler can result.

1 Determine boiler location *(continued)*

Figure 1-2 *Boiler Mounted on Shipping Pallet*

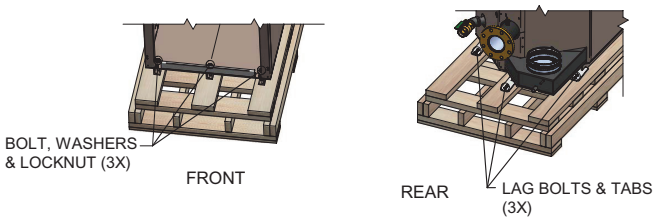

Figure 1-3 *Boiler Removed from Shipping Pallet*

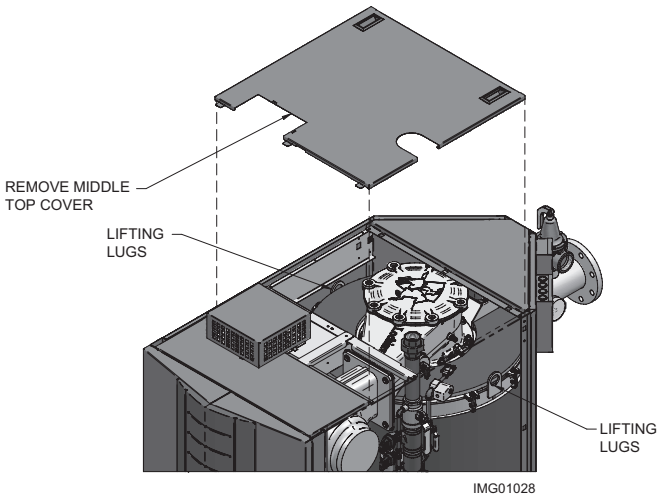

Combustion and ventilation air requirements for appliances drawing air from the equipment room

Provisions for combustion and ventilation air must be in accordance with Air for Combustion and Ventilation, of the latest edition of the National Fuel Gas Code, NFPA 54 / ANSI Z223.1, in Canada, the latest edition of CGA Standard B149 Installation Code for Gas Burning Appliances and Equipment, or applicable provisions of the local building codes.

The equipment room MUST be provided with properly sized openings and/or be of sufficient volume to assure adequate combustion air and proper ventilation for all gas fired appliances in the equipment room to assure adequate combustion air and proper ventilation.

The requirements shown are for the **appliance only**; additional gas fired appliances in the equipment room will require an increase in the net free area and/or volume to supply adequate combustion air for all appliances.

No combustion air openings are needed when the appliance is installed in a space with a volume **NO LESS** than 50 cubic feet per 1,000 Btu/hr of all installed gas fired appliances and the building **MUST NOT be of "Tight Construction"**[3].

A combination of indoor and outdoor combustion air may be utilized by applying a ratio of available volume to required volume times the required outdoor air opening(s) size(s). This must be done in accordance with the National Fuel Gas Code, NFPA 54 / ANSI Z223.1.

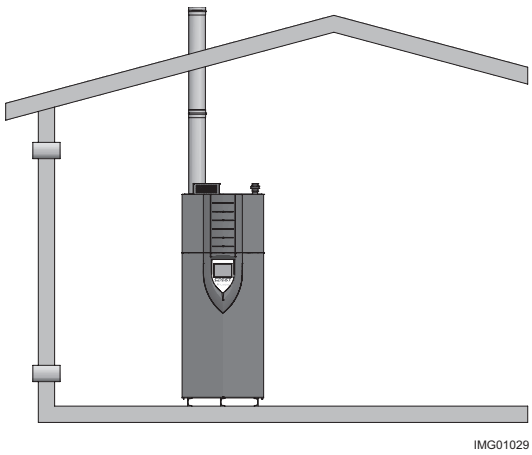

Figure 1-4_*Combustion Air Direct from Outside*

1. If air is taken directly from outside the building with no duct, provide two permanent openings to the equipment room each with a net free area of one square inch per 4000 Btu/hr input (5.5 cm^2 per kW) (see FIG. 1-4).

1 Determine boiler location

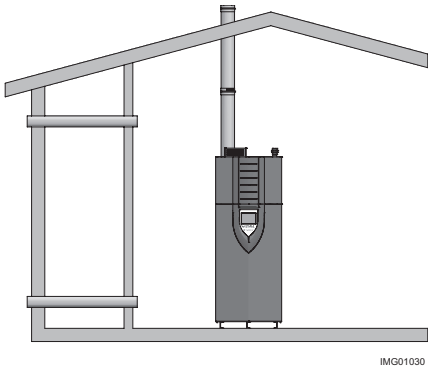

***Figure 1-5**_Combustion Air Through Ducts*

2. If combustion and ventilation air is taken from the outdoors using a duct to deliver the air to the equipment room, each of the two openings should be sized based on a minimum free area of one square inch per 2000 Btu/hr (11 cm^2 per kW) of input (see FIG. 1-5).

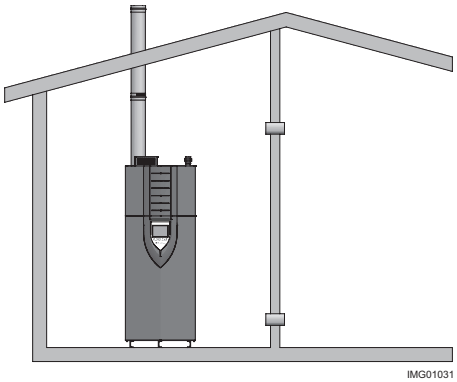

***Figure 1-6**_Combustion Air from Interior Space*

3. If air is taken from another interior space combined with the equipment room:

(a) Two spaces on same story: Each of the two openings specified above should have a net free area of one square inch for each 1000 Btu/hr (22 cm^2 per kW) of input, but not less than 100 square inches (645 cm^2) (see FIG. 1-6).

(b) Two spaces on different stories: One or more openings should have a net free area of two square inches per 1000 Btu/hr (44 cm^2 per kW).

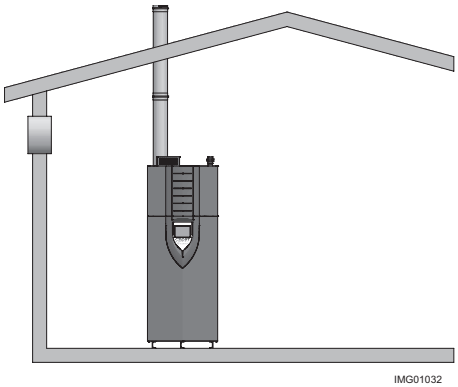

***Figure 1-7**_Combustion Air from Outside - Single Opening*

4. If a single combustion air opening is provided to bring combustion air in directly from the outdoors, the opening must be sized based on a minimum free area of one square inch per 3000 Btu/hr (7 cm^2 per kW). This opening must be located within 12” (30 cm) of the top of the enclosure (see FIG. 1-7).

Combustion air requirements are based on the latest edition of the National Fuel Gas Code, NFPA 54 / ANSI Z223.1; in Canada refer to the latest edition of CGA Standard CAN/CSA B149.1. Check all local code requirements for combustion air.

All dimensions based on net free area in square inches. Metal louvers or screens reduce the free area of a combustion air opening a minimum of approximately 25%. Check with louver manufacturers for exact net free area of louvers.

Where two openings are provided, one must be within 12" (30 cm) of the ceiling and one must be within 12" (30 cm) of the floor of the equipment room. Each opening must have a net free area as specified in Table 1B. Single openings shall commence within 12" (30 cm) of the ceiling. The minimum dimension of air openings shall not be less than 3" (80 mm).

⚠ CAUTION Under no circumstances should the equipment room ever be under negative pressure. Particular care should be taken where exhaust fans, attic fans, clothes dryers, compressors, air handling units, etc., may take away air from the unit.

The combustion air supply must be completely free of any flammable vapors that may ignite or chemical fumes which may be corrosive to the appliance. Common corrosive chemical fumes which must be avoided are fluorocarbons and other halogenated compounds, most commonly present as refrigerants or solvents, such as Freon, trichlorethylene, perchlorethylene, chlorine, etc. These chemicals, when burned, form acids which quickly attack the stainless steel heat exchanger, headers, flue collectors, and the vent system.

The result is improper combustion and a non-warrantable, premature appliance failure.

EXHAUST FANS: Any fan or equipment which exhausts air from the equipment room may deplete the combustion air supply and/or cause a downdraft in the venting system. Spillage of flue products from the venting system into an occupied living space can cause a very hazardous condition that must be corrected immediately.

1 Determine boiler location *(continued)*

TABLE - 1B MINIMUM RECOMMENDED COMBUSTION AIR SUPPLY TO EQUIPMENT ROOM								
Model Number	FIG. 1-4		FIG. 1-5		FIG. 1-6			FIG. 1-7
	*Outside Air from 2 Openings Directly from Outdoors[1]		*Outside Air from 2 Ducts Delivered from Outdoors[1]		Inside Air from 2 Ducts Delivered from Interior Space[2]			*Outside Air from 1 Opening Directly from Outdoors, in² (cm²)[1]
					Same Story		Different Stories	
	Top Opening, in² (cm²)	Bottom Opening, in² (cm²)	Top Opening, in² (cm²)	Bottom Opening, in² (cm²)	Top Opening, in² (cm²)	Bottom Opening, in² (cm²)	Total Openings, in² (cm²)	
FB 0751	188 (1213)	188 (1213)	375 (2420)	375 (2420)	750 (4839)	750 (4839)	1500 (9678)	250 (1613)
FB 1001	250 (1613)	250 (1613)	500 (3226)	500 (3226)	1000 (6452)	1000 (6452)	2000 (12904)	333 (2149)
FB 1251	313 (2020)	313 (2020)	625 (4033)	625 (4033)	1250 (8065)	1250 (8065)	2500 (16129)	417 (2691)
FB 1501	375 (2420)	375 (2420)	750 (4839)	750 (4839)	1500 (9678)	1500 (9678)	3000 (19355)	500 (3226)
FB 1751	438 (2826)	438 (2826)	875 (5646)	875 (5646)	1750 (11291)	1750 (11291)	3500 (22581)	583 (3762)
FB 2001	500 (3226)	500 (3226)	1000 (6452)	1000 (6452)	2000 (12904)	2000 (12904)	4000 (25807)	667 (4304)
FB 2501	625 (4033)	625 (4033)	1250 (8065)	1250 (8065)	2500 (16129)	2500 (16129)	5000 (32258)	833 (5381)
FB 3001	750 (4839)	750 (4839)	1500 (9678)	1500 (9678)	3000 (19355)	3000 (19355)	6000 (38710)	1000 (6452)
FB 3501	875 (5646)	875 (5646)	1750 (11291)	1750 (11291)	3500 (22581)	3500 (22581)	7000 (45162)	1167 (7530)
FB 4001	1000 (6450)	1000 (6450)	2000 (12900)	2000 (12900)	4000 (25800)	4000 (25800)	8000 (51600)	1333 (8600)
FB 5001	1250 (8062)	1250 (8062)	2500 (16129)	2500 (16129)	5000 (32250)	5000 (32250)	10000 (64500)	1667 (10750)
FB 6001	1500 (9677)	1500 (9677)	3000 (19355)	3000 (19355)	6000 (38710)	6000 (38710)	12000 (77419)	2000 (12903)

The above requirements are for the **appliance only**; additional gas fired appliances in the equipment room will require an increase in the net free area and/or volume to supply adequate combustion air for all appliances.

No combustion air openings are needed when the appliance is installed in a space with a volume NO LESS than 50 cubic feet per 1,000 Btu/hr of all installed gas fired appliances. **Buildings MUST NOT be of *"Tight Construction"[3].**

[1]Outside air openings shall directly communicate with the outdoors.

[2]Combined interior space must be 50 cubic feet per 1,000 Btu/hr input. **Buildings MUST NOT be of *"Tight Construction".**

[3]**"Tight Construction"** is defined as a building with less than 0.40 ACH (air changes per hour). For buildings of **"Tight Construction"**, provide air openings into the building from outside.

Combustion air filter

This unit has a standard air filter located at the combustion air inlet. This air filter is provided to help ensure clean air is used for the combustion process. Check this filter every month and replace when it becomes dirty. You can find these commercially available filters at any home center or HVAC supply store.

Filters by model sizes:

FBN0751-1251 / 14 x 14 x 1 filter
FBN1501-3501 / 16 x 20 x 1 filter
FBN4001-6001 / 20 x 24 x 1 filter

Note: Replacement filter should have a MERV rating no greater than 4.

Follow the steps below when replacing the combustion air filter:

1. Locate the combustion air filter box.
2. Lift and remove the air filter box cover to gain access to the air filter.
3. Slide the air filter out the top of the air filter box.
4. Inspect the air filter for dirt and debris, replace if necessary.
5. Replace the air filter and the air filter box cover.

NOTICE During construction the air filter should be checked more frequently to ensure it does not become clogged with combustion dirt and debris.

CAUTION Sustained operation of an appliance with a clogged burner may result in nuisance operational problems, bad combustion, and non-warrantable component failures.

2 General venting

Direct venting

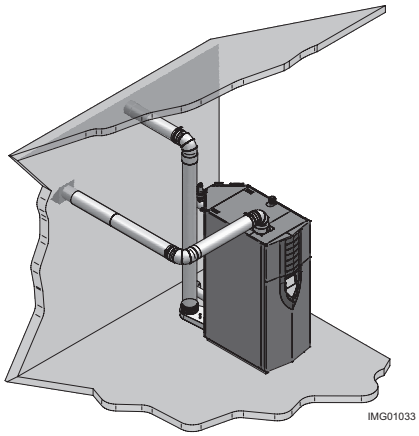

Sidewall

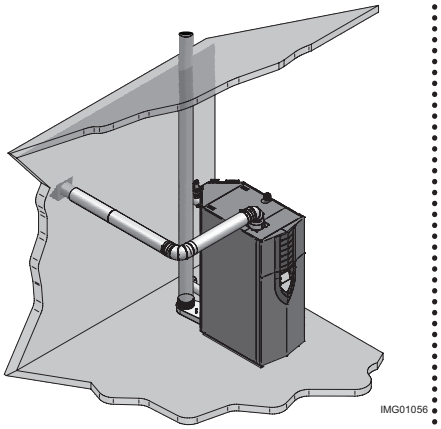

Vertical Vent, Sidewall Air

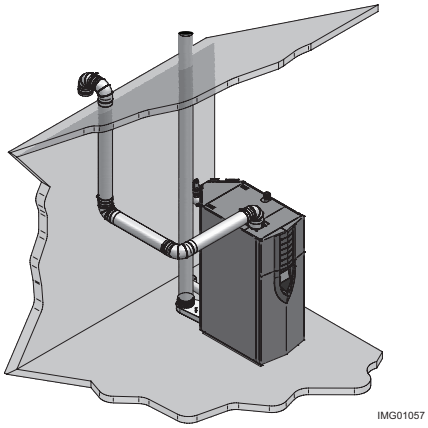

Vertical

Optional room air

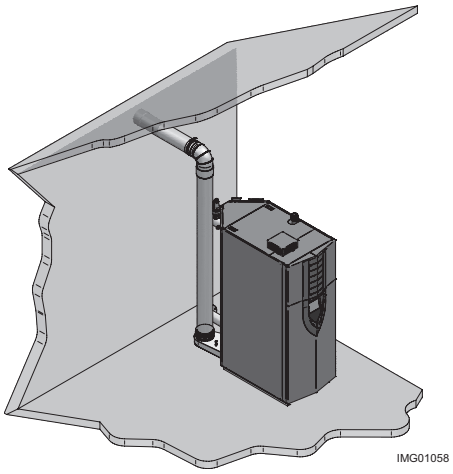

Sidewall

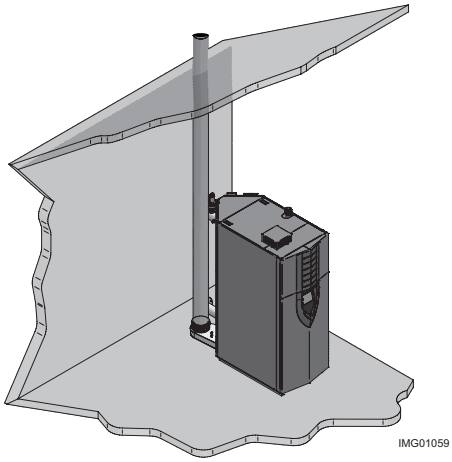

Vertical

2 General venting *(continued)*

Install vent and combustion air piping

DANGER The Crest must be vented and supplied with combustion and ventilation air as described in this section. Ensure the vent and air piping and the combustion air supply comply with these instructions regarding vent system, air system, and combustion air quality. See also Section 1 of this manual.

Inspect finished vent and air piping thoroughly to ensure all are airtight and comply with the instructions provided and with all requirements of applicable codes.

Failure to provide a properly installed vent and air system will cause severe personal injury or death.

Air inlet pipe materials:

The air inlet pipe(s) must be sealed. Choose acceptable combustion air inlet pipe materials from the following list:

ABS, PVC, or CPVC
Dryer Vent or Sealed Flexible Duct (not recommended for rooftop air inlet)
Galvanized steel vent pipe with joints and seams sealed as specified in this section.
Type "B" double-wall vent with joints and seams sealed as specified in this section.
AL29-4C, stainless steel material to be sealed to specification of its manufacturer.

*Plastic pipe may require an adapter (not provided) to transition between the air inlet connection on the appliance and the plastic air inlet pipe.

⚠WARNING Using vent or air intake materials other than those specified, failure to properly seal all seams and joints or failure to follow vent pipe manufacturer's instructions can result in personal injury, death or property damage. Mixing of venting materials will void the warranty and certification of the appliance.

NOTICE The use of double-wall vent or insulated material for the combustion air inlet pipe is recommended in cold climates to prevent the condensation of airborne moisture in the incoming combustion air.

Sealing of Type "B" double-wall vent material or galvanized vent pipe material used for air inlet piping on a sidewall or vertical rooftop Combustion Air Supply System:

a. Seal all joints and seams of the air inlet pipe using either Aluminum Foil Duct Tape meeting UL Standard 723 or 181A-P or a high quality UL Listed silicone sealant such as those manufactured by Dow Corning or General Electric.

b. Do not install seams of vent pipe on the bottom of horizontal runs.

c. Secure all joints with a minimum of three sheet metal screws or pop rivets. Apply Aluminum Foil Duct Tape or silicone sealant to all screws or rivets installed in the vent pipe.

d. Ensure that the air inlet pipes are properly supported.

The PVC, CPVC, or ABS air inlet pipe should be cleaned and sealed with the pipe manufacturer's recommended solvents and standard commercial pipe cement for the material used. The ABS, PVC, CPVC, Dryer Vent or Flex Duct air inlet pipe should use a silicone sealant to ensure a proper seal at the appliance connection and the air inlet cap connection. Dryer vent or flex duct should use a screw type clamp to seal the vent to the appliance air inlet and the air inlet cap. Proper sealing of the air inlet pipe ensures that combustion air will be free of contaminants and supplied in proper volume.

2 General venting

When a sidewall or vertical rooftop combustion air supply system is disconnected for any reason, the air inlet pipe must be resealed to ensure that combustion air will be free of contaminants and supplied in proper volume.

DANGER Failure to properly seal all joints and seams as required in the air inlet piping may result in flue gas recirculation, spillage of flue products and carbon monoxide emissions causing severe personal injury or death.

Vent and air piping

The Crest is certified as a Category II/IV boiler. **This product has been approved for use with stainless steel vent systems.** All venting systems used with a Crest boiler must be suitable for Category IV operation except for factory approved common vent systems operating as allowed in the Common Venting Section on page 20.

⚠WARNING Use only the materials, vent systems, and terminations listed in Table 2A-1. DO NOT mix vent systems of different types or manufacturers, unless listed in this manual. Failure to comply could result in severe personal injury, death, or substantial property damage.

NOTICE Installations must comply with applicable national, state, and local codes. Stainless steel vent systems must be listed as a UL-1738 approved system for the United States and a ULC-S636 approved system for Canada.

NOTICE Installation of a stainless steel vent system should adhere to the stainless steel vent manufacturer's installation instructions supplied with the vent system.

NOTICE The Crest is supplied with an integral FasNSeal vent connector (FIG. 2-1). The installer must use a specific vent starter adapter supplied by the vent manufacturer to adapt to different vent systems.

Air intake/vent connections

1. **Combustion Air Intake Connector** (FIG. 2-1) - Used to provide combustion air directly to the unit from outdoors. A fitting is provided with the unit for final connection. Combustion air piping must be supported per guidelines listed in the National Mechanical Code, Section 305, Table 305.4 or as local codes dictate.
2. **Vent Connector** (FIG. 2-1) - Used to provide a passageway for conveying combustion gases to the outside. A transition fitting is provided on the unit for final connection. Vent piping must be supported per the National Building Code, Section 305, Table 305.4 or as local codes dictate.

Figure 2-1 *Combustion Air Adapter*

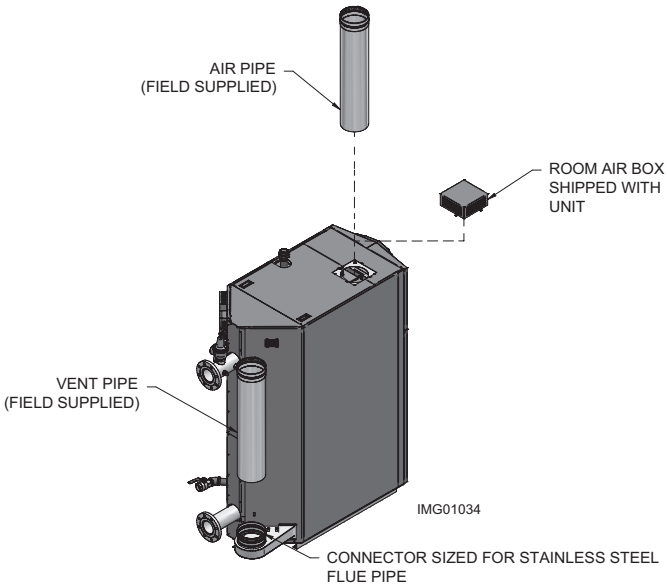

The Crest uses model specific combustion air intake and vent piping sizes as detailed in Tables 2B and 2C on page 18.

NOTICE Increasing or decreasing combustion air or vent piping to sizes not specified in this manual is not authorized.

Table 2A-1 *Approved Stainless Steel Vent Manufacturers*

Approved Stainless Steel Vent Manufacturers	
Make	**Model**
ProTech Systems (Dura-Vent Co.)	FasNSeal Vent
Z-Flex (Nova Flex Group)	Z-Vent
Heat Fab (Selkirk Corporation)	Saf-T Vent
Metal Fab	Corr/Guard
Securities Chimneys International	Secure Seal SS
DuraVent	DuraSeal DS
Schebler Chimney Systems	eVent
ICC	VIC
Jeremias	--
Enervex	Powerstack
Van Packer	--

2 General venting *(continued)*

Table 2A-2 *Approved Stainless Steel Terminations and Adapters - Category IV*

Model	ProTech		Z Flex		Heat Fab		
	Adapter	Intake	Adapter	Intake	Adapter	Flue	Intake
751-1001	Not Required	810003269	2SVSAFNS06	2SVEE0690	9601MAD	CCK06TM	9690 / 9692
1251	*See note	810003281	2SVSAFNS06	2SVEE0690	9801MAD	CCK08TM	9690 / 9692
1501-2001	*See note	810003357 / 810003369	2SVSAFNS08	2SVEE0890	9801MAD	CCK08TM	9890 / 9892

Model	Metal-Fab			Security Chimney			ICC		
	Adapter	Flue	Intake	Adapter	Flue	Intake	Adapter	Flue	Intake
751-1001	6FCGPVCA	MC 6-36"	6FCGSW90L	SS6PVCU	SS0MCU 4" - 24"	SS6ST90AU SSD0STAUK 4" - 24"	HM-06CA78	HM-06SCR-F HM-06RC-F	HE-06E90-F HM-06SCR-F
1251	8FCGLCA	MC 6-36"	6FCGSW90L	SS8CRESTU	SS0MCU 4" - 24"	SS6ST90AU SSD0STAUK 4" - 24"	HM-08CA78	HM-08SCR-F HM-08MC-F	HE-06E90-F HM-06SCR-F
1501-2001	8FCGLCA	MC 6-36"	8FCGSW90	SS8CRESTU	SS0MCU 4" - 24"	SSE8E9OU SD0STAUK 4" - 24"	HM-08CA78	HM-08SCR-F HM-08MC-F	HE-08E90-F HM-08SCR-F

Model	Jeremias			DuraVent		
	Adapter	Flue	Intake	Adapter	Flue	Intake
751-1001	SWKL6-KLC	SWKL6-WRC	SWKL6-90ET	DS6PVCU	DS0MCU 4" - 24"	DS6ST90AU DSD0STAUK 4" - 24"
1251	SWKL8-KLC	SWKL8-WRC	SWKL6-90ET	DS8CRESTU	DS0MCU 4" - 24"	DS6ST90AU DSD0STAUK 4" - 24"
1501-2001	SWKL8-KLC	SWKL8-WRC	SWKL8-90ET	DS8CRESTU	DS0MCU 4" - 24"	DSE8E90U DS0ST90AUK 4" - 24"

*No adapter needed when using 8” FasNSeal vent length.

*Models 1251 - 1501: For installations using a 6 inch vent, use the adapter from Table 2A-2 for the appropriate vent system manufacturer, then use the manufacturer’s tapered reducing adapter from 8 inch to 6 inch diameter to continue system. If using a DuraVent vent system, factory KIT #100295900 is available. For Models 751-1001, reference the manufacturer’s part number provided.

2 General venting

Table 2A-2 *Approved Stainless Steel Terminations and Adapters - Category IV (continued)*

Model	ProTech		Z Flex		Heat Fab		
	Adapter	Intake	Adapter	Intake	Adapter	Flue	Intake
2501	*See note	810003397 / 810003409	2SVSAFNS09	2SVEE990	9901MAD	CCK09TM	9890 / 9992
3001 - 3501	*See note	810003435 / 810003447	2SVSAFNS10	2SVEE1090	91001MAD	CCK10TM	91090 / 91092
4001	*See note	810003476 / 810003488	2SVSAFNS12	2SVEE1290	91201MAD	CCK12TM	91290 / 91292
5001 - 6001	*See note	810003516 / 810003528	2SVSAFNS14	2SVEE1490	91401MAD	CCK14TM	91490 / 91492

Model	Metal-Fab			Security Chimney			ICC		
	Adapter	Flue	Intake	Adapter	Flue	Intake	Adapter	Flue	Intake
2501	8FCGLCA	MC 6-36"	8FCGSW90	SS9CRESTU	SS0MCU 4" - 24"	SSE9E9OU SDOST90AUK 4" - 10"	HM-09CA78	HM-09SCR-F HM-09MC-F	HE-08E90-F HM-08SCR-F
3001 - 3501	10FCGLCA	MC 6-36"	10FCGSW90	SS10CRESTU	SS0MCU 4" - 24"	SSE10E9OU SDOST90AUK 4" - 10"	HM-10CA78	HM-10SCR-F HM-10MC-F	HE-10E90-F HM-10SCR-F
4001	12FCGLCA	MC 6-36"	12FCGSW90	SS12CRESTU	SS0MCU 4" - 24"	SSE12E9OU	HM-12CA78	HM-12SCR-F HM-12MC-F	HE-12E90-F HM-12SCR-F
5001 - 6001	14FCGLCA	MC 6-36"	14FCGSW90	SS14CRESTU	SS0MCU 4" - 24"	SSE14E9OU	HM-14CA78	HM-14SCR-F HM-14MC-F	HE-14E90-F HM-14SCR-F

Model	Jeremias			DuraVent		
	Adapter	Flue	Intake	Adapter	Flue	Intake
2501	SWKL9-KLC	SWKL9-WRC	SWKL9-90ET	DS9CRESTU	DS0MCU 4" - 24"	DSE9E90U DS0ST90AUK 4” - 10”
3001 - 3501	SWKL10-KLC	SWKL10-WRC	SWKL10-90ET	DS10CRESTU	DS0MCU 4" - 24"	DSE10E90U DS0ST90AUK 4” - 10”
4001	SWKL12-KLC	SWKL12-WRC	SWKL12-90ET	DS12CRESTU	DS0MCU 4" - 24"	DSE12E90U
5001 - 6001	SWKL14-KLC	SWKL14-WRC	SWKL14-90ET	DS14CRESTU	DS0MCU 4" - 24"	DSE14E90U

*No adapter needed when using Standard FNS Vent Length

2 General venting

Table 2A-2 *Approved Stainless Steel Terminations and Adapters - Category IV (continued)*

Model	Enervex			Van Packer	
	Adapter	Flue	Intake	Adapter	Intake
751-1001	801.0676.4706	801.0679.XX06	801.0676.0406	MM06MOAB	MM0690EB & M06SCTB
1251	801.0676.4708	801.0679.XX08	801.0676.0408	MM08MOAB	M0690EB & M06SCTB
1501-2001	801.0676.4708	801.0679.XX08	801.0676.0408	MM08MOAB	M0890EB & M06SCTB
2501	801.0676.4709	801.0679.XX10	801.0676.0408	MM09MOAB	M0890EB & M06SCTB
3001-3501	801.0676.4710	801.0679.XX10	801.0676.0410	MM10MOAB	M1090EB & M06SCTB
4001	801.0676.4712	801.0679.XX12	801.0676.0412	MM12MOAB	M1290EB & M06SCTB
5001	801.0676.4712	801.0679.XX12	801.0676.0412	MM14MOAB	M1490EB & M06SCTB

Table 2B *Direct Vent Minimum / Maximum Allowable Air / Vent Lengths*

Model	AIR INLET			VENT			Input De-Rate per 25 feet of Vent
	Air Intake Diameter	Air Intake Min. Length	Air Intake Max. Length	Vent Diameter	Vent Min. Length	Vent Max. Length	
0751-1001	6"	12'	100'	6"	18'	100'	0%
1251*	6"	12'	75'	6"	18'	75'	1%
1251	6"	12'	100'	8"	18'	100'	0%
1501*	8"	12'	75'	6"	18'	75'	1%
1501	8"	12'	100'	8"	18'	100'	0%
1751-2001	8"	12'	100'	8"	18'	100'	0%
2501	8"	12'	100'	9"	18'	100'	0%
2501*	8"	12'	100'	10"	18'	100'	0%
3001	10"	12'	100'	10"	18'	100'	0%
3501	10"	12'	100'	10"	18'	100'	0%
4001	12"	12'	100'	12"	18'	100'	0%
5001/6001	14"	12'	100'	14"	18'	100'	0%

*FB 1251 - 1501 models using 6" vent require the installation of a field supplied reducing adapter (see Table 2A-2 on page 17).
*FB 1251 - 1501 LP models using 6" diameter vent will de-rate 2.5% per 25 feet of vent.
*FB 2501 models using 10" vent diameter option must use appropriate increase adapters as needed.

Table 2C *Room Air Minimum / Maximum Allowable Air / Vent Lengths*

Model	Vent Diameter	Vent Min. Length	Vent Max. Length	Input De-Rate per 25 feet of Vent
0751-1001	6"	18'	100'	0%
1251-1501*	6"	18'	100'	0%
1251-1501	8"	18'	100'	0%
1751-2001	8"	18'	100'	0%
2501	9"	18'	150'	0%
2501*	10"	18'	150'	0%
3001	10"	18'	150'	0%
3501	10"	18'	150'	0%
4001	12"	18'	150'	0%
5001/6001	14"	18'	150'	0%

*FB 1251 - 1501 models using 6" vent require the installation of a field supplied reducing adapter (see Table 2A-2 on page 17).
*FB 1251 - 1501 LP models using 6" diameter vent will de-rate 2.5% per 25 feet of vent.
*FB 2501 models using 10" vent diameter option must use appropriate increase adapters as needed.

2 General venting *(continued)*

When determining equivalent combustion air and vent length, add 5 feet (1.5m) for each 90° elbow and 3 feet (.9 m) for each 45° elbow.

EXAMPLE: 20 feet (6 m) of pipe + (4) 90° elbows + (3) 45° elbows = 49 equivalent feet (15 m) of piping.

Removing from existing vent

Follow the instructions in Section 1, page 10 of this manual when removing a boiler from an existing vent system.

Vent and air piping

Vent and air system:

NOTICE Installation must comply with local requirements and with the National Fuel Gas Code, NFPA 54 / ANSI Z223.1 for U.S. installations or CSA B149.1 for Canadian installations.

You must also install air piping from outside to the boiler air intake adapter. The resultant installation is direct vent (sealed combustion).

You may use any of the vent/air piping methods covered in this manual. Do not attempt to install the Crest using any other means.

⚠ WARNING DO NOT mix components from different systems. The vent system could fail, causing leakage of flue products into the living space. Use only approved stainless steel pipe and fittings.

NOTICE When installing outdoor models OF(N,L), reference the Outdoor Crest Supplemental Manual for further information.

Vent, air piping and termination:

The Crest vent and air piping can be installed through the roof or through a sidewall. Follow the procedures in this manual for the method chosen. Refer to the information in this manual to determine acceptable vent and air piping length.

Air contamination

Pool and laundry products and common household and hobby products often contain fluorine or chlorine compounds. When these chemicals pass through the boiler, they can form strong acids. The acid can eat through the boiler wall, causing serious damage and presenting a possible threat of flue gas spillage or boiler water leakage into the building.

Please read the information given in Table 1A, page 9, listing contaminants and areas likely to contain them. If contaminating chemicals will be present near the location of the boiler combustion air inlet, have your installer pipe the boiler combustion air and vent to another location, per this manual.

⚠ WARNING If the boiler combustion air inlet is located in a laundry room or pool facility, for example, these areas will always contain hazardous contaminants.

⚠ WARNING To prevent the potential of severe personal injury or death, check for areas and products listed in Table 1A, page 9 before installing the boiler or air inlet piping.

If contaminants are found, you MUST:

- Remove products permanently.

—OR—

- Relocate air inlet and vent terminations to other areas.

2 General venting

Common venting

Crest boilers may be common vented; however, the following criteria MUST BE followed:

1. Only Crest boilers may be connected to common flue applications. DO NOT mix other manufacturer's appliances or other Lochinvar models. Common air intake is not allowed.

2. Crest boilers connected to the common vent must all be of the same size.

3. Each Crest boiler must have a Lochinvar supplied flue damper installed (see Table 2D).

4. A condensate drain must be installed above the flue damper.

5. Only vertical direct vent, positive pressure, Category IV or vertical/chimney vent, negative pressure, Category II may be used when common venting Crest boilers. Sidewall venting is not allowed.

6. Crest boilers in a common vent must be connected and controlled with the integral Crest SMART TOUCH Cascade.
   a. The Leader may be controlled through the Crest SMART TOUCH control through BMS (external 0 - 10V signal), ModBus or its own internally calculated set point.
   b. The Cascade (Members) must be controlled by the Crest Leader boiler using the Lead/Lag Cascade option.

For approved common vent sizing, contact the factory.

⚠WARNING When Crest boilers are common vented, the criteria above MUST BE followed. Failure to follow all these requirements will result in severe personal injury, death, or substantial property damage.

NOTICE When Crest boilers are common vented, hot water generators MUST BE piped to the primary heating loop and tank thermostats must not be connected to the Crest.

NOTICE A field supplied inline condensate collection section MUST BE installed directly above the backflow preventer.

NOTICE When using polypropylene common vent on Models 751 - 3501, a field supplied polypropylene to stainless steel adapter MUST BE installed between the backflow preventer and the unit connection.

***Table 2D** Flue Damper Kits*

Flue Damper Kits		
Model	**Damper Size**	**Kit Number**
FB0751	6"	100352523
FB1001	6"	100352523
FB1251	8"	100141561
FB1501	8"	100141561
FB1751	8"	100141561
FB2001	8"	100141561
FB2501	9"	100141562
FB3001	10"	100141563
FB3501	10"	100141563
FB4001	12"	100141564
FB5001/6001	14"	100141565

PVC/CPVC (Models 751 - 4001 only)

This product has been approved for use with the PVC/CPVC vent materials listed in Table 2E on page 21.

NOTICE Factory installed vent connections are sized for stainless steel venting.

Installing vent and air piping

⚠WARNING The vent connection to the appliance must be made with a minimum of 10 equivalent feet of CPVC pipe (field provided). The field provided vent fittings must be cemented to the CPVC pipe section using an "All Purpose Cement" suitable for PVC and CPVC pipe. Use only the vent materials, primer, and cement specified in Table 2E to make the vent connections. Failure to follow this warning could result in fire, personal injury, or death.

NOTICE Use only cleaners, primers, and solvents that are approved for the materials which are joined together.

NOTICE All PVC vent pipes must be glued, properly supported, and the exhaust must be pitched a minimum of a 1/4 inch per foot back to the boiler (to allow drainage of condensate).

⚠WARNING Insulation should not be used on PVC or CPVC venting materials. The use of insulation will cause increased vent wall temperatures, which could result in vent pipe failure.

NOTICE CPVC vent or stainless steel pipe and vent fittings must be used in closet and alcove installations.

2 General venting *(continued)*

***Table 2E** PVC/CPVC Vent Pipe and Fittings*

Approved PVC/CPVC Vent Pipe and Fittings		
Item	**Material**	**Standard**
Vent pipe	PVC Schedule 40, 80	ANSI/ASTM D1785
	PVC - DWV	ANSI/ASTM D2665
	CPVC Schedule 40, 80	ANSI/ASTM F441
Vent fittings	PVC Schedule 40	ANSI/ASTM D2466
	PVC Schedule 80	ANSI/ASTM D2467
	CPVC Schedule 80	ANSI/ASTM F439
	PVC - DWV	ANSI/ASTM D2665
Pipe Cement / Primer	PVC	ANSI/ASTM D2564
	CPVC	ANSI/ASTM F493
NOTICE: DO NOT USE CELLULAR (FOAM) CORE PIPE		

NOTE: In Canada, CPVC and PVC vent pipe, fittings and cement/primer must be ULC-S636 certified.

1. Work from the boiler to vent or air termination. Do not exceed the lengths given in this manual for the air or vent piping.
2. Cut pipe to the required lengths and deburr the inside and outside of the pipe ends.
3. Chamfer outside of each pipe end to ensure even cement distribution when joining.
4. Clean all pipe ends and fittings using a clean dry rag. (Moisture will retard curing and dirt or grease will prevent adhesion.)

***Figure 2-2** Near Boiler PVC/CPVC Venting (Flue connections from the factory are sized for stainless steel venting.)*

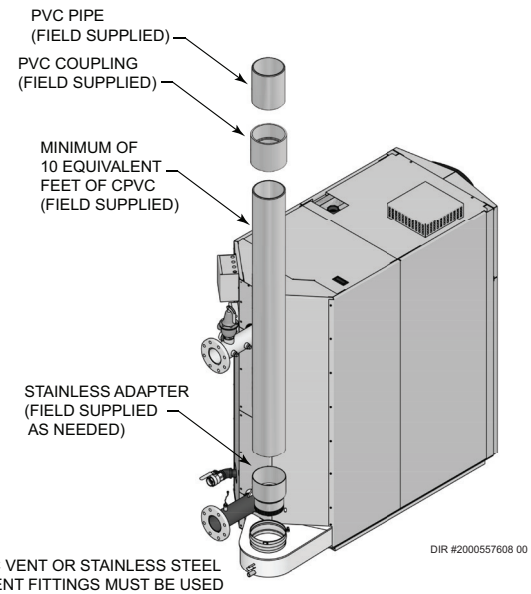

NOTE: CPVC VENT OR STAINLESS STEEL PIPE AND VENT FITTINGS MUST BE USED IN CLOSET AND ALCOVE INSTALLATIONS.

5. Dry fit vent or air piping to ensure proper fit up before assembling any joint. The pipe should go a third to two-thirds into the fitting to ensure proper sealing after cement is applied.
6. Priming and Cementing:
   a. Handle fittings and pipes carefully to prevent contamination of surfaces.
   b. Apply a liberal even coat of primer to the fitting socket and to the pipe end to approximately 1/2" beyond the socket depth.
   c. Apply a second primer coat to the fitting socket.
   d. While primer is still wet, apply an even coat of approved cement to the pipe equal to the depth of the fitting socket along with an even coat of approved cement to the fitting socket.
   e. Apply a second coat of cement to the pipe.
   f. While the cement is still wet, insert the pipe into the fitting, if possible twist the pipe a 1/4 turn as you insert it. **NOTE:** If voids are present, sufficient cement was not applied and joint could be defective.
   g. Wipe excess cement from the joint removing ring or beads as it will needlessly soften the pipe.

***Table 2F** PVC Adapter Kits*

PVC Adapter Kits		
Model	**Vent Size**	**Kit Number**
751-1001	6"	100289537
1251	6"	100289537
1251	8"	100267012
1501	6"	100289537
1501	8"	100267012
1751-2001	8"	100267012
2501*	10"	100316610
3001	10"	100314852
3501	10"	100314852
4001	12"	Field Supplied
*Adapts 9" SS to 10" CPVC/PVC **NOTICE: A MINIMUM OF 10 EQUIVALENT FEET OF CPVC (FIELD SUPPLIED) MUST BE INSTALLED DIRECTLY AFTER ADAPTER IN ALL APPLICATIONS**		

2 General venting

Polypropylene (Models 751 - 4001 only)

This product has been approved for use with polypropylene vent with the manufacturers listed in Table 2G.

NOTICE Factory installed vent connections are sized for stainless steel venting.

All terminations must comply with listed options in this manual and be a single-wall vent offering.

For support and special connections required, see the manufacturer's instructions. All vent is to conform to standard diameter and equivalent length requirements established.

When determining equivalent combustion air and vent length for polypropylene single-wall piping contact the manufacturer.

***Table 2G** Polypropylene Vent Pipe and Fittings*

Approved Polypropylene Vent Manufacturers	
Make	**Model**
Centrotherm Eco Systems	InnoFlue SW/Flex
Duravent (M & G Group)	PolyPro Single-Wall / PolyPro Flex

NOTICE The installer must use a specific vent starter adapter at the flue collar connection. The adapter is supplied by the vent manufacturer to adapt to its vent system. See Table 2G for approved vent adapters.

NOTICE All vent connections MUST be secured by the vent manufacturer's joint connector (FIG. 2-3).

⚠WARNING Insulation should not be used on polypropylene venting materials. The use of insulation will cause increased vent wall temperatures, which could result in vent pipe failure.

⚠WARNING Use only the adapters and vent system listed in Tables 2G and 2H. DO NOT mix vent systems of different types or manufacturers. Failure to comply could result in severe personal injury, death, or substantial property damage.

NOTICE Installations must comply with applicable national, state, and local codes. For Canadian installation, polypropylene vent must be listed as a ULC-S636 approved system.

NOTICE Installation of a polypropylene vent system should adhere to the vent manufacturer's installation instructions supplied with the vent system.

***Figure 2-3** Near Boiler Polypropylene Venting*

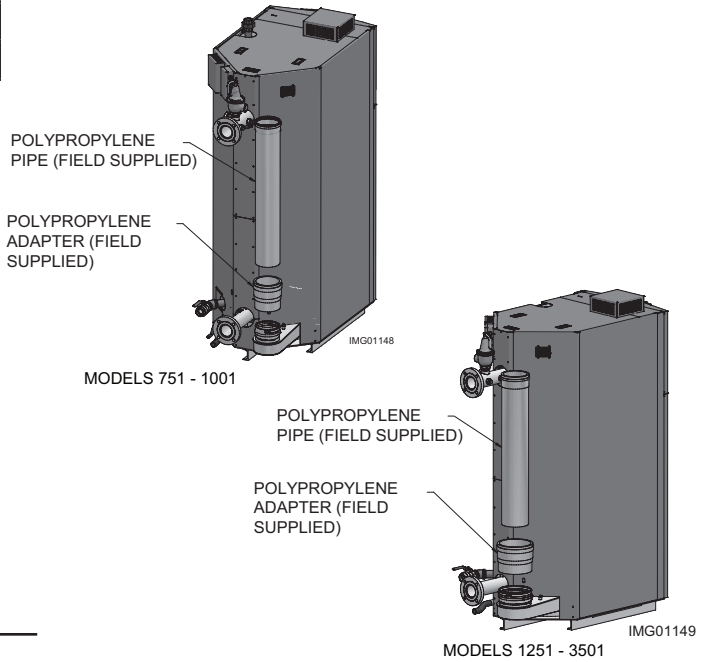

***Table 2H** Approved Polypropylene Terminations*

Model	Manufacturer	Vent Model	Vent Type	Adapter Number	Joint Connector	Sidewall Kit*	Retaining Bracket / Adapter*
751-1001	Centrotherm Eco Systems	Innoflue	Single-Wall Flex	ISSALE0606	--	--	IATP0606 / ISTAGL0606
	DuraVent (M & G)	PolyPro	Single-Wall Flex	FSA-06M-6PPF	--	6PPS-HLKL	--
1251-2001	Centrotherm Eco Systems	Innoflue	Single-Wall	ISSA0808	--	--	--
	DuraVent (M & G)	PolyPro	Single-Wall	FSA-08M-8PPF	--	8PPS-HSTL	--
2501	Centrotherm	Innoflue	Single-Wall	ISSA0910	--	--	--
3001-3501	Centrotherm Eco Systems	Innoflue	Single-Wall	ISSA1010	--	--	--
4001	Centrotherm	Innoflue	Single-Wall	ISSA1212	N/A	N/A	N/A
5001-6001	N/A	N/A	N/A	N/A	N/A	N/A	N/A

* These parts are only needed if the sidewall termination assembly is used (see FIG. 4-1C on page 26).

3 Vertical direct venting

Vent/air termination – vertical

⚠WARNING Follow instructions below when determining vent location to avoid possibility of severe personal injury, death or substantial property damage.

⚠WARNING Do not connect any other appliance to the vent pipe or multiple boilers to a common vent pipe except as noted in Section 2 on page 20. Failure to comply could result in severe personal injury, death, or substantial property damage.

NOTICE Installation must comply with local requirements and with the National Fuel Gas Code, NFPA 54 / ANSI Z223.1 - latest edition for U.S. installations or CSA B149.1 Installation Code for Canadian installations.

Determine location

Locate the vent/air terminations using the following guidelines:

1. The total length of piping for vent or air must not exceed the limits given in the General Venting Section on page 18 of this manual.
2. The vent must terminate at least 3 feet above the highest place in which the vent penetrates the roof and at least 2 feet above any part of a building within 10 horizontal feet.
3. The air piping must terminate in a down-turned 180° return pipe no further than 2 feet (.6 m) from the center of the vent pipe. This placement avoids recirculation of flue products into the combustion air stream.
4. The vent piping must terminate in an up-turned coupling as shown in FIG. 3-1. The top of the coupling or the rain cap must be at least 36" (914 mm) above the air intake. The air inlet pipe and vent pipe can be located in any desired position on the roof, but must always be no further than 2 feet (.6 m) apart and with the vent termination at least 36" (914 mm) above the air intake.

⚠WARNING Rooftop vent and air inlet terminations must terminate in the same pressure zone, unless vertical vent sidewall air is set up as shown in the General Venting - Vertical Vent, Sidewall Air Section.

***Figure 3-1** Vertical Termination of Air and Vent*

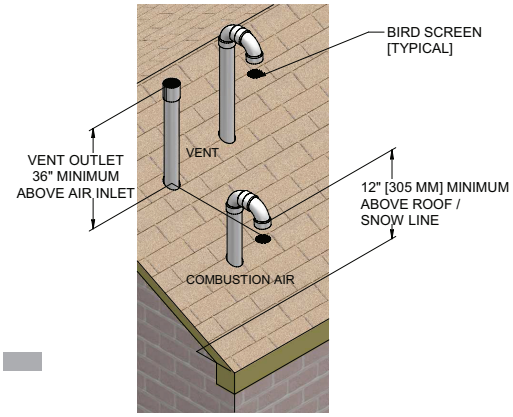

***Figure 3-2** Vertical Termination of Air and Vent w/Rain Cap*

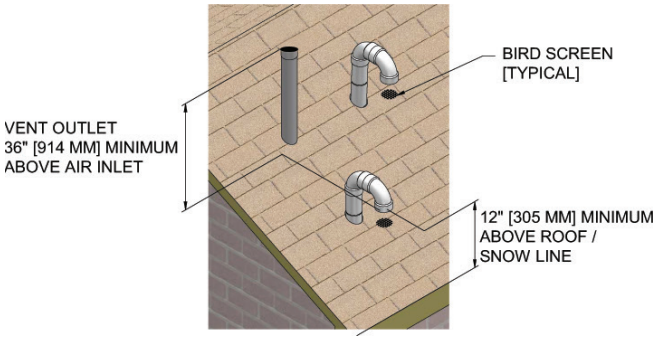

5. Locate terminations so they are not likely to be damaged by foreign objects, such as stones or balls, or subject to buildup of leaves or sediment.

Prepare roof penetrations

1. Air pipe penetration:
   a. Cut a hole for the air pipe. Size the air pipe hole as close as desired to the air pipe outside diameter.
2. Vent pipe penetration:
   a. Cut a hole for the vent pipe. For either combustible or noncombustible construction, size the vent pipe hole per the vent manufacturer's instructions.
   b. Insert a galvanized metal thimble in the vent pipe hole (when required by local codes).
3. Space the air and vent holes to provide the minimum spacing shown in FIG. 3-1.
4. Follow all local codes for isolation of vent pipe when passing through floors, ceilings, and roofs.
5. Provide flashing and sealing boots sized for the vent pipe and air pipe.

Termination and fittings

1. Prepare the vent termination coupling and the air termination elbow (FIG. 3-1) by inserting bird screens. Bird screens should be obtained locally.
2. The air piping must terminate in a down-turned 180° return bend as shown in FIG. 3-1. Locate the air inlet pipe no further than 2 feet (.6 m) from the center of the vent pipe. This placement avoids recirculation of flue products into the combustion air stream.

3 Vertical direct venting

3. The vent piping must terminate in an up-turned coupling as shown in FIG. 3-1. The top of the coupling or the rain cap must be at least 36" (914 mm) above the air intake. The air inlet pipe and vent pipe can be located in any desired position on the roof, but must always be no further than 2 feet (.6 m) apart and with the vent termination at least 36" (914 mm) above the air intake.
4. Maintain the required dimensions of the finished termination piping as shown in FIG. 3-1.
5. Do not extend exposed vent pipe outside of building more than shown in this document. Condensate could freeze and block vent pipe.

Multiple vent/air terminations

1. When terminating multiple Crest boilers, terminate each vent/air connection as described in this manual (FIG. 3-3).

⚠WARNING Terminate all vent pipes at the same height and all air pipes at the same height to avoid recirculation of flue products and the possibility of severe personal injury, death, or substantial property damage.

2. Place roof penetrations to obtain minimum clearance of 36 inches (914 mm) between edge of air intake elbow and adjacent vent pipe of another boiler for U.S. installations (see FIG. 3-3). For Canadian installations, provide clearances required by CSA B149.1 Installation Code.
3. The air inlet of a Crest boiler is part of a direct vent connection. It is not classified as a forced air intake with regard to spacing from adjacent boiler vents.

Figure 3-4 *Alternate Vertical Terminations with Multiple Boilers*

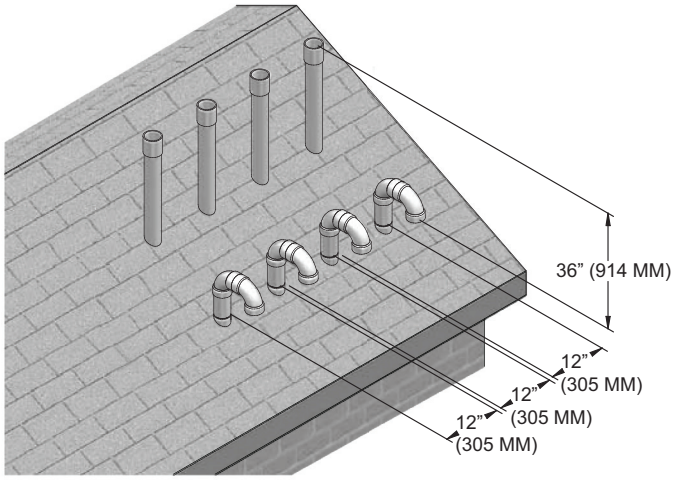

DIR# 2000539526

Figure 3-3 *Vertical Terminations with Multiple Boilers*

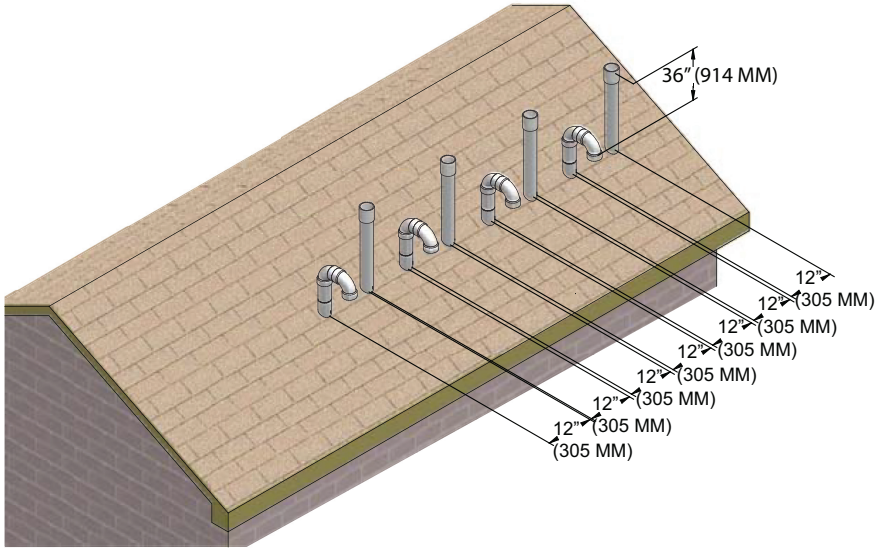

DIR# 2000539525

4 Sidewall direct venting

Vent/air termination – sidewall

⚠WARNING Follow instructions below when determining vent location to avoid possibility of severe personal injury, death, or substantial property damage.

⚠WARNING A gas vent extending through an exterior wall shall not terminate adjacent to a wall or below building extensions such as eaves, parapets, balconies, or decks. Failure to comply could result in severe personal injury, death, or substantial property damage.

⚠WARNING Do not connect any other appliance to the vent pipe or multiple boilers to a common vent pipe except as noted in Section 2 on page 20. Failure to comply could result in severe personal injury, death, or substantial property damage.

⚠ CAUTION Sidewall venting commercial products will result in large exhaust plumes in cold climates. Consideration should be taken when locating in proximity to windows, doors, walkways, etc.

NOTICE Installation must comply with local requirements and with the National Fuel Gas Code, NFPA 54 / ANSI Z223.1 for U.S. installations or CSA B149.1 for Canadian installations.

Determine location

Locate the vent/air terminations using the following guidelines:

1. The total length of piping for vent or air must not exceed the limits given in the General Venting Section on page 18 of this manual.

2. You must consider the surroundings when terminating the vent and air:
   a. Position the vent termination where vapors will not damage nearby shrubs, plants or air conditioning equipment or be objectionable.
   b. The flue products will form a noticeable plume as they condense in cold air. Avoid areas where the plume could obstruct window views.
   c. Prevailing winds could cause freezing of condensate and water/ice buildup where flue products impinge on building surfaces or plants.
   d. Avoid possibility of accidental contact of flue products with people or pets.
   e. Do not locate the terminations where wind eddies could affect performance or cause recirculation, such as inside building corners, near adjacent buildings or surfaces, window wells, stairwells, alcoves, courtyards, or other recessed areas.

⚠WARNING Sidewall vent and air inlet terminations must terminate in the same pressure zone.

   f. Do not terminate above any door or above or below any window. Condensate can freeze, causing ice formations.
   g. Locate or guard vent to prevent condensate damage to exterior finishes.
   h. Position the vent/air terminations on the same wall where wind blowing from any direction will not create a difference in pressure between the terminations.

***Figure 4-1A** Sidewall Termination of Air and Vent*

NOTICE PVC/CPVC or ABS is acceptable air inlet pipe material.

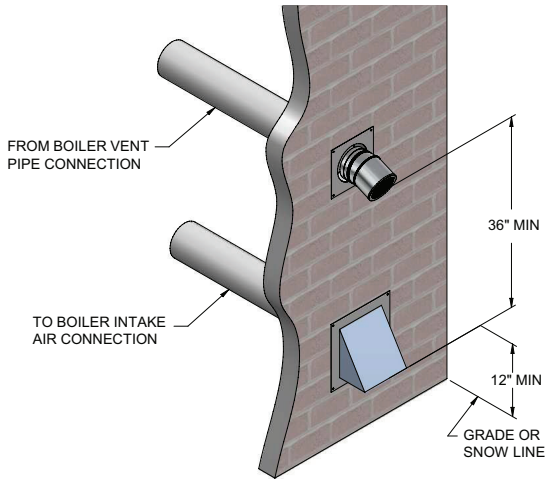

3. Maintain clearances as shown in FIG.'s 4-1A thru 4-4, pages 25 thru 27. The vent termination should not be located in traffic areas such as walkways, adjacent buildings, operable windows, or doors. Also maintain the following:
   a. Vent must terminate:
      - At least 6 feet (1.8 m) from adjacent walls.
      - Not less than 7 feet (2.1 m) above grade where located adjacent to public walkways.
      - No closer than 12 inches (305 mm) below roof overhang.
      - At least 3 feet (.9 m) above any forced air intake within 10 feet (3 m).
      - No closer than 4 feet (1.2 m) horizontally from any door or window or any other gravity air inlet.
   b. Air inlet must terminate at least 12 inches (305 m) above grade or snow line; at least 36 inches (914 mm) below the vent termination.
   c. Do not terminate closer than 4 feet (1.2 m) horizontally from any electric meter, gas meter, regulator, relief valve, or other equipment. Never terminate above or below any of these within 4 feet (1.2 m) horizontally.

4. Locate terminations so they are not likely to be damaged by foreign objects, such as stones or balls, or subject to buildup of leaves or sediment.

4 Sidewall direct venting

Vent/air termination – sidewall

Figure 4-1B *PVC/CPVC/ Polypropylene Sidewall Termination of Air and Vent w/Field Supplied Fittings (Models 751 - 3501 only)*

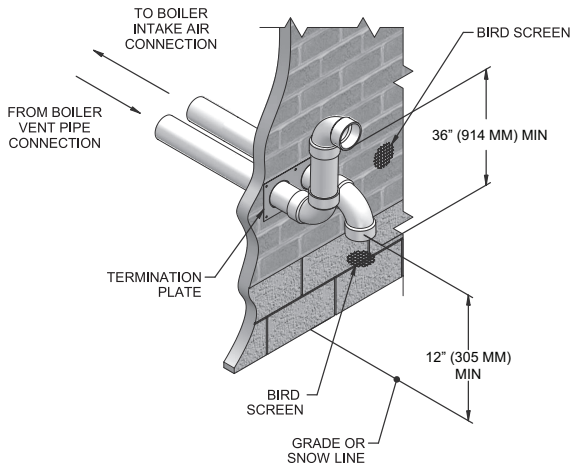

3. The air piping must terminate in a down-turned elbow as shown in FIG. 4-1B. This arrangement avoids recirculation of flue products into the combustion air stream.
4. The vent piping must terminate in an elbow pointed outward or away from the air inlet, as shown in FIG. 4-1B.

⚠WARNING Do not exceed the maximum lengths of the outside vent piping shown in FIG. 4-1C. Excessive length exposed to the outside could cause freezing of condensate in the vent pipe, resulting in potential boiler shutdown.

Figure 4-1C *PVC/CPVC/Polypropylene Sidewall Termination of Air and Vent (Models 751 - 1001 only)*

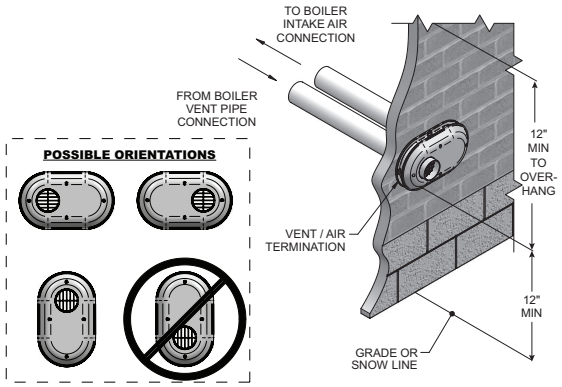

Table 4A *Sidewall Vent Kits*

Model	Kit #	Air	Vent	Centerline Width
751 - 1001	100157612	6" (152 mm)	6" (152 mm)	7 3/4" (197 mm)

Figure 4-2A *PVC/CPVC/ Polypropylene Sidewall Termination w/Field Supplied Fittings (Models 751 - 3501 only)*

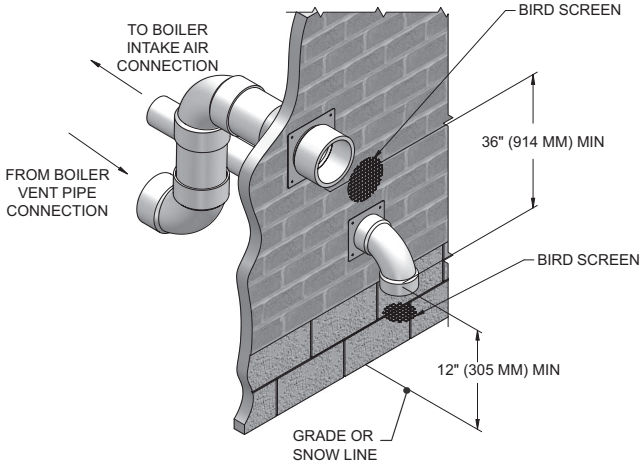

Figure 4-2B *Stainless Steel Sidewall Termination w/Field Supplied Fittings (Models 751 - 6001 only)*

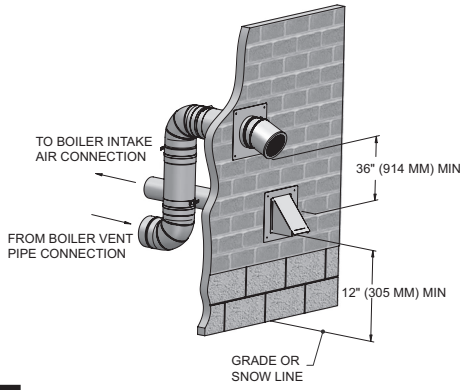

NOTICE PVC/CPVC or ABS is acceptable air inlet pipe material.

5. Maintain clearances as shown in FIG.'s 4-1A thru 4-4, pages 25 thru 27. Also maintain the following:
   a. Vent must terminate:
      - At least 6 feet (1.8 m) from adjacent walls.
      - No closer than 12 inches (305 mm) below roof overhang.
      - At least 7 feet (2.1 m) above any public walkway.
      - At least 3 feet (.9 m) above any forced air intake within 10 feet (3 m).
      - No closer than 4 feet (1.2 m) below or horizontally from any door or window or any other gravity air inlet.
   b. Air inlet must terminate at least 12 inches (305 mm) above grade or snow line; at least 3 feet (.9 m) below the vent termination (FIG. 4-1B); and the vent pipe must not extend more than 24 inches (610 mm) vertically outside the building.
   c. Do not terminate closer than 4 feet (1.2 m) horizontally from any electric meter, gas meter, regulator, relief valve, or other equipment. Never terminate above or below any of these within 4 feet (1.2 m) horizontally.
6. Locate terminations so they are not likely to be damaged by foreign objects, such as stones or balls, or subject to buildup of leaves or sediment.

4 Sidewall direct venting *(continued)*

Vent/air termination – sidewall

Figure 4-3 *Clearance to Doors and Windows*

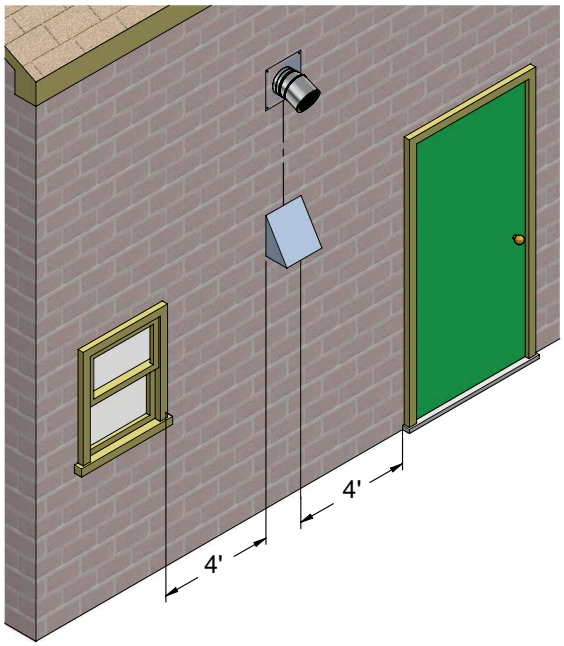

Figure 4-4 *Clearance to Forced Air Inlets*

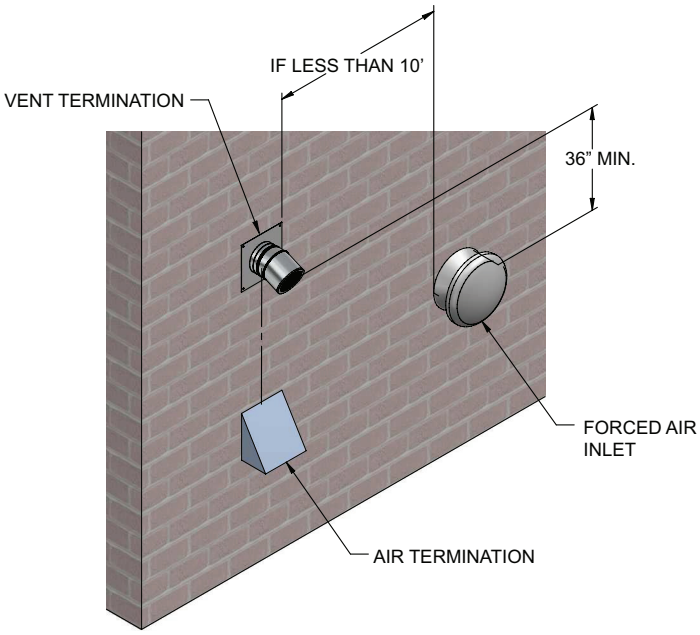

⚠ CAUTION Sidewall venting commercial products will result in large exhaust plumes in cold climates. Consideration should be taken when locating in proximity to windows, doors, walkways, etc.

Prepare wall penetrations

1. Air pipe penetration:
   a. Cut a hole for the air pipe. Size the air pipe hole as close as desired to the air pipe outside diameter.

   Vent pipe penetration:
   a. Cut a hole for the vent pipe. For either combustible or noncombustible construction, size the vent pipe hole per the vent manufacturer's instructions.

2. Install the vent and air intake piping. Seal all gaps between the pipes and wall with RTV silicone sealant.
3. Seal all wall cavities.

Termination and fittings

1. The air termination must be oriented at least 12 inches above grade or snow line as shown in FIG. 4-1A, page 25.
2. Maintain the required dimensions of the finished termination piping as shown in FIG. 4-1A, page 25.
3. Do not extend exposed vent pipe outside of the building more than what is shown in this document. Condensate could freeze and block vent pipe.
4. Stainless steel terminations are designed to penetrate walls with a thickness up to 9.25 inches of standard construction.

Multiple vent/air terminations

1. When terminating multiple Crest boilers terminate each vent/air connection as described in this manual (FIG. 4-5).

⚠ WARNING All vent pipes and air inlets must terminate at the same height to avoid possibility of severe personal injury, death, or substantial property damage.

4 Sidewall direct venting

2. Place wall penetrations to obtain minimum clearance of 36 inches (914 mm) between vent pipe and adjacent air inlet, as shown in FIG. 4-5 for U.S. installations. For Canadian installations, provide clearances required by CSA B149.1 Installation Code.

3. The air inlet of a Crest is part of a direct vent connection. It is not classified as a forced air intake with regard to spacing from adjacent boiler vents.

Figure 4-5 *Multiple Vent Terminations (must also comply with* ***Figure 4-1A****)*

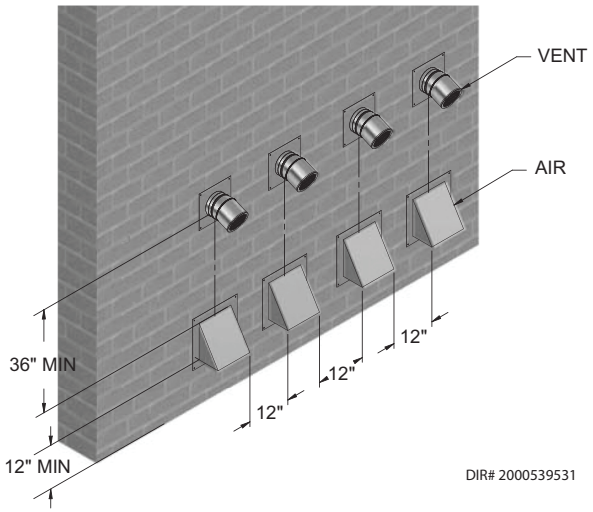

Figure 4-6 *Direct Vent Terminations*

DIRECT VENT TERMINATIONS			
Air Inlet		Vent Termination	
Dryer Inlet	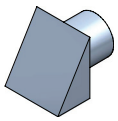	Straight	
90° Elbow		Mitered	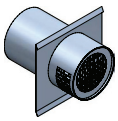
		23° Elbow	

Figure 4-7 *Room Air (Direct Exhaust Terminations)*

ROOM AIR (DIRECT EXHAUST TERMINATIONS)	
Vent Termination	
23° Elbow	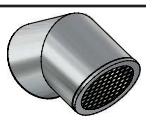
45° Elbow	

Room air

The Crest boiler may be installed with a single pipe carrying the flue products to the outside while using combustion air from the equipment room.

Follow the requirements in the General Venting, Sidewall Direct Venting, and Vertical Direct Venting sections for vent material specifications, vent length requirements, and vent termination requirements.

Install the air inlet cover (shipped loose with the boiler) per FIG. 4-8. Combustion and ventilation air must be supplied to the equipment room per the requirements on pages 12 and 13 of this manual for proper operation of the Crest boiler when utilizing the single pipe method.

Figure 4-8 *Room Air Installation*

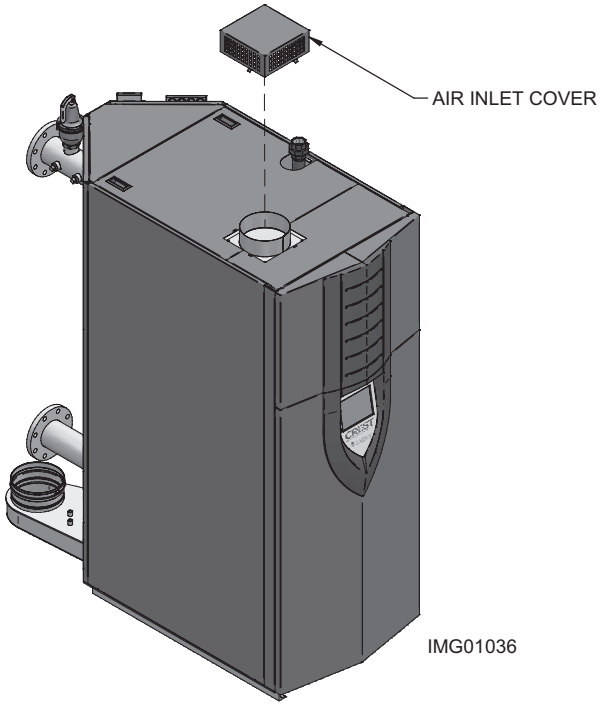

5 Hydronic piping

System water piping methods

The Crest is designed to function in a closed loop pressurized system not less than 12 psi (83 kPa) (Non-metallic system piping must have an oxygen barrier to be considered a closed loop). A temperature and pressure gauge is included to monitor system pressure and outlet temperature and should be located on the boiler outlet.

It is important to note that the boiler has a pressure drop which must be figured in when sizing the circulators. Each boiler installation must have an air elimination device, which will remove air from the system.

Install the boiler so the gas ignition system components are protected from water (dripping, spraying, etc.) during appliance operation or basic service of circulator replacement, valves, and others.

Observe a minimum of 1/4 inch (6 mm) clearance around all un-insulated hot water pipes when openings around the pipes are not protected by non-combustible materials.

Low water cutoff device

An electronic low water cutoff is provided as standard equipment on all models. The low water cutoff should be inspected every 6 months.

Chilled water system

If the boiler supplies hot water to heating coils in air handler units, flow control valves or other devices must be installed to prevent gravity circulation of heater water in the coils during the cooling cycle. A chilled water medium must be piped in parallel with the heater.

Freeze protection

Freeze protection for new or existing systems must use glycol that is specially formulated for this purpose. This includes inhibitors, which prevent the glycol from attacking the metallic system components. Make certain to check that the system fluid is correct for the glycol concentration and inhibitor level. The system should be tested at least once a year and as recommended by the producer of the glycol solution. Allowance should be made for the expansion of the glycol solution in the system piping.

⚠WARNING Lochinvar recommends inhibited propylene glycol solutions, which are specifically formulated for hydronic systems. Never use automotive antifreeze.

General piping information

IMPORTANT All boiler piping must contain an oxygen barrier. This will help prevent any excess oxygen from entering the system.

Basic steps are listed below along with illustrations on the following pages, which will guide you through the installation of the Crest (FIG's 5-2 thru 5-5).

1. Connect the system return to the flanged connection marked "Inlet", make sure to install with a suitable gasket between flanges.
2. Connect the system supply to the flanged connection marked "Outlet", make sure to install with a suitable gasket between flanges.
3. Install purge and balance valve or shutoff valve and drain on system return to purge air out of each zone.
4. Install a backflow preventer on the cold feed makeup water line.
5. Install a pressure reducing valve on the cold feed makeup water line, (15 psi (103 kPa) nominal). Check temperature and pressure gauge, which should read a minimum pressure of 12 psi (83 kPa).
6. Install the circulators as shown on the piping diagrams in this section. Make sure the circulators are properly sized for the system and friction loss. Install check valves with each boiler circulator.
7. Install an expansion tank on the system supply. Consult the tank manufacturer's instruction for specific information relating to tank installation. Size the expansion tank for the required system volume and capacity.
8. Install an air elimination device on the system supply.
9. This appliance is supplied with a relief valve sized in accordance with ASME Boiler and Pressure Vessel Code, Section IV ("Heating Boilers"). The safety relief valve is installed at the factory and is located on the rear of the boiler. Pipe the discharge of the safety relief valve to prevent injury in the event of pressure relief. Pipe the discharge to a drain. Provide piping that is the same size as the safety relief valve outlet. Never block the outlet of the safety relief valve.
10. Install a field supplied strainer to prevent damage to the heat exchanger caused by debris entering from the system piping. When installing in a pre-existing system, a strainer/filter capable of removing debris left in the system is recommended.
11. Install a field supplied magnetic separator in the heating system return line as close as practical to the boiler per the manufacturer's instructions.

NOTICE A magnetic separator is recommended when a unit is installed in a pre-existing system, or a system containing steel and/or cast iron pipe

5 Hydronic piping

Circulator sizing

The Crest heat exchanger does have a pressure drop, which must be considered in your system design. Refer to the graphs in FIG.'s 5-1A and 5-1B for pressure drop through the Crest heat exchanger.

Figure 5-1A *Pressure Drop vs. Flow (Models 751 - 2001)*

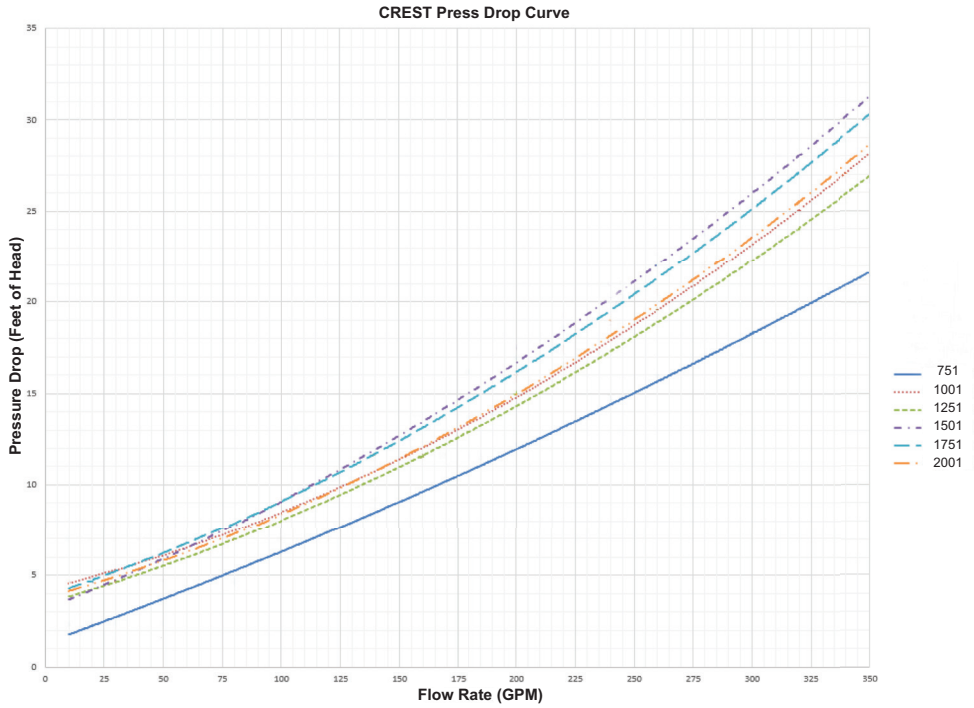

Figure 5-1B *Pressure Drop vs. Flow (Models 2501 - 6001)*

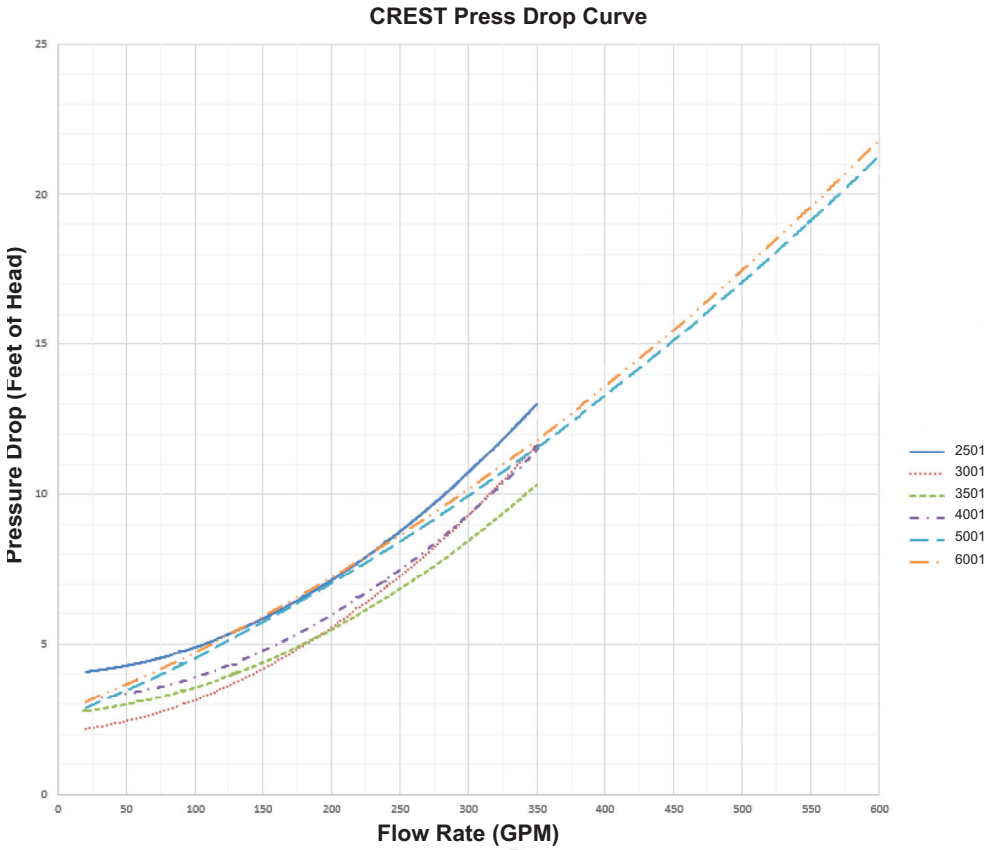

5 Hydronic piping *(continued)*

Table 5A *Sizing Information for Temperature Rise Applications_20°F, 40°F and 60°F*

TEMPERATURE RISE APPLICATIONS							
Model	BOILER CONNECTION SIZE	20°F		40°F		60°F	
		GPM	FT/HD	GPM	FT/HD	GPM	FT/HD
FB 0751	3"	72	4.8	36	3.0	24	2.5
FB 1001	3"	96	8.3	48	6.0	32	5.5
FB 1251	3"	120	9.2	60	6.0	40	4.1
FB 1501	4"	144	12.3	72	7.3	48	5.8
FB 1751	4"	168	13.8	84	8.1	56	6.7
FB 2001	4"	192	14.5	96	8.1	64	6.6
[FB 751 - 2001 models are based on 96% AHRI Efficiency]							
FB 2501	4"	240	8.4	120	5.3	80	4.8
FB 3001	4"	288	8.0	144	4.0	96	3.3
FB 3501	4"	336	9.9	168	5.0	112	3.8
FB 4001	4"	350*	10.9	192	5.9	128	4.4
FB 5001	6"	480	13.9	240	7.6	160	5.5
FB 6001	6"	576	17.2	288	9.4	192	6.8
[Models FB 2501 - 3501 and 6001 based on 96% AHRI Efficiency and Models FB 4001 - 5001 based on 96% Efficiency] *Flow is based on 22°F ΔT.							

NOTICE The pressure drop reflected in FIG. 5-1 is for the **boiler only**. Additional allowances must be made for piping, especially if sizing pumps for Primary/Secondary applications.

NOTICE It is required that boiler piping systems utilize ***Primary/Secondary or Fixed or Variable Flow Primary*** configurations as shown in FIG.'s 5-2 thru 5-5. The use of other boiler piping configurations could result in improper building and system flow rates leading to inadvertent boiler high limit shutdowns and poor system performance.

NOTICE For fixed or variable flow primary system configuration, install isolation valves to prevent flow through unfired boilers in accordance with ASHRAE 90.1 (6.5.4.3.2).

5 Hydronic piping

Near boiler piping components

1. **Boiler piping:**
   Boiler system piping should be sized per the pipe requirements listed in Tables 5A and 5C.
2. **Boiler circulating pump:**
   Field supplied. When using Primary/Secondary piping the boiler circulating pump should be sized per Table 5A.
3. **Hot Water Generator circulating pump:**
   Field supplied. When installed in a Primary/Secondary arrangement, the Crest requires an additional pump for the Hot Water Generator Loop. The pump should be sized per Table 5A. Consult the indirect water heater operating guide to determine flow characteristics for the selected product used. The pump's total flow and heat requirements are the sum of the boiler and the indirect water heater.
4. **Boiler isolation valves:**
   Field supplied. Full port valves are required. Failure to use full port valves could result in a restricted flow rate through the boiler.
5. **Check valves:**
   Field supplied. Check valves are required for installation as shown in FIG.'s 5-2 and 5-3. Failure to install check valves could result in a reverse flow condition during pump(s) off cycle.
6. **Domestic indirect hot water isolation valves:**
   Field supplied. Full port valves are required. Failure to use full port valves could result in a restricted flow rate through the boiler.
7. **Anti-scald mixing valve:**
   Field supplied. An anti-scald mixing valve is recommended when storing domestic hot water above 115°F (46°C).
8. **Pressure relief valve:**
   Factory supplied. The pressure relief valve is sized to ASME specifications.
9. **System temperature sensor:**
   Lochinvar supplies a system temperature sensor. The sensor is to be installed in the heating loop downstream from the boiler hot water piping and heating loop junction. The sensor should be located far enough downstream to sense system diluted water temperature.
10. **Water Meter:**
    Field supplied. A water meter to monitor makeup water is recommended. Makeup water volume should not exceed 5% of total system per year.

NOTICE A system supply sensor (factory supplied) MUST BE installed with Primary/Secondary systems for proper boiler operation.

11. **Y-Strainer:**
    Field supplied. Install a Y-strainer or equivalent multi-purpose strainer just before the boiler pump at the inlet of the heat exchanger. This item is used to remove system debris from older hydronic systems and to protect newer systems.
12. **Magnetic Separator:**
    Field Supplied. Install a magnetic Separator in the heating system return line as close as practical to the boilker per the manufacturer's instructions.

⚠ CAUTION The maximum allowable water flow rate through a single Crest boiler is 350 GPM for the 751 - 4001 models and up to 600 GPM for the 5001 - 6001 models. Exceeding this flow rate will result in damage to the heat exchanger and/or piping.

NOTICE Reference Table 5B for the absolute minimum flow rate through a single Crest boiler.

Table 5B *Absolute Minimum Flow Rate*

ABSOLUTE MINIMUM FLOW RATE	
MODEL	**FLOW RATE (GPM)**
FB(N,L)0751	18
FB(N,L)1001	18
FB(N,L)1251	18
FB(N,L)1501	25
FB(N,L)1751	25
FB(N,L)2001	25
FB(N,L)2501	25
FB(N,L)3001	25
FB(N,L)3501	45
FB(N,L)4001	45
FB(N,L)5001	50
FB(N,L)6001	60

See the piping illustrations included in this section, FIG.'s 5-2 thru 5-5 for suggested guidelines in piping the Crest.

NOTICE Please note that these illustrations are meant to show system piping concept only, the installer is responsible for all equipment and detailing required by local codes.

5 Hydronic piping *(continued)*

Figure 5-2 *Single Boiler - Recommended - Primary / Secondary Piping with a Hot Water Generator*

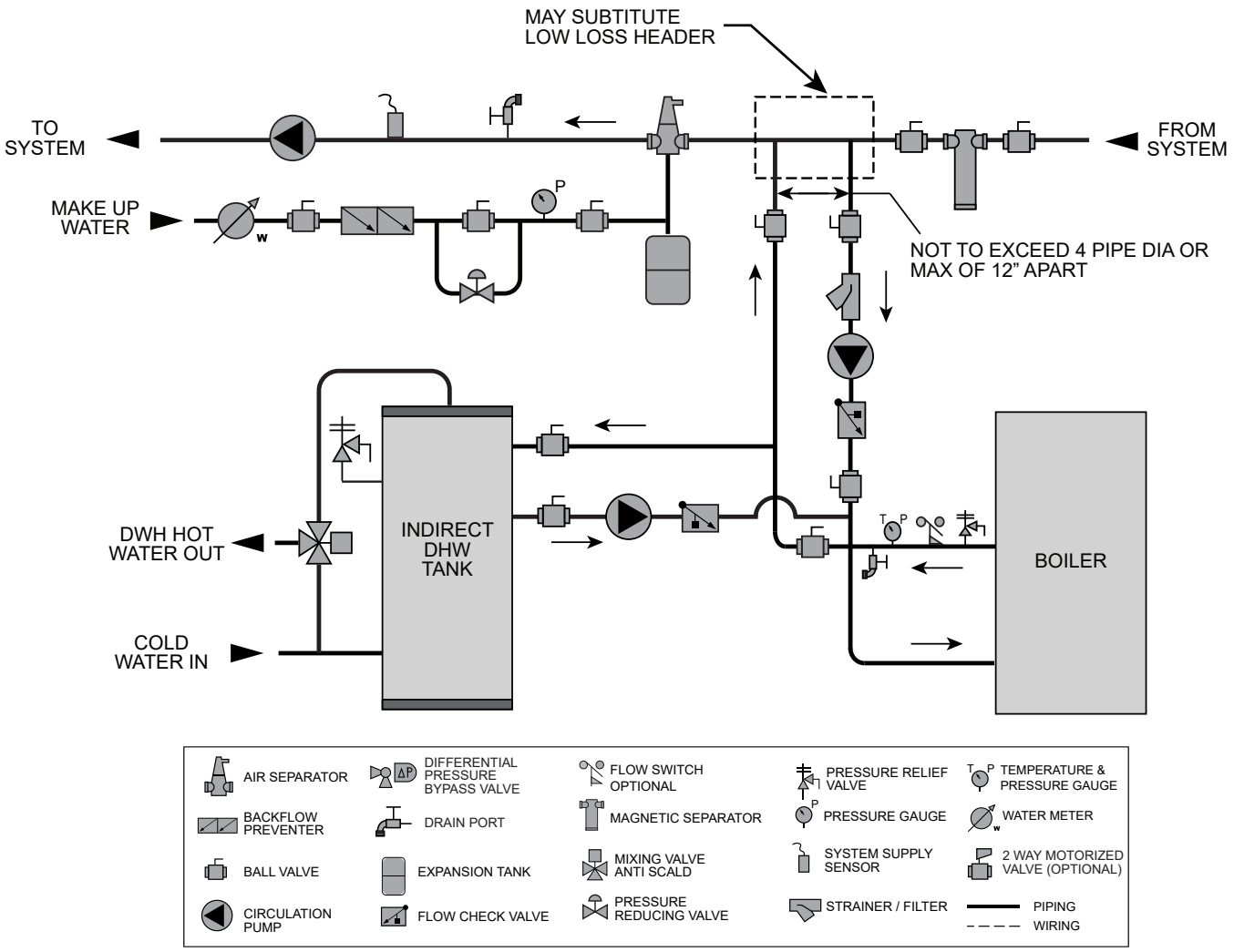

NOTICE System flow should always remain higher than the required flow for the boiler(s) when the boiler(s) is in operation to prevent short cycling and high limit issues.

NOTICE Please note that these illustrations are meant to show piping concepts only, the installer is responsible for all equipment. The installer must follow all manufacturer's installation instructions for each system component. The installer is responsible for compliance with local codes.

5 Hydronic piping

Model	Number of Units						
	2	3	4	5	6	7	8
	Recommended Common Header Pipe Sizes in Inches						
FB 0751	4	4	5	6	6	6	8
FB 1001	4	5	6	6	8	8	8
FB 1251	5	6	8	8	8	8	10
FB 1501	5	6	8	8	8	10	10
FB 1751	5	6	8	8	10	10	10
FB 2001	6	8	8	10	10	10	12
FB 2501	6	8	10	10	12	12	12
FB 3001	8	8	10	12	12	14	14
FB 3501	8	10	10	12	14	14	16
FB 4001	8	10	12	12	14	16	16
FB 5001	10	12	12	14	16	16	18
FB 6001	10	12	14	16	18	18	20
[Based on a boiler ΔT of 30°F.]							

NOTICE A system supply sensor (factory supplied) MUST BE installed for proper boiler operation.

Figure 5-3 *Multiple Boilers - Common Header - Recommended - Primary / Secondary Flow*

* See page 20 for special instructions when common venting Crest boilers.

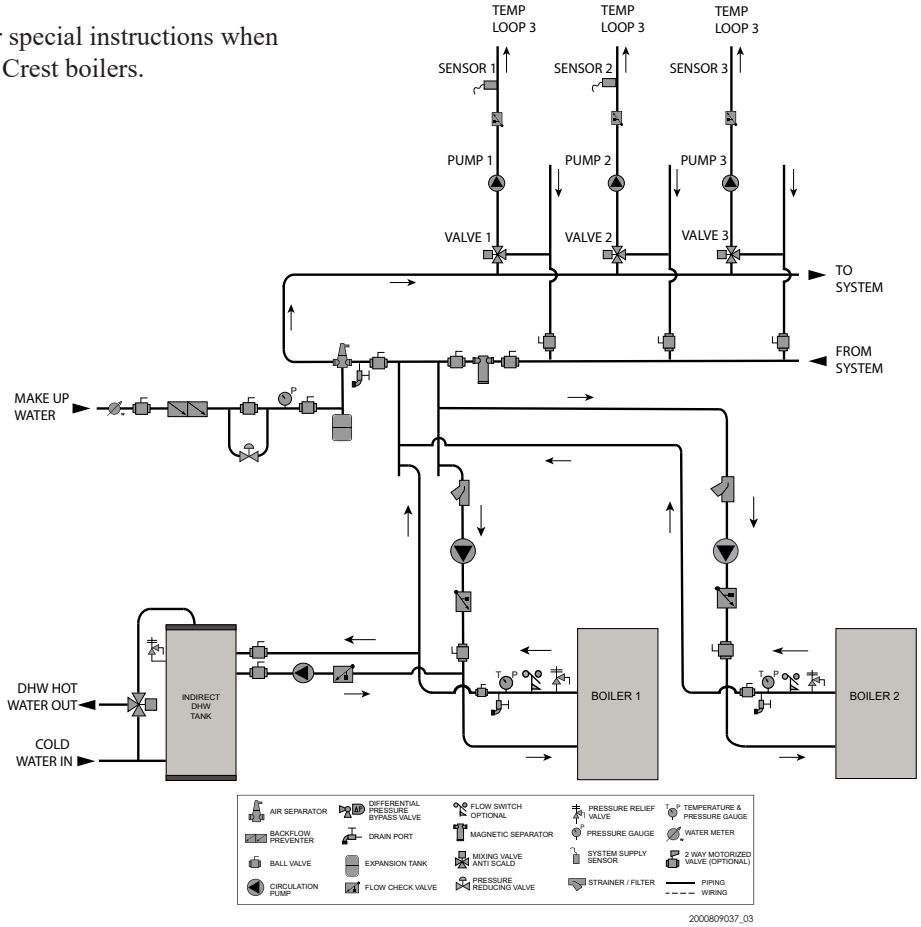

NOTICE System flow should always remain higher than the required flow for the boiler(s) when the boiler(s) is in operation to prevent short cycling and high limit issues.

NOTICE Please note that these illustrations are meant to show piping concepts only, the installer is responsible for all equipment. The installer must follow all manufacturer's installation instructions for each system component. The installer is responsible for compliance with local codes.

5 Hydronic piping *(continued)*

Figure 5-4 *Single Boiler - Alternate - Fixed or Variable Flow Primary System Piping*

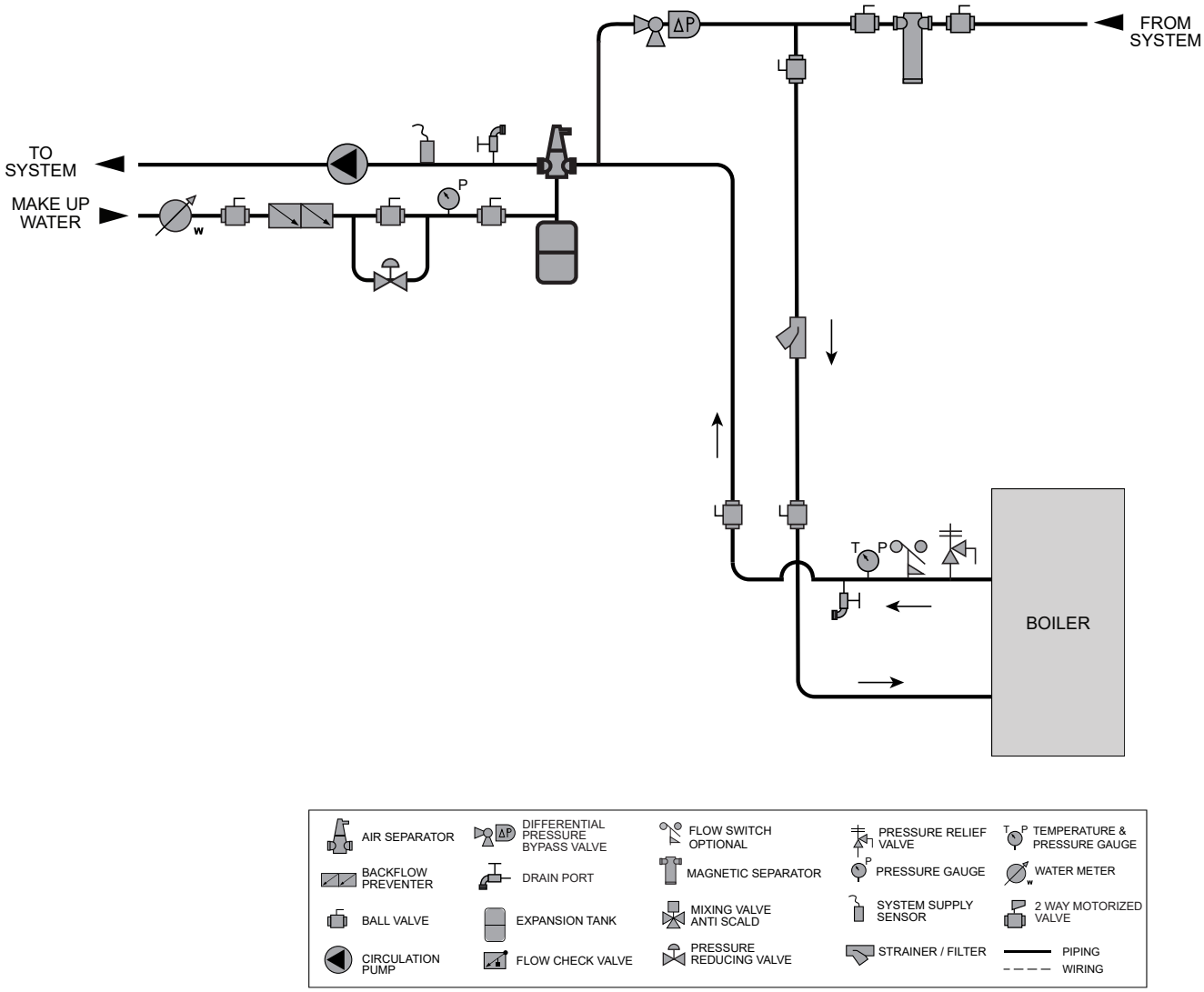

NOTICE Please note that these illustrations are meant to show piping concepts only, the installer is responsible for all equipment. The installer must follow all manufacturer's installation instructions for each system component. The installer is responsible for compliance with local codes.

⚠ CAUTION For fixed or variable flow primary system configuration, a differential bypass is recommended (see Figures 5-4 & 5-5). If the differential bypass is excluded, individual boiler flow rates may exceed the maximum flow allowed, resulting in non-warrantable damage to the heat exchanger, damage to the system piping, and/or pressure relief valve opening causing excessive make-up water and glycol loss.

5 Hydronic piping

Model	Number of Units						
	2	3	4	5	6	7	8
	Recommended Common Header Pipe Sizes in Inches						
FB 0751	4	4	5	6	6	6	8
FB 1001	4	5	6	6	8	8	8
FB 1251	5	6	8	8	8	8	10
FB 1501	5	6	8	8	8	10	10
FB 1751	5	6	8	8	10	10	10
FB 2001	6	8	8	10	10	10	12
FB 2501	6	8	10	10	12	12	12
FB 3001	8	8	10	12	12	14	14
FB 3501	8	10	10	12	14	14	16
FB 4001	8	10	12	12	14	16	16
FB 5001	10	12	12	14	16	16	18
FB 6001	10	12	14	16	18	18	20
[Based on a boiler ΔT of 30°F.]							

Figure 5-5 *Multiple Boilers - Alternate - Common Header - Fixed or Variable Flow Primary*

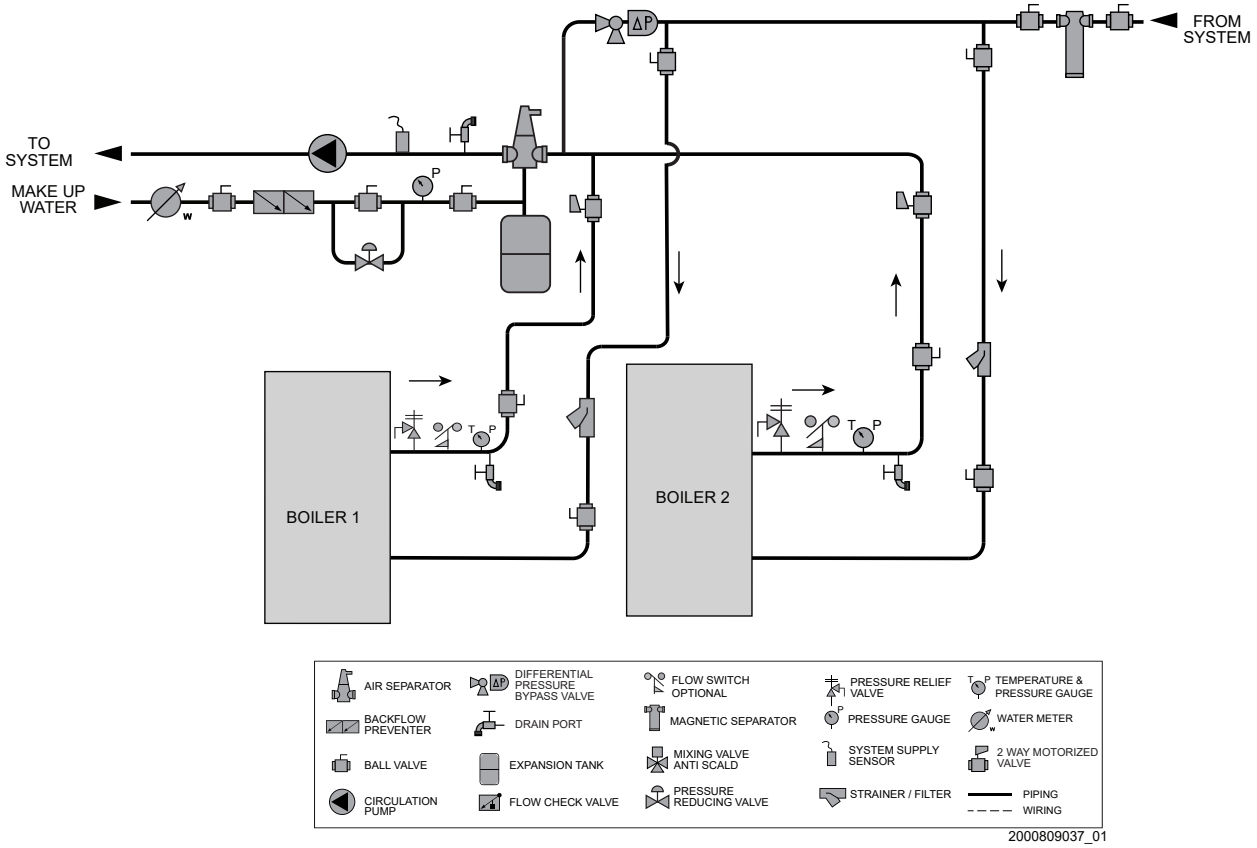

NOTICE Please note that these illustrations are meant to show piping concepts only, the installer is responsible for all equipment. The installer must follow all manufacturer's installation instructions for each system component. The installer is responsible for compliance with local codes.

NOTICE When installing multiple Crest boilers in fixed or variable flow primary applications, utilize a reverse-return or other piping method to ensure balanced flow through each boiler.

⚠ CAUTION For fixed or variable flow primary system configuration, a differential bypass is recommended (see Figures 5-4 & 5-5). If the differential bypass is excluded, individual boiler flow rates may exceed the maximum flow allowed, resulting in non-warrantable damage to the heat exchanger, damage to the system piping, and/or pressure relief valve opening causing excessive make-up water and glycol loss.

6 Gas connections

Gas supply

NOTICE Ensure that the high gas pressure regulator is at least 10 feet (3 m) upstream of the appliance.

NOTICE The gas inlet size has been designed to allow the minimum of 10 feet between the boiler and regulator and for a maximum pressure drop of 1" w.c.

1. It is recommended to install one (1) gas regulator for each Crest boiler.
2. Gas regulators should be installed in a horizontal orientation unless otherwise recommended by the regulator manufacturer.
3. It is recommended to install a filter at the inlet of a gas regulator to prevent debris from entering the regulator.
4. Gas regulators should be installed the greater of either 20 inches or 10 pipe diameters from the nearest fitting, elbow, or valve to the outlet of the regulator.
5. It is recommended that the gas regulator outlet size match the gas inlet size of the boiler and to not change the pipe size between them. If the pipe diameter must be increased, a bell reducer type fitting should be located at the regulator outlet and the boiler inlet, maintaining the distance indicated in Step 4.
6. Gas regulators must be properly vented to ensure proper function:
   a. Vent pipe must be no smaller than the regulator vent connection size.
   b. Each regulator must have a separate vent line.
   c. Vent lines must not be combined together or with any other equipment that also requires atmospheric vents.
   d. Excessive gas regulator vent length will detrimentally affect regulator performance:
   - Gas regulators must be properly vented according to the regulator manufacturer's instructions.
   - It is recommended that regulator vent length not exceed 15 equivalent feet (4.5 m).
   - When regulator vent must exceed 15 equivalent feet, it is recommended to use a ventless regulator equipped with a vent limiter.
   - If a ventless regulator cannot be utilized, it is recommended to increase vent diameter by one pipe size after the initial 15 equivalent feet and every additional 10 equivalent feet.

   e. Proper measures must be taken to prevent water, snow, insects, or other debris from obstructing the vent.

Connecting gas supply piping

NOTICE For dual fuel models, reference the Crest Dual Fuel Supplemental Manual.

1. Refer to FIG. 6-1 to pipe gas to the boiler.
   a. Install ground joint union for servicing, when required.
   b. In Canada – When using manual main shutoff valves, it must be identified by the installer.

Figure 6-1 *Gas Supply Piping*

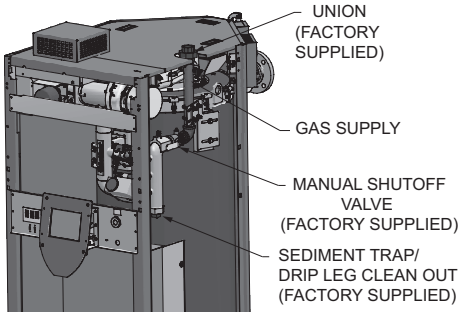

2. Support piping with hangers, not by the boiler or its accessories.

⚠WARNING The gas valve and blower will not support the weight of the piping. Do not attempt to support the weight of the piping with the boiler or its accessories. Failure to comply could result in severe personal injury, death, or substantial property damage.

3. Purge all air from the gas supply piping.
4. Before placing the boiler in operation, check the boiler and its gas connection for leaks.
   a. The appliance must be disconnected from the gas supply piping system during any pressure testing of that system at a test pressure in excess of 1/2 PSIG (3.5 kPa).
   b. The appliance must be isolated from the gas supply piping system by closing a manual shutoff valve during any pressure testing of the gas supply piping system at test pressures equal to or less than 1/2 PSIG (3.5 kPa).
   c. The appliance and its gas connection must be leak tested before placing it in operation.

⚠WARNING Do not check for gas leaks with an open flame – use the bubble test. Failure to use the bubble test or check for gas leaks can cause severe personal injury, death, or substantial property damage.

5. Use pipe sealing compound compatible with propane gases. Apply sparingly only to male threads of the pipe joints so that pipe dope does not block gas flow.

⚠WARNING Failure to apply pipe sealing compound as detailed in this manual can result in severe personal injury, death, or substantial property damage.

Table 6A *Gas Inlet Size*

Model	Gas Inlet Size
FB0751 - FB1001	1 1/4"
FB1251 - FB2001	1 1/2"
FB2501 - FB3501	2"
FB4001 - FB5001	2 1/2"
FB6001	3"

6 Gas connections

⚠WARNING Use two wrenches when tightening gas piping at boiler (FIG. 6-2), using one wrench to prevent the boiler gas line connection from turning. Failure to support the boiler gas connection pipe to prevent it from turning could damage gas line components.

Figure 6-2 *Inlet Pipe with Backup Wrench*

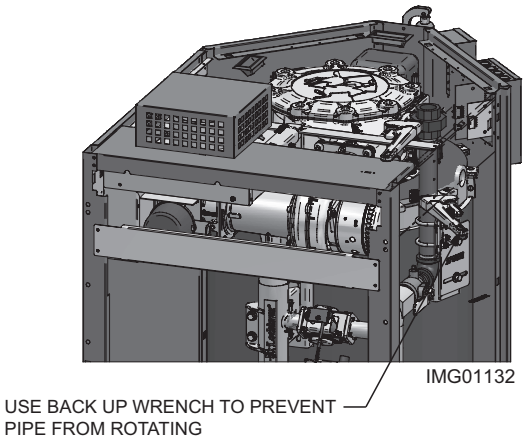

NOTICE Maximum inlet gas pressure must not exceed the value specified. Minimum value listed is for the purposes of input adjustment.

Natural gas:

⚠WARNING Check boiler rating plate to determine which fuel the boiler is set for. Crest boilers CANNOT be field converted. Failure to comply could result in severe personal injury, death, or substantial property damage.

Pipe sizing for natural gas

1. Refer to Table 6B for pipe length and diameter. Based on rated boiler input (divide by 1,000 to obtain cubic feet per hour).
   a. Table 6B is only for natural gas with specific gravity 0.60, with a pressure drop through the gas piping of 0.3 inches w.c.
   b. For additional gas pipe sizing information, refer to the National Fuel Gas Code, NFPA 54 / ANSI Z223.1 - latest edition, or in Canada CSA B149.1 Installation Code.

Natural gas supply pressure requirements

1. Target a supply pressure of 7 inches w.c. (1.7 kPa) measured when the boiler is operating at minimum input rate. Gas pressure can be adjusted higher or lower than 7 inches w.c. as needed.
2. Pressure required at the gas valve inlet pressure port:
   • Maximum 14 inches w.c. (3.5 kPa) with boiler operating.
   • Minimum 4 inches w.c. (.99 kPa) with boiler operating.
3. Install 100% lockup gas pressure regulator in supply line for each boiler if inlet pressure exceeds 14 inches w.c. (3.5 kPa).
4. Gas valves used on Crest boilers are rated for at least 27 inches w.c. (6.7 kPa).

Propane Gas:

⚠WARNING Check boiler rating plate to determine which fuel the boiler is set for. Crest boilers CAN NOT be field converted. Failure to comply could result in severe personal injury, death, or substantial property damage.

Pipe sizing for propane gas

1. Contact gas supplier to size pipes, tanks, and 100% lockup gas pressure regulator.

Propane Supply Pressure Requirements

1. Target a supply pressure of 11 inches w.c. (2.7 kPa) measured when the boiler is operating at minimum input rate. Gas pressure can be adjusted higher or lower than 11 inches w.c. as needed.
2. Adjust propane supply regulator provided by the gas supplier for 14 inches w.c. (3.5 kPa) maximum pressure.
3. Pressure required at gas valve inlet pressure port:
   • Maximum 14 inches w.c. (3.5 kPa) with boiler operating.
   • Minimum 8 inches w.c. (1.99 kPa) with boiler operating.

Figure 6-3 *Gas Supply Piping to Regulator*

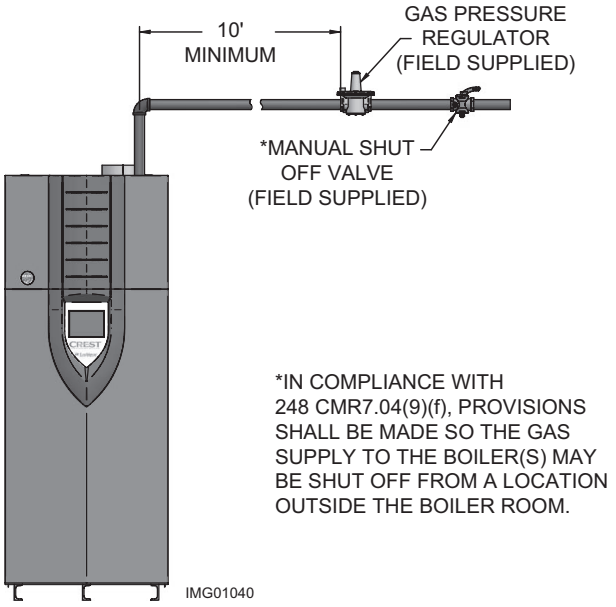

6 Gas connections *(continued)*

***Table 6B** Natural Gas Pipe Size Chart*

TABLE - 6B Capacity of Schedule 40 Metallic Pipe in Cubic Feet of Natural Gas Per Hour (based on .60 specific gravity, 0.30" w.c. pressure drop)														
Pipe Size (Inches)	Length of Pipe in Straight Feet													
	10	20	30	40	50	60	70	80	90	100	125	150	175	200
1/2	131	90	72	62	55	N/A	N/A	N/A	N/A	N/A	N/A	N/A	N/A	N/A
3/4	273	188	151	129	114	104	95	89	83	79	70	63	58	N/A
1	514	353	284	243	215	195	179	167	157	148	131	119	109	102
1 1/4	1,060	726	583	499	442	400	368	343	322	304	269	244	224	209
1 1/2	1,580	1,090	873	747	662	600	552	514	482	455	403	366	336	313
2	3,050	2,090	1,680	1,440	1,280	1,160	1,060	989	928	877	777	704	648	602
2 1/2	4,860	3,340	2,680	2,290	2,030	1,840	1,690	1,580	1,480	1,400	1,240	1,120	1,030	960
3	8,580	5,900	4,740	4,050	3,590	3,260	3,000	2,790	2,610	2,470	2,190	1,980	1,820	1,700
4	17,500	12,000	9,660	8,270	7,330	6,640	6,110	5,680	5,330	5,040	4,460	4,050	3,720	3,460

Check inlet gas supply

⚠WARNING DO NOT adjust or attempt to measure gas valve outlet pressure. Attempting to alter or measure the gas valve outlet pressure could result in damage to the valve, causing potential severe personal injury, death, or substantial property damage.

The gas piping must be sized for the proper flow and length of pipe, to avoid excessive pressure drop. Both the gas meter and the gas regulator must be properly sized for the total gas load.

If gas pressure drops more than 1 inch w.c. (249 Pa) between maximum and minimum input rate, the meter, regulator, or gas line may be undersized or in need of service. Perform the steps below when checking inlet gas supply:

1. Turn the main power switch to the "OFF" position.
2. Shut off gas supply at the manual gas valve in the gas piping to the appliance.
3. **For Crest models (751-2001):** Remove the 1/8" pipe plug on the gas manifold before the gas valve, and install a suitable 1/8" fitting (field supplied) for the manometer tubing. Place the tubing of the manometer over the tap once the 1/8" fitting is installed as shown in FIG. 6-4.

   For Crest models (2501-6001): Remove the 1/8" pipe plug on the large gas valve flange before the gas valve, and install a suitable 1/8" fitting (field supplied) for the manometer tubing. Place the tubing of the manometer over the tap once the 1/8"fitting is installed as shown in FIG. 6-4.
4. Slowly turn on the gas supply at the factory installed manual gas valve.
5. Turn the power switch to the "ON" position.
6. Adjust the temperature set point on the control panel of the SMART TOUCH control module to call for heat or utilize Service Mode, see page 51 of this manual.
7. Observe the gas pressure with the burner operating at 100% of rated input. Without turning off the boiler, reduce the burner to the minimum input rate and observe the gas pressure with the burner at the minimum input rate. Percent of burner input will be displayed on the Modulation Screen.
8. Ensure inlet pressure is within specified range. Minimum and maximum gas supply pressures are specified in this section of the manual.
9. If gas supply pressure is within normal range and no adjustments are needed, proceed on to Step 11.
10. If the gas pressure is out of range, contact the gas utility, gas supplier, qualified installer or service agency to determine the necessary steps to provide proper gas pressure to the control.
11. Turn the power switch to the "OFF" position.
12. Shut off the gas supply at the manual gas valve in the gas piping to the appliance.
13. Remove the manometer from the pressure tap on the gas manifold or gas valve flange, depending on model size. Remove the 1/8" (3 mm) field supplied fitting and reinstall the pipe plug removed in Step 3.

6 Gas connections

⚠WARNING Do not check for gas leaks with an open flame -- use the bubble test. Failure to use the bubble test or check for gas leaks can cause severe personal injury, death, or substantial property damage.

14. Turn on the gas supply at the manual gas valve.
15. Turn the power switch to the "ON" position.
16. Adjust the temperature set point on the control panel of the SMART TOUCH control module to the desired water temperature so the appliance will call for heat.
17. Check burner performance by cycling the system while you observe burner response. The burner should ignite promptly. Flame pattern should be stable. Turn system off and allow burner to cool, then cycle burner again to ensure proper ignition and flame characteristics.

Figure 6-4A *Inlet Gas Supply Check - model 751-2001*

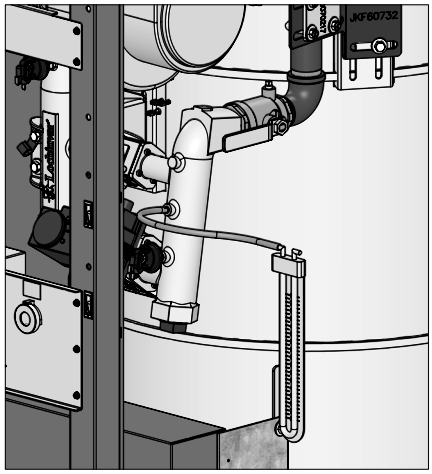

Figure 6-4B *Inlet Gas Supply Check - model 2501-6001*

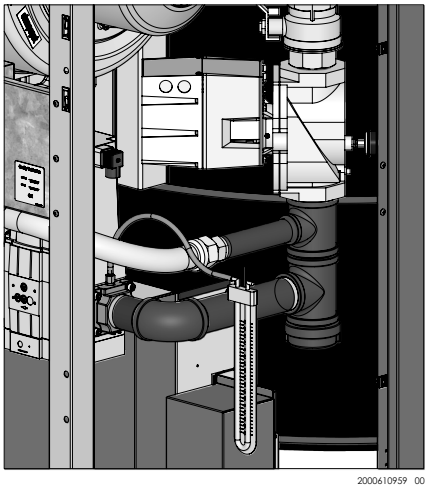

Gas valve replacement

⚠WARNING The gas valve MUST NOT be replaced with a conventional gas valve under any circumstances. Failure to follow all precautions could result in fire, explosion, or death!

⚠WARNING DO NOT adjust or attempt to measure gas valve outlet pressure. Attempting to alter or measure the gas valve outlet pressure could result in damage to the valve, causing potential severe personal injury, death, or substantial property damage.

7 Field wiring

⚠ WARNING ELECTRICAL SHOCK HAZARD – For your safety, turn off electrical power supply before making any electrical connections to avoid possible electric shock hazard. Failure to do so can cause severe personal injury or death.

NOTICE Wiring must be N.E.C. Class 1.

If original wiring as supplied with boiler must be replaced, use only type 105°C wire or equivalent.

Boiler must be electrically grounded as required by National Electrical Code ANSI/NFPA 70 – latest edition.

⚠ CAUTION Label all wires prior to disconnection when servicing controls. Wiring errors can cause improper and dangerous operation.

Installation must comply with:

1. National Electrical Code and any other national, state, provincial, or local codes, or regulations.
2. In Canada, CSA C22.1 Canadian Electrical Code Part 1, and any local codes.

Line voltage connections - Models 751 - 2001, 120 VAC, 1PH

1. Connect 120 VAC 1PH power wiring to the line voltage terminal strip in the junction box, as shown in FIG. 7-1.
2. Provide and install a fused disconnect or service switch sized per the boiler amp draw (shown on the boiler rating plate) as required by the code (see FIG. 7-1).
3. When connecting the boiler, system and hot water generator pumps connect the wiring to the line voltage terminal strip as shown in FIG. 7-1. Maximum current is 1.5 amps. Install a field supplied contactor between the pump(s) and the boiler connections.
4. For alternate voltages, consult factory.

Line voltage connections - Models 2501 - 3501 208 VAC 3PH / 4001 - 6001 480 VAC 3PH

1. Connect 208 / 480 VAC 3PH Wye power wiring to the line voltage terminal strip in the junction box, as shown in FIG. 7-1.
2. Provide and install a fused disconnect or service switch sized per the boiler amp draw (shown on the boiler rating plate) as required by the code (see FIG. 7-1).
3. When connecting the boiler, system and hot water generator pumps connect the wiring to the line voltage terminal strip as shown in FIG. 7-1. Maximum current is 1.5 amps. Install a field supplied contactor between the pump(s) and the boiler connections.
4. For alternate voltages, consult factory.

***Figure 7-1 Boiler** Line Voltage Field Wiring Connections*

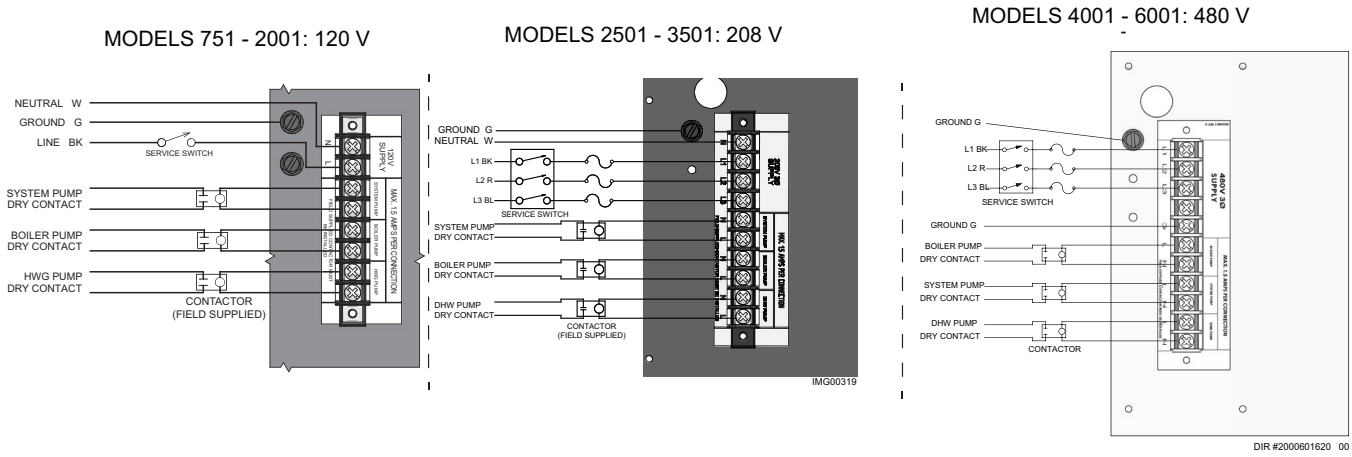

7 Field wiring

Low voltage connections

1. Route all low voltage wires through the knockouts in the rear of the boiler, as shown in FIG. 7-2.
2. Connect low voltage wiring to low voltage connection board as shown in FIG. 7-3 on page 44 of this manual and the boiler wiring diagram.

Figure 7-2 *Routing Field Wiring*

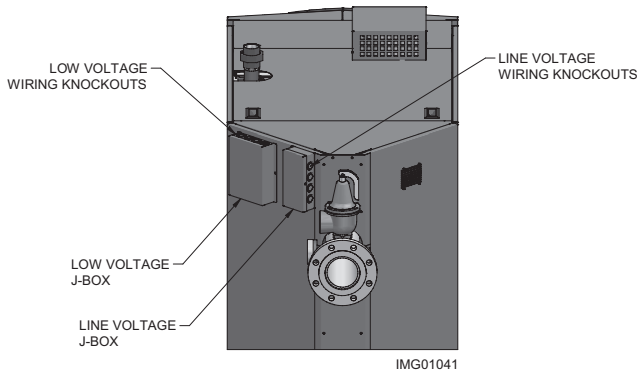

Enable

1. Connect the room thermostat or boiler enable contacts (isolated contact only) to terminals 7 and 8, as shown in FIG. 7-3.
2. If a thermostat is used, install the thermostat on the inside wall away from influences of drafts, hot or cold water pipes, lighting fixtures, television, sunlight, or fireplaces.
3. Thermostat anticipator (if applicable):
   a. If connected directly to boiler, set for 0.1 amps.
   b. If connected to relays or other devices, set to match total electrical power requirements of connected devices. See device manufacturers' specifications and thermostat instructions for details.

Outdoor temperature sensor

1. Connect the outdoor temperature sensor (FIG. 7-3) to the Outdoor Sensor terminals on the connection board to enable outdoor reset operation of the Crest.
2. Mount the sensor on an exterior wall, shielded from direct sunlight or flow of heat or cooling from other sources.
3. Route sensor wires through a knockout at the rear of the boiler (see FIG. 7-2).

Variable speed system pump

If a variable speed pump is used in the primary loop, and a 0-10V signal is available from the pump speed control, this signal can be used by the SMART TOUCH control to anticipate changes in the building heat load. By connecting this 0 - 10V signal to the 0 - 10V SYS PUMP IN terminals, the boiler (or cascade) can modulate up and down as the primary flow increases and decreases.

ModBus / BACnet

The RS-485 ModBus / BACnet cable is connected to the ModBus terminals. Use shielded, 2-wire twisted pair cable. If desired, the shield can be connected to ground by installing a jumper wire between terminals 1 and 3 on connector X5 on the ModBus interface module.

Hot Water Generator (HW) thermostat

1. Connect the HW tank thermostat to the Tank Thermostat terminals on the connection board (FIG. 7-3).

Hot Water Generator (HW) tank sensor

1. By installing a HW tank sensor, the SMART TOUCH control can perform the tank thermostat function. The SMART TOUCH control automatically detects the presence of this sensor, and generates a HW call for heat when the tank temperature drops 6°F (3°C) below the tank set point, and finishes the call for heat when the tank temperature reaches the tank set point.
2. A #100170544 sensor MUST be used with any indirect tank. Failure to use the correct sensor will result in the tank temperature being either above or below the set point. Connect the correct sensor to the Tank Sensor terminals (see FIG. 7-3).

NOTICE See page 20 for special instructions when common venting Crest boilers.

Louver relay

If louvers need to operate before the boiler fires, they can be controlled by this output. Connect these terminals to a 24V relay coil, which is wired to operate the louvers (FIG. 7-3).

Louver proving switch

Louvers are used to provide combustion air for the room air option. A louver proving switch should be connected to the appropriate terminals and are verified prior to operation (see FIG. 7-3).

Boiler pump speed output

This 0 - 10V output is available to control the speed of a variable speed boiler pump. The SMART TOUCH control will vary the speed of this pump in order to maintain a minimum ΔT (set by the installer, see the Crest Service Manual) across the heat exchanger, as well as prevent high limit lockouts when the flow in the primary loop is extremely low. Connect this output to the 0 - 10V input on the boiler pump speed control.

NOTICE The system supply temperature must be provided for this feature to work. The temperature can be sensed directly with a system supply sensor, or sent through ModBus/BACnet. This feature is to be used with primary /secondary piping systems.

Rate output

This output provides a 0 - 10V signal that is proportional to the firing rate of the boiler. This may be used by a BMS system to monitor the actual rate of the boiler.

7 Field wiring *(continued)*

Auxiliary switch 1 & 2

Additional field supplied limit controls may be connected to the auxiliary switch inputs. If additional limit controls fail or open, it will result in a manual reset lockout.

System supply sensor

1. By installing the system supply sensor into the supply of the primary loop, the temperature of the system supply can be controlled. The SMART TOUCH control automatically detects the presence of this sensor, and controls the boiler firing rate to maintain the system supply temperature to the set point.

NOTICE DO NOT INSTALL THE SYSTEM SUPPLY SENSOR INTO THE SYSTEM RETURN.

2. For system supply sensor wiring information reference (FIG. 7-3).

NOTICE Unless a firing rate is being provided by a BMS system, a system supply sensor (factory supplied) MUST BE installed with Primary/Secondary piping systems for proper boiler operation.

Boiler management system

1. An external control may be connected to control either the firing rate or the set point of the boiler. Connect the 0 - 10 VDC terminals to the 0 - 10 VDC output of the external control. The SMART TOUCH control can be enabled using the Enable output (see page 44) or using the voltage applied to the 0 - 10 VDC input. Reference the Crest Service Manual for more details.

2. Make sure terminal #34 on the Low Voltage Connection Board is connected to the (-) or COM output terminal of the external control, and 0 - 10 VDC terminal #33 is connected to the 0 - 10 VDC terminal of the external control.

Runtime contacts

The SMART TOUCH control closes a set of dry contacts whenever the burner is running. This is typically used by Building Management Systems to verify that the boiler is responding to a call for heat.

Alarm contacts

The SMART TOUCH control closes another set of contacts whenever the boiler is locked out or the power is turned off. This can be used to turn on an alarm, or signal a Building Management System that the boiler is down.

System return sensor

1. Install the system return sensor into the return of the primary loop.
2. Connect the terminals to the system return sensor as shown in FIG. 7-3.

Wiring of the cascade

When wiring the boilers for Cascade operation, select one boiler as the Leader boiler. The remaining boilers will be designated as Members. See page 54 “Configuration of the Cascade” for a detailed explanation of this procedure.

Connect the system supply sensor and outdoor air sensor (if used) to the Leader boiler. For the Cascade system to work properly the system supply sensor must be installed. The location of the system supply sensor should be downstream of the boiler connections in the main system loop (FIG.’s 5-2 through 5-5). The system supply sensor should be wired to the Low Voltage Connection Board at the terminals marked for the system sensor (see FIG. 7-3). The Leader control will use the water temperature at the system supply sensor to control the operation of the Cascade.

If outdoor air reset is desired, the outdoor air sensor should be wired to the Low Voltage Connection Board at the terminals marked for the outdoor air sensor (FIG. 7-3). If the outdoor air sensor is connected, the Leader control will calculate the water temperature set point based on the programmed reset curve parameters. If the outdoor air sensor is not connected, the Leader control will maintain the fixed water temperature set point that is programmed into the control.

If a Thermostat or Zone Control Enable output is available, it should be wired to the Low Voltage Connection Board on the Leader boiler at the terminals marked Enable (FIG. 7-3). If the boilers are to run continuously, connect a jumper wire between the R and W terminals for the Enable input. This will initiate a call for heat on the Cascade.

Communication between the Leader boiler and the Member boilers is accomplished by using shielded, 2-wire twisted pair communication cable. Connect one of the twisted pair wires to Cascade terminal A on each of the Low Voltage Connection boards, and the other wire of the twisted pair to Cascade terminal B on each of the Low Voltage Connection Boards. Connect the shield wires to one of the shield terminals on the Low Voltage Connection Boards (FIG. 7-3). If more than two boilers are on the Cascade, daisy chain the wiring from the Cascade terminals on the second boiler to the Cascade terminals on the third boiler, then from the third to the forth, and so on. The connections between boilers can be made in any order, regardless of the addresses of the boilers. Try to keep each cable as short as possible.

When the Member 1 boiler is programmed as an alternate leader this allows the Member 1 boiler to automatically assume control of the Cascade should it lose communication with the Leader boiler. When programmed to YES, it is recommended that the Member 1 boiler have its own set of external sensors installed (such as the system supply sensor), to maintain the same level of temperature control as with the Leader boiler. Voltage signals (such as 0 - 10V system pump speed input) can be connected to both boilers.

7 Field wiring

Figure 7-3 *Low Voltage Field Wiring Connections*

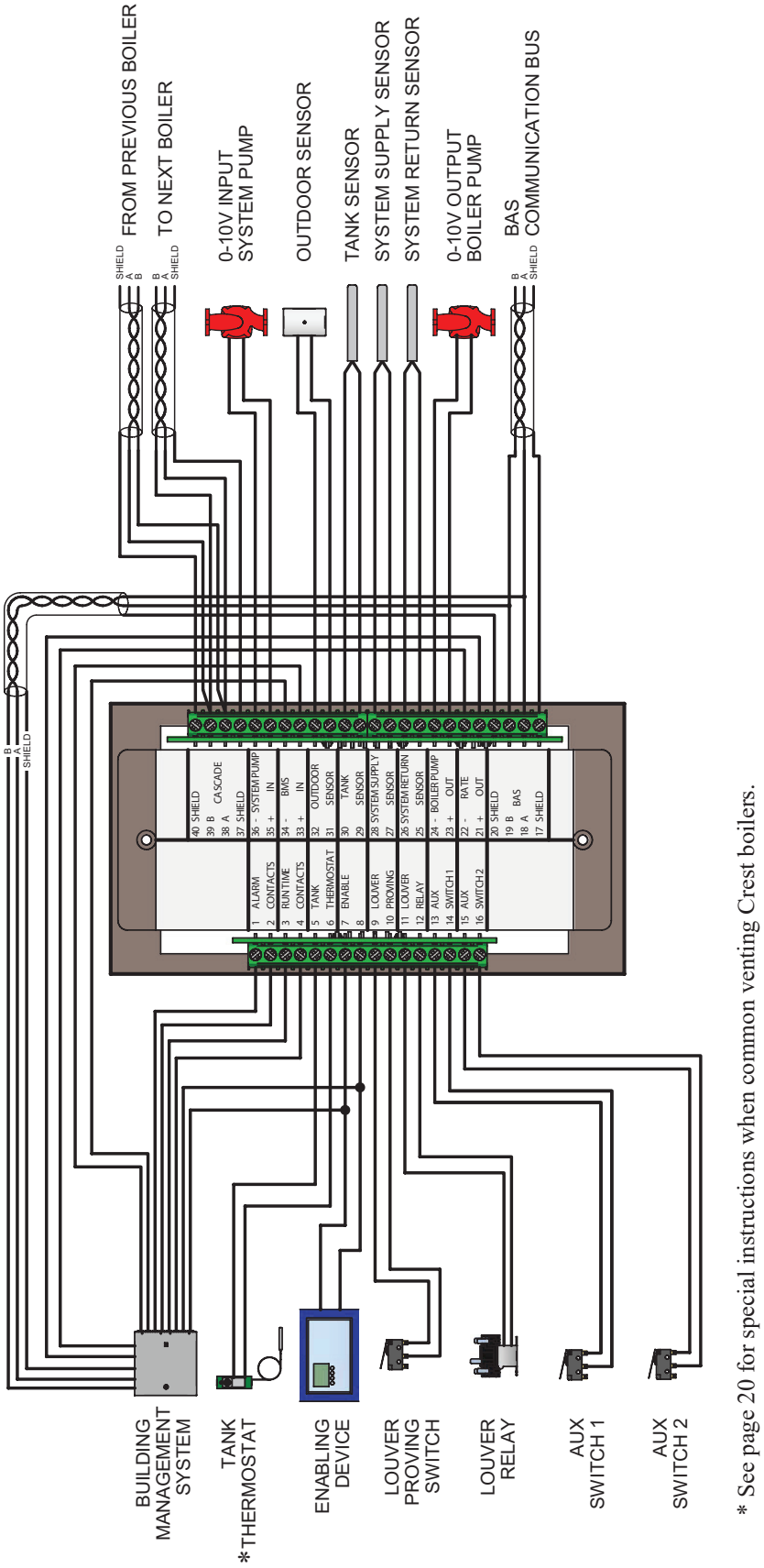

* See page 20 for special instructions when common venting Crest boilers.

8 Condensate disposal

Condensate drain

1. The Crest is a high efficiency appliance that produces condensate.
2. The rear of the boiler has a 1 inch (25.4 mm) stainless steel drain fitting and a 3/8 inch (9.8 mm) stainless steel vent line for connection to the condensate trap.
3. Connect the 1 inch (25.4 mm) fitting to the 1 inch (25.4 mm) fitting on the condensate trap with the factory supplied silicone hose. Secure the hose to the condensate trap and the boiler using the factory supplied hose clamps.
4. Connect the 3/8 inch (9.8 mm) fitting to the 3/8 inch (9.8 mm) fitting on the condensate trap (shipped loose) with the factory supplied silicone hose. Secure the hose to the condensate trap and the boiler using the factory supplied hose clamps.
5. The condensate trap must be installed at the same level or below the boiler base.
6. The condensate trap is sized for a 1" PVC outlet connection pipe.
7. Plug the wiring connection from the condensate trap into the connector located on the back of the unit.
8. Slope condensate tubing down and away from the boiler into a drain or condensate neutralizing filter. Condensate from the Crest will be slightly acidic (typically with a pH from 3 to 5). Install a neutralizing filter if required by local codes.

   A neutralizer kit (FIG. 8-1) is available from the factory. The neutralizer kit must be placed on a surface that is a minimum of 3 inches lower than the condensate trap with field supplied piping (vacuum break) installed between the condensate trap and the neutralizer kit.
9. Do not expose condensate line to freezing temperatures.

NOTICE Use materials approved by the authority having jurisdiction. In the absence of other authority, PVC and CPVC pipe must comply with ASTM D1785 or D2845. Cement and primer must comply with ASME D2564 or F493. For Canada use CSA or ULC certified PVC or CPVC pipe, fittings, and cement.

NOTICE To allow for proper drainage on large horizontal runs, a second line vent may be required and tubing size may need to increase to 1 inch (25 mm).

The condensate line must remain unobstructed, allowing free flow of condensate. If condensate is allowed to freeze in the line or if the line is obstructed in any other manner, condensate can exit from the boiler tee, resulting in potential water damage to property.

10. A condensate removal pump is required if boiler is below the drain. When installing a condensate pump, select one approved for use with condensing boilers and furnaces. The pump should have an overflow switch to prevent property damage from condensate spillage. The switch should be wired to the auxiliary device proving switch terminals on the low voltage connection board.

Figure 8-1 *Condensate Disposal*

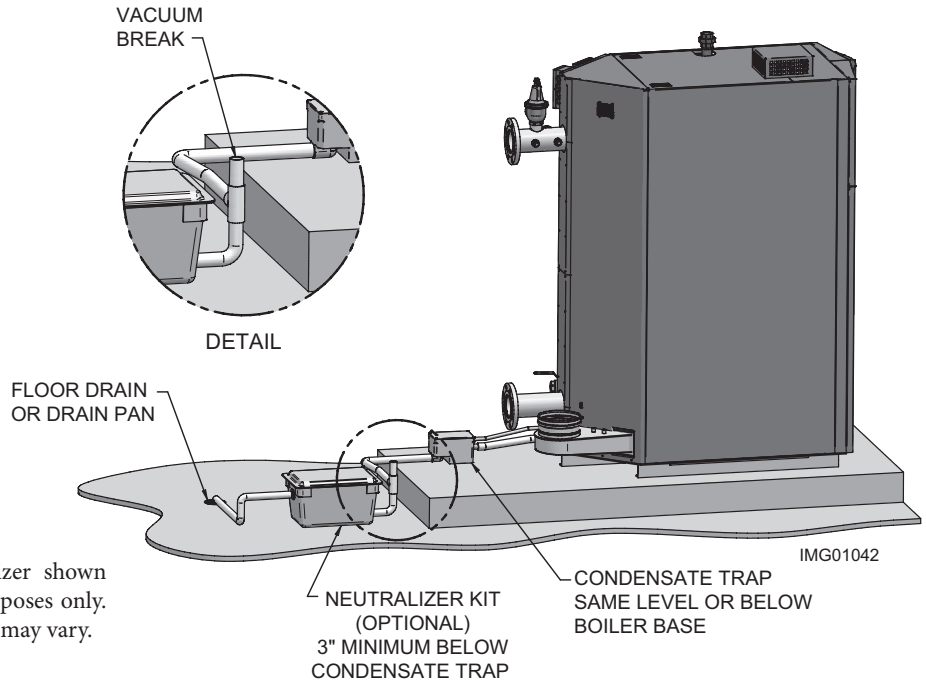

NOTE: Neutralizer shown for illustrative purposes only. Actual neutralizer may vary.

9 Start-up

Pre-Commissioning Cleaning

CAUTION Do not use petroleum-based cleaning or sealing compounds in the boiler system. Gaskets and seals in the system may be damaged. This can result in substantial property damage.

CAUTION DO NOT flush the cleaning solution and debris from the system through the boiler.

1. Prior to fill and start-up, flush the entire heating system.
2. Isolate the boiler and clean the entire heating system with an approved pre-commissioning cleaner (comparable to Sentinel X300 and Fernox F3) in accordance with the manufacturer's recommendation to remove debris and prolong the life of the heat exchanger.
3. Clean all water filtering devices in the system.
4. Flush the cleaning solution out of the entire system and refill.

Check/control Fill Water chemistry

IMPORTANT Conduct water quality testing prior to installing the appliance. Various options are available to adjust water quality.

CAUTION DO NOT fill the system with distilled or reverse osmosis water. Lochinvar recommends filling with demineralized water when treatment is necessary.

Chloride Concentration

1. Do not fill boiler with water containing chlorine in excess of 150 ppm.
2. Do not use the boiler to directly heat swimming pool or spa water.

Iron Concentration

1. Do not fill boiler with water containing iron in excess of 0.3 ppm.

Lochinvar recommends the following for properly filling your boiler with the appropriate water chemistry for closed loop boilers. Good boiler water quality will help extend the life of the appliance by reducing the effects of magnetite scale build-up and corrosion in closed loop systems.

Fill Water / Make-Up Water	
TDS	< 350 ppm
pH Level	6.5 - 9.5
Chlorides	< 150 ppm
Iron	< 0.3 ppm

Fill Water / Make-Up Water

1. Initial system fill must meet the recommended values of hardness for boiler water / make-up water. This may require water treatment such as using demineralizers.
2. Consult local water treatment companies for hard water areas (above the values listed in Table 9A). Hardness levels that are above the values listed in Table 9A can lead to lime scale build-up throughout the boiler system.
3. Fill Water recommendations meet or exceed the EPA primary and secondary water standards. Not all items from the standards are listed. See the EPA Standards for a complete list of water quality guidelines.

Boiler Water & Fill Water / Make-Up Water Hardness Specifications

Table 9A provides guidelines for the maximum allowable hardness levels for both the boiler water and the make-up water based on the system volume. There are two (2) levels of allowable hardness depending on the size of the system.

Table 9A *Boiler Water & Fill Water / Make-Up Water Hardness Specifications*

	Level I	Level II
System Volume	≤ 1,000 gal	> 1,000 gal
Total Hardness	≤ 12 gpg	≤ 9 gpg

Boiler Water Specifications

Table 9B *Additional Boiler Water Specifications*

	Boiler Water
Total Dissolved Solids	≤ 2,000 ppm
pH Level	7.0 - 11.0
Chlorides	< 150 ppm

NOTICE If the boiler water iron levels exceed the value recommended for Fill Water / Make-Up Water it will be necessary to install a magnetic separator and treat the boiler water with an approved multi-metal corrosion inhibitor.

A Magnetic Separator is recommended any time a boiler is retrofitted into a pre-existing system, or installed in any system containing steel or cast iron pipe.

9 Start-up *(continued)*

Additional Considerations

1. Monitoring pH, chlorides, TDS, and hardness levels can prolong the life of the appliance by reducing the effects of magnetite and scale build-up, corrosion, and erosion. Check for leaks to ensure that fresh water is not entering the system.
2. Continual fresh make-up water will reduce boiler life.
3. Scale build-up in the heat exchanger reduces heat transfer, overheats the stainless steel heat exchanger, and causes failure.
4. The addition of oxygen carried in by make-up water can cause internal corrosion in the system components.
5. Leaks in the boiler or piping must be repaired at once to prevent excessive make-up water. For this purpose, it is recommended to install a water meter to easily check the amount of make-up water entering the system. Make-up water volume should not exceed 5% of the total system volume per year. NOTE: When make-up water is added, make sure the chemical additives are added to maintain the correct level.
6. An approved multi-metal corrosion inhibitor (comparable to Sentinel X100 or Fernox F1) is recommended at the correct concentration and in the manner recommended by the manufacturer.

Freeze protection fluids

⚠WARNING Lochinvar recommends inhibited propylene glycol solutions which are specifically formulated for hydronic systems. Never use automotive antifreeze.

1. Use glycol only if needed for freeze protection fluid.
2. Make sure to flush the boiler system before adding glycol.
3. Determine the freeze protection fluid quantity using system water content, following the fluid manufacturer's instructions. Boiler water content is listed on page 6. Remember to include expansion tank water content.
4. Local codes may require a backflow preventer or actual disconnect from city water supply.
5. When using freeze protection fluid with automatic fill, it is suggested to install a water meter to monitor water makeup. Freeze protection fluid may leak before the water begins to leak, causing the concentration to drop, which reduces the freeze protection level.
6. The freeze protection set points may be lowered when freeze protection fluid is used (see the Crest Service Manual).
7. Consult the glycol manufacturer for details on the suggested mix of glycol and water for the desired freeze protection level and the de-rate effect it will have on the boiler output.

Test / replace freeze protection fluid

1. For systems using freeze protection fluids, follow the fluid manufacturer's instructions.
2. Freeze protection fluid must be replaced periodically due to degradation of inhibitors over time.
3. It is recommended to test the glycol concentration annually and adjust within the desired set points.

Oxygen prevention

CAUTION Eliminate all system leaks. Continual fresh makeup water will reduce boiler life. Scale can build up in the heat exchanger, reducing heat transfer, overheating the heat exchanger, and causing heat exchanger failure.

Dissolved oxygen can have a negative effect on the boiler system. Oxygen can cause iron oxide to generate iron deposits. Oxygen may also increase the rate of corrosion on non-stainless steel parts of the system. A low pH level combined with oxygen further enhances its corrosive effects. After boiler installation, check for air leaks in the following areas:

- Suction gasket
- Pump
- Air valve
- O-ring gaskets

Precautions include installing a water meter to evaluate the fresh water volume entering the system (should be no more than 5% system volume). Additional volumes of fresh water could indicate that a leak is present.

Fill and test water system

1. Fill system only after ensuring the water meets the requirements of this manual.
2. Close automatic and manual air vents and boiler drain valve.
3. Fill to correct system pressure. Correct pressure will vary with each application.
   a. The minimum cold water fill pressure for a system is 12 psi.
   b. Pressure will rise when the boiler is turned ON and system water temperature increases.
4. At initial fill and during boiler startup and testing, check the system thoroughly for any leaks. Repair all leaks before proceeding further.

9 Start-up

Purge air from water system

1. Purge air from system:
   a. Connect a hose to the purge valve (see purge/drain valve in the piping diagrams on pages 33 through 36). Route the hose to an area where water can drain and be seen.
   b. Close the boiler or system isolation valve between the purge valve and fill connection to the system.
   c. Close zone isolation valves.
   d. Open the quick-fill valve on the cold water makeup line.
   e. Open purge valve.
   f. Open the isolation valves one zone at a time. Allow water to run through the zone, pushing out the air. Run until no noticeable air flow is present. Close the zone isolation valves and proceed with the next zone. Follow this procedure until all zones are purged.
   g. Close the quick-fill water valve and purge valve and remove the hose. Open all isolation valves. Watch that system pressure rises to correct cold-fill pressure.
   h. After the system has operated for a while, eliminate any residual air by using the manual air vents located throughout the system.
   i. If purge valves are not installed in the system, open the manual air vents in the system one at a time, beginning with the lowest floor. Close the vent when water squirts out. Repeat with remaining vents.

2. Open the automatic air vent (diaphragm-type or bladder type expansion tank systems only) one turn.

3. Open other vents:
   a. Starting on the lowest floor, open air vents one at a time until water squirts out.
   b. Repeat with remaining vents.

4. Refill to correct pressure.

Check for gas leaks

⚠WARNING Before starting the boiler, and during initial operation, smell near the floor and around the boiler for gas odorant or any unusual odor. Remove the top access panel and smell the interior of the boiler enclosure. Do not proceed with startup if there is any indication of a gas leak. Use an approved leak detection solution. Repair any leaks at once.

⚠WARNING DO NOT adjust or attempt to measure gas valve outlet pressure. The gas valve is factory set for the correct outlet pressure. This setting is suitable for natural gas and propane, requiring no field adjustment. Attempting to alter or measure the gas valve outlet pressure could result in damage to the valve, causing potential severe personal injury, death, or substantial property damage.

Figure 9-1 *Condensate Trap*

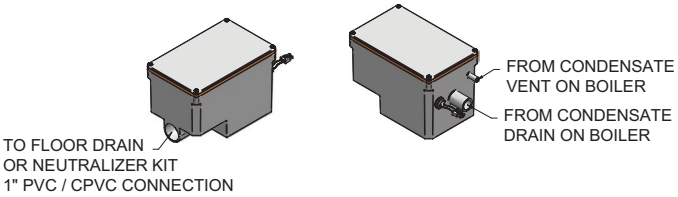

⚠WARNING Propane boilers only – Your propane supplier mixes an odorant with the propane to make its presence detectable. In some instances, the odorant can fade, and the gas may no longer have an odor. Before startup (and periodically thereafter), have the propane supplier verify the correct odorant level in the gas.

Check thermostat circuit(s)

1. Disconnect the two external wires connected to the enable terminals on the connection board.

2. Connect a voltmeter across these two incoming wires. Close each thermostat, zone valve, and relay in the external circuit one at a time and check the voltmeter reading across the incoming wires.

3. There should NEVER be a voltage reading.

4. If a voltage does occur under any condition, check and correct the external wiring. (This is a common problem when using 3-wire zone valves.)

5. Once the external boiler enable wiring is checked and corrected if necessary, reconnect the external thermostat circuit wires to the connection board. Allow the boiler to cycle.

Inspect condensate system

Inspect/check condensate lines and fittings

1. Inspect the condensate drain line, condensate PVC fittings and condensate trap.

9 Start-up *(continued)*

Final checks before starting the boiler

- ❑ Read the Crest Service Manual to familiarize yourself with SMART TOUCH control module operation. Read this manual, page 50 for proper steps to start boiler.
- ❑ Verify the boiler and system are full of water and all system components are correctly set for operation.
- ❑ Verify the preparation procedures of Section 9, pages 46 - 48 have been completed.
- ❑ Verify electrical connections are correct and securely attached.
- ❑ Inspect vent piping and air piping for signs of deterioration from corrosion, physical damage or sagging. Verify air piping and vent piping are intact and correctly installed per this manual.

Start the boiler

1. Read and follow the Operating instructions in FIG. 9-2, page 50.

If boiler does not start correctly

1. Check for loose connections, blown fuse or service switch off?
2. Is external limit control (if used) open? Is boiler water temperature above 200°F (93°C)?
3. Is the boiler receiving a call for heat?
4. Is gas turned on at meter and boiler?
5. Is incoming gas pressure less than 4 inches w.c. (.99 kPa)?
6. Ignition problems are especially noticeable in new LP installations and also in empty tank situations. This can also occur when a utility company shuts off service to an area to provide maintenance to their lines.

If none of the above corrects the problem, refer to the Troubleshooting Section of the Crest Service Manual.

Check system and boiler

❑ Check water piping

1. Check system piping for leaks. If found, shut down the boiler and repair immediately. (See WARNINGS on pages 46 - 48 (startup) regarding failure to repair leaks.)
2. Vent any remaining air from the system using manual vents. Air in the system will interfere with circulation and cause heat distribution problems and noise.

❑ Check vent piping and air piping

1. Check for gastight seal at every connection, seam of air piping, and vent piping.

⚠WARNING Venting system must be sealed gastight to prevent flue gas spillage and carbon monoxide emissions, which will result in severe personal injury or death.

❑ Check gas piping

1. Check around the boiler for gas odor following the procedure on page 37 of this manual (connecting gas supply piping).

⚠WARNING If you discover evidence of any gas leak, shut down the boiler at once. Find the leak source with a bubble test and repair immediately. Do not start the boiler again until corrected. Failure to comply could result in severe personal injury, death, or substantial property damage.

Check flame and combustion

NOTICE For dual fuel models, reference the Crest Dual Fuel Supplemental Manual.

1. Turn the main power off to the boiler by placing the "On/Off" switch in the OFF position.
2. Remove the fitting from the flue collector. **Note:** Combustion measurements will be made at this point.
3. Insert the probe from a combustion analyzer into the hole left by the removal of the fitting.
4. Turn the main power on to the boiler by placing the "On/Off" switch in the ON position.

9 Start-up

Figure 9-2 *Operating Instructions*

FOR YOUR SAFETY READ BEFORE OPERATING

WARNING: If you do not follow these instructions exactly, a fire or explosion may result causing property damage, personal injury, or loss of life.

A. This appliance does not have a pilot. It is equipped with an ignition device which automatically lights the burner. Do not try to light the burner by hand.

B. BEFORE OPERATING smell all around the appliance area for gas. Be sure to smell next to the floor because some gas is heavier than air and will settle on the floor.

WHAT TO DO IF YOU SMELL GAS

- Do not try to light any appliance.
- Do not touch any electric switch; do not use any phone in your building.
- Immediately call your gas supplier from a neighbor's phone. Follow the gas supplier's instructions.
- If you cannot reach your gas supplier, call the fire department.

C. Use only your hand to turn the gas control knob. Never use tools. If the handle will not turn by hand, don't try to repair it, call a qualified service technician. Force or attempted repair may result in a fire or explosion.

D. Do not use this appliance if any part has been under water. Immediately call a qualified service technician to inspect the appliance and to replace any part of the control system and any gas control which has been under water.

OPERATING INSTRUCTIONS

1. **STOP!** Read the safety information above on this label.
2. Set the thermostat to lowest setting.
3. Turn off all electric power to the appliance.
4. This appliance is equipped with an ignition device which automatically lights the burner. Do not try to light the burner by hand.
5. Remove front door.
6. Turn gas shutoff valve counterclockwise to "OFF". Handle will be perpendicular to pipe. Do not force.
7. Wait five (5) minutes to clear out any gas. If you then smell gas, **STOP!** Follow "B" in the safety information above this label. If you don't smell gas, go to next step.
8. Turn gas shutoff valve clockwise to "ON". Handle will be parallel to pipe.
9. Install front door.
10. Turn on all electric power to appliance.
11. Set thermostat to desired setting.
12. If the appliance will not operate, follow the instructions "To Turn Off Gas To Appliance" and call your service technician or gas supplier.

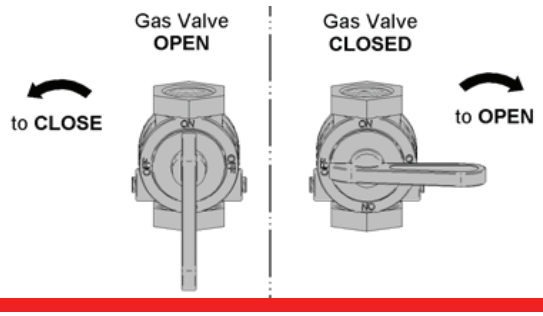

TO TURN OFF GAS TO APPLIANCE

1. Set the thermostat to lowest setting.
2. Turn off all electric power to the appliance if service is to be performed.
3. Remove front door.
4. Turn gas shut off valve counterclockwise to "OFF". Handle will be perpendicular to pipe. Do not force.
5. Install front door.

LBL20053 REV B

9 Start-up *(continued)*

Check flame and combustion *(continued)*

5. Navigate to the Setup Screen from the Home Screen by pressing the SETUP button along the left side of the screen. Enter the installer password.
6. Select the Service Maintenance Screen. The tabs will scroll (up and down) to reveal more options. See the Crest Service Manual for more detailed information.
7. Once the boiler has modulated up to rate, measure the combustion. The values should be in the range listed in Table 9B (this page). CO levels should be less than 200 ppm for a properly installed unit. If the combustion is not within range reference the *Troubleshooting* Section in the Crest Service Manual for possible causes and corrective actions.
8. Once the heater analysis is complete, test the safety shutoff device by turning the manual shutoff valve to the OFF position and ensuring the heater shuts down and registers an alarm. Open the manual shutoff valve and reset the control.
9. Turn the main power off to the boiler and replace the fitting into the flue pipe connection.
10. Ensure the boiler is placed back into normal operation.

Table 9B *Flue Products Chart*

Flue Products	Natural Gas			
Units	751-2001		2501-6001	
Gas Valve	CO_2 (%)	O_2 (%)	CO_2 (%)	O_2 (%)
Valve 1 High	9.2	4.6	9.2	4.6
Valve 1 Low	9.0	4.9	8.5	5.7
Valve 2 High	9.3	4.4	9.5	4.2
Valve 2 Low	8.7	5.5	8.8	5.4
Propane				
Units	751-2001		2501-6001	
Gas Valve	CO_2 (%	O_2 (%)	CO_2 (%	O_2 (%)
Valve 1 High	11.0	4.1	11	4.1
Valve 1 Low	10.0	5.6	9.9	5.7
Valve 2 High	11.1	4.0	11.1	4
Valve 2 Low	10.7	4.6	10.1	5.5
All set points should be within +/- 0.2%				

⚠WARNING You must replace the fitting to prevent flue gas spillage into the room. Failure to comply could result in severe personal injury, death, or substantial property damage.

Figure 9-3 *Service Maintenance Screen*

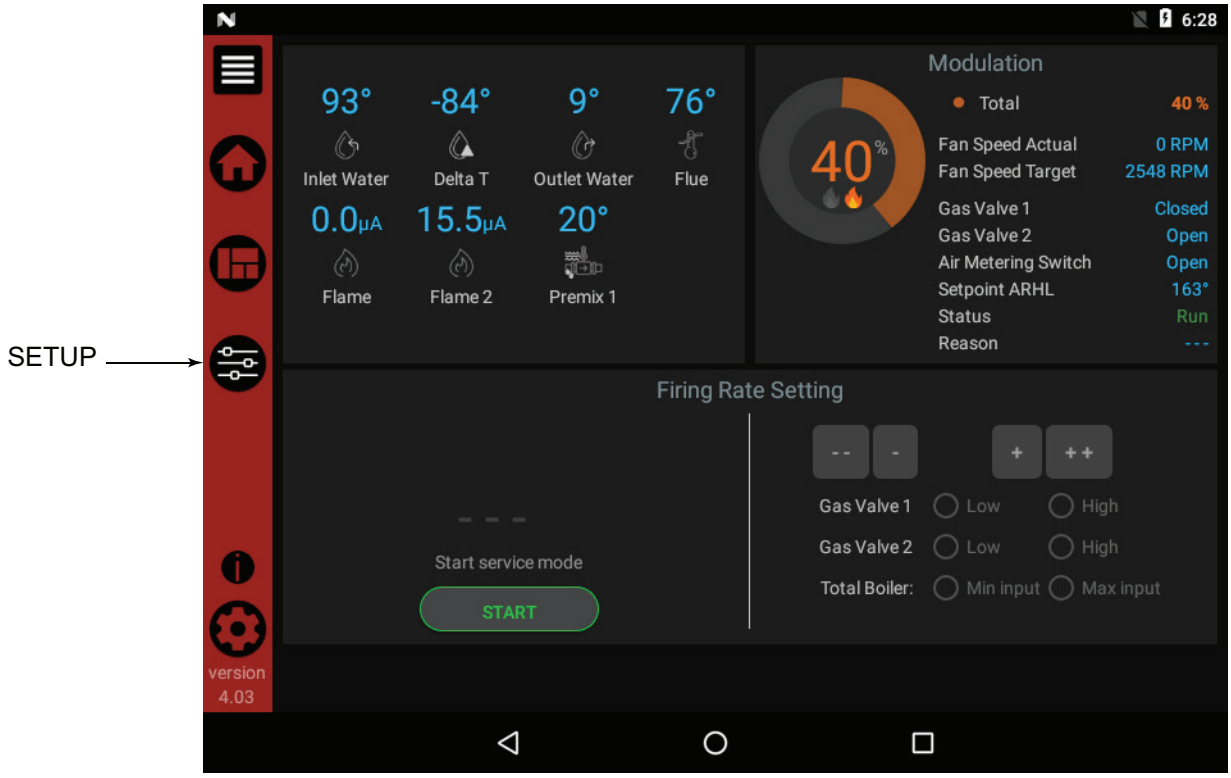

9 Start-up

Set space heating operation

Verify space heat circulator mode

The system pump output can be programmed to never run (OFF), run only when a space heating demand is present (ON), or run continuously except during warm weather shutdown (WWSD). If the boiler is not heating an indirect HW (Hot Water Generator) tank, it also turns on the boiler pump. After the space heating call for heat ends, and the system pump is programmed as ON, the system pump continues to run for a short period of time. If the boiler pump was running, it continues to run for a short period of time as well. These pump delays are factory set to 30 seconds. If different delays are desired, the appropriate parameters in the control must be changed. See the Crest Service Manual for a detailed explanation of this procedure.

Set space heating set point temperature

During normal operation, set point temperatures can be adjusted from the Home Screen by pressing the DETAILS button on the bottom of the screen (see FIG. 9-4).

1. To change a set point, use the set point slider feature or the PLUS (+) and MINUS (-) buttons to adjust the set points as shown in FIG. 9-4.

2. Once the set point has been adjusted to the desired setting, press the Door Menu slider (top left) or the SETUP button.

3. Press the APPLY CHANGES button on the top of the screen.

NOTE: The APPLY CHANGES button must be pressed to complete programming of the controls. Failure to press the APPLY CHANGES button will result in an unprogrammed control. The Door Menu button will become highlighted when there are changes that can be applied.

Figure 9-4 *User Set Point Screen*

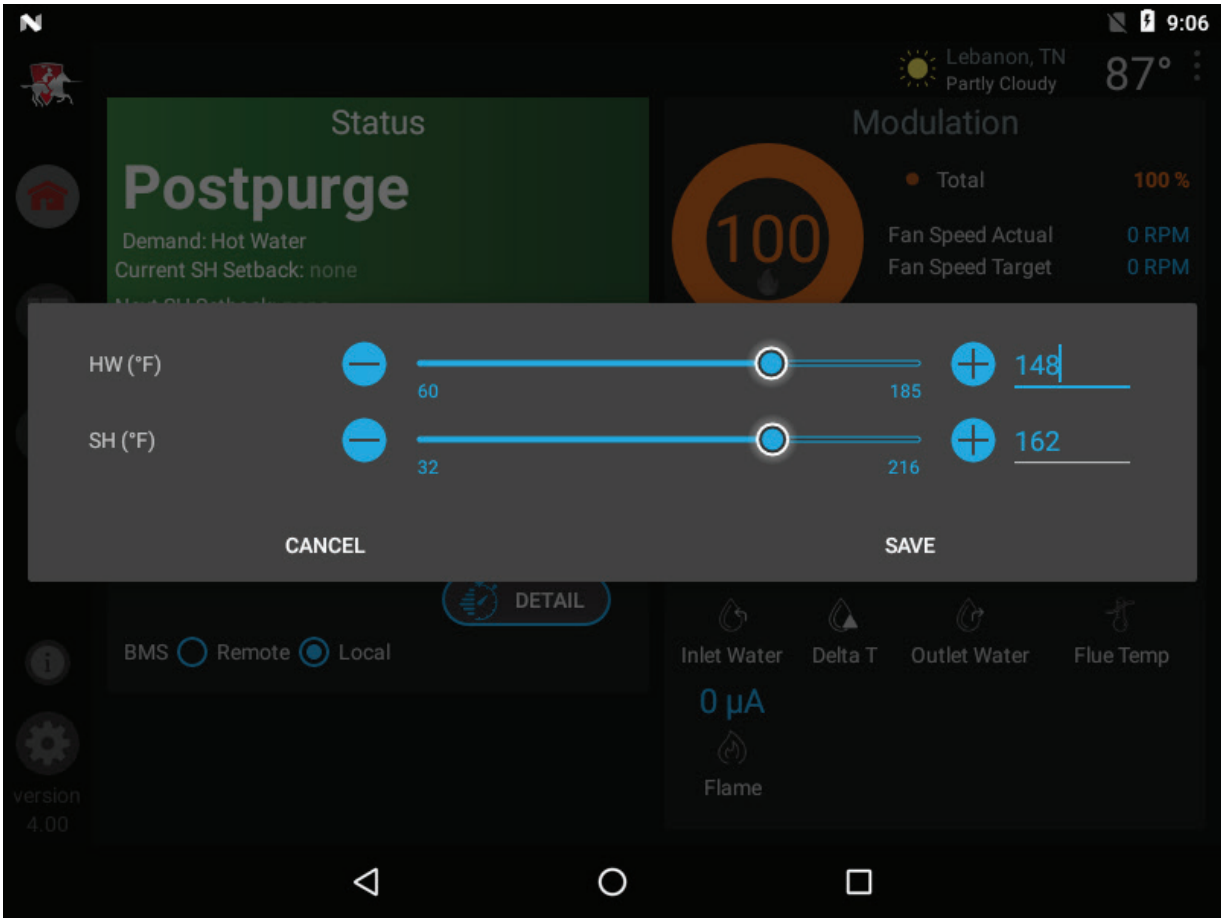

9 Start-up *(continued)*

Set Hot Water Generator (HW) operation

Note: For more detailed instructions, please refer to the Crest Service Manual.

Verify HW mode

There are two (2) modes of operation for HW. In Normal Mode, when a HW demand begins, the control will start the HW pump, turn off the boiler pump (if running), and modulate to bring the outlet temperature to the HW boiler set point. The maximum firing rate may be limited in this mode if desired.

In Zone Mode it is assumed that the indirect HW tank is piped as a zone on the primary loop. When a HW demand begins, the control will turn on the HW pump output, and raise the system temperature set point to the HW boiler set point (if higher). The boiler pump will be turned on. The system pump may be forced on, forced off, or not changed, depending on the System Pump Mode selected (reference the Crest Service Manual for details). In this mode, any low temperature zones (such as radiant heating) may need additional controls to limit the water temperature sent to those zones.

Set HW boiler target temperature

When in the HW Mode, the control will modulate to maintain the boiler outlet temperature or system supply temperature to a set point. This set point is set at the factory to 180°F. If a different set point is desired, the appropriate parameter in the control must be changed. See the Crest Service Manual for a detailed explanation of this procedure.

Set maximum HW fan speed

If the rated input of the indirect tank is less than the maximum output of the boiler, change the maximum HW fan speed setting to limit the boiler output accordingly, see the Crest Service Manual for a detailed explanation of this procedure.

Set clock

The SMART TOUCH control has a built-in clock that it uses for its night setback feature and for logging events. This clock must be set when the boiler is installed, and anytime the boiler has been powered off for more than one day. Use the following procedure to set the clock:

1. Press the SETTINGS button under the Lochinvar logo (see FIG. 9-5).
2. Press the SET button across from the date and time.
3. Proceed to set the date, time, and time zone. **NOTE:** Automatic Time Zone will not work.
4. Temperature units and WiFi may also be set here. These items may be used to automatically sync the time.
5. Press the Home, View, or Back button to exit.

Figure 9-5 *Settings Screen*

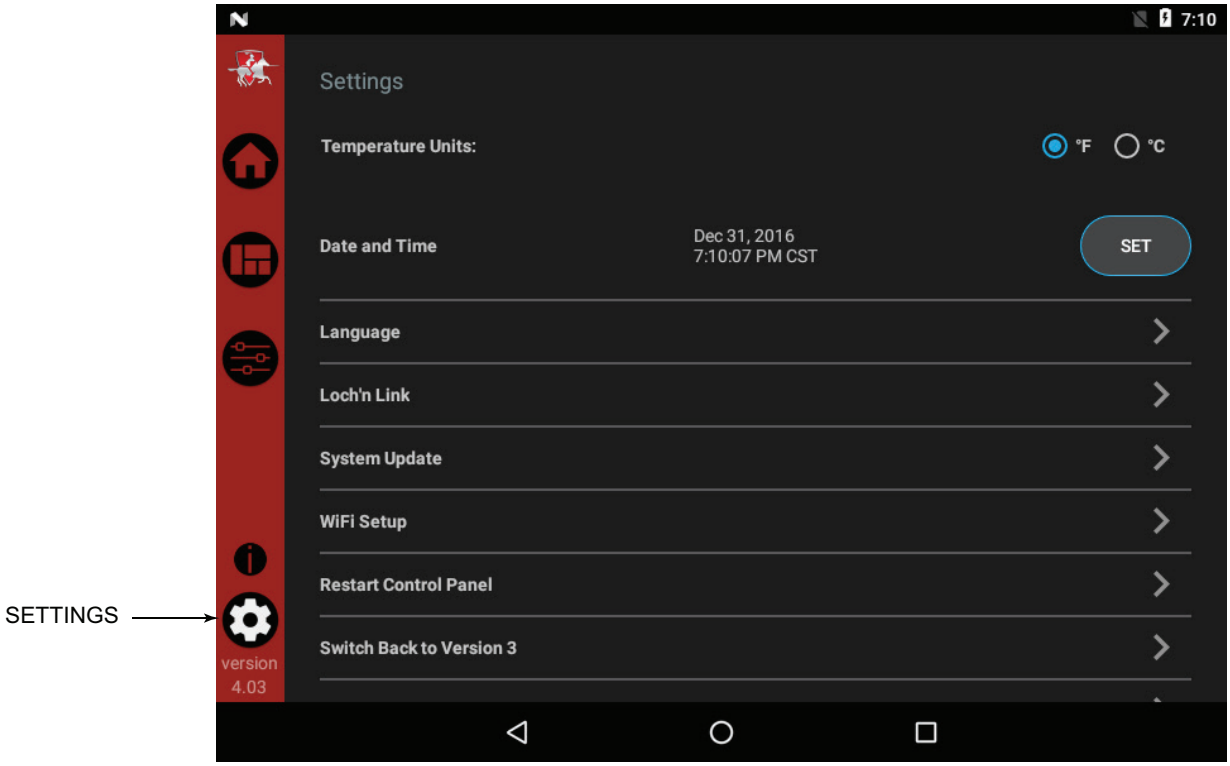

9 Start-up

Configuration of the cascade

Note: For more detailed instructions, please refer to the Crest Service Manual.

When installing a Cascade system, all units must be programmed for Cascade to operate. Access the Cascade Setup options as follows:

1. Press the SETUP button on the left side of the display screen.
2. Enter the installer password.
3. Select the Cascade option as shown in FIG. 9-6.
4. Each unit must have a unique address set. The leader has more options which are described in the Crest Service Manual.
5. Once all the updates are complete, press the Door Menu slider (top left) or the SETUP button.
6. Press the APPLY CHANGES button on the top of the screen.

NOTE: The APPLY CHANGES button must be pressed to complete programming of the controls. Failure to press the APPLY CHANGES button will result in an unprogrammed control. The Door Menu button will become highlighted when there are changes that can be applied.

Figure 9-6 *Cascade Screen*

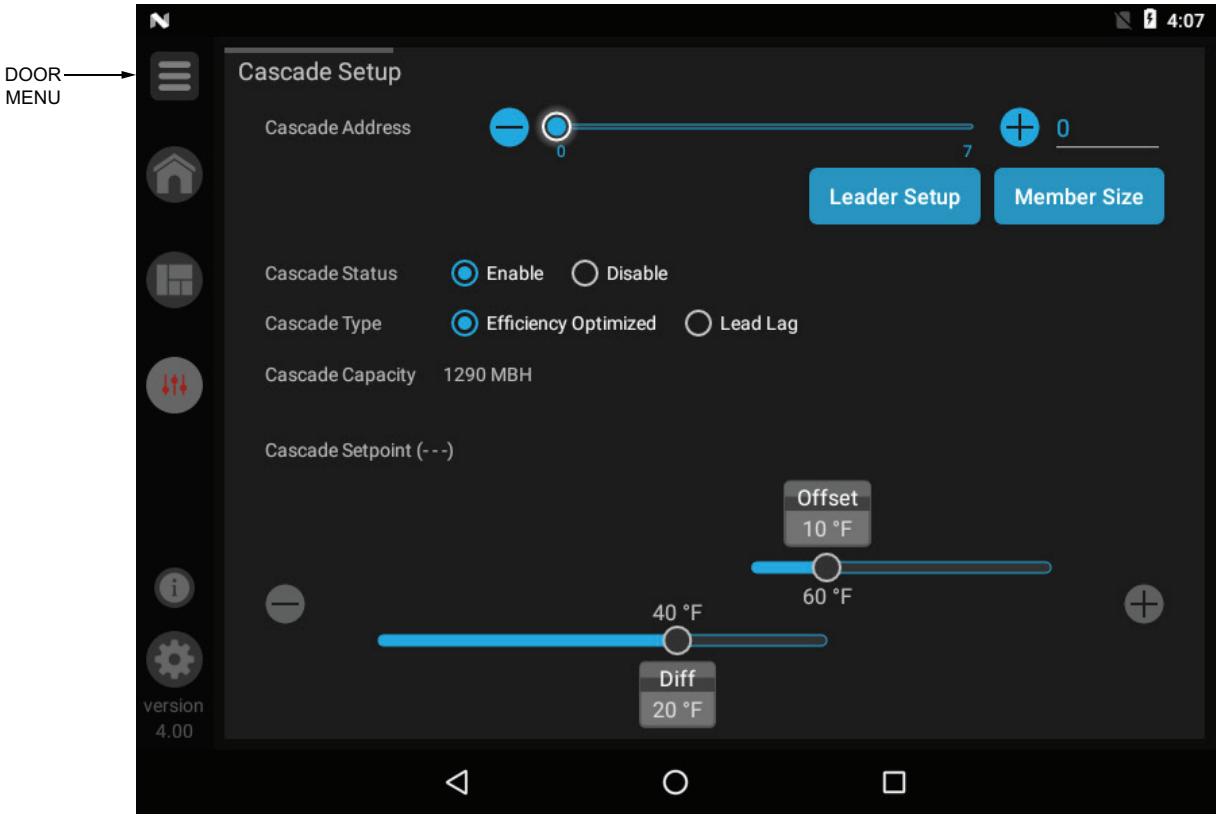

10 Operating information

General

How the boiler operates

The Crest uses an advanced stainless steel heat exchanger and electronic control module that allows fully condensing operation. The blower pulls in air and pushes flue products out of the boiler through the heat exchanger and flue piping. The control module regulates blower speed to control the boiler firing rate. The gas valves sense the amount of air flowing into the boiler and allow only the right amount of gas to flow.

How the control modules operate

The Crest boiler is equipped with a SMART TOUCH control module. The SMART TOUCH control module receives inputs from boiler sensors and external devices. The control module activates and controls the blower and gas valves to regulate heat input and switches the boiler, Hot Water Generator (HW), and system pumps on and off as needed. The user programs the control module to meet system needs by adjusting control parameters. These parameters set operating temperatures and boiler operating modes.

Control inputs and outputs

Enable

This input tells the boiler to provide water for space heating.

Hot Water Generator (HW) tank thermostat

This input tells the boiler to provide water for heating an indirect HW tank.

0 - 10V BMS input (set point or power)

The Crest can be controlled by a Building Management System (BMS) using a 0 - 10 VDC signal. The control can be configured by the installer to use this signal to either control set point or firing rate.

0 - 10V System Pump speed input

When a variable speed system pump is used, and there is a 0 - 10V signal available from the pump speed control, this signal may be connected to the boiler. Doing so will allow the boiler to anticipate changes in the BTU's needed by the system as the system flow changes, and therefore, help the boiler to maintain the desired system temperature. Connect the - input terminal to the COM or - output terminal on the pump speed control, and the + input terminal to the 0 - 10V or + output terminal on the pump speed control. Note that the voltage on these inputs must never go below ground.

HW priority

The SMART TOUCH control allows the connection of a HW thermostat or tank sensor to the low voltage connection board. When a tank sensor is connected, the HW thermostat input is ignored. When a boiler is programmed for HW Normal Mode, the maximum firing rate can be limited to match the input rating of the indirect tank coil.

HW / space heating (SH) cycling

If a HW call for heat is received while a space heating call is in progress, and the HW is in Normal Mode, the control will start the HW pump and shut the boiler pump off. The system pump will remain on. For stand-alone boilers, if the space heating call is still active while the HW call is in operation, the control will wait for 30 minutes (time adjustable by installer) then it will switch back to the space heating demand. There is a timer to switch from space heating to HW and a timer to switch from HW to space heating. The control will switch back and forth until one of the heat demands end. This function does not apply to cascade systems.

Controlling sensor

The control module is programmed to use the outlet sensor as the control sensor by default. If a system supply sensor is connected, the control automatically uses it as the control sensor. The control module may be programmed to use the inlet sensor as the control sensor instead. In this case, the control will use the system return sensor if it is connected.

Anti-cycling

After a space heating demand has been satisfied, the control will delay the next space heating call for a set time period (time is adjustable by the installer). The time delay will be bypassed if the inlet water temperature drops too far during the delay.

Boiler, system, and HW pump control

When a space heating call for heat starts and no HW call is on, the boiler pump is turned on. The system pump will turn on also if it is programmed to do so. If a HW call for heat is on, the boiler pump will wait to turn on until just before the HW pump turns off. After the space heating call for heat ends, the boiler pump will run for an additional period of time.

When a HW call for heat starts, the HW pump is turned on. If a space heating call for heat is on, the boiler pump will turn off a few seconds after the HW pump turns on.

Louver

When the boiler needs to control combustion air louvers, connect a 24 VAC louver relay to the two (2) Louver Relay terminals. Connect the Louver End Switch to the Louver Proving Switch input on the Low Voltage Connection Board.

Temperature control

Modulation

The Crest is capable of modulating its firing rate from a minimum of 4-6% (depending on model) to a maximum of 100%. The firing rate is dictated by the call for heat (i.e., space heating or hot water generation), the heating load, ramp delay (if enabled), and various other temperature limitations.

10 Operating information

Gradient limiting

If during operation of the boiler the outlet water temperature is rising too quickly, the control will reduce the firing rate to its lowest setting.

Outdoor air reset

If an outdoor air sensor is connected, the control module will calculate the set point based on the programmed reset curve. The installer can change the slope of the reset curve by several adjustable parameters. The user can limit the maximum set point for the system using the space heating set point.

Boost function

If outdoor air reset is active, the boost temperature is not 0, a space heating demand has been active continuously for a set period of time (time adjustable by installer) and there has been no HW demands, the control will increase the set point by a fixed number of degrees (adjustable by installer). This process will continue until the space heating demand ends, the set point reaches the programmed set point or a maximum of 20 increases has occurred. Once the system heat demand is satisfied, the set point will revert to the value determined by the reset curve.

Night setback

The controller may be programmed to reduce the space heating set point and/or Hot Water Generator set point for each demand during a certain time each day. A start and stop time for each demand can be programmed for each day of the week. The controller can be programmed to reduce the tank set point as well. A different set of start and stop times can be programmed each day of the week.

Flame current support

To prevent nuisance shutdowns when the boiler is firing at minimum rates, the control will increase the firing rate when the flame signal drops too low.

ModBus / BACnet

The Crest boiler can be connected to and controlled by a Building Automation System through a ModBus or BACnet interface. Connect the A and B wires to the A and B terminals. If connecting another cable (in a daisy chain), connect the shield wire of the first cable to one of the shield terminals, and the shield wire of the second cable to the other shield terminal. If it is desired to ground the cable shield at the heater, connect the shield wire to one of the shield terminals, and install a jumper across the two (2) terminals in connector X5 on the ModBus / BACnet interface board.

0-10V Rate output

A 0-10V signal which indicates the firing rate of the heater is available. This output may be connected to a Building Management System (BMS) to allow it to monitor the actual firing rate. Connect the - terminal to the COM or - terminal on the BMS, and connect the + terminal to the 0 - 10V or + terminal on the BMS.

Ramp Delay

For systems with lower flow, the SMART TOUCH can limit the firing rate (when enabled) when a space heating call for heat starts, or when switching from a DHW call for heat to a space heating call for heat. There are six (6) limits that can be programmed, as well as six (6) time intervals corresponding to each limit. The sixth limit will also limit the firing rate for the rest of the call for heat.

Protection features

Outlet temperature, flue temperature, and temperature rise limiting

The outlet water temperature is monitored by the boiler outlet temperature sensor. When the outlet temperature exceeds 185°F, the unit will reduce the fan speed. If the outlet water temperature exceeds 195°F (90°C) the control will shut the unit down until the minimum off time has expired and the outlet drops 10°F (5.5°C).

The control module monitors the flue temperature by a sensor located in the flue exhaust. If the flue temperature exceeds 215°F (101°C) the control will reduce the maximum fan speed. If the flue temperature exceeds 225°F (107°C) the control will shut the unit down. The unit will restart automatically once the flue temperature drops 10°F (6°C) and the minimum off time has expired.

The control monitors the temperature difference between the inlet and the outlet sensor. If this difference exceeds 70°F (21°C) the control will reduce the fan speed. If the temperature difference exceeds 80°F (27°C) the control will shut the unit down. The unit will restart automatically once the temperature difference has dropped below 50°F (28°C) and the minimum off time has expired.

Freeze protection

DO NOT install the boiler in a room likely to freeze.

The following integral feature of the SMART TOUCH control module provides some protection for the boiler only -- not for the system.

- The SMART TOUCH control module provides freeze-up protection as follows when the boiler water temperature drops below 45°F (7°C):
- Below 45°F (7°C), the boiler and system pumps (if enabled) operate constantly.
- Below 37°F (3°C), the boiler turns on.
- Boiler and pumps turn off if boiler water temperature rises above 43°F (6°C).

⚠ CAUTION This feature of the SMART TOUCH control module does not eliminate the possibility of freezing. The installation must still use recognized design, installation and maintenance practice to prevent freeze potential for the boiler and system.

10 Operating information *(continued)*

Monitor external limits

Connections are provided on the connection board for external limits such as an additional high limit. The SMART TOUCH control will shut off the burner and inhibit relighting whenever any of these external limits open.

Run-time and alarm outputs

The boiler provides dry contacts for indicating when the boiler is running, and when it is unable to operate.

Run-time and cycle counting

The control uses four timers to monitor the total hours of burner operation:

75 - 100% 50 - 75%
25 - 50% <25%

The control uses four (4) ignition counters to monitor the amount of boiler cycles. The first counter counts all ignitions of the control. The second counter counts only ignition attempts that have failed. The third and fourth counters are the same as the first and second respectively, but can be reset by the installer.

Service reminder

The control can be programmed for service reminder notification. This notification will become active when either a set amount of time has expired, or a set amount of running hours or cycles has expired (all adjustable by the installer). The service reminder notification can be reset by the installer. The service company's name and phone number can be programmed to display when service is due.

Error logging

The control will hold in memory the last 10 blocking faults as well as the last 10 lockout faults. The date and time of the occurrence will be recorded as well. Only the 10 most recent occurrences will be held in memory.

Boiler temperature regulation

Operating temperature (target)

The SMART TOUCH control module senses water temperature and regulates boiler firing and firing rate to achieve a target temperature. The target temperature can be set between 32°F (0°C) and 185°F (85°C).

- Target temperature is fixed when the outdoor sensor is not installed.
- Target temperature is calculated as described under "Outdoor Reset Operation" and "Target Temperature Boost" when the outdoor sensor is connected.

High limit operations

The Crest SMART TOUCH control has two (2) integral limits, one auto reset and one manual reset. The Crest also has one auxiliary manual reset high limit. The integral and auxiliary high limits are UL353 certified.

When the outlet temperature exceeds 195°F (90.6°C) (Installer Adjustable Parameter), integral auto reset high limit action occurs. The boiler will shut down until the outlet water cools down and the timer expires.

If the outlet temperature exceeds 200°F (93.3°C) (User Adjustable Dial), auxiliary manual reset high limit action occurs. The boiler will shut down until the outlet water cools down and the boiler is reset through the user interface.

If the outlet temperature exceeds 205°F (93.3°C) (Installer Adjustable Parameter), integral manual reset high limit action occurs. The boiler will shut down until the outlet water cools down and the boiler is reset through the user interface.

Low water cutoff protection

A low water cutoff device with test and reset functionality is provided in the boiler as standard equipment.

Flow sensing device

The SMART TOUCH control module uses temperature sensing of both supply and return temperatures of the heat exchanger. If the flow rate is too low or the outlet temperatures too high, the control module modulates down and will shut the boiler off. This ensures boiler shutdown in the event of low flow conditions.

NOTICE If a mechanical flow switch is required to meet local code requirements the Crest boiler can be equipped with a field supplied outlet flow switch. Please wire to the Louver Proving Switch terminals.

Outdoor reset operation, if used

Target temperature with outdoor reset

This feature improves the system's efficiency as the outdoor temperature warms up.

See the Crest Service Manual to change the settings.

Reset curve

The reset curve looks at outdoor air temperature and adjusts the set point.

10 Operating information

Cascade

When multiple boilers are installed, they can be wired together in a cascade sequence. A maximum of eight boilers can be controlled from a single control. In this application one boiler would be designated as the Leader control and all others would be designated as Member controls.

Once the Leader boiler receives a call for heat from the Enable input, the 0 - 10 VDC input, ModBus or BACnet, the control will determine what the set point will be. If outdoor air reset is desired, connect the outdoor air sensor to the terminals on the Low Voltage Connection Board on the Leader boiler. The set point will be calculated based on the programmed reset curve parameters. See the Crest Service Manual to program the reset curve. If outdoor air reset is not desired, do not connect the outdoor air sensor. A fixed temperature set point can be programmed into the control, or provided through the ModBus or BACnet interface.

If the water temperature at the controlling sensor is less than the set point + the turn-off offset - the off-on differential, the control will initiate a call for heat on the Cascade (see the Crest Service Manual for an explanation of the offset and differential). The Leader will energize the lead boiler on the Cascade. For a new startup this will be the Leader boiler.

The two (2) types of Cascade control are listed below:

Efficiency optimization

Efficiency optimization is chosen when the application is such that overall heating efficiency is most important. The Cascade will fire the boilers in a way that is the most efficient. This allows more boilers to fire at one time, at a lower rate, thus more efficient. This Cascade is **NOT** allowed in a common vent application.

Lead/Lag

The Lead/Lag method is chosen when the application requires firing as few boilers at a time as possible. This method will not bring on another boiler until the current number of boilers cannot meet the demand. This Cascade is also ***required*** when cascading boilers in a common vent application.

The parameters for both types of Cascade are adjustable. Reference the Crest Service Manual for a more detailed description of these adjustments.

Sequence of the cascade

To equalize the run time of all boilers on the Cascade, the firing sequence will automatically be changed at set intervals.

For the first 24 hours after initializing the Cascade, the sequence will be changed every hour. After that the sequence will be changed once every 24 hours.

HW operation with cascade

For normal mode HW operation any boiler(s) in the Cascade can be selected to provide heat for a HW call. Select a boiler to be designated as the HW boiler. Connect the HW thermostat or sensor to the terminals on the Low Voltage Connection Board marked for the corresponding device. When the boiler receives a HW call, the Leader control will take that boiler out of the Cascade sequence. If another boiler is available, the Leader will start it up to take its place.

The HW boiler will adjust its set point to the programmed HW boiler set point and will adjust its firing rate to maintain this. Once the HW call has been satisfied, the Leader control will place that boiler back into the Cascade sequence.

Switching of the boiler between HW operation and SH operation when there is a call for both does not occur in Cascade Mode.

When HW is programmed for Zone Mode, connect the HW thermostat or tank sensor to the Leader boiler. When a HW call is received, the Leader will modulate the entire Cascade to bring the system supply temperature up to the HW boiler set point (if higher).

Night Setback and Ramp Delay operations with cascade

Night Setback and Ramp Delay operation of the boilers within the Cascade are available. Programming will be done through the Leader boiler. Refer to the Crest Service Manual for information regarding Night Setback and Ramp Delay.

10 Operating information *(continued)*

Sequence of operation

Note: This unit is equipped with two (2) gas train systems. Gas Train 1 will fire first. If the demand cannot be met by the first gas train, the second gas train (Gas Train 2) will fire.

1.	Upon a call for heat, the control turns on the appropriate pumps (system and boiler pumps for a space heating call, HW pump for a hot water generator call).
2.	The control confirms that the low water cutoff contacts are closed and energizes the louvers (optional) and damper (optional) relays.
3.	The control confirms that the proof of closure switch (Model FB 6001 only), gas pressure switch, blocked drain switch, limits, louver proving switch (optional) and damper proving switch (optional) contacts close. The proof of closure valve (FB 6001 only) opens and the Pre-Purge cycle begins.
4.	The control confirms the blower is up to the desired speed, and the air pressure switch is closed.
5.	Once the Pre-Purge cycle is complete, the control lowers the blower speed, initiates sparking of the ignition electrode, and opens gas valve 1.
6.	After a short wait, the control stops sparking and checks for the presence of flame current through the flame sense electrode.
7.	If the control does not detect flame current: Models FB0751-2001 - The control will repeat the ignition cycle after the required post purge and pre-purge cycles. Models FB2501-6001 - Loss of flame will result in safety shutdown and lockout, requiring manual reset.
8.	If the control detects flame current, the control will hold the blower speed constant for a few seconds to allow the flame to stabilize, then begin modulating the firing rate in order to maintain the controlling sensor to the desired set point temperature.
9.	If the current call for heat is for space heating and a HW call for heat becomes active, the control will turn on the HW pump relay output, then turn off the boiler pump. It will then modulate the blower speed in order to maintain the outlet temperature to the desired HW outlet set point temperature.
10.	If the boiler is unable to maintain the desired set point using gas valve 1, control will transition to the larger gas valve 2. The blower will modulate to a fixed speed and the air metering valve will start to open. As it opens, gas valve 2 will be turned on and gas valve 1 will be turned off. If the flame should be lost at any time during this process, the control will immediately try to reignite the burner. Once the air metering valve is fully open and the flame is confirmed to be present, the control will hold the fan speed constant for a few seconds in order to allow the flame to stabilize. The fan speed will then modulate as needed to maintain the set point. If the flame is not present when the air metering valve is fully open, the boiler will go through a complete shutdown and restart of the burner. If the heat load should decrease sufficiently, a similar process is used to transition from gas valve 2 to gas valve 1.
11.	Once both the space heating and HW calls for heat are satisfied, the control will turn off the gas valve and begin the Post-Purge cycle. Any pumps that are running will begin their respective Pump Delay cycles.
12.	At the end of the Post-Purge cycle, the louver relay contacts will de-energize.
13.	The control verifies that the blowers stop running and the blower proving switches open.
14.	At the end of the Pump Delay cycle(s), the pump(s) will be turned off.

10 Operating information

SMART TOUCH™ w/Crest CON•X•US Interface (CCI)

The Home Screen displays the available basic system information divided into the following sections: Status, Demand, Modulation, Sensors, and Navigation.

Figure 10-1 *Home Screen*

- The **Status** Section is located on the top left of the screen and displays how the unit is currently running (i.e. Off, Stand-by, Blocking, and Lockout) including: current driving demand, the next Hot Water Setback scheduled, the reason for any blocking or lockout, and a power button.

- The **Demand** Section is located on the bottom left of the screen and displays information about the targets and limits of the current demand being serviced.

- The **Modulation** Section is located on the top right of the screen and displays the target modulation of the unit. This section also includes target and actual fan speeds.

- The **Sensor** Section is located on the bottom right of the screen and displays both factory installed and field installed sensor including: Outdoor Air, Hot Water Temperature, System Supply, System Return, Inlet Water, Delta T, Outlet Water, Flue Temperature, and Flame Current.

- The **Navigation** Section is located down the left side of the screen. There are five (5) sections located below the Lochinvar icon: Home, View, Setup, Information (About), and Settings. The Home Section is the screen shown above. The View Section provides more detailed information including subsections for: History, Cascade, Graphing, and a complete list of current Sensor Values. The Setup Section has several screens to aid in setting up the appliance. The Setup Section includes screens for adjusting: Set Points, Pump Settings, Cascade, BMS, Ramp Delay, and Night Setback. The Information Section provides information about the hardware and software including the current software version of the interface, the version of the boiler control, and the CON·X·US device serial number. The Setting Section enables several interface setup features including: Time Setup, Temperature Unit Select, Loch'n Link, System Update, and WiFi Setup.

11 Maintenance

Maintenance and annual startup

Table 11A *Service and Maintenance Schedules*

Service technician (see the following pages for instructions)	
ANNUAL START-UP	**General:** • Address reported problems, if any • Inspect interior; clean and vacuum if necessary; • Clean condensate trap and fill with fresh water • Check for leaks (water, gas, flue, condensate) • Verify flue and air lines in good condition and sealed tight • Check system water pressure/system piping/expansion tank • Check fill water meter • Test boiler water. When test indicates, clean system water with approved system restorer following manufacturer's information. • Check control settings • Check the ignition and both flame sense electrodes (sand off any deposits; clean and reposition) • Check wiring and connections • Perform start-up checkout and performance verification per Section 9. • Flame inspection (stable, uniform) • Check both flame signals (at least 10 microamps at high fire) • Clean the heat exchanger • Test low water cutoff (reference the Crest Service Manual). **If combustion or performance indicate need:** • Clean heat exchanger • Remove and clean burner using compressed air only • Clean the blower wheels

Owner maintenance (see the Crest User's Information Manual for instructions)	
Daily	• Check boiler area • Check pressure/temperature gauge
Monthly	• Check vent piping • Check air piping • Check air and vent termination screens • Check relief valve • Check condensate drain system • Check Magnetic Separator
Every 6 months	• Test low water cutoff • Reset button (low water cutoff) • Check boiler piping (gas and water) for leaks • Operate relief valve
End of season months	• Shut boiler down (unless boiler used for domestic hot water)

11 Maintenance

⚠WARNING Follow the service and maintenance procedures given throughout this manual and in component literature shipped with the boiler. Failure to perform the service and maintenance could result in damage to the boiler or system. Failure to follow the directions in this manual and component literature could result in severe personal injury, death, or substantial property damage.

⚠WARNING The boiler should be inspected annually only by a qualified service technician. In addition, the maintenance and care of the boiler designated in Table 11A and explained on the following pages must be performed to assure maximum boiler efficiency and reliability. Failure to service and maintain the boiler and system could result in equipment failure.

⚠WARNING Electrical shock hazard – Turn off power to the boiler before any service operation on the boiler except as noted otherwise in this instruction manual. Failure to turn off electrical power could result in electrical shock, causing severe personal injury or death.

Address reported problems

1. Inspect any problems reported by the owner and correct before proceeding.

Inspect boiler area

1. Verify that boiler area is free of any combustible materials, gasoline and other flammable vapors and liquids.
2. Verify that air intake area is free of any of the contaminants listed in Section 1 of this manual. If any of these are present in the boiler intake air vicinity, they must be removed. If they cannot be removed, reinstall the air and vent lines per this manual.

Inspect boiler interior

1. Remove the front access covers and inspect the interior of the boiler.
2. Vacuum any sediment from inside the boiler and components. Remove any obstructions.

Clean condensate trap

1. Inspect the condensate drain line, vent line, condensate PVC fittings, and condensate trap.

Flush condensate trap with water

1. Remove the four (4) screws securing the top cover to the condensate trap and remove the cover (FIG. 11-1).
2. Locate the plastic ball inside the float tube. Verify there is nothing under the ball causing it to not seat properly.
3. Fill with fresh water until the water begins to pour out of the drain.
4. Replace the top cover and the screws removed in Step 1.

Figure 11-1 *Condensate Trap*

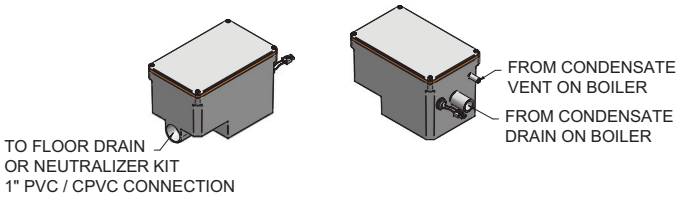

Check all piping for leaks

⚠WARNING Eliminate all system or boiler leaks. Continual fresh makeup water will reduce boiler life. Minerals can build up, reducing heat transfer, overheating heat exchanger, and causing heat exchanger failure. Leaking water may also cause severe property damage.

1. Inspect all water and gas piping and verify to be leak free.
2. Look for signs of leaking lines and correct any problems found.
3. Check gas line using the procedure found in Section 6 - *Gas Connections*.

Flue vent system and air piping

1. Visually inspect the entire flue gas venting system and air piping for blockage, deterioration or leakage. Repair any joints that show signs of leakage. Verify that air inlet pipe is connected and properly sealed.
2. Verify that boiler vent discharge and air intake are clean and free of obstructions.

⚠WARNING Failure to inspect for the above conditions and have them repaired can result in severe personal injury or death.

Check water system

1. Verify all system components are correctly installed and operational.
2. Check the cold fill pressure for the system. Verify it is correct (must be a minimum of 12 psi (82.7 kPa)).
3. Watch the system pressure as the boiler heats up (during testing) to ensure pressure does not rise too high. Excessive pressure rise indicates expansion tank sizing or performance problem.
4. Inspect automatic air vents and air separators. Remove air vent caps and briefly press push valve to flush vent. Replace caps. Make sure vents do not leak. Replace any leaking vents.

11 Maintenance *(continued)*

Check expansion tank

1. Expansion tanks provide space for water to move in and out as the heating system water expands due to temperature increase or contracts as the water cools. Tanks may be open, closed or diaphragm or bladder type. See Section 5 - *Hydronic Piping* for suggested best location of expansion tanks and air eliminators.

Check fill water meter

1. Check fill water meter for water usage. If the amount exceeds 5% of your system volume, you could have a leak. Have the system checked for leaks and fixed by a qualified service technician.

Test boiler water

1. Test boiler water. Reference the Crest Installation and Operation Manual for guidelines. When test indicates, clean system water with approved system restorer following the manufacturer's information.

Check boiler relief valve

1. Inspect the relief valve and lift the lever to verify flow. Before operating any relief valve, ensure that it is piped with its discharge in a safe area to avoid severe scald potential. Read Section 5 - *Hydronic Piping* before proceeding further.

⚠WARNING Safety relief valves should be re-inspected AT LEAST ONCE EVERY THREE YEARS, by a licensed plumbing contractor or authorized inspection agency, to ensure that the product has not been affected by corrosive water conditions and to ensure that the valve and discharge line have not been altered or tampered with illegally. Certain naturally occurring conditions may corrode the valve or its components over time, rendering the valve inoperative. Such conditions are not detectable unless the valve and its components are physically removed and inspected. This inspection must only be conducted by a plumbing contractor or authorized inspection agency – not by the owner. Failure to re-inspect the boiler relief valve as directed could result in unsafe pressure buildup, which can result in severe personal injury, death, or substantial property damage.

2. After following the above warning directions, if the relief valve weeps or will not seat properly, replace the relief valve. Ensure that the reason for relief valve weeping is the valve and not over-pressurization of the system due to expansion tank waterlogging or undersizing.

⚠WARNING Following installation, the valve lever must be operated AT LEAST ONCE A YEAR to ensure that waterways are clear. Certain naturally occurring mineral deposits may adhere to the valve, rendering it inoperative. When manually operating the lever, water will discharge and precautions must be taken to avoid contact with hot water and to avoid water damage. Before operating lever, check to see that a discharge line is connected to this valve directing the flow of hot water from the valve to a proper place of disposal. Otherwise severe personal injury may result. If no water flows, valve is inoperative. Shut down the boiler until a new relief valve has been installed.

Inspect ignition and flame sense electrodes

1. Remove the ignition and both flame sense electrodes from the burner plate.
2. Remove any deposits accumulated on the ignition/flame sense electrodes using sandpaper. If the electrodes cannot be cleaned satisfactorily, replace with new ones.
3. Replace ignition/flame sense electrodes, making sure the gaskets are in good condition and correctly positioned.

Check ignition ground wiring

1. Inspect boiler ground wire from the heat exchanger access cover to ground terminal strip.
2. Verify all wiring is in good condition and securely attached.
3. Check ground continuity of wiring using continuity meter.
4. Replace ground wires if ground continuity is not satisfactory.

Check all boiler wiring

1. Inspect all boiler wiring, making sure wires are in good condition and securely attached.

Check control settings

1. Navigate to the Setup Screen and check all settings. See Section 1 of the Crest Service Manual. Adjust settings if necessary. See Section 1 of the Crest Service Manual for adjustment procedures.
2. Check settings of external limit controls (if any) and adjust if necessary.

Perform start-up and checks

1. Start boiler and perform checks and tests specified in Section 9 - *Start-up*.
2. Verify cold fill pressure is correct and that operating pressure does not go too high.

11 Maintenance

Check burner flame

1. Inspect flame through observation windows.
2. If the flame is unsatisfactory at either high fire or low fire, remove and clean the burner. Clean the burner thoroughly using a vacuum cleaner or compressed air. Do not use compressed air to clean the burner if cleaning is performed inside a building.

   • Shut down the boiler:
   - Follow the "To Turn Off Gas to Appliance" instructions for the boiler in Section 9 - Startup of the Crest Installation and Operation Manual.
   - Do not drain the boiler unless it will be exposed to freezing temperatures. If using freeze prevention fluid in system, do not drain.
3. Allow time for the boiler to cool to room temperature if it has been firing.
4. Remove the top access panel(s) to gain access to the gas/air manifold assembly.
5. Remove the gas/air manifold burner access cover (FIG. 11-2).
6. Remove the nuts/washers holding the burner to the gas/air manifold assembly.
7. Remove the burner from the gas/air manifold assembly.

NOTICE The burner gasket, burner, burner baffle, and gas/air manifold access cover can only be installed in one orientation. All of these parts will have to be re-installed correctly. To ensure all of these parts are re-installed correctly, align the logo on top of the gas/air manifold cover with the logo on the gas/air manifold as shown in FIG. 11-2. Be certain to pay close attention to the bolt pattern when re-installing the above parts.

8. When replacing the burner, ensure gaskets are in good condition and positioned correctly (FIG. 11-2).
9. When securing the burner and manifold, be sure to tighten the nuts as follows:
   a. Tighten the nuts in a star pattern sequence.
   b. **0751-2001 Models:** Tighten the 1/4" nuts, securing burner to the cast manifold to a torque of 8 ft.-lbs.

   2501-6001 Models: Tighten the 5/16" nuts, securing burner to the cast manifold to a torque of 12 ft.-lbs.
10. Re-install the gas/air manifold burner access cover. Tighten 3/8" nuts to 8 ft.-lbs. using the star pattern sequence.
11. After firing the unit, re-tighten the nuts to the torque specifications.

⚠WARNING Failure to follow the torquing specifications listed in this manual could result in severe personal injury or death.

***Figure 11-2** Burner Assembly*

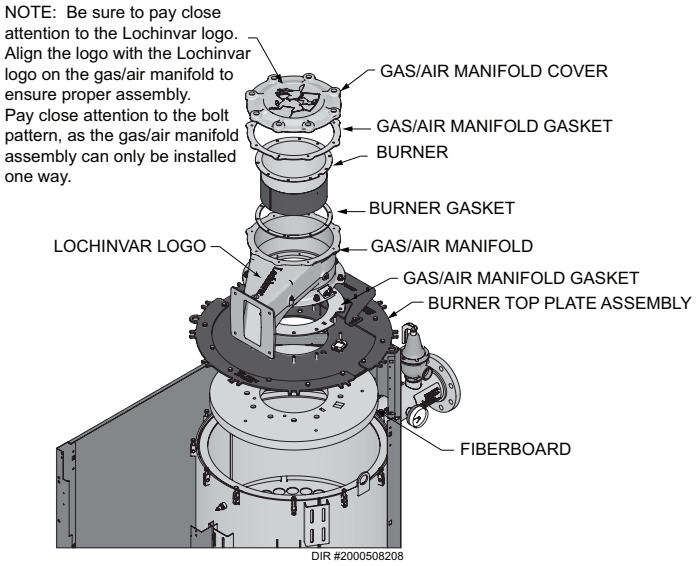

Check flame signal

1. At high fire of each combustion system, the flame signal shown on the display should be at least 10 microamps.
2. A lower flame signal may indicate a fouled or damaged flame sense electrode. If cleaning the flame sense electrodes does not improve, ground wiring is in good condition, and ground continuity is satisfactory, replace the flame sense electrode.
3. See Section 3 - *Troubleshooting* in the Crest Service Manual for other procedures to deal with low flame signal.

11 Maintenance *(continued)*

Review with owner

1. Review the Crest User's Information Manual with the owner.
2. Emphasize the need to perform the maintenance schedule specified in the Crest User's Information Manual (and in this manual as well).
3. Remind the owner of the need to call a licensed contractor should the boiler or system exhibit any unusual behavior.
4. Remind the owner to follow the proper shutdown procedure and to schedule an annual start-up at the beginning of the next heating season.

Cleaning boiler heat exchanger

1. Shut down boiler:
   - Follow the "To Turn Off Gas to Appliance" instructions for the boiler in Section 9 - Startup.
   - Do not drain the boiler unless it will be exposed to freezing temperatures. If using freeze prevention fluid in system, do not drain.
2. Allow time for the boiler to cool to room temperature if it has been firing.
3. Remove the top access panel to remove the gas/air manifold assembly.
4. Remove the nuts securing the burner to the burner mounting plate. Remove the burner (reference FIG. 11-2 and follow the steps in *Check Burner Flame* on page 64).
5. Remove the nuts securing the burner mounting plate from the heat exchanger and set aside. Remove the entire burner mounting plate assembly.

⚠WARNING The boiler contains ceramic fiber materials. Use care when handling these materials per instructions on this page. Failure to comply could result in severe personal injury.

6. Use a vacuum cleaner to remove any accumulation on the tube sheet surfaces. Do not use any solvent.
7. Brush the heat exchanger (tube sheet, combustion chamber walls, and tube entry) while dry using a nylon bristle brush. **Caution:** DO NOT use a metal brush. Re-vacuum the heat exchanger.
8. Finish cleaning using a clean cloth dampened with warm water.
9. Temporarily remove the condensate drain line from the condensate trap and route directly to a drain.
10. Rinse out debris with a low pressure water supply. The water will drain through the condensate connection.
11. Allow the heat exchanger to thoroughly dry.
12. Reconnect the condensate drain line to the condensate trap.
13. Close isolation valves on piping to isolate boiler from system. Attach a hose to the boiler drain and flush boiler thoroughly with clean water by using purging valves to allow water to flow through the water makeup line to the boiler.
14. When securing the burner, be sure to tighten the nuts, but DO NOT over-tighten. Tighten the nuts to a torque setting of no more than 8 ft.-lbs for 0751-2001 models and 15 ft.-lbs for 2501-6001 models. When securing the burner mounting plate be sure to tighten the nuts, but DO NOT over-tighten. Tighten the nuts to a torque setting of no more than 15 ft.-lbs for 0751-2001 models and 40 ft.-lbs for 2501-6001 models.
15. Replace the burner mounting plate assembly and gas/air manifold assembly. Ensure gaskets are in good condition and positioned properly. Restore boiler to operation.
16. Perform start-up and check-out procedures in the Check Flame and Combustion - Section 9 - Startup on pages 49 and 51 of this manual.

Handling ceramic fiber materials

REMOVAL OF COMBUSTION CHAMBER LINING

⚠WARNING The combustion chamber insulation in this appliance contains ceramic fiber material. Ceramic fibers can be converted to cristobalite in very high temperature applications. The International Agency for Research on Cancer (IARC) has concluded, "Crystalline silica in the form of quartz or cristobalite from occupational sources is carcinogenic to humans (Group 1)." Normal operating temperatures in this appliance are below the level to convert ceramic fibers to cristobalite. Abnormal operating conditions would have to be created to convert the ceramic fibers in this appliance to cristobalite.

The ceramic fiber material used in this appliance is an irritant; when handling or replacing the ceramic materials it is advisable that the installer follow these safety guidelines.

- Avoid breathing dust and contact with skin and eyes.
  - Use NIOSH certified dust respirator (N95). This type of respirator is based on the OSHA requirements for cristobalite at the time this document was written. Other types of respirators may be needed depending on the job site conditions. Current NIOSH recommendations can be found on the NIOSH website at http://www.cdc.gov/niosh/homepage.html. NIOSH approved respirators, manufacturers, and phone numbers are also listed on this website.
  - Wear long-sleeved, loose fitting clothing, gloves, and eye protection.
- Apply enough water to the combustion chamber lining to prevent airborne dust.
- Remove the combustion chamber lining from the boiler and place it in a plastic bag for disposal.
- Wash potentially contaminated clothes separately from other clothing. Rinse clothes washer thoroughly.

NIOSH stated First Aid.

- Eye: Irrigate immediately.
- Breathing: Fresh air.

12 Diagrams

Figure 12-1 *Ladder Diagram_751 - 2001 Models*

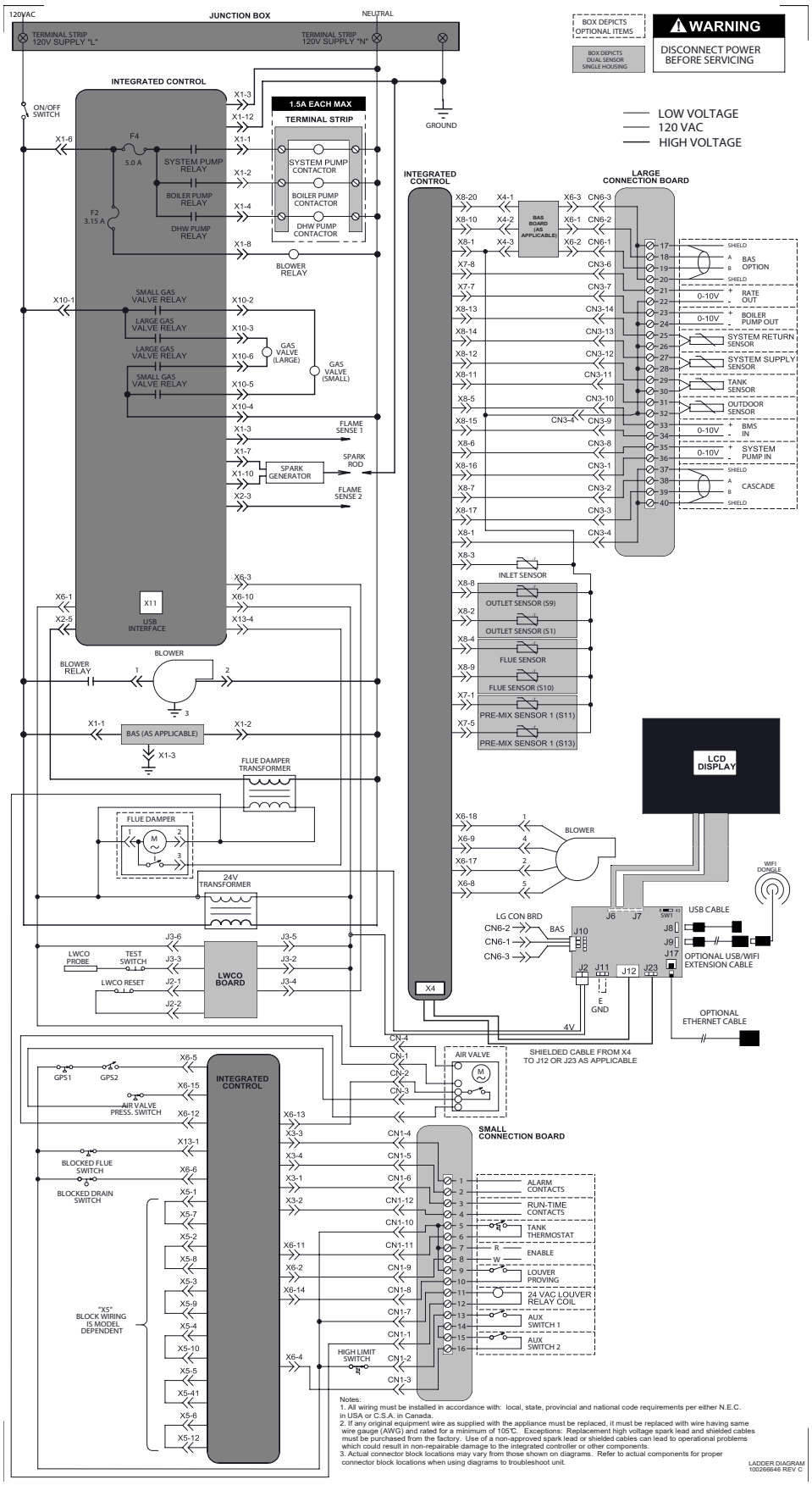

12 Diagrams *(continued)*

Figure 12-2 *Wiring Diagram_751 - 2001 Models*

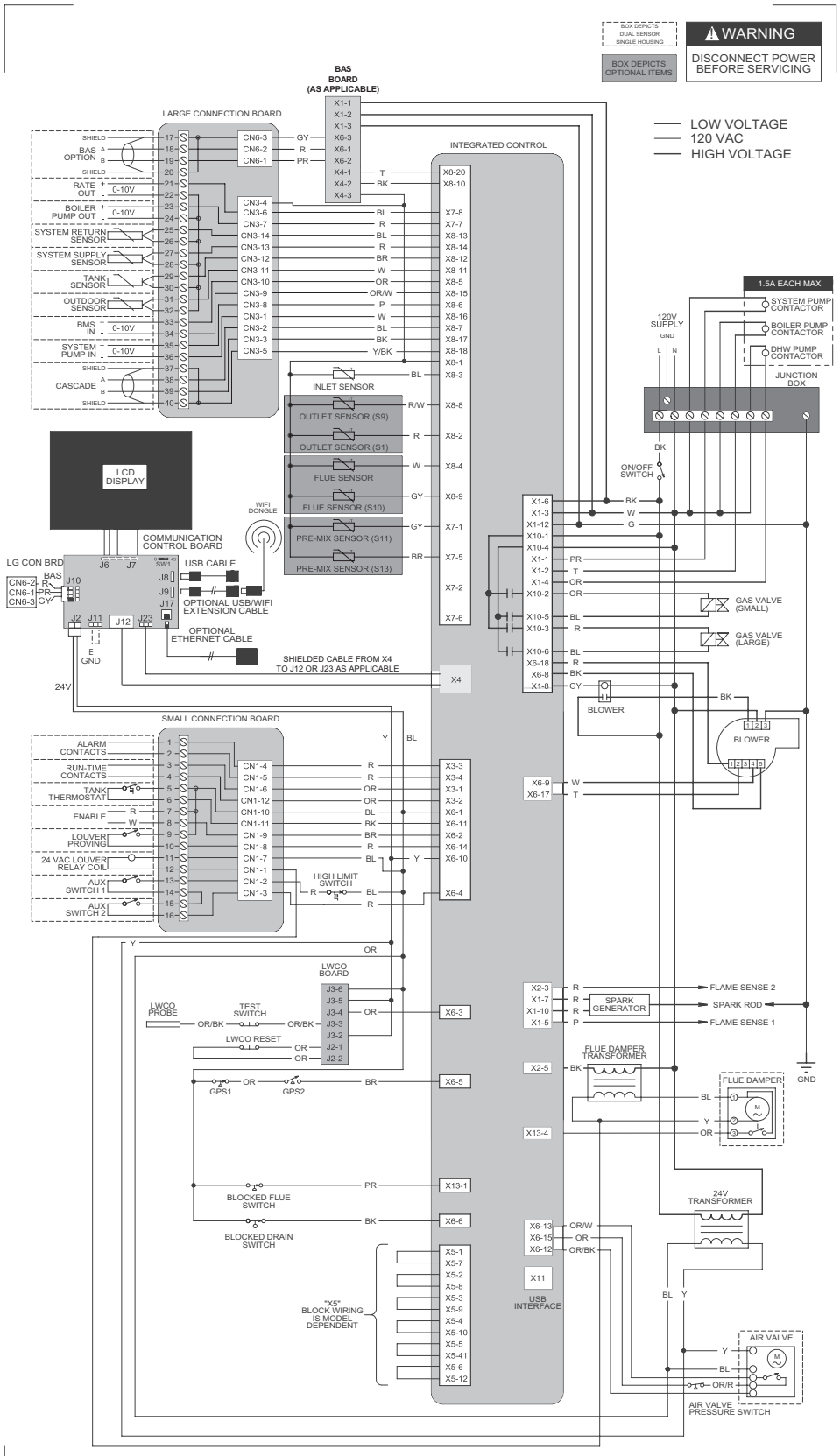

Notes:
1. All wiring must be installed in accordance with: local, state, provincial and national code requirements per either N.E.C. in USA or C.S.A. in Canada.
2. If any original equipment wire as supplied with the appliance must be replaced, it must be replaced with wire having same wire gauge (AWG) and rated for a minimum of 105°C. Exceptions: Replacement high vo ltage spark lead and shielded cables must be purchased from the factory. Use of a non-approved spark lead or shielded cables can lead to operational problems which could result in non-repairable damage to the integrated controller or other components.
3. Actual connector block locations may vary from those shown on diagrams. Refer to actual components for proper connector block locations when using diagrams to troubleshoot unit.

12 Diagrams

Figure 12-3 *Ladder Diagram_2501 - 3501 Models*

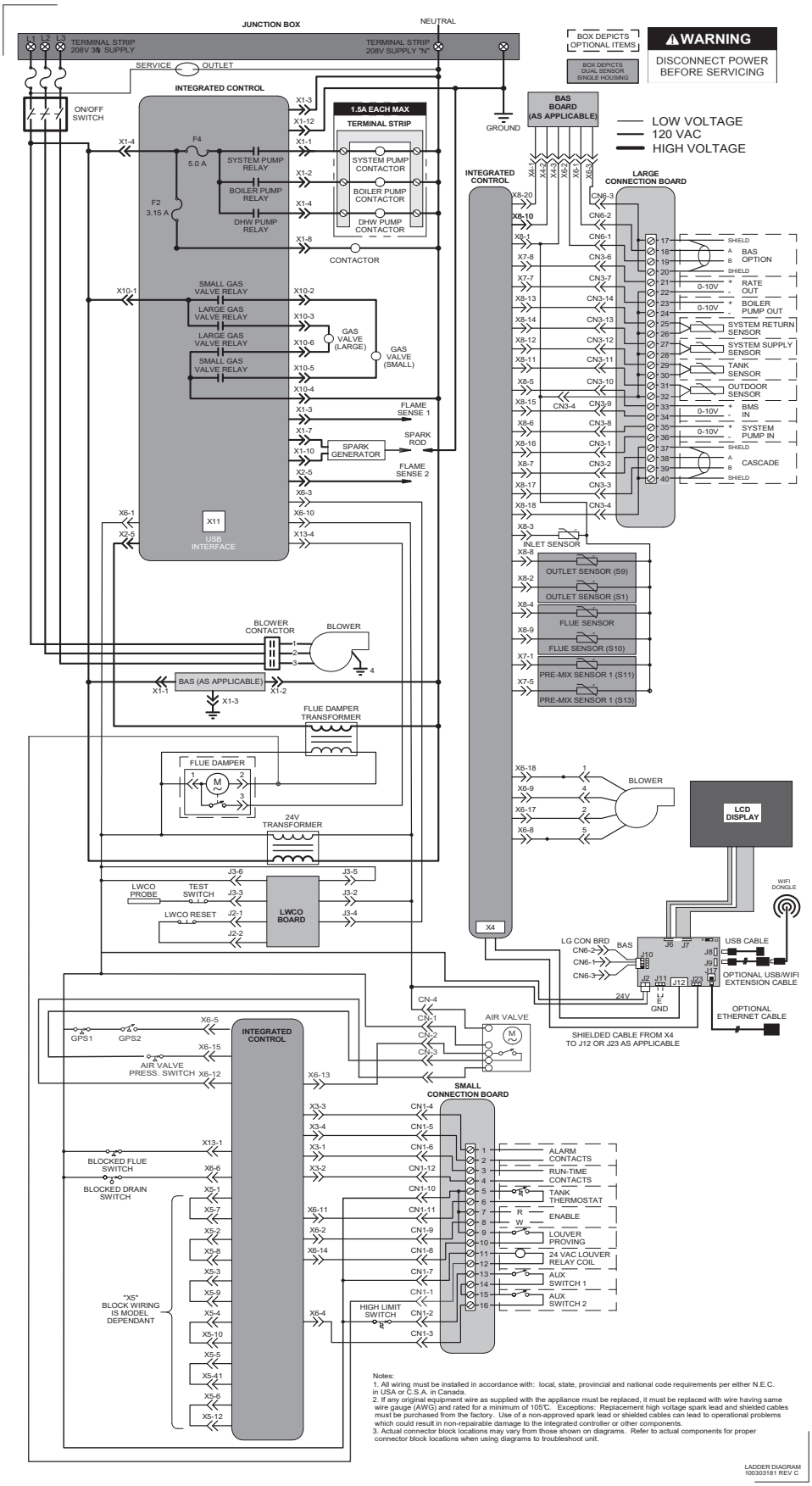

12 Diagrams *(continued)*

Figure 12-4 *Wiring Diagram_2501 - 3501 Models*

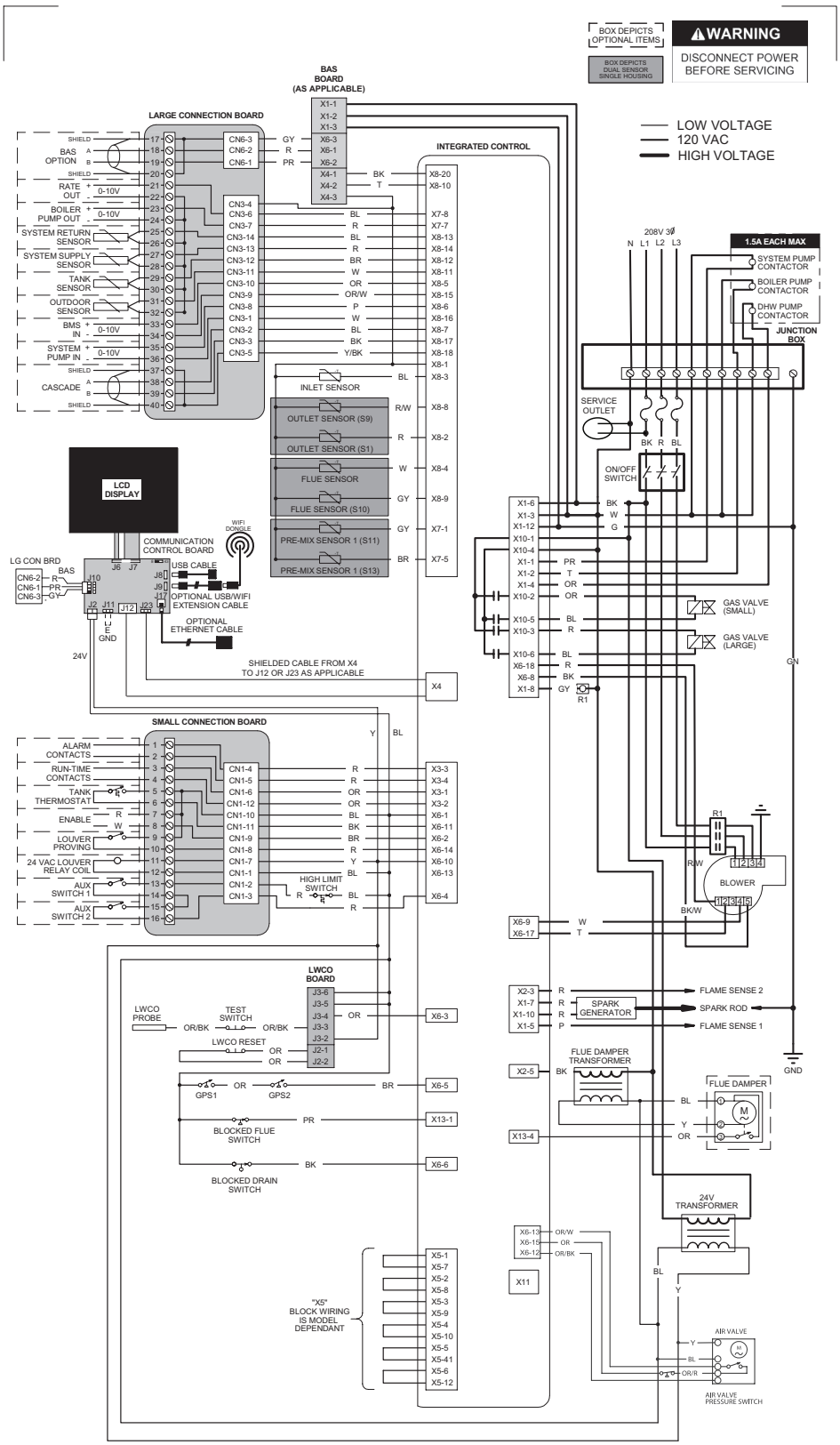

Notes:
1. All wiring must be installed in accordance with: local, state, provincial and national code requirements per either N.E.C. in USA or C.S.A. in Canada.
2. If any original equipment wire as supplied with the appliance must be replaced, it must be replaced with wire having same wire gauge (AWG) and rated for a minimum of 105°C. Exceptions: Replacement high vo ltage spark lead and shielded cables must be purchased from the factory. Use of a non-approved spark lead or shielded cables can lead to operational problems which could result in non-repairable damage to the integrated controller or other components.
3. Actual connector block locations may vary from those shown on diagrams. Refer to actual components for proper connector block locations when using diagrams to troubleshoot unit.

WIRING DIAGRAM 100303303 REV B

12 Diagrams

Figure 12-5 *Ladder Diagram_4001 - 5001 Models*

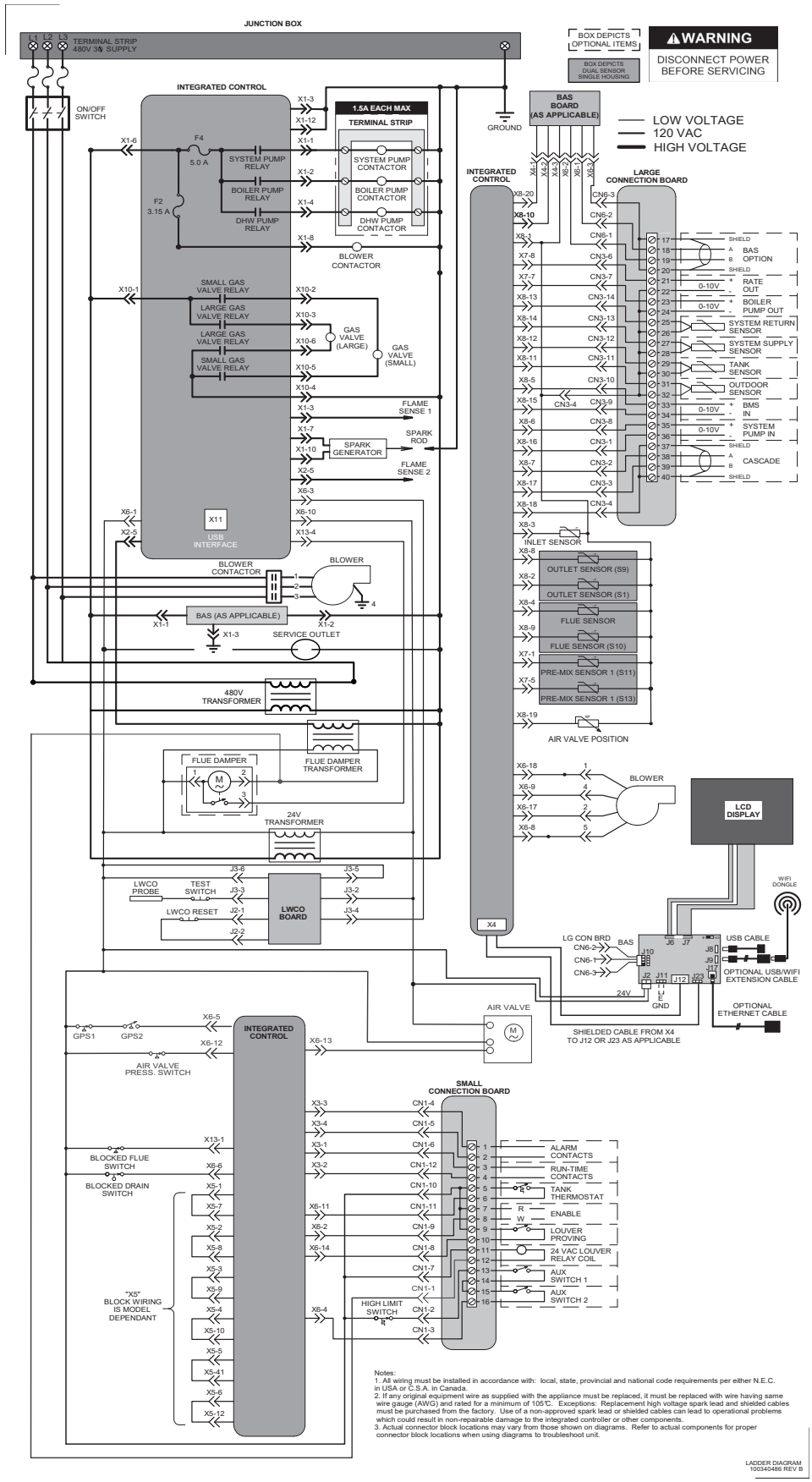

12 Diagrams *(continued)*

Figure 12-6 *Wiring Diagram_4001 - 5001 Models*

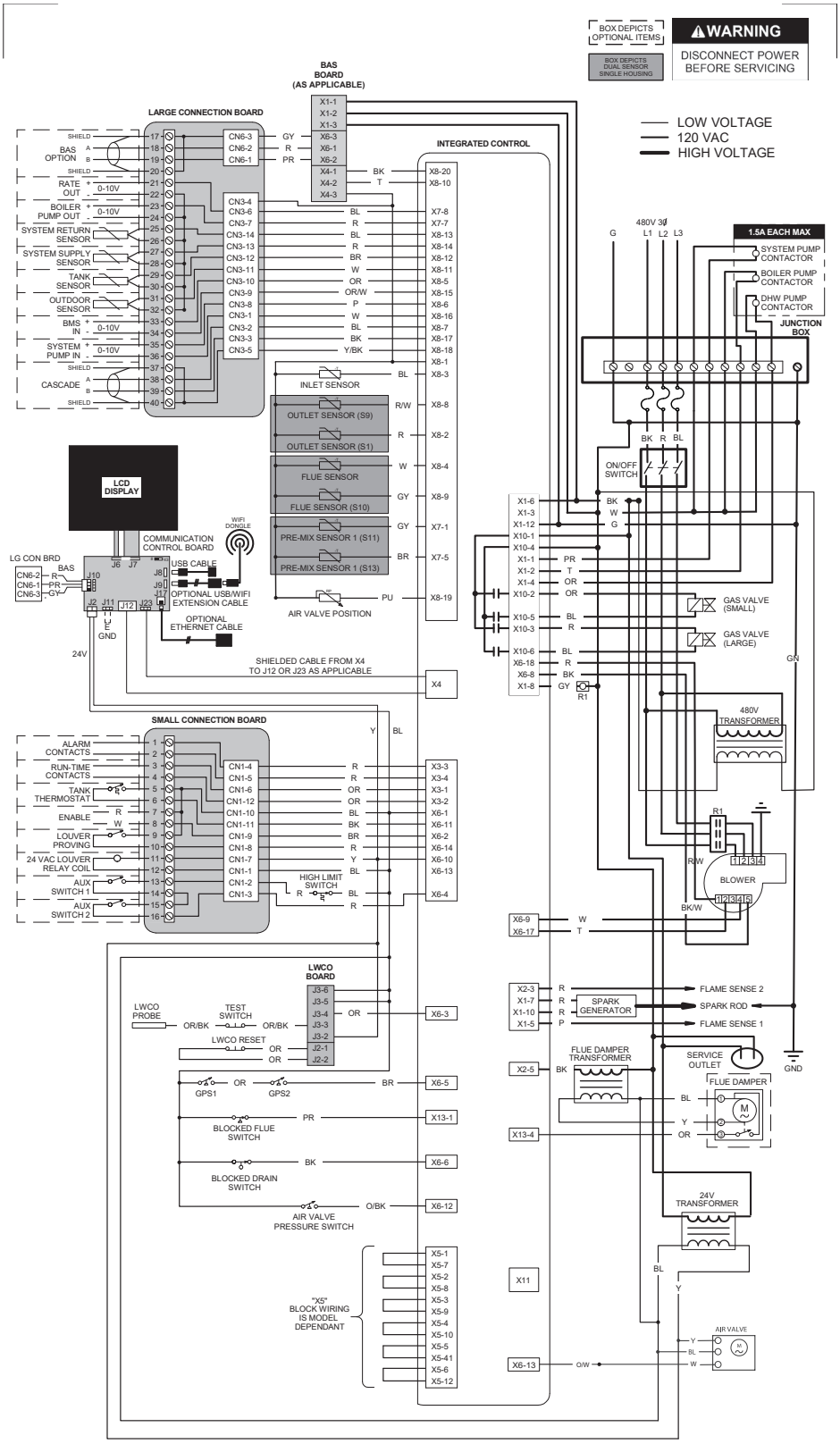

Notes:
1. All wiring must be installed in accordance with: local, state, provincial and national code requirements per either N.E.C. in USA or C.S.A. in Canada.
2. If any original equipment wire as supplied with the appliance must be replaced, it must be replaced with wire having same wire gauge (AWG) and rated for a minimum of 105°C. Exceptions: Replacement high vo ltage spark lead and shielded cables must be purchased from the factory. Use of a non-approved spark lead or shielded cables can lead to operational problems which could result in non-repairable damage to the integrated controller or other components.
3. Actual connector block locations may vary from those shown on diagrams. Refer to actual components for proper connector block locations when using diagrams to troubleshoot unit.

WIRING DIAGRAM
100340388 REV A

12 Diagrams *(continued)*

***Figure 12-7** Ladder Diagram_6001 Model*

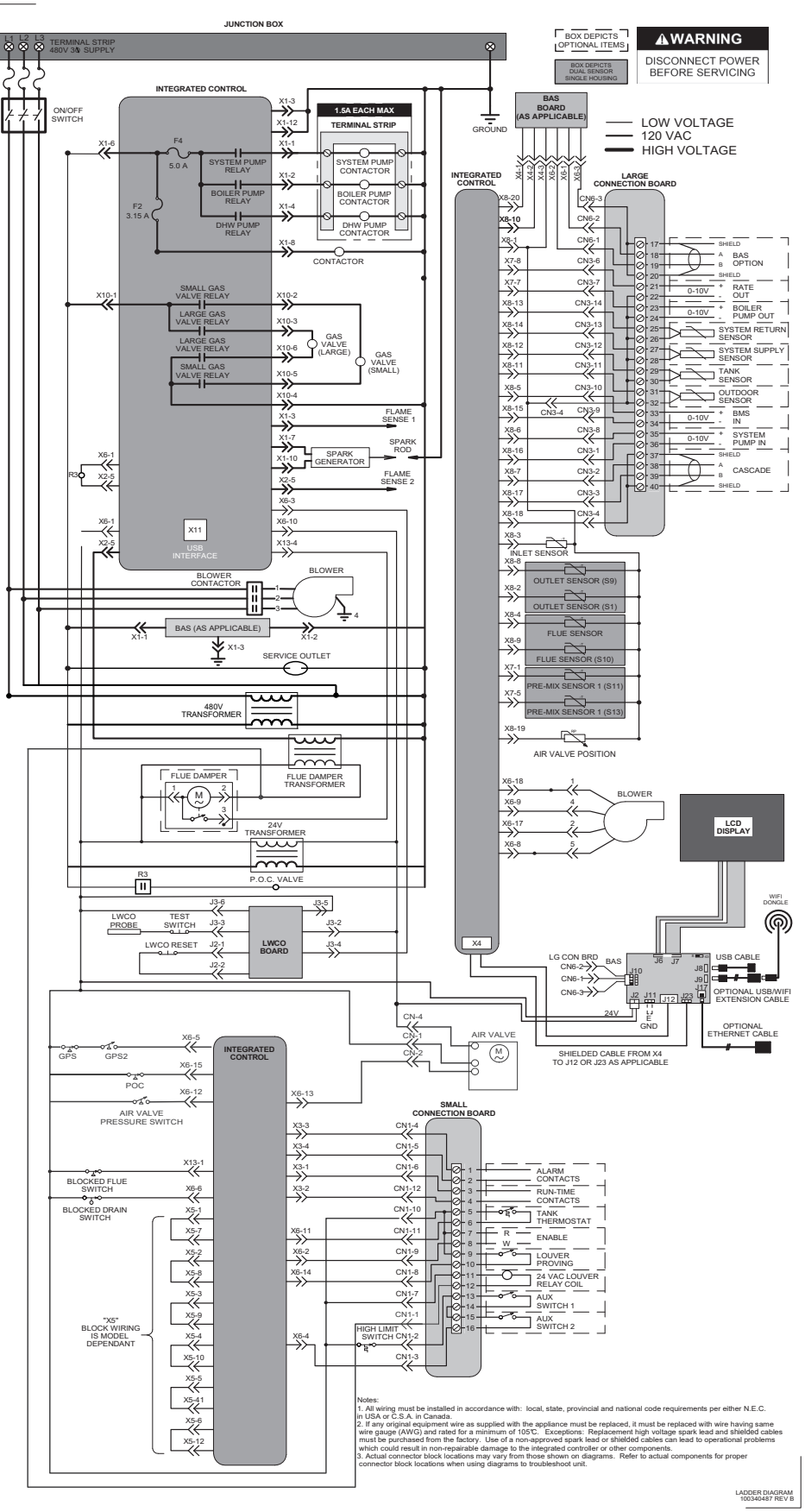

12 Diagrams

Figure 12-8 *Wiring Diagram_6001 Model*

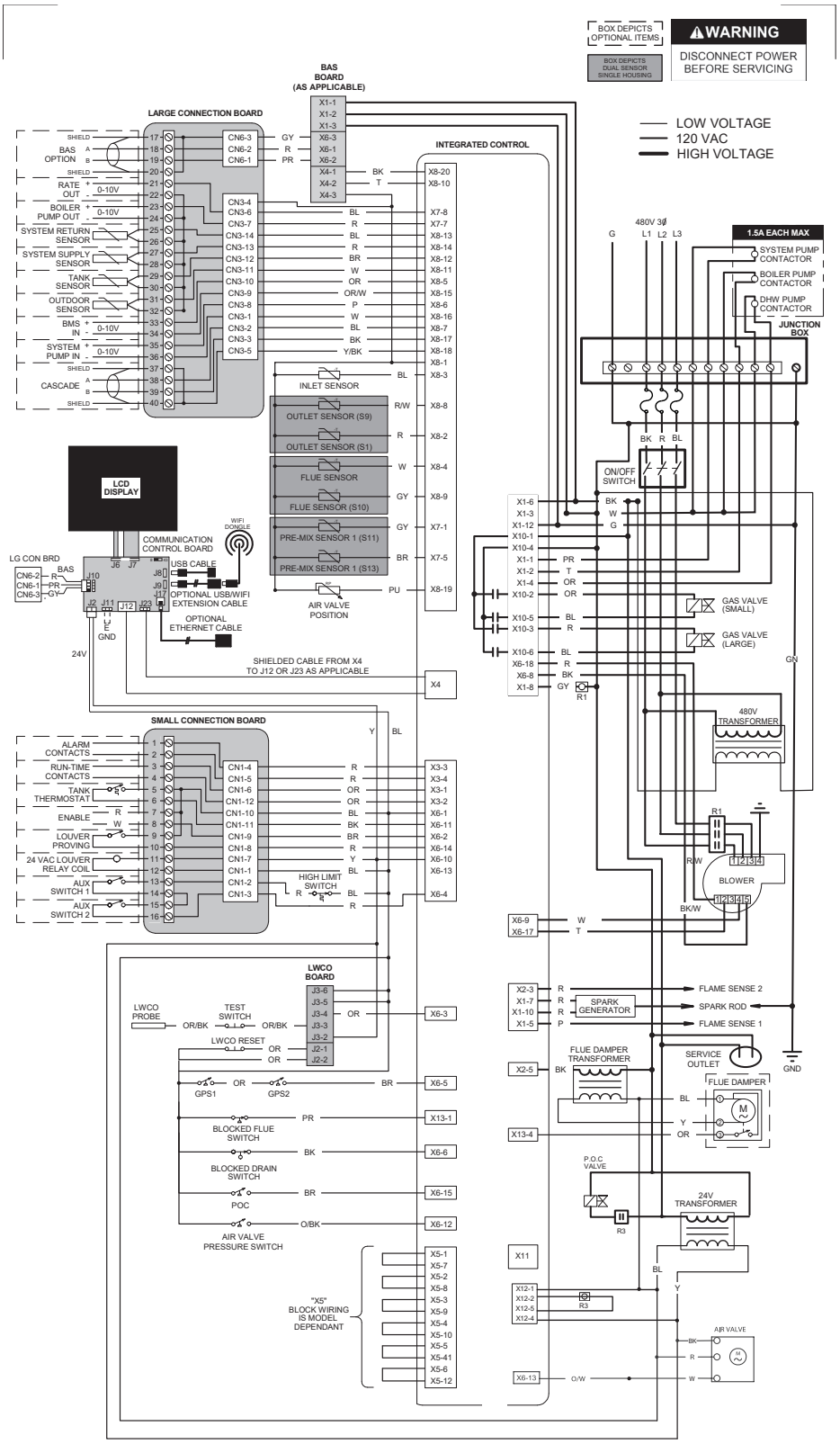

Notes:
1. All wiring must be installed in accordance with: local, state, provincial and national code requirements per either N.E.C. in USA or C.S.A. in Canada.
2. If any original equipment wire as supplied with the appliance must be replaced, it must be replaced with wire having same wire gauge (AWG) and rated for a minimum of 105℃. Exceptions: Replacement high vo ltage spark lead and shielded cables must be purchased from the factory. Use of a non-approved spark lead or shielded cables can lead to operational problems which could result in non-repairable damage to the integrated controller or other components.
3. Actual connector block locations may vary from those shown on diagrams. Refer to actual components for proper connector block locations when using diagrams to troubleshoot unit.

WIRING DIAGRAM 100340502 REV A

Notes

Revision Notes: *Revision A (ECO #C17106) initial release.*

Revision B (ECO C17419) reflects the addition of the large Crest models (1501 - 2001).

Revision C (Change #500000695) reflects the addition of ICC venting options on page 17 (R06799), add PVC to SS adapter and 6" starter piece on page 20 (R08066), along with edits made to the Gas Connections Section, and the addition of the California contaminant warning on page 3 (R07228).

Revision D (Change #500000938) reflects the removal of the balancing valves notice on page 34.

Revision E (Change #500001029) reflects the addition of the Crest CON•X•US Interface, along with the addition of the re-spark ignition option.

Revision F (PCP# 3000002544 / CN# 500002701) reflects an update to step 10 in Sequence of Operation on page 57.

Revision G (PCP# 3000001665 / CN# 500001821) reflects the addition of Step 4 under the Common Venting section on page 19. SAP part numbers have been updated.

Revision H (PCP# 3000003037 / CN# 500003264) reflects an update to Figures 5-4 & 5-5 on pages 33 & 34.

Revision J (PCP# 3000005648 / CN# 500006460) reflects an update to Figures 3-3 and 3-4 on page 23 and Figure 4-5 on page 27.

Revision K (PCP# 3000004438 / CN# 500005574) reflects an update to the flue temperatures on page 54.

Revision L (PCP# 3000007531 / CN# 500007598) reflects changes made to water chemistry information on pages 3, 7, 17, 21, 28-34, 44-45, and 59.

Revision M (PCP# 3000006133 / CN# 500007549) reflects the addition of a PVC-DWV vent fitting in Table 2E on page 20.

Revision N (PCP# 3000009267 / CN# 500009031) reflects an update to the pH Level range on page 44.

Revision P (PCP# 3000009150 / CN# 500008822) reflects edits made to the vent terminations on pages 23 and 27 along with the removal of 48" MAX termination references on pages 24, 25 and 27.

Revision R (PCP #3000010423 / CN #500010150) reflects an update to the neutralizer information on page 43.

Revision T (PCP #3000021559 / CN #500011827) reflects the addition of the 6" vent option along with changes made to the Btu inputs on page 6.

Revision U (PCP# 3000025102 / CN# 500014948) reflects the addition of Models 2501 - 6001.

Revision V (PCP #3000027116 / CN #500016865) reflects the addition of the 110 and 111 series.

Revision W (PCP #3000028279 / CN #500017755) reflects an update to the user interface screens, wiring diagrams, and ladder diagrams.

Revision X (PCP #3000028854 / CN #500018329) reflects an update to Figure 5-4.

Revision Y (PCP #3000029921 / CN #500019205) reflects an update to the data in Figures 5-1A and 5-1B along with Table 5A on pages 30 and 31.

Revision AA (PCP #3000031194 / CN #500020655) reflects an update to Tables 2B, 2C, 2G, and FIG. 2-2. This also includes the addition of Table 2F.

Revision AB (PCP #3000033465 / CN #500022172) reflects the addition of the neutral wiring reference on page 41 along with the addition of the combustion measurement port on pages 4 and 5.

Revision AC (PCP #3000035711 / CN #500024133) reflects an update to the Ratings Table and Table 6A.

Revision AD (PCP #3000036331 / CN #500024646) reflects an update from 7" to 8" pipe in the hydronic piping charts.

Revision AE (PCP #3000037348 / CN #500025601) reflects an update to the ICC part numbers in Table 2A-2.

Revision AF (PCP #3000038943 / CN #500027005) reflects an update to the common header tables on pages 34 and 36.

Revision AG (PCP #3000040404 / CN #500028531) reflects an update to the propane minimum gas pressure.

Revision AH (PCP #3000042364 / CN #500030203) reflects an update to the wiring and ladder diagrams, line voltage field wiring connections image on page 41 and high altitude changes.

Revision AJ (PCP #3000047882 / CN #500035724) reflects an update to the Z-Flex adapters listed on General Venting Table 2A-2 on page 17.

Revision AK (PCP #3000046794 / CN #500034183) reflects an update to the verbiage in the note in Table 2A-2 Approved Stainless Steel Terminations and Adapters - Category IV on page 17.

Revision AL (PCP #300049089 / CN #500036206) reflects changes to the gas check instructions on page 39 and a new image for Fig. 6-4 on page 40.

Revision AM (PCP #300051739 / CN #500038610) reflects the addition of DuraVent information to table 2A-2 on pages 16 and 17.

Revision AN (PCP #3000054410 / CN #500041125) reflects an update to the warnings on page 7.

Revision AP (PCP #3000054384 / CN #500041091) reflects an update to table 2D.

Revision AR (PCP #3000056994 / #500043275) reflects updated torque requirements on pages 65 and 66.

Revision AT (PCP #3000057732 / #500043895) reflects the addition of a carbon monoxide warning on page 3.

Revision AU (PCP #3000060567 . CN #500046569) reflects an update to table 2H.

Revision AV (PCP #3000062745 / CN #500048580) reflects updates to page 30 and pages 47-48.

Revision AW (PCP #3000062176 / CN #500048407) reflects updated ladder diagrams.

Revision AX (PCP #3000063806 / CN #500049657) reflects water quality updates throughout.

Revision AY (PCP #3000065587 / CN #500051364) reflects additional cautions and notices to pages 32, 36, and 37.

Revision BA (PCP #3000069081 / CN #500054642) reflects updates to the caution on pages 36 & 37.

Lochinvar®
HIGH EFFICIENCY BOILERS & WATER HEATERS
300 Maddox Simpson Parkway
Lebanon, TN 37090
615-889-8900 / Fax: 615-547-1000
www.Lochinvar.com

100208043_2000004587_Rev BA
11/25