100283650_2000541395_Rev W

EPIC™ FIRE TUBE

Epic Fire Tube Boiler and Combi Installation & Service Manual

EPC 110 - 199, EPB 80 - 199, & EFC 110 - 199

Series 100 - 101 & 110 - 111

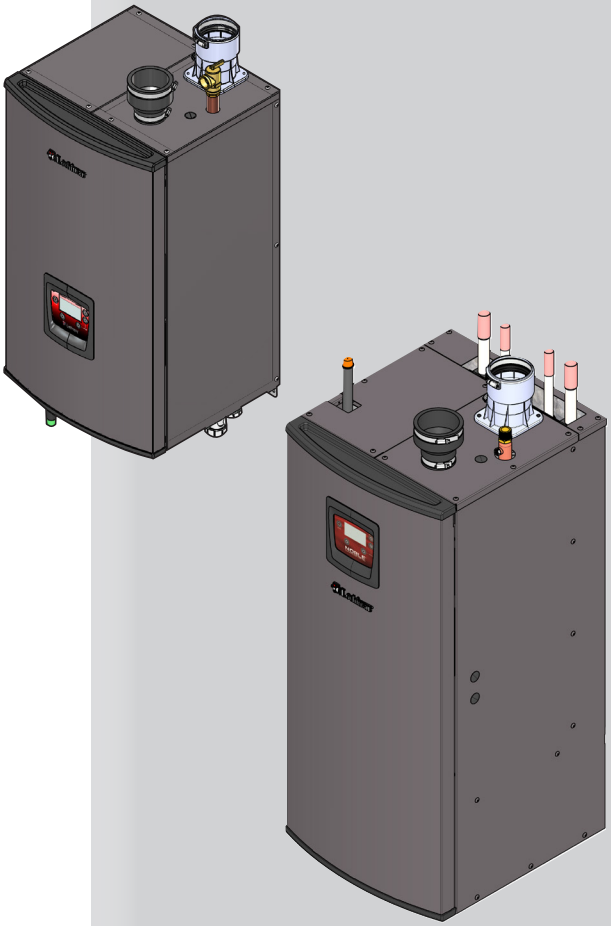

⚠ WARNING This manual must only be used by a qualified heating installer / service technician. Read all instructions, in this manual before installing. Perform steps in the order given. Failure to comply could result in severe personal injury, death, or substantial property damage.

Save this manual for future reference.

Lochinvar®
HIGH EFFICIENCY BOILERS & WATER HEATERS

Contents

HAZARD DEFINITIONS 2
PLEASE READ BEFORE PROCEEDING 3
THE EPIC FIRE TUBE --HOW IT WORKS 4-5
RATINGS 6
1. DETERMINE BOILER LOCATION
Provide Clearances 7
Provide Air Openings to Room 9
Wall Mounting Location 9
Flooring and Foundation 9
Residential Garage Installation 9
Vent and Air Piping 9
Prevent Combustion Air Contamination 10
Corrosive Contaminants and Sources 10
Using an Existing Vent System to Install a New Boiler 11
Removing a Boiler from Existing Common Vent 11
2. PREPARE BOILER
Remove Boiler from Wood Pallet 12
Gas Conversions 12-13
Mounting the Boiler 13
3. GENERAL VENTING
Direct Venting Options 14
Install Vent and Combustion Air Piping 15
Sizing 16
Max. Allowable Vent Piping Lengths 16
Materials 16
Optional Room Air 17
PVC/CPVC 18
Polypropylene 19
Stainless Steel Vent 20
4. SIDEWALL DIRECT VENTING
Vent/Air Termination - Sidewall 21-23
Determine Location 21-22
Prepare Wall Penetrations 23
Multiple Vent/Air Terminations 23
Sidewall Termination - Optional Concentric Vent 24-26
5. VERTICAL DIRECT VENTING
Vent/Air Termination - Vertical 27-28
Determine Location 27
Prepare Roof Penetrations 28
Multiple Vent/Air Terminations 28
Vertical Termination - Optional Concentric Vent 29-30
Alternate Vertical Concentric Venting 31-32
6A. HYDRONIC PIPING
System Water Piping Methods 33
Low Water Cutoff Device 33
Chilled Water System 33
Freeze Protection Fluids 33
General Piping Information 33
Near Boiler Piping Components 34
Hydronic Piping Diagrams 36-44
6B. DOMESTIC WATER PIPING
Scalding 45
Water Chemistry 45
Near Heater Piping Components 45
DHW Pressure Drop Chart 46
Combi Sequence of Operation 46
Domestic Water Piping Diagrams 47-50
7. GAS CONNECTIONS
Connecting Gas Supply Piping 51
Natural Gas 52
Pipe Sizing for Natural Gas 52
Natural Gas Supply Pressure Requirements 52
Propane Gas 52
Pipe Sizing for Propane Gas 52
Propane Supply Pressure Requirements 52
Check Inlet Gas Supply 53-54
Gas Pressure 54
Gas Valve Replacement 54
8. FIELD WIRING
Line Voltage Connections 55
Low Voltage Connections 55
9. CONDENSATE DISPOSAL
Condensate Drain 59
10. STARTUP 60-60
11. OPERATING INFORMATION
General 69
Menus 69-70
Control Inputs and Outputs 70-72
Cascade 73
Protection Features 73-74
Sequence of Operation 74-76
12. MAINTENANCE
Maintenance and Annual Startup 77-82
13. TROUBLESHOOTING 83-95
14. DIAGRAMS
Ladder Diagram (Standard)_Combi Only 96
Wiring Diagram (Standard)_Combi Only 97
Ladder Diagram (Standard)_Boiler Only 98
Wiring Diagram (Standard)_Boiler Only 99
Revision Notes ..... Back Cover

Hazard definitions

The following defined terms are used throughout this manual to bring attention to the presence of hazards of various risk levels or to important information concerning the life of the product.

⚠ DANGER DANGER indicates an imminently hazardous situation which, if not avoided, will result in death or serious injury.

⚠ WARNING WARNING indicates a potentially hazardous situation which, if not avoided, could result in death or serious injury.

⚠ CAUTION CAUTION indicates a potentially hazardous situation which, if not avoided, may result in minor or moderate injury.

CAUTION CAUTION used without the safety alert symbol indicates a potentially hazardous situation which, if not avoided, may result in property damage.

NOTICE NOTICE indicates special instructions on installation, operation, or maintenance that are important but not related to personal injury or property damage.

Please read before proceeding

⚠WARNING **Installer** – Read all instructions, in this manual before installing. Perform steps in the order given.

User – This manual is for use only by a qualified heating installer/ service technician. Refer to the User's Information Manual for your reference.

Have this boiler serviced/inspected by a qualified service technician, at least annually.

Failure to comply with the above could result in severe personal injury, death or substantial property damage.

NOTICE When calling or writing about the boiler – Please have the boiler model and serial number from the boiler rating plate.

Consider piping and installation when determining boiler location.

Any claims for damage or shortage in shipment must be filed immediately against the transportation company by the consignee.

Factory warranty (shipped with unit) does not apply to units improperly installed or improperly operated.

⚠WARNING Failure to adhere to the guidelines on this page can result in severe personal injury, death, or substantial property damage.

⚠WARNING If the information in this manual is not followed exactly, a fire or explosion may result causing property damage, personal injury or loss of life.

This appliance MUST NOT be installed in any location where gasoline or flammable vapors are likely to be present.

WHAT TO DO IF YOU SMELL GAS

- Do not try to light any appliance.
- Do not touch any electric switch; do not use any phone in your building.
- Immediately call your gas supplier from a near by phone. Follow the gas supplier's instructions.
- If you cannot reach your gas supplier, call the fire department.
- Installation and service must be performed by a qualified installer, service agency, or the gas supplier.

⚠WARNING DO NOT install units in rooms or environments that contain corrosive contaminants (see Table 1A on page 10). Failure to comply could result in severe personal injury, death, or substantial property damage.

When servicing boiler –

- To avoid electric shock, disconnect electrical supply before performing maintenance.
- To avoid severe burns, allow boiler to cool before performing maintenance.

Boiler operation –

- Do not block flow of combustion or ventilation air to the boiler.
- Should overheating occur or gas supply fail to shut off, do not turn off or disconnect electrical supply to circulator. Instead, shut off the gas supply at a location external to the appliance.
- Do not use this boiler if any part has been under water. The possible damage to a flooded appliance can be extensive and present numerous safety hazards. Any appliance that has been under water must be replaced.
- The installer must verify that at least one carbon monoxide alarm has been installed within a residential living space or home following the alarm manufacturer's instructions and applicable local codes before putting the appliance into operation.

Boiler water –

- Thoroughly flush the system to remove debris. Use an approved pre-commissioning cleaner (see Start-Up Section), without the boiler connected, to clean the system and remove sediment. The high efficiency heat exchanger can be damaged by build-up or corrosion due to sediment.
  NOTE: Cleaners are designed for either new systems or pre-existing systems. Choose accordingly.

Freeze protection fluids –

- NEVER use automotive antifreeze. Use only inhibited propylene glycol solutions, which are specifically formulated for hydronic systems. Ethylene glycol is toxic and can attack gaskets and seals used in hydronic systems.

The Epic Fire Tube - How it works...

1. **Heat exchanger**
   Allows system water to flow through specially designed coils for maximum heat transfer, while providing protection against flue gas corrosion. The coils are encased in a jacket that contains the combustion process.
2. **Blower**
   The blower pulls in air and gas through the venturi (item 5). Air and gas mix inside the blower and are pushed into the burner, where they burn inside the combustion chamber.
3. **Gas valve**
   The gas valve senses the negative pressure created by the blower, allowing gas to flow only if the gas valve is powered and combustion air is flowing.
4. **Venturi**
   The venturi controls air and gas flow into the burner.
5. **Flue gas sensor (limit rated)**
   This sensor monitors the flue gas exit temperature. The control module will modulate and shut down the boiler if flue gas temperature gets too hot. This protects the flue pipe from overheating.
6. **Boiler outlet temperature sensor (limit rated)**
   This sensor monitors boiler outlet water temperature (system supply). The control module will adjust boiler firing rate so the outlet temperature is correct.
7. **Boiler inlet temperature sensor**
   This sensor monitors return water temperature (system return).
8. **Temperature and pressure gauge (field installed, not shown)**
   Monitors the outlet temperature of the boiler as well as the system water pressure.
9. **Electronic LCD display**
   The electronic display consists of five (5) buttons, and a liquid crystal display. The display is used to make adjustments and read boiler status.
10. **Flue pipe adapter**
    Allows for the connection of the vent pipe system to the boiler.
11. **Burner (not shown)**
    Made with metal fiber and stainless steel construction, the burner uses pre-mixed air and gas and provides a wide range of firing rates.
12. **Boiler water outlet**
    The boiler water outlet is the boiler water connection for water leaving the boiler and entering the system.
13. **Domestic Hot Water (DHW) water outlet (Combi Only)**
    The DHW water outlet is the water connection for domestic water leaving the boiler and entering the system.
14. **Boiler water inlet**
    The boiler water inlet is the boiler water connection for water entering the boiler from the system.
15. **Domestic Hot Water (DHW) water inlet (Combi Only)**
    The DHW water inlet is the water connection for domestic water entering the boiler from the system.
16. **Gas connection pipe**
    Threaded pipe connection of 1/2". This pipe should be connected to the incoming gas supply for the purpose of delivering gas to the boiler.
17. **Boiler control module**
    The boiler control responds to internal and external signals and controls the blower, gas valve, and pumps to meet the demand.
18. **Air intake adapter**
    Allows for the connection of the air intake pipe to the boiler.
19. **High voltage junction box**
    The junction box contains the connection points for the line voltage power and all pumps.
20. **Low voltage connection board**
    The connection board is used to connect external low voltage devices.
21. **Low voltage wiring connections**
    Conduit connection points for the low voltage connection board.
22. **Condensate drain connection**
    The condensate drain connection provides a connection point to install a condensate drain line.
23. **Front access cover**
    Provides access to all internal components.
24. **Ignition / flame sense electrode**
    Used by the control module to detect the presence of burner flame.
25. **Flame inspection window**
    The quartz glass window provides a view of the burner surface and flame.
26. **Relief valve**
    Protects the heat exchanger from an over pressure condition. The relief valve provided with the unit is set at 50 psi on Combi models and 30 psi on Boiler models.
27. **Line voltage wiring connections (inside junction box)**
    Conduit connection points for the high voltage junction box.
28. **Air pressure switch**
    The air pressure switch detects blocked conditions.
29. **Transformer**
    The transformer provides 24V power to the integrated control.
30. **Pump (Combi Only)**
    Provides flow through the unit for space heating and domestic water applications. Serves as the boiler and DHW pump.
31. **Diverter valve (Combi Only)**
    Diverts boiler water from the heating loop to the DHW heat exchanger.
32. **DHW Flow switch (Combi Only)**
    The DHW flow switch detects a DHW draw, and signals the boiler to fire.
33. **Domestic Hot Water (DHW) sensor (Combi Only)**
    This sensor monitors DHW water temperature. The control module will adjust boiler firing rate so the DHW temperature is correct.
34. **Condensate trap**
    The condensate trap is sized for a 3/4" PVC outlet connection pipe. **Note:** The Epic Combi trap is factory installed whereas the Epic Boiler trap is factory supplied, but field installed.
35. **Water pressure switch**
    The water pressure switch detects low water pressure conditions.

The Epic Fire Tube - How it works... *(continued)*

NOTICE The Epic Combi Boiler is shown throughout the manual unless otherwise noted.

Floor standing

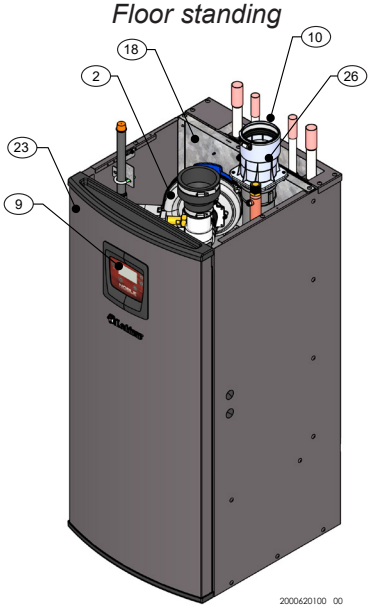

Wall hung

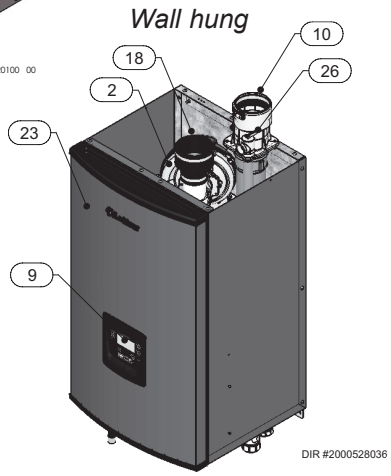

Front Outside View

*Bottom View - **Boiler Only***

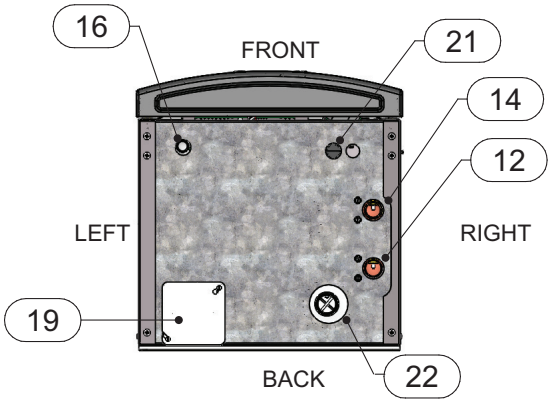

*Bottom View - **Combi Only***

Floor standing - Top View

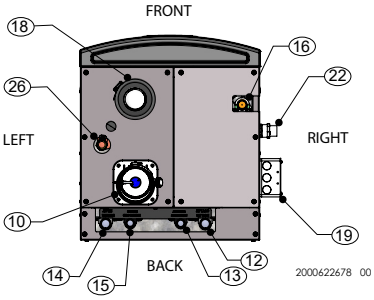

Wall hung

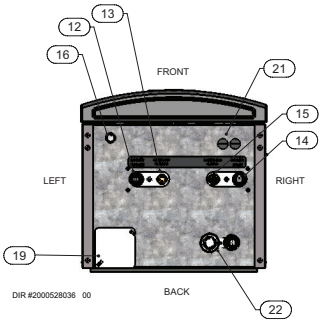

Floor standing

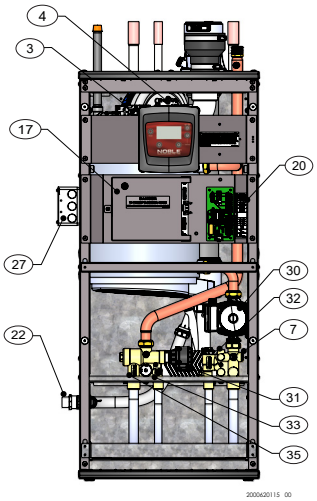

Wall hung

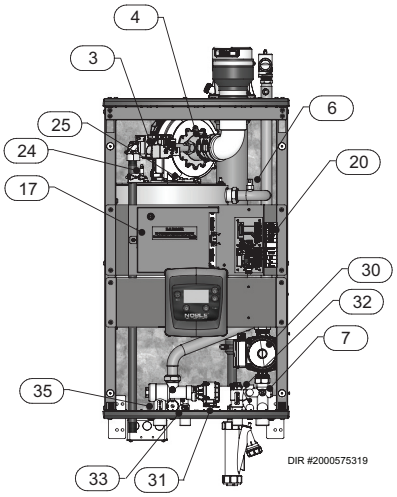

Front Inside View

Floor standing

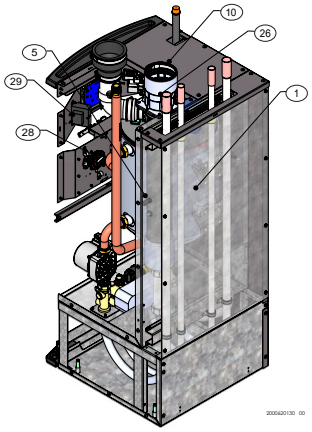

Wall hung

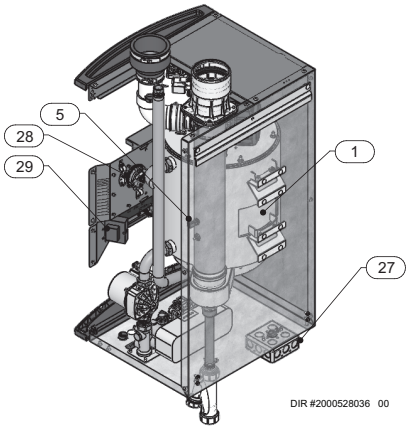

Side_Rear View

Ratings

LOW LEAD CONTENT

AHRI Rating					
Model Number Note: Change "N" to "L" for L.P. gas models.	Input MBH (Note 5)		Heating Capacity MBH (Note 2, 7)	Net AHRI Ratings Water, MBH (Note 3, 7)	AFUE % (Note 1, 7)
	Min	Max			
EPB80N	8.3	80	74	64	95.0
EFC, EP(B,C)110N	11	110	102	89	95.0
EFC, EP(B,C)110N-CAN	11	99	92	80	95.0
EFC, EP(B,C)150N	15	150	139	121	95.0
EFC, EP(B,C)199N	19.9	199	185	161	95.0

Other Specifications				
Boiler Water Content Gallons	SH Water Connections *NPT = Combi* *Sweat = Boiler*	DHW Water Connections *Combi Only*	Gas Connections	Vent/Air Size (Note 4)
1.2	1"	--	1/2"	3"
1.4	1"	3/4"	1/2"	3"
1.4	1"	3/4"	1/2"	3"
2.0	1"	3/4"	1/2"	3"
2.7	1"	3/4"	1/2"	3"

NOTICE Maximum allowed working pressure is located on the rating plate.

Notes:

1. As an Energy Star Partner, the manufacturer has determined that Epic Fire Tubes meet the Energy Star guidelines for energy efficiency.
2. The ratings are based on standard test procedures prescribed by the United States Department of Energy.
3. Net AHRI ratings are based on net installed radiation of sufficient quantity for the requirements of the building and nothing need be added for normal piping and pickup. Ratings are based on a piping and pickup allowance of 1.15.
4. Epic Fire Tubes require special gas venting. Use only the vent materials and methods specified in the Epic Fire Tube Installation and Service Manual.
5. Standard Epic Fire Tubes are equipped to operate from sea level to 4,500 feet **only** with no adjustments. The boiler will de-rate by 4% for each 1,000 feet above sea level up to 4,500 feet.
6. High altitude Epic Fire Tubes are equipped to operate from 3,000 to 9,600 feet. The boiler will de-rate 1.7% between 5,000 to 9,600 feet. For any units installed past 9,600 feet there is an additional de-rate of 4% per 1,000 feet beyond 9,600 feet per the National Fuel Gas Code. Appliances configured for high altitude shall not be installed below 3000 feet.

   The operation given in this manual remains the same as the standard boilers. A high altitude label (as shown in FIG. A) is also affixed to the unit.

   De-rate values are based on proper combustion calibration and CO_2's adjusted to the recommended levels.

   For installations above 9,600 feet, please consult the factory.
7. Ratings have been confirmed by the Hydronics Institute, Section of AHRI.
8. The manual reset high limit provided with the Epic Fire Tube is listed to UL353.

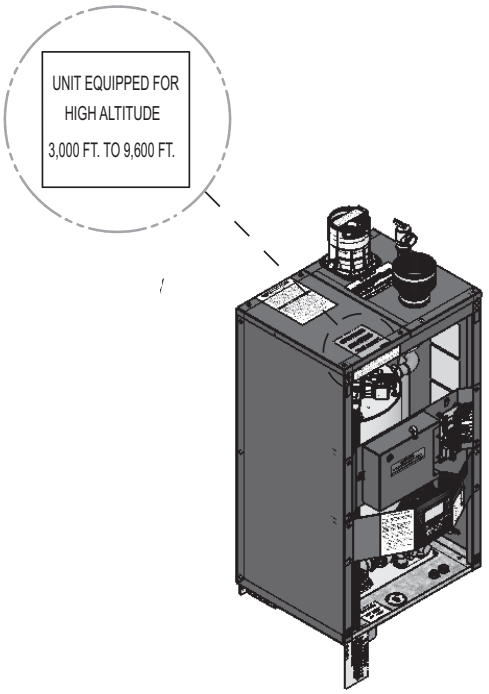

***Figure A** High Altitude Label Location (Combi Only)*

1 Determine boiler location

Installation must comply with:

- Local, state, provincial, and national codes, laws, regulations, and ordinances.
- National Fuel Gas Code, ANSI Z223.1 – latest edition.
- National Electrical Code.
- For Canada only: B149.1 Installation Code, CSA C22.1 Canadian Electrical Code Part 1 and any local codes.

NOTICE The Epic Fire Tube gas manifold and controls met safe lighting and other performance criteria when the boiler underwent tests specified in ANSI Z21.13 – latest edition.

Before locating the boiler, check:

1. Check for nearby connection to:
   - System water piping
   - Venting connections
   - Gas supply piping
   - Electrical power
2. Locate the appliance so that if water connections should leak, water damage will not occur. When such locations cannot be avoided, it is recommended that a suitable drain pan, adequately drained, be installed under the appliance. The pan must not restrict combustion air flow. Under no circumstances is the manufacturer to be held responsible for water damage in connection with this appliance, or any of its components.
3. Check area around the boiler. Remove any combustible materials, gasoline and other flammable liquids.

⚠WARNING Failure to keep boiler area clear and free of combustible materials, gasoline, and other flammable liquids and vapors can result in severe personal injury, death, or substantial property damage.

4. The Epic Fire Tube must be installed so that gas control system components are protected from dripping or spraying water or rain during operation or service.
5. If a new boiler will replace an existing boiler, check for and correct system problems, such as:
   - System leaks causing oxygen corrosion or heat exchanger cracks from hard water deposits.
   - Incorrectly-sized expansion tank.
   - Lack of freeze protection fluids in boiler water causing system and boiler to freeze and leak.
   - Debris left from existing piping, if not flushed and cleaned with an appropriate cleaner.
6. Check around the boiler for any potential air contaminants that could risk corrosion to the boiler or the boiler combustion air supply (see Table 1A on page 10). Prevent combustion air contamination. Remove any of these contaminants from the boiler area.

⚠WARNING DO NOT install units in rooms or environments that contain corrosive contaminants (see Table 1A on page 10). Failure to comply could result in severe personal injury, death, or substantial property damage.

⚠WARNING DO NOT install the boiler in a room likely to freeze.

⚠WARNING This appliance is certified as an indoor appliance. Do not install the appliance outdoors or locate where the appliance will be exposed to freezing temperatures or to temperatures that exceed 100°F.

Failure to install the appliance indoors could result in severe personal injury, death, or substantial property damage.

⚠WARNING This appliance requires a special venting system. The vent connection to the appliance is made of CPVC. Field supplied vent fittings must be cemented to the CPVC fitting on the boiler. Use only the vent materials, primer, and cement specified in the manual to make the vent connections. Failure to follow this warning could result in fire, personal injury, or death.

Closet and alcove installations

A closet is any room the boiler is installed in which is less than 102 cubic feet for all models.

An alcove is any room which meets the criteria for a closet with the exception that it does not have a door.

Example: Room dimensions = 4 feet long, 3 feet wide, and 7 foot ceiling = 4 x 3 x 7 = 84 cubic feet. This would be considered a closet for an Epic Fire Tube.

⚠WARNING For closet and alcove installations as shown in FIG.'s 1-1 and 1-2, CPVC, polypropylene or stainless steel vent material must be used inside the structure. The two ventilating air openings shown in FIG. 1-1 are required for this arrangement. Failure to follow this warning could result in fire, personal injury, or death.

Provide clearances:

Clearances from combustible materials

1. Hot water pipes—at least 1/4" from combustible materials.
2. Vent pipe – at least 1" from combustible materials.
3. See FIG.'s 1-1 and 1-2 on page 8 for other clearance minimums.

Clearances for service access

1. See page 9 for recommended service clearances. If you do not provide the minimum clearances shown, it may not be possible to service the boiler without removing it from the space.

1 Determine boiler location

***Figure 1-1** Closet Installation - Minimum Required Clearances*

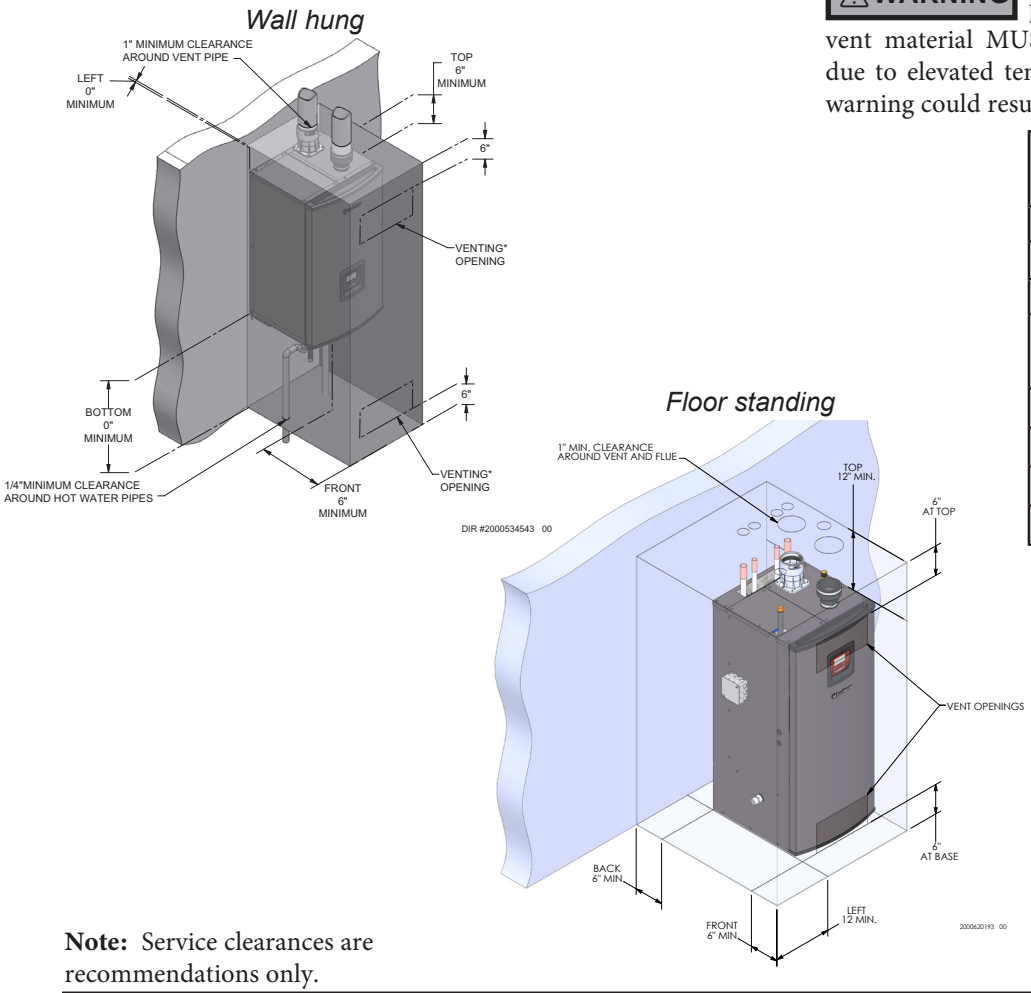

⚠WARNING For closet installations, CPVC, polypropylene, or stainless steel vent material MUST BE used in a closet structure due to elevated temperatures. Failure to follow this warning could result in fire, personal injury, or death.

Minimum Clearances to Combustible Materials	
Location	**Clearances**
From Top of the Unit	6"
From Front of the Unit	6"
From Flue or Vent Connector in any Direction	1"
From Back of the Unit	0"
From the Left Side of the Unit	0"
From the Right Side of the Unit	0"
Type of Floor - Combustible	

Note: Service clearances are recommendations only.

***Figure 1-2** Alcove Installation - Minimum Required Clearances*

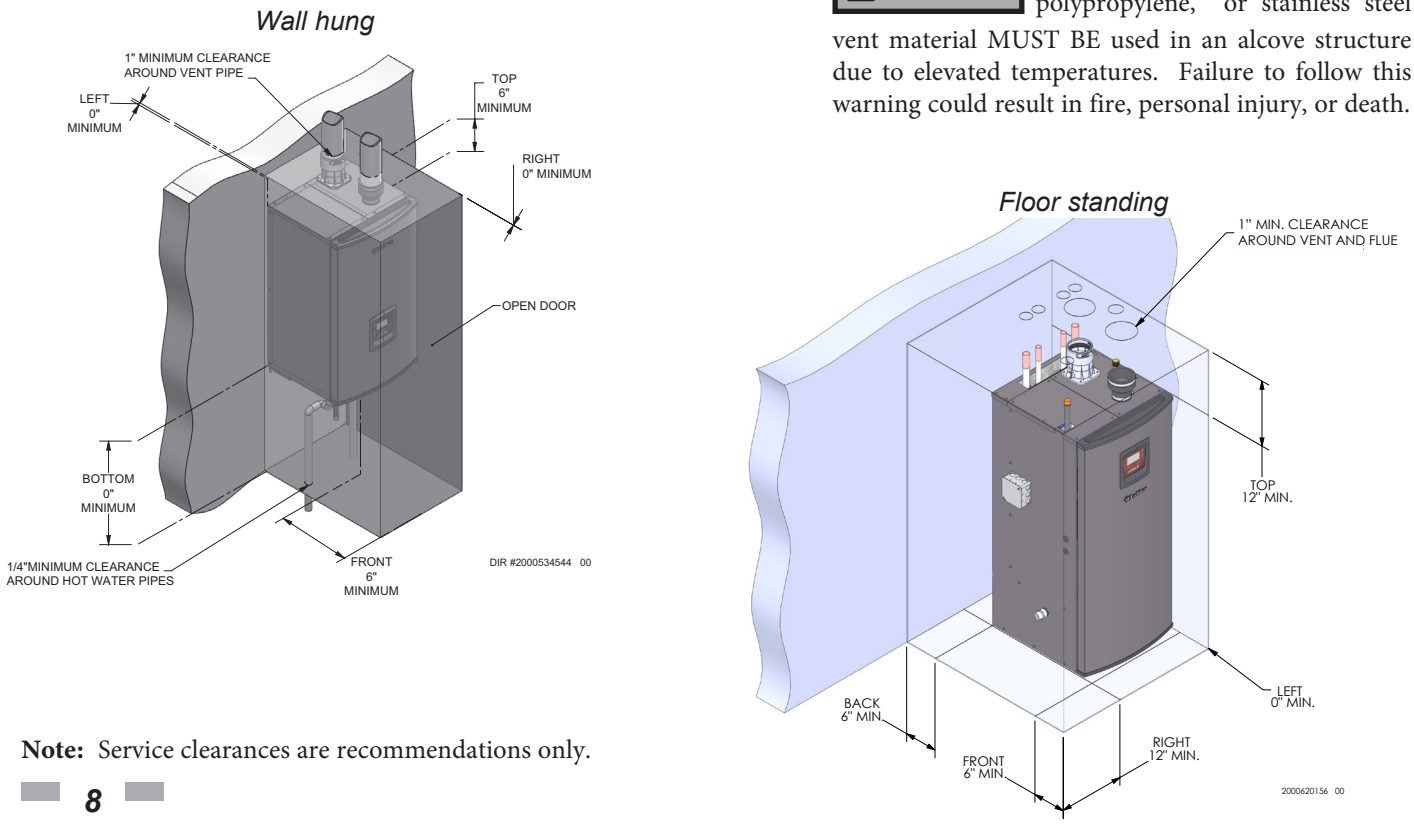

⚠WARNING For alcove installations, CPVC, polypropylene, or stainless steel vent material MUST BE used in an alcove structure due to elevated temperatures. Failure to follow this warning could result in fire, personal injury, or death.

Note: Service clearances are recommendations only.

1 Determine boiler location *(continued)*

NOTICE If you do not provide the recommended service clearances shown, it may not be possible to service the boiler without removing it from the space.

Recommended clearances for service access

- Front ..... 24"
- Left ..... 12"
- Right ..... 12"
- Bottom *(wall mount units only)* ..... 24"
- Back *(floor standing units only)*..... 6"
- Top *(floor standing units only)*.....12"

Provide air openings to room:

Boiler alone in boiler room

1. No air ventilation openings into the boiler room are needed when clearances around the Epic Fire Tube are at least equal to the SERVICE clearances shown in FIG.'s 1-1 and 1-2. For spaces that do NOT supply this clearance, provide two openings as shown in FIG. 1-1. Each opening must provide one square inch free area per 1,000 Btu/hr of boiler input.

Boiler in same space with other gas or oil-fired appliances

1. Follow the National Fuel Gas Code (U.S.) or CSA B149.1 (Canada) to size/verify size of the combustion/ventilation air openings into the space.

⚠WARNING The space must be provided with combustion/ventilation air openings correctly sized for all other appliances located in the same space as the Epic Fire Tube.

Do not install the boiler in an attic.

Failure to comply with the above warnings could result in severe personal injury, death, or substantial property damage.

2. Size openings only on the basis of the other appliances in the space. No additional air opening free area is needed for the Epic Fire Tube because it takes its combustion air from outside (direct vent installation).

Wall mounting location

Ensure the wall for which the boiler is intended to be mounted is comprised of either, cement, brick, block, or wooden studs spaced 16" apart from center. Ensure the wall is capable of supporting at least 200 pounds.

If flooding is possible, elevate the boiler sufficiently to prevent water from reaching the boiler.

Ensure the boiler is installed in a location that minimizes the risk of water damage due to valves, pumps, etc.

Flooring and foundation *(floor standing units only)*

Flooring

The Epic Fire Tube floor standing boiler is approved for installation on combustible flooring, but must never be installed on carpeting.

⚠WARNING Do not install the boiler on carpeting even if foundation is used. Fire can result, causing severe personal injury, death, or substantial property damage.

If flooding is possible, elevate the boiler sufficiently to prevent water from reaching the boiler.

Residential garage installation

Precautions

Take the following precautions when installing the appliance in a residential garage. If the appliance is located in a residential garage, it should be installed in compliance with the latest edition of the National Fuel Gas Code, ANSI Z223.1 and/or CAN/CGA-B149 Installation Code.

- Appliances located in residential garages and in adjacent spaces that open to the garage and are not part of the living space of a dwelling shall be installed so that all burners and burner ignition devices are located not less than 18 inches (46 cm) above the floor.
- The appliance shall be located or protected so that it is not subject to physical damage by a moving vehicle.

Vent and air piping

The Epic Fire Tube requires a special vent system, designed for pressurized venting.

The boiler is to be used for either direct vent installation or for installation using indoor combustion air. When room air is considered, see Section 3, General Venting. Note prevention of combustion air contamination below when considering vent/air termination.

Vent and air must terminate near one another and may be vented vertically through the roof or out a side wall, unless otherwise specified. You may use any of the vent/air piping methods covered in this manual. Do not attempt to install the Epic Fire Tube using any other means.

Be sure to locate the boiler such that the vent and air piping can be routed through the building and properly terminated. The vent/air piping lengths, routing and termination method must all comply with the methods and limits given in this manual.

1 Determine boiler location

***Table 1A** Corrosive Contaminants and Sources*

Products to avoid:
Spray cans containing chloro/fluorocarbons
Permanent wave solutions
Chlorinated waxes/cleaners
Chlorine-based swimming pool chemicals
Calcium chloride used for thawing
Sodium chloride used for water softening
Refrigerant leaks
Paint or varnish removers
Hydrochloric acid/muriatic acid
Cements and glues
Antistatic fabric softeners used in clothes dryers
Chlorine-type bleaches, detergents, and cleaning solvents found in household laundry rooms
Adhesives used to fasten building products and other similar products
Areas likely to have contaminants
Dry cleaning/laundry areas and establishments
Swimming pools
Metal fabrication plants
Beauty shops
Refrigeration repair shops
Photo processing plants
Auto body shops
Plastic manufacturing plants
Furniture refinishing areas and establishments
New building construction
Remodeling areas
Garages with workshops

Prevent combustion air contamination

Install air inlet piping for the Epic Fire Tube as described in this manual. Do not terminate vent/air in locations that can allow contamination of combustion air. Refer to Table 1A, page 10 for products and areas which may cause contaminated combustion air.

⚠WARNING You must pipe combustion air to the boiler air intake. Ensure that the combustion air will not contain any of the contaminants in Table 1A, page 10. Contaminated combustion air will damage the boiler, resulting in possible severe personal injury, death or substantial property damage. Do not pipe combustion air near a swimming pool, for example. Also, avoid areas subject to exhaust fumes from laundry facilities. These areas will always contain contaminants.

1 Determine boiler location *(continued)*

When using an existing vent system to install a new boiler:

⚠WARNING Failure to follow all instructions can result in flue gas spillage and carbon monoxide emissions, causing severe personal injury or death.

Check the following venting components before installing:

- **Material** - For materials listed for use with this appliance, see Section 3 - General Venting.
- **Size** - To ensure proper pipe size is in place, see Table 3A. Check to see that this size is used throughout the vent system.
- **Manufacturer** - For a polypropylene or stainless steel application, you must use only the listed manufacturers and their type product listed in Tables 3E and 3G for CAT IV positive pressure venting with flue producing condensate.
- **Supports** - Non-combustible supports must be in place allowing a minimum 1/4" rise per foot. The supports should adequately prevent sagging and vertical slip, by distributing the vent system weight. For additional information, consult the vent manufacturer's instructions for installation.
- **Terminations** - Carefully review Sections 3 through 5 to ensure requirements for the location of the vent and air terminations are met and orientation of these fit the appropriate image from the Sidewall or Vertical options listed in the General Venting Section. For stainless steel vent, only use terminations listed in Table 3H for the manufacturer of the installed vent.
- **Seal** - With prior requirements met, the system should be tested to the procedure listed in parts (c) through (f) of the Removal of an Existing Boiler Section on page 11.

With polypropylene and stainless steel vent, seal and connect all pipe and components as specified by the vent manufacturer used; with PVC/CPVC vent, see the Installing Vent or Air Piping Section on page 18.

⚠WARNING If any of these conditions are not met, the existing system must be updated or replaced for that concern. Failure to follow all instructions can result in flue gas spillage and carbon monoxide emissions, causing severe personal injury or death.

When removing a boiler from existing common vent system:

⚠ DANGER Do not install the Epic Fire Tube into a common vent with any other appliance. This will cause flue gas spillage or appliance malfunction, resulting in possible severe personal injury, death, or substantial property damage.

⚠WARNING Failure to follow all instructions can result in flue gas spillage and carbon monoxide emissions, causing severe personal injury or death.

At the time of removal of an existing boiler, the following steps shall be followed with each appliance remaining connected to the common venting system placed in operation, while the other appliances remaining connected to the common venting system are not in operation.

a. Seal any unused openings in the common venting system.

b. Visually inspect the venting system for proper size and horizontal pitch and determine there is no blockage or restriction, leakage, corrosion, or other deficiencies, which could cause an unsafe condition.

c. Test vent system – Insofar as is practical, close all building doors and windows and all doors between the space in which the appliances remaining connected to the common venting system are located and other spaces of the building. Turn on clothes dryers and any appliance not connected to the common venting system. Turn on any exhaust fans, such as range hoods and bathroom exhausts, so they will operate at maximum speed. Do not operate a summer exhaust fan. Close fireplace dampers.

d. Place in operation the appliance being inspected. Follow the lighting instructions. Adjust thermostat so appliance will operate continuously.

e. Test for spillage at the draft hood relief opening after 5 minutes of main burner operation. Use the flame of a match or candle, or smoke from a cigarette, cigar, or pipe.

f. After it has been determined that each appliance remaining connected to the common venting system properly vents when tested as outlined herein, return doors, windows, exhaust fans, fireplace dampers, and any other gas-burning appliance to their previous conditions of use.

g. Any improper operation of the common venting system should be corrected so the installation conforms with the National Fuel Gas Code, ANSI Z223.1/NFPA 54 and/or CAN/CSA B149.1, Natural Gas and Propane Installation Code. When resizing any portion of the common venting system, the common venting system should be resized to approach the minimum size as determined using the appropriate tables in Part 11 of the National Fuel Gas Code, ANSI Z223.1/NFPA and/or CAN/CSA B149.1, Natural Gas and Propane Installation Code.

2 Prepare boiler

Remove boiler from wood pallet

1. After removing the outer shipping carton from the boiler, remove the parts box.

Wall Mount

2. To remove the boiler from the pallet:
   a. Remove the two (2) lag bolts securing the bottom of the unit to the pallet.
   b. Lift the boiler off the wall bracket mounted to the pallet (FIG. 2-1).
3. Remove the two (2) lag bolts securing the wall bracket to the wood pallet. Be certain not to lose the wall bracket as it will be needed for securing the boiler to the wall (FIG. 2-4).

Floor Standing

2. Remove the front door to access the lag bolts in front of the unit (FIG. 2-1).
3. To remove the boiler from the pallet (after removing the front door):
   a. Remove the two lag bolts from the wood pallet inside the boiler (FIG. 2-1).
   b. Detach the boiler from the lag bolts in the rear of the unit, see FIG 2-1.

NOTICE Do not drop the boiler or bump the jacket on the floor or pallet. Damage to the boiler can result.

CAUTION Do not attempt to use the water pipe fittings or gas pipe to lift the boiler.

CAUTION Do not attempt to lift the boiler using the gas pipe as a handle.

Figure 2-1 *Boiler Mounted on Shipping Pallet*

Wall hung

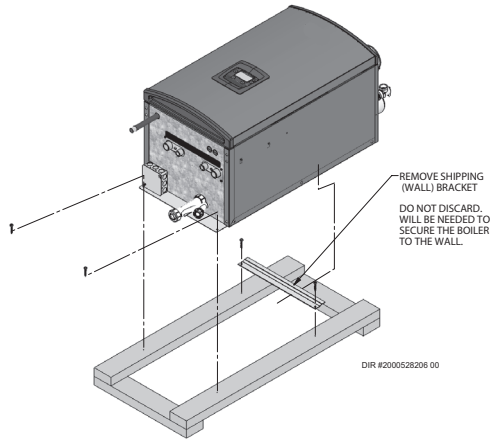

Floor standing

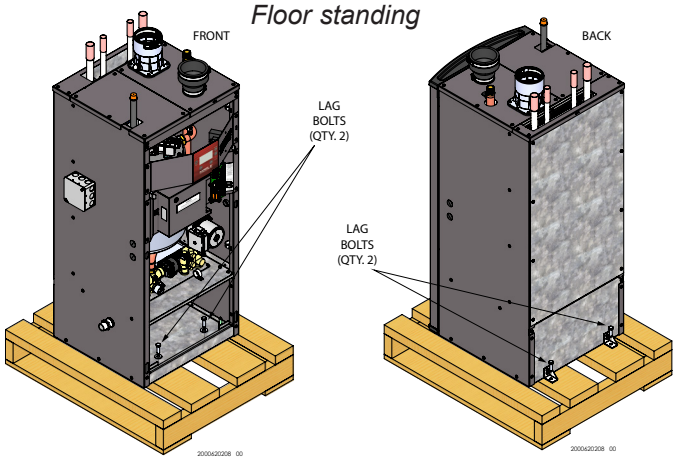

Gas conversions

WARNING For a boiler already installed, you must turn off gas supply, turn off power and allow boiler to cool before proceeding. You must also completely test the boiler after conversion to verify performance as described under Start-up, Section 10 of this manual.

Failure to comply could result in severe personal injury, death, or substantial property damage.

You must install a propane venturi to operate the Epic Fire Tube on propane gas. Verify when installing that the venturi label marking matches the boiler size. Refer to the Replacement Parts List for the appropriate LP Conversion Kit applicable to your unit's size and serial number.

1. If boiler is already installed, you must turn off the gas supply, turn off the power, and allow the boiler to cool before proceeding.
2. Remove the front access cover from the unit (no tools required for removal).
3. Using a 5/16" nut driver, loosen the rachet clamp securing the air intake fitting to the venturi assembly. Slide the rubber boot off the venturi.
4. Using an adjustable wrench, loosen the union between the gas valve adapter and the venturi assembly. Remove the gasket between the gas piping and venturi (FIG. 2-2).
5. Using a 3 mm Allen wrench, remove the three (3) screws securing the venturi to the fan assembly and proceed to remove the natural gas venturi from the unit, making sure not to damage the blower O-ring gasket (FIG. 2-2).
6. Install the air shutter.
   a. Disconnect the wiring from the fan and remove the bolts securing the fan to the heat exchanger top plate.
   b. Remove the fan and gasket, and install the air shutter provided in the kit. **Note:** On EPC/EFC110 models, the air shutter MUST be installed in the proper direction. Install the air shutter so that the hole in the corner is oriented towards the back right corner of the unit (opposite the front door and gas piping).
   c. Replace all torn or damaged gaskets. Reassemble the fan assembly and reconnect the wiring harnesses before operation.
7. Install the propane venturi and verify the following:
   a. The UP arrow on the plastic housing is pointing upward.
   b. The threaded connection for the gas piping is facing towards the LEFT of the unit.
8. Reassemble the unit by following the previous steps in reverse order, taking care to ensure that the venturi adapter gasket is seated properly before tightening the nut on the venturi. NOTE: Replace any torn or damaged gasket(s) that may have been damaged or torn during installation.
9. After installation is complete, fill out the gas conversion label (in the conversion kit bag) and affix it to the unit to the right of the control display as shown in FIG. 2-3.
10. Replace the front access cover removed in Step 2 and resume operation.

DANGER When removing the natural gas venturi, inspect the gasket at the gas connection and the O-ring at the blower. These gaskets must be in good condition and must be installed. Failure to comply will cause a gas leak, resulting in severe personal injury or death.

2 Prepare boiler *(continued)*

⚠WARNING After converting to LP, check combustion per the Start-up procedure in Section 10 of this manual. Failure to check and verify combustion could result in severe personal injury, death, or substantial property damage.

Figure 2-2 *Remove Natural Gas Venturi*

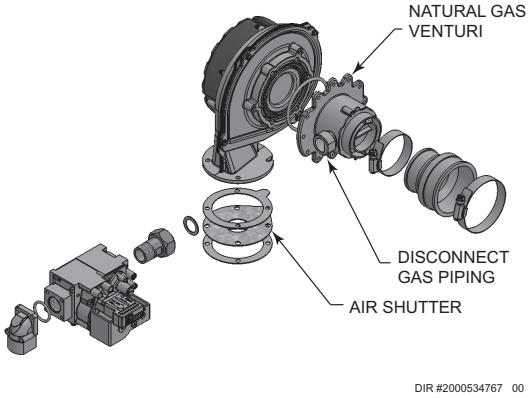

Figure 2-3 *Gas Conversion Label Location*

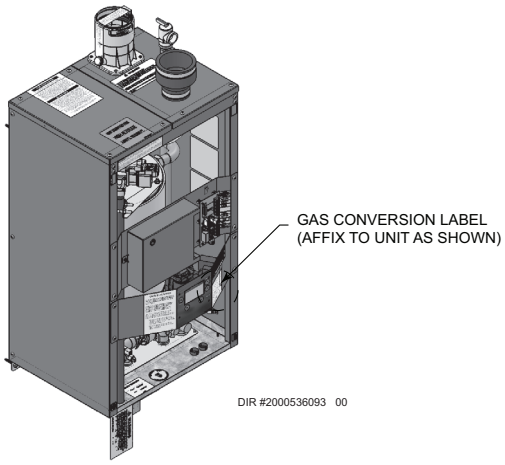

Leveling the boiler *(floor standing units only)*

1. Set the boiler in place and check level.
   a) Adjust legs if necessary to level boiler, see FIG. 2-5 below.

Figure 2-5 *Leveling Legs on the Boiler*

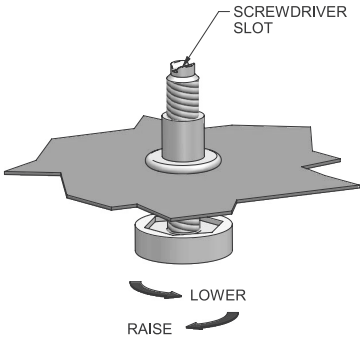

Mounting the boiler *(wall mount units only)*

See page 9 of this manual for boiler mounting location instructions.

NOTICE The Epic Fire Tube Wall Mount is not intended for floor installation.

Mounting to a wood studded wall:

1. The wall mount bracket is designed for a stud spacing of 16 inches from center (FIG. 2-4). For other stud spacing a solid mounting surface must be provided by the installer.

⚠WARNING Do not mount the boiler to a hollow wall. Be sure to mount the boiler to the studs only.

2. Mount the wall bracket using the 2 1/4" lag bolts provided. Make sure the top edge of the bracket is away from the wall. Ensure the bracket is level when mounted. Extreme care is needed to ensure the bolts are secured in the center of the studs.
3. Hang the boiler on the bracket and secure the bottom of the boiler with two (2) additional lag bolts provided.

⚠WARNING The boiler is too heavy for a single person to lift. A minimum of two people is needed for mounting the boiler onto the bracket.

Mounting to a concrete wall:

1. Mount the wall bracket using the two (2) wedge anchor bolts provided with the bracket (FIG. 2-4). To mount the wedge anchor bolts, drill a 1/4" diameter hole 1 1/8" deep and insert anchor. Hang the bracket from the anchor and secure with the two nuts provided. Make sure the top edge of the bracket is away from the wall. Ensure bracket is level when mounted.

Note: If wall thickness does not allow a 1 1/8" deep hole, field supplied hardware suitable for the application should be provided.

2. Hang the boiler on the bracket and secure the bottom of the boiler with two (2) remaining anchors, following the instructions above.

Mounting to a metal studded wall:

1. The wall mount bracket is designed for a stud spacing of 16 inches from center (FIG. 2-4). For other stud spacing a solid mounting surface must be provided by the installer.

⚠WARNING Do not mount the boiler to a hollow wall. Be sure to mount the boiler to the studs only.

2. Mount the wall bracket using two (2) field supplied toggle bolts capable of supporting 100 pounds each. Ensure the top edge of the bracket is away from the wall. Ensure the bracket is level when mounted. Extreme care is needed to ensure the bolts are secured in the center of the studs.
3. Hang the boiler on the bracket and secure the bottom of the boiler with two (2) field supplied toggle bolts.

Figure 2-4 *Mounting the boiler*

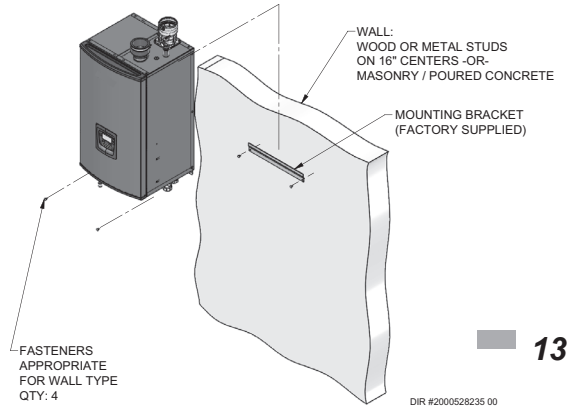

3 General venting

Direct venting options - Sidewall Vent

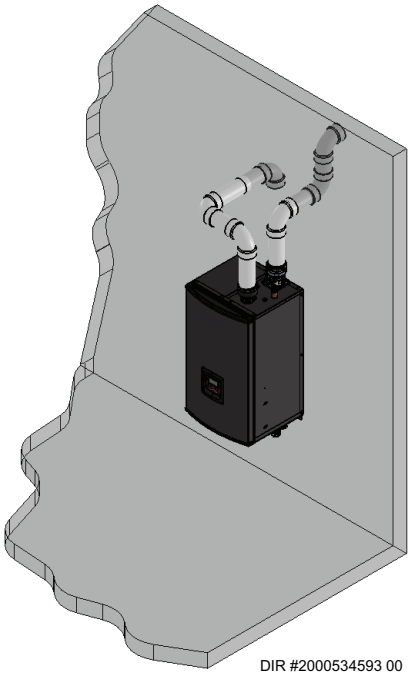

Figure 3-1 *Two-Pipe Sidewall Termination - See page 22 for more details*

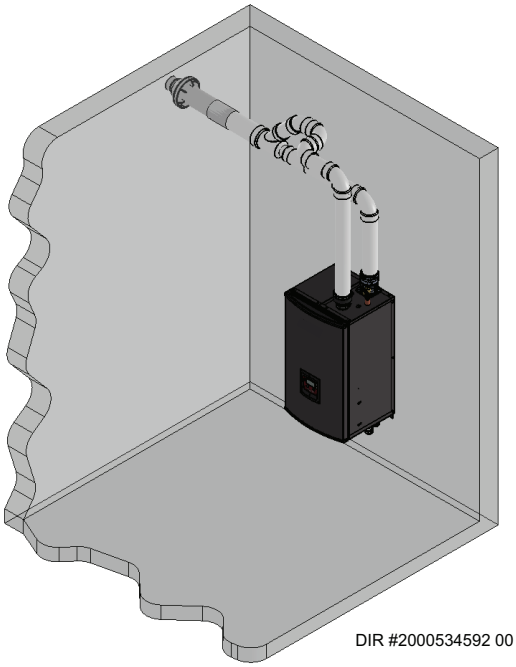

Figure 3-2 *PVC/CPVC Concentric Sidewall Termination - See page 25 for more details*

Direct venting options - Vertical Vent

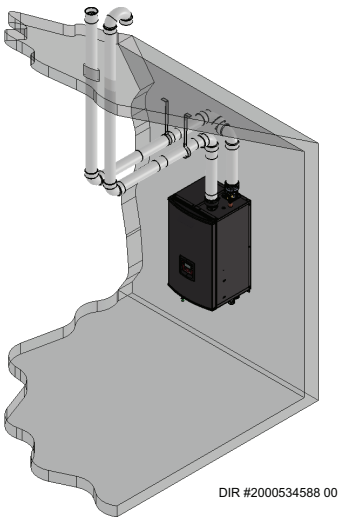

Figure 3-3 *Two-Pipe Vertical Termination - See page 28 for more details*

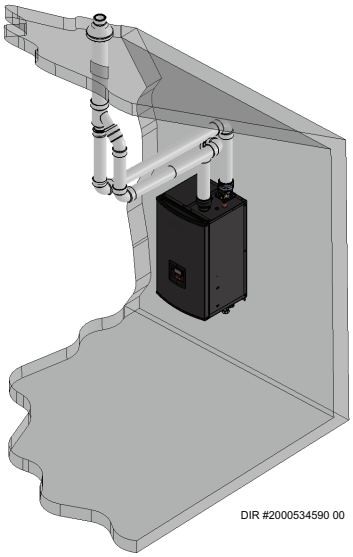

Figure 3-4 *PVC/CPVC Concentric Vertical Termination - See page 30 for more details*

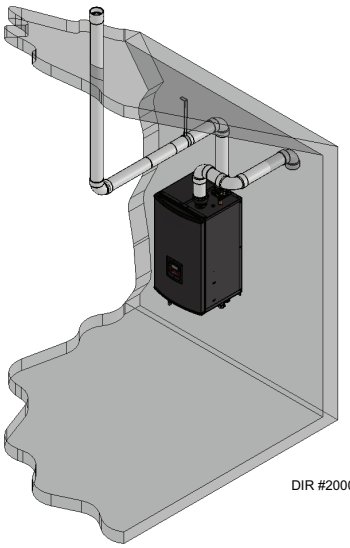

Figure 3-5 *Vertical Vent, Sidewall Air*

3 General venting *(continued)*

Install vent and combustion air piping

⚠ DANGER The Epic Fire Tube must be vented and supplied with combustion and ventilation air as described in this section. Ensure the vent and air piping and the combustion air supply comply with these instructions regarding vent system, air system, and combustion air quality. See also Section 1 of this manual.

Inspect finished vent and air piping thoroughly to ensure all are airtight and comply with the instructions provided and with all requirements of applicable codes.

Failure to provide a properly installed vent and air system will cause severe personal injury or death.

⚠ WARNING This appliance requires a special venting system. Use only approved PVC, CPVC, polypropylene or stainless steel pipe and fittings listed in Tables 3D, 3E, and 3G for vent pipe, and fittings. Failure to comply could result in severe personal injury, death, or substantial property damage.

⚠ WARNING DO NOT mix components from different systems. The vent system could fail, causing leakage of flue products into the living space. Mixing of venting materials will void the warranty and certification of the appliance.

NOTICE Installation must comply with local requirements and with the National Fuel Gas Code, ANSI Z223.1 for U.S. installations or CSA B149.1 for Canadian installations.

⚠ WARNING For closet and alcove installations, CPVC, polypropylene or stainless steel material MUST BE used in a closet/alcove structure. Failure to follow this warning could result in fire, personal injury, or death.

⚠ CAUTION Improper installation of venting systems may result in injury or death.

NOTICE Follow the instructions in Section 1, page 11 of this manual when removing a boiler from an existing vent system.

⚠ WARNING Do not connect any other appliance to the vent pipe or multiple boilers to a common vent pipe. Failure to comply could result in severe personal injury, death, or substantial property damage.

The Epic Fire Tube vent and air piping can be installed through the roof or through a sidewall. Follow the procedures in this manual for the method chosen. Refer to the information in this manual to determine acceptable vent and air piping length.

You may use any of the vent/air piping methods covered in this manual. Do not attempt to install the Epic Fire Tube using any other means.

You must also install air piping from outside to the boiler air intake adapter unless following the Optional Room Air instructions on page 17 of this manual. The resultant installation is direct vent (sealed combustion) .

Air intake/vent connections

1. **Combustion Air Intake Connector** (FIG. 3-6) - Used to provide combustion air directly to the unit from outdoors. A fitting is provided on the unit for final connection. Combustion air piping must be supported per guidelines listed in the National Mechanical Code, Section 305, Table 305.4 or as local codes dictate.
2. **Vent Connector** (FIG.'s 3-6 thru 3-10) - Used to provide a passageway for conveying combustion gases to the outside. A transition fitting is provided on the unit for final connection. Vent piping must be supported per the National Building Code, Section 305, Table 305.4 or as local codes dictate.

Figure 3-6 *Near Boiler Air Piping*

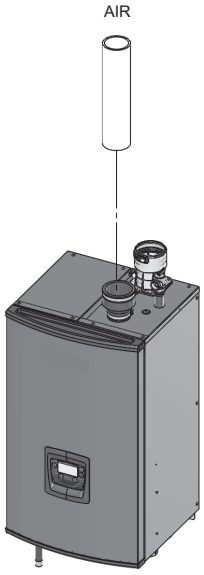

3 General venting

Sizing

The Epic Fire Tube uses model specific combustion air intake and vent piping sizes as detailed in Table 3A below.

***Table 3A** Air Intake/Vent Piping Sizes*

Model	2" Max Vent/Air	3" Max Vent/Air
80 - 110	100 feet	100 feet
150	60 feet	100 feet
199	50 feet	100 feet

NOTICE Increasing or decreasing combustion air or vent piping sizes is not authorized unless otherwise specified in this manual.

Minimum / Maximum allowable combustion air and vent piping lengths are as follows:

Combustion Air = 7 equivalent feet minimum / 100 equivalent feet maximum

Vent = 7 equivalent feet minimum / 100 equivalent feet maximum

When determining equivalent combustion air and vent length, add 5 feet for each 90° elbow and 3 feet for each 45° elbow.

EXAMPLE: 20 feet of PVC pipe + (4) 90° elbows + (2) 45° elbows + (1) concentric vent kit (100140480) = 49 equivalent feet of piping.

NOTICE The appliance output rating will reduce by up to 1.5% for each 25 feet of vent length. The appliance output rating will reduce by up to 3.5% for each 25 feet of vent length for the 199 model with a 2" vent configuration.

***Table 3B** Concentric Vent Kit Equivalent Vent Lengths*

Model	Kit Number	Equivalent Vent Length	Vent Size
80 - 150	100140485	3 feet	2 inch
80 - 199	100140480	3 feet	3 inch

Materials

Air inlet pipe materials:

The air inlet pipe(s) must be sealed. Choose acceptable combustion air inlet pipe materials from the following list:

PVC, CPVC, Polypropylene or ABS
Galvanized steel vent pipe with joints and seams sealed as specified in this section.
Type "B" double-wall vent with joints and seams sealed as specified in this section.
AL29-4C, stainless steel material to be sealed to specification of its manufacturer.

*Plastic pipe may require an adapter (not provided) to transition between the air inlet connection on the appliance and the plastic air inlet pipe.

⚠ WARNING Using air intake materials other than those specified can result in personal injury, death or property damage.

NOTICE The use of double-wall vent or insulated material for the combustion air inlet pipe is recommended in cold climates to prevent the condensation of airborne moisture in the incoming combustion air.

Sealing of Type "B" double-wall vent material or galvanized vent pipe material used for air inlet piping on a sidewall or vertical rooftop Combustion Air Supply System:

a. Seal all joints and seams of the air inlet pipe using either Aluminum Foil Duct Tape meeting UL Standard 723 or 181A-P or a high quality UL Listed silicone sealant such as those manufactured by Dow Corning or General Electric.
b. Do not install seams of vent pipe on the bottom of horizontal runs.
c. Secure all joints with a minimum of three (3) sheet metal screws or pop rivets. Apply Aluminum Foil Duct Tape or silicone sealant to all screws or rivets installed in the vent pipe.
d. Ensure that the air inlet pipes are properly supported.

The PVC, CPVC, or ABS air inlet pipe should be cleaned and sealed with the pipe manufacturer's recommended solvents and standard commercial pipe cement for the material used. The PVC, CPVC, ABS, or Flex Duct air inlet pipe should use a silicone sealant to ensure a proper seal at the appliance connection and the air inlet cap connection. Dryer vent or flex duct should use a screw type clamp to seal the vent to the appliance air inlet and the air inlet cap. Proper sealing of the air inlet pipe ensures that combustion air will be free of contaminants and supplied in proper volume.

When a sidewall or vertical rooftop combustion air supply system is disconnected for any reason, the air inlet pipe must be resealed to ensure that combustion air will be free of contaminants and supplied in proper volume.

⚠ DANGER Failure to properly seal all joints and seams as required in the air inlet piping may result in flue gas recirculation, spillage of flue products and carbon monoxide emissions causing severe personal injury or death.

3 General venting *(continued)*

Optional room air

NOTICE Optional room air is intended for commercial applications. Combustion air piping to the outside is recommended for residential applications.

Commercial applications utilizing the Epic Fire Tube may be installed with a single pipe carrying the flue products to the outside while using combustion air from the equipment room. In order to use the room air venting option the following conditions and considerations must be followed.

- The unit MUST be installed with the appropriate room air kit (Table 3C).
- The equipment room MUST be provided with properly sized openings to assure adequate combustion air. Please refer to instructions provided with the room air kit.
- There will be a noticeable increase in the noise level during normal operation from the inlet air opening.
- Using the room air kit makes the unit vulnerable to combustion air contamination from within the building. Please review Section 1, Prevent Combustion Air Contamination, to ensure proper installation.
- Vent system and terminations must comply with the standard venting instructions set forth in this manual.

⚠WARNING When utilizing the single pipe method, provisions for combustion and ventilation air must be in accordance with Air for Combustion and Ventilation, of the latest edition of the National Fuel Gas Code, ANSI Z223.1, in Canada, the latest edition of CGA Standard B149 Installation Code for Gas Burning Appliances and Equipment, or applicable provisions of the local building codes.

***Table 3C** Optional Room Air Kit*

Model	Kit Number	Air Size
80 - 150	100157614	2"
80 - 199	100157615	3"

Air contamination

Pool and laundry products and common household and hobby products often contain fluorine or chlorine compounds. When these chemicals pass through the boiler, they can form strong acids. The acid can eat through the boiler wall, causing serious damage and presenting a possible threat of flue gas spillage or boiler water leakage into the building.

Please read the information given in Table 1A, page 10, listing contaminants and areas likely to contain them. If contaminating chemicals will be present near the location of the boiler combustion air inlet, have your installer pipe the boiler combustion air and vent to another location, per this manual.

⚠WARNING If the boiler combustion air inlet is located in a laundry room or pool facility, for example, these areas will always contain hazardous contaminants.

⚠WARNING To prevent the potential of severe personal injury or death, check for areas and products listed in Table 1A, page 10 before installing the boiler or air inlet piping.

If contaminants are found, you MUST:

- Remove contaminants permanently.

—OR—

- Relocate air inlet and vent terminations to other areas.

3 General venting

PVC/CPVC:

This product has been approved for use with the PVC/CPVC vent materials listed in Table 3D.

Installing vent and air piping

⚠WARNING Use only the vent materials, primer, and cement specified in Table 3D to make the vent connections. Failure to follow this warning could result in fire, personal injury, or death.

NOTICE Use only cleaners, primers, and solvents that are approved for the materials which are joined together.

NOTICE All PVC vent pipes must be glued, properly supported, and the exhaust must be pitched a minimum of a 1/4 inch per foot back to the boiler (to allow drainage of condensate).

⚠CAUTION Allow for all primers, glues, and cements to fully cure before start-up. Failure to follow this warning could result in property damage and/or personal injury.

⚠WARNING Insulation should not be used on PVC or CPVC venting materials. The use of insulation will cause increased vent wall temperatures, which could result in vent pipe failure.

⚠WARNING For installations using 2" vent, the first seven (7) equivalent feet of vent must be CPVC (field supplied). **See examples below.**

⚠WARNING When transitioning from 2" to 3" vent diameter, a 2" pipe section and 2" to 3" increaser are required to be CPVC when PVC/CPVC vent is used.

Examples: 1. Seven (7) feet vertical
2. Connector + 90° elbow + 2 feet horizontal
3. One (1) foot vertical + 90° elbow + 1 foot horizontal

Table 3D PVC/CPVC Vent Pipe, and Fittings

Approved PVC/CPVC Vent Pipe and Fittings		
Item	**Material**	**Standard**
Vent pipe	PVC Schedule 40, 80	ANSI/ASTM D1785
	PVC - DWV	ANSI/ASTM D2665
	CPVC Schedule 40, 80	ANSI/ASTM F441
Vent fittings	PVC Schedule 40	ANSI/ASTM D2466
	PVC Schedule 80	ANSI/ASTM D2467
	CPVC Schedule 80	ANSI/ASTM F439
	PVC - DWV	ANSI/ASTM D2665
Pipe Cement / Primer	PVC	ANSI/ASTM D2564
	CPVC	ANSI/ASTM F493
NOTICE: DO NOT USE CELLULAR (FOAM) CORE PIPE		

NOTE: In Canada, CPVC and PVC vent pipe, fittings and cement/primer must be ULC-S636 certified.

1. Work from the boiler to vent or air termination. Do not exceed the lengths given in this manual for the air or vent piping.
2. Cut pipe to the required lengths and deburr the inside and outside of the pipe ends.
3. Chamfer outside of each pipe end to ensure even cement distribution when joining.
4. Clean all pipe ends and fittings using a clean dry rag. (Moisture will retard curing and dirt or grease will prevent adhesion.)
5. Dry fit vent or air piping to ensure proper fit up before assembling any joint. The pipe should go a third to two-thirds into the fitting to ensure proper sealing after cement is applied.
6. Priming and Cementing:
   a. Handle fittings and pipes carefully to prevent contamination of surfaces.
   b. Apply a liberal even coat of primer to the fitting socket and to the pipe end to approximately 1/2" beyond the socket depth.
   c. Apply a second primer coat to the fitting socket.
   d. While primer is still wet, apply an even coat of approved cement to the pipe equal to the depth of the fitting socket along with an even coat of approved cement to the fitting socket.
   e. Apply a second coat of cement to the pipe.
   f. While the cement is still wet, insert the pipe into the fitting, if possible twist the pipe a 1/4 turn as you insert it. **NOTE:** If voids are present, sufficient cement was not applied and joint could be defective.
   g. Wipe excess cement from the joint removing ring or beads as it will needlessly soften the pipe.

Figure 3-7 Near Boiler PVC/CPVC Venting

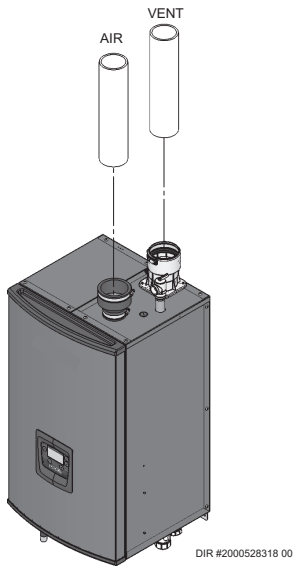

3 General venting *(continued)*

Polypropylene:

This product has been approved for use with polypropylene vent with the manufacturers listed in Table 3E.

All terminations must comply with listed options in this manual and be a single-wall vent offering.

For support and special connections required, see the manufacturer's instructions. All vent is to conform to standard diameter and equivalent length requirements established.

When determining equivalent combustion air and vent length for polypropylene single-wall piping:

Flexible polypropylene

For use of flex pipe, it is recommended to have the vent material in 32°F or higher ambient space before bending at installation. No bends should be made to greater than 45° and ONLY installed in vertical or near vertical installations (FIG. 3-8).

NOTICE The installer must use a specific vent starter adapter at the flue collar connection, supplied by the vent manufacturer to adapt to its vent system. See Table 3F for approved vent adapters.

NOTICE All vent connections MUST be secured by the vent manufacturer's joint connector (FIG. 3-9).

⚠WARNING Insulation should not be used on polypropylene venting materials. The use of insulation will cause increased vent wall temperatures, which could result in vent pipe failure.

⚠WARNING Use only the adapters and vent system listed in Tables 3E and 3F. DO NOT mix vent systems of different types or manufacturers, unless listed in this manual. Failure to comply could result in severe personal injury, death, or substantial property damage.

NOTICE Installations must comply with applicable national, state, and local codes. For Canadian installation, polypropylene vent must be listed as a ULC-S636 approved system.

NOTICE Installation of a polypropylene vent system should adhere to the vent manufacturer's installation instructions supplied with the vent system.

Figure 3-8 *Near Boiler Flexible Polypropylene Venting*

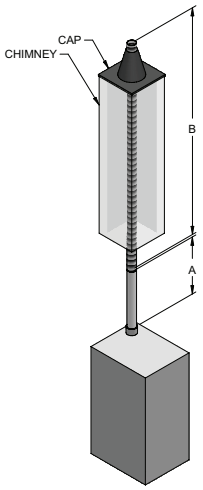

Duravent 3"

"A" DIM	"B" DIM	
3" RIGID	3" FLEX	4" FLEX
10 FT	60 FT	90 FT
20 FT	53 FT	80 FT
30 FT	47 FT	70 FT
40 FT	40 FT	60 FT
50 FT	33 FT	50 FT
60 FT	27 FT	40 FT
70 FT	20 FT	30 FT
80 FT	13 FT	20 FT
90 FT	7 FT	10 FT

Centrotherm 3"

"A" DIM	"B" DIM	
3" RIGID	3" FLEX	4" FLEX
10 FT	45 FT	90 FT
20 FT	40 FT	80 FT
30 FT	35 FT	70 FT
40 FT	30 FT	60 FT
50 FT	25 FT	50 FT
60 FT	20 FT	40 FT
70 FT	15 FT	30 FT
80 FT	10 FT	20 FT
90 FT	5 FT	10 FT

*NOTES: 1) FLEX PIPE MAY ONLY BE RUN IN A VERTICAL ORIENTATION
2) ALL VENT LENGTHS REPRESENTED IN ABOVE CHARTS ARE EQUIVALENT LENGTHS.
3) SECTION A IS EQUIVALENT FEET OF RIGID PIPE, WHICH MAY INCLUDE 45 AND 90° ELBOWS. PLEASE SEE SIZING SECTION FOR DETERMINING EQUIVALENT FEET.

IMG00840

Figure 3-9 *Near Boiler Polypropylene Venting Model 199*

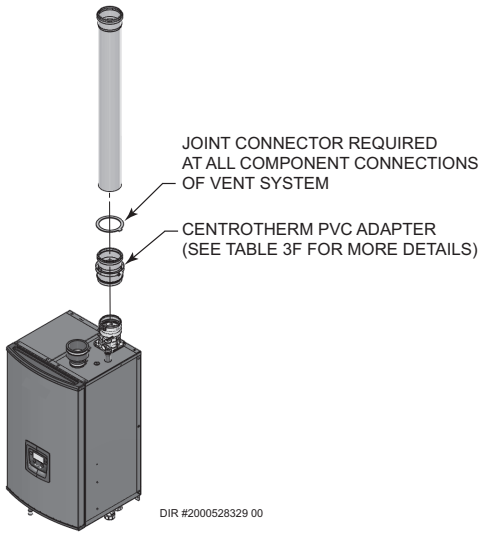

Table 3E *Polypropylene Vent Pipe and Fittings*

Approved Polypropylene Vent Manufacturers	
Make	**Model**
Centrotherm Eco Systems	InnoFlue SW/Flex
Duravent (M & G Group)	PolyPro Single-Wall / PolyPro Flex

Table 3F *Approved Polypropylene Terminations and Adapters*

Model	Centrotherm InnoFlue SW					Duravent Polypro	
	Polypropylene Adapter/ Flue Clamp	Joint Connector	Sidewall Kit*	Sidewall Retaining Bracket*	Sidewall Adapter*	Joint Connector	Sidewall Kit*
80 - 199	ISAG0303 w/IAFC03	IANS03	ISLPT0303	IATP0303	ISTAGL0303	3PPS-LB	3PPS-HLKL
* These parts are only needed if the alternate sidewall termination assembly is used.							

3 General venting

Stainless steel vent:

This product has been approved for use with stainless steel using the manufacturers listed in Table 3G.

⚠WARNING Use only the materials, vent systems, and terminations listed in Tables 3G and 3H. DO NOT mix vent systems of different types or manufacturers. Failure to comply could result in severe personal injury, death, or substantial property damage.

NOTICE The installer must use a specific vent starter adapter at the flue collar connection, supplied by the vent manufacturer to adapt to its vent system. See Table 3H for approved vent adapters.

NOTICE Installations must comply with applicable national, state, and local codes. Stainless steel vent systems must be listed as a UL-1738 approved system for the United States and a ULC-S636 approved system for Canada.

NOTICE Installation of a stainless steel vent system should adhere to the stainless steel vent manufacturer's installation instructions supplied with the vent system.

Figure 3-10 *Near Boiler Stainless Steel Venting*

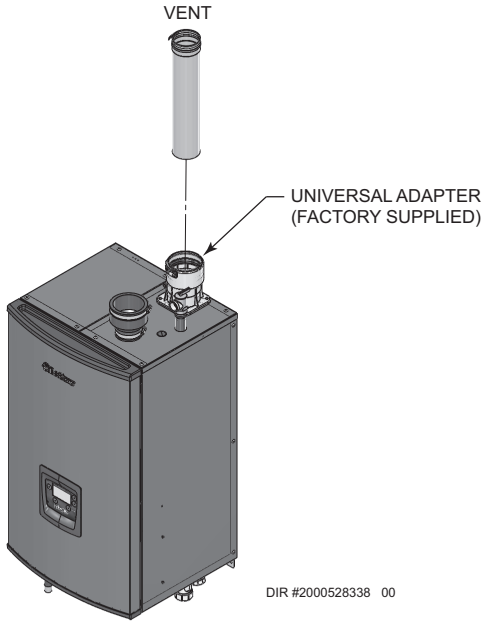

Table 3G *Stainless Steel Vent Pipe and Fittings*

Approved Stainless Steel Vent Manufacturers	
Make	**Model**
Dura Vent (M & G Group)	FasNSeal Vent / FasNSeal Flex* Vent
Z-Flex (Nova Flex Group)	Z-Vent
Heat Fab (Selkirk Corporation)	Saf-T Vent

*Use of FasNSeal Flex smooth inner wall vent is to be used in vertical or near vertical sections only, taking precaution to ensure no sagging occurs of the vent system. Connect to the FasNSeal rigid vent using specially designed adapters and sealing method, see manufacturer's instructions.

Table 3H *Approved Stainless Steel Terminations and Adapters*

Model	ProTech			Heat Fab			Z Flex		
	FasNSeal			Saf-T Vent			Z-Vent		
	**Boiler Adapter	Flue Termination	Intake Air Termination	*Boiler Adapter	Flue Termination	Intake Air Termination	**Boiler Adapter	Flue Termination	Intake Air Termination
80 - 199	300715 (Intake Air)	FSBS3 FSRC3(R.C)	303889	--	9392 5300CI	9314TERM	--	2SVSTP03 2SVSRCX03	2SVSTEX0390

*The stainless steel venting option is only available in 3" vent diameters.

4 Sidewall direct venting

Vent/air termination – sidewall

⚠WARNING Follow instructions below when determining vent location to avoid possibility of severe personal injury, death, or substantial property damage.

⚠WARNING A gas vent extending through an exterior wall shall not terminate adjacent to a wall or below building extensions such as eaves, parapets, balconies, or decks. Failure to comply could result in severe personal injury, death, or substantial property damage.

Determine location

Locate the vent/air terminations using the following guidelines:

1. The total length of piping for vent or air must not exceed the limits given in the General Venting Section on page 16 of this manual.
2. You must consider the surroundings when terminating the vent and air:
   a. Position the vent termination where vapors will not damage nearby shrubs, plants or air conditioning equipment or be objectionable.
   b. The flue products will form a noticeable plume as they condense in cold air. Avoid areas where the plume could obstruct window views.
   c. Prevailing winds could cause freezing of condensate and water/ice buildup where flue products impinge on building surfaces or plants.
   d. Avoid possibility of accidental contact of flue products with people or pets.
   e. Do not locate the terminations where wind eddies could affect performance or cause recirculation, such as inside building corners, near adjacent buildings or surfaces, window wells, stairwells, alcoves, courtyards, or other recessed areas.

Figure 4-1A *PVC/CPVC/Polypropylene Sidewall Termination of Air and Vent w/Field Supplied Fittings*

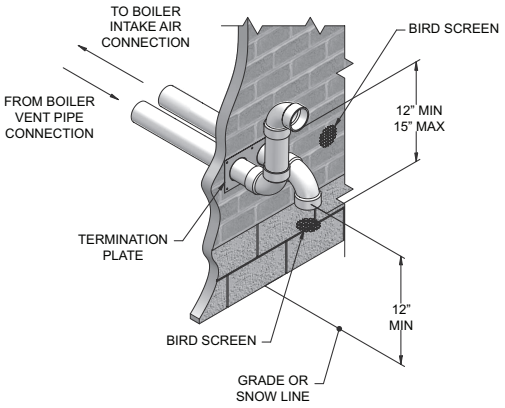

If using the sidewall termination:

3. The air piping must terminate in a down-turned elbow as shown in FIG. 4-1A. This arrangement avoids recirculation of flue products into the combustion air stream.
4. The vent piping must terminate in an elbow pointed outward or away from the air inlet, as shown in FIG. 4-1A.

⚠WARNING Do not exceed the maximum lengths of the outside vent piping shown in FIG. 4-1A. Excessive length exposed to the outside could cause freezing of condensate in the vent pipe, resulting in potential boiler shutdown.

When venting out a sidewall using PVC, CPVC, or Polypropylene vent materials, an optional sidewall vent termination kit can be ordered (reference Table 4A for kit numbers).

Table 4A *Alternate Sidewall Vent Kit*

Model	Kit Number	Air Size	Vent Size	Centerline Width
80 - 150	100157609	2"	2"	5 5/8"
80 - 199	100157610	3"	3"	5 5/8"

Figure 4-1B *Alternate PVC/CPVC/ Polypropylene Sidewall Termination of Air and Vent*

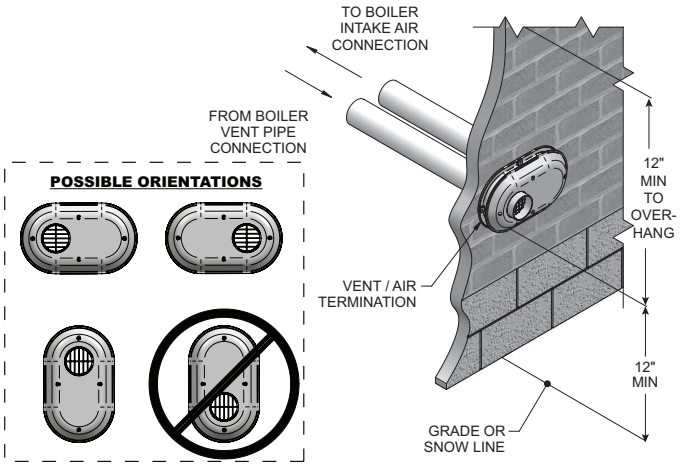

4 Sidewall direct venting

Vent/air termination – sidewall

Figure 4-1C *Alternate Venting Arrangement (if Space Allows) w/Field Supplied Fittings*

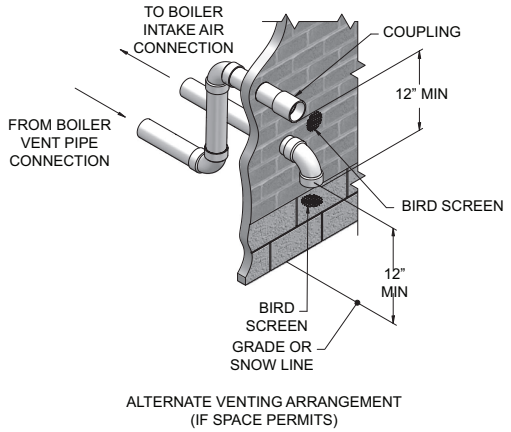

Figure 4-1D *Alternate Venting Arrangement - Typical Stainless Steel Sidewall Termination of Air and Vent w/ Field Supplied Fittings*

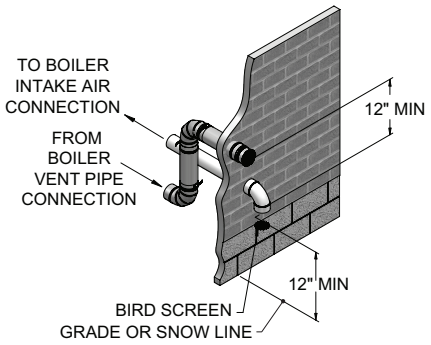

5. Maintain clearances as shown in FIG.'s 4-1A thru 4-3B, pages 21 and 22. Also maintain the following:
   a. Vent must terminate:
      - At least 6 feet from adjacent walls.
      - No closer than 12 inches below roof overhang.
      - At least 7 feet above any public walkway.
      - At least 3 feet above any forced air intake within 10 feet.
      - No closer than 12 inches below or horizontally from any door or window or any other gravity air inlet.
   b. Air inlet must terminate at least 12 inches above grade or snow line; at least 12 inches below the vent termination (FIG. 4-1B); and the vent pipe must not extend more than 24 inches vertically outside the building.
   c. Do not terminate closer than 4 feet horizontally from any electric meter, gas meter, regulator, relief valve, or other equipment. Never terminate above or below any of these within 4 feet horizontally.
6. Locate terminations so they are not likely to be damaged by foreign objects, such as stones or balls, or subject to buildup of leaves or sediment.

Figure 4-2A *Clearance to Gravity Air Inlets w/Field Supplied Fittings*

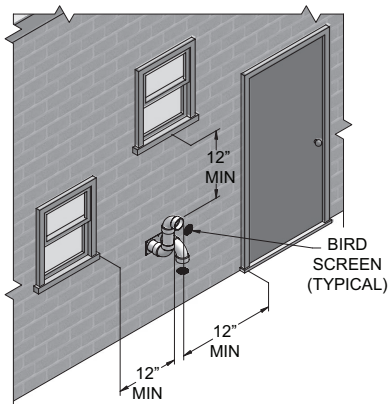

Figure 4-2B *Clearance to Gravity Air Inlets using an Optional Vent Kit*

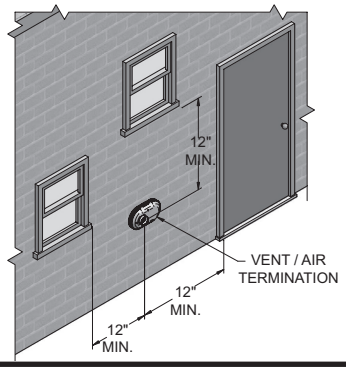

Figure 4-3A *Clearance to Forced Air Inlets using an Optional Vent Kit*

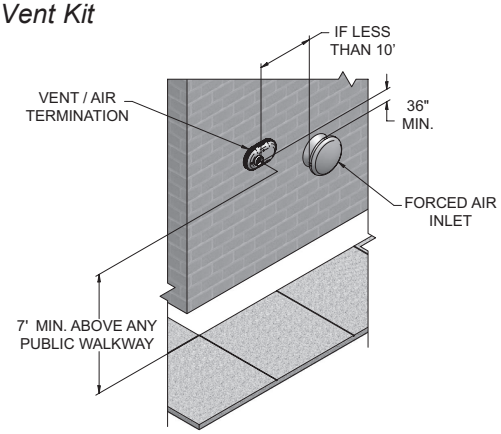

Figure 4-3B *Clearance to Forced Air Inlets w/Field Supplied Fittings*

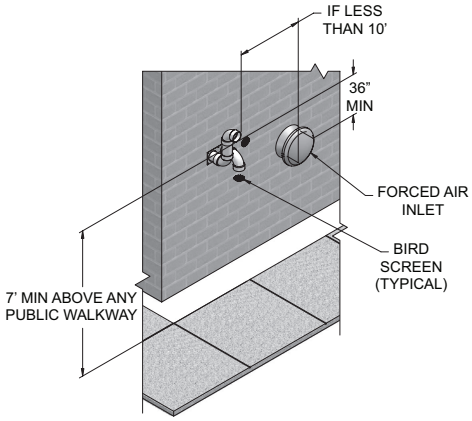

4 Sidewall direct venting *(continued)*

Prepare wall penetrations

1. Air pipe penetration:
   a. Cut a hole for the air pipe. Size the air pipe hole as close as desired to the air pipe outside diameter.
2. Vent pipe penetration:
   a. Cut a hole for the vent pipe. For either combustible or noncombustible construction, size the vent pipe hole with at least a 1/2 inch clearance around the vent pipe outer diameter:
      • 3½ inch hole for 2 inch vent pipe
      • 4½ inch hole for 3 inch vent pipe
   b. Insert a galvanized metal thimble in the vent pipe hole as shown in FIG. 4-4A.
3. Use the sidewall termination plate as a template for correct location of hole centers.
4. Follow all local codes for isolation of vent pipe when passing through floors or walls.
5. Seal exterior openings thoroughly with exterior caulk.

Figure 4-4A *Sidewall Termination Assembly w/Field Supplied Fittings*

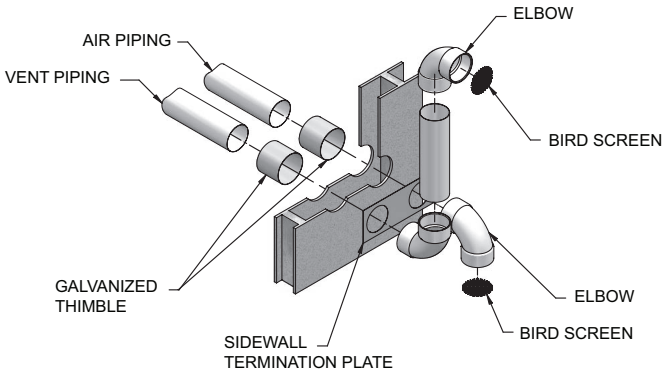

Multiple vent/air terminations

1. When terminating multiple boilers terminate each vent/air connection as described in this manual (FIG. 4-5A).

⚠WARNING All vent pipes and air inlets must terminate at the same height to avoid possibility of severe personal injury, death, or substantial property damage.

2. Place wall penetrations to obtain minimum clearance of 12 inches between edge of air inlet and adjacent vent outlet, as shown in FIG. 4-5A for U.S. installations. For Canadian installations, provide clearances required by CSA B149.1 Installation Code.
3. The air inlet of an Epic Fire Tube is part of a direct vent connection. It is not classified as a forced air intake with regard to spacing from adjacent boiler vents.

Figure 4-5A *Multiple Vent Terminations w/Field Supplied Fittings (must also comply with* ***Figure 4-1A****)*

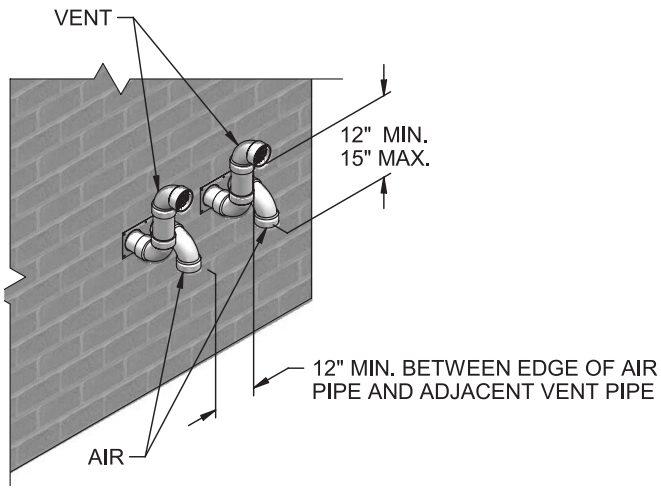

Figure 4-5B *Alternate Multiple Vent Terminations (must also comply with* ***Figure 4-1B****)*

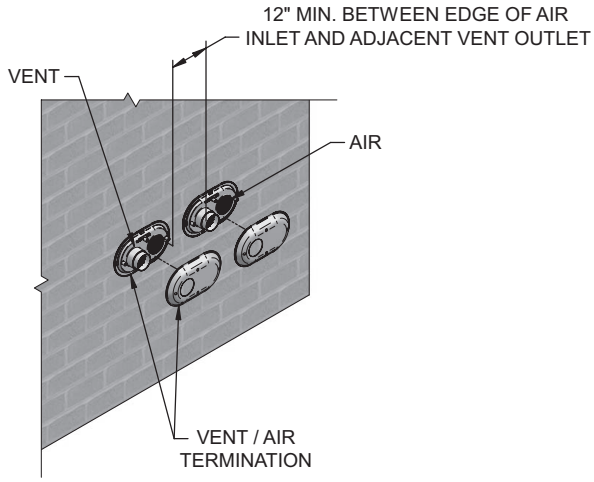

4 Sidewall direct venting

Sidewall termination – optional concentric vent

Description and usage

The manufacturer offers optional concentric combustion air and vent pipe termination kits (Factory Kit #100140480 - 3" or #100140485 - 2"). Both combustion air and vent pipes must attach to the termination kit. The termination kit must terminate outside the structure and must be installed as shown below in FIG. 4-6.

The required combustion vent pipe and fittings are listed in Table 3B, on page 16 of this manual.

Figure 4-6 *Concentric Sidewall Termination*

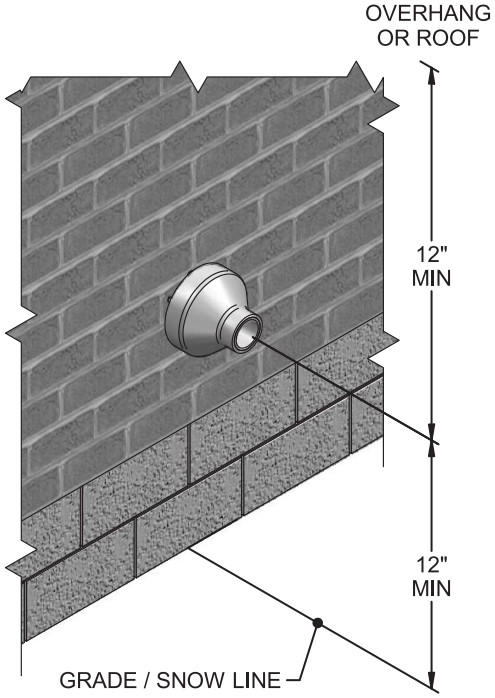

Sidewall termination installation

1. Determine the best location for the termination kit (see FIG. 4-6).
2. Reference the *Determine Location Section* on page 21 of this manual for general termination considerations.
3. Cut one (1) hole (5 inch diameter for #100140480 installations or 4 inch diameter for #100140485 installations) into the structure to install the termination kit.
4. Partially assemble the concentric vent termination kit. Clean and cement using the procedures found in these instructions.
   a. Cement the Y concentric fitting to the larger kit pipe (FIG. 4-7).
   b. Cement the rain cap to the smaller diameter kit pipe (FIG. 4-7).

Figure 4-7 *Kit Contents*

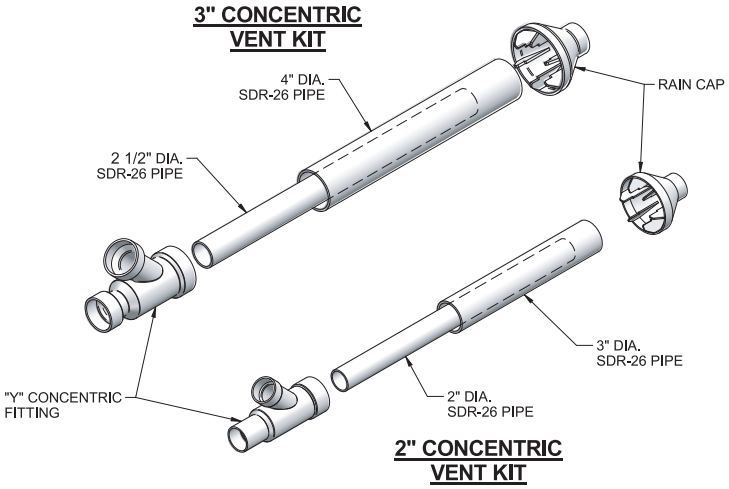

Table 4B *Alternate Centrotherm Concentric Vent Terminations*

Roof Terminations	
Size	**Part No.**
2"	ICRT2435
3"	ICRT3539
Wall Terminations	
Size	**Part No.**
2"	ICWT242
3"	ICWT352

4 Sidewall direct venting *(continued)*

Sidewall termination – optional concentric vent models

Figure 4-8 *Concentric Vent Dimensional Drawing*

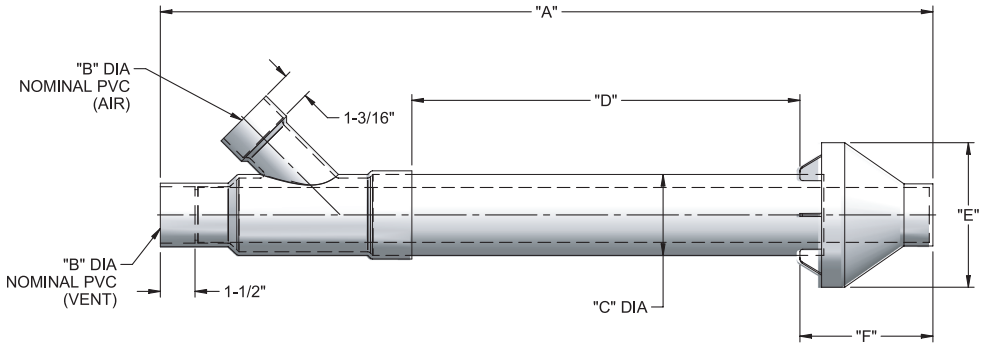

	"A"	"B"	"C"	"D"	"E"	"F"
2" VENT KIT	33-3/8"	2"	3-1/2"	16-5/8"	6-1/4"	5-3/4"
3" VENT KIT	38-7/8"	3"	4-1/2"	21-1/8"	7-3/8"	6-1/2"

NOTICE Instead of cementing the smaller pipe to the rain cap, a field-supplied stainless steel screw may be used to secure the two (2) components together when field disassembly is desired for cleaning (see FIG. 4-9).

⚠WARNING When using the alternate screw assembly method, drill a clearance hole in the rain cap and a pilot hole in the vent pipe for the screw size being used. Failure to drill adequate holes may cause cracking of PVC components, allowing combustion products to be recirculated. Failure to follow this warning could result in personal injury or death.

⚠WARNING Do not operate the appliance with the rain cap removed or recirculation of combustion products may occur. Water may also collect inside the larger combustion air pipe and flow to the burner enclosure. Failure to follow this warning could result in product damage or improper operation, personal injury, or death.

Figure 4-9 *Rain Cap to Vent Pipe Alternate Assembly*

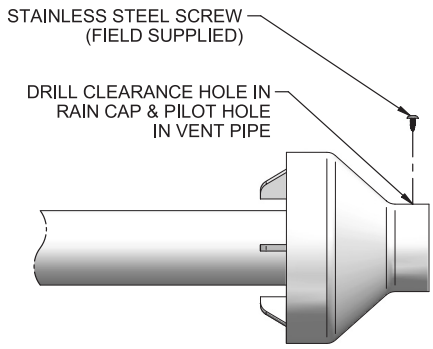

5. Install the Y concentric fitting and pipe assembly through the structure's hole.

NOTICE Do not allow insulation or other materials to accumulate inside the pipe assembly when installing through the hole.

6. Install the rain cap and small diameter pipe assembly into the Y concentric fitting and large pipe assembly. Ensure small diameter pipe is bottomed and cemented in the Y concentric fitting.

7. Secure the assembly to the structure as shown in FIG. 4-10 using field-supplied metal strapping or equivalent support material.

NOTICE Ensure termination location clearance dimensions are as shown in FIG. 4-6.

NOTICE If assembly needs to be extended to allow sidewall thickness requirement, the two (2) pipes supplied in the kit may be replaced by using the same diameter, field-supplied SDR-26 PVC (D2241) pipe. Do not extend dimension D more than 60 inches (see FIG. 4-8).

NOTICE If assembly needs to be reduced, dimension D can be as short as possible.

4 Sidewall direct venting

Sidewall termination – optional concentric vent

Figure 4-10 *Concentric Vent Sidewall Attachment*

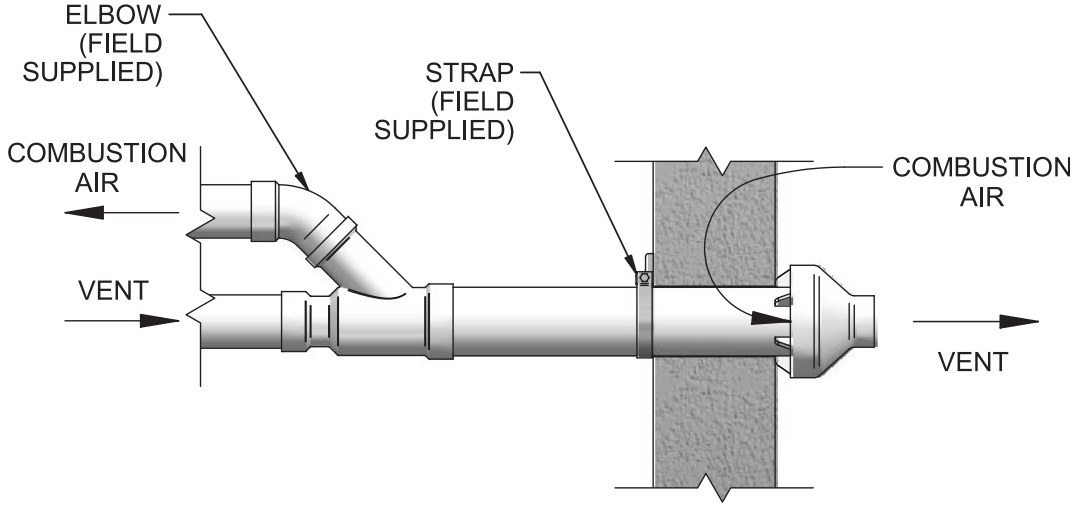

CAUTION DO NOT use field-supplied couplings to extend pipes. Airflow restriction will occur and may cause intermittent operation.

8. Cement appliance combustion air and vent pipes to the concentric vent termination assembly. See FIG. 4-10 for proper pipe attachment.

9. Operate the appliance one (1) heat cycle to ensure combustion air and vent pipes are properly connected to the concentric vent termination connections.

Multiventing sidewall terminations

When two (2) or more direct vent appliances are vented near each other, each appliance must be individually vented (see FIG. 4-11). NEVER common vent or breach vent this appliance. When two (2) or more direct vent appliances are vented near each other, two (2) vent terminations may be installed as shown in FIG. 4-11. It is important that vent terminations be made as shown to avoid recirculation of flue gases.

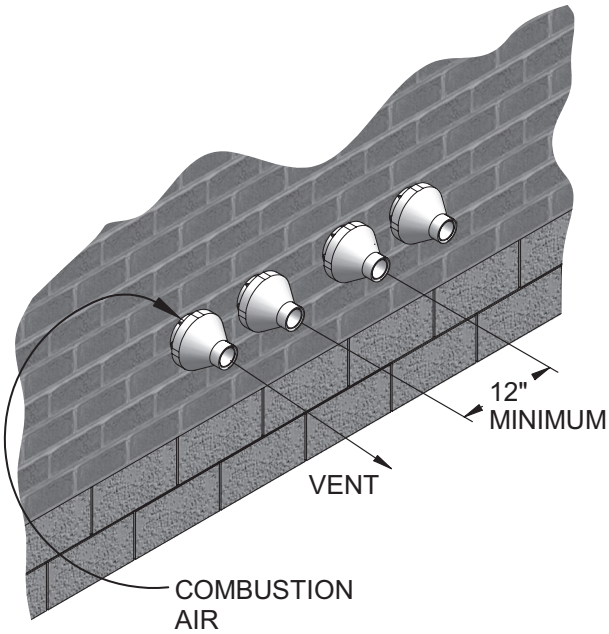

Figure 4-11 *Concentric Vent and Combustion Air Termination*

5 Vertical direct venting

Vent/air termination – vertical

⚠WARNING Follow instructions below when determining vent location to avoid possibility of severe personal injury, death or substantial property damage.

Determine location

Locate the vent/air terminations using the following guidelines:

1. The total length of piping for vent or air must not exceed the limits given in the General Venting Section on page 16 of this manual.

2. Prepare the vent termination and the air termination elbow (FIG. 5-1A) by inserting bird screens.

3. The vent must terminate at least 3 feet above the highest place in which the vent penetrates the roof and at least 2 feet above any part of a building within 10 horizontal feet.

4. The air piping must terminate in a down-turned 180° return pipe no further than 2 feet from the center of the vent pipe. This placement avoids recirculation of flue products into the combustion air stream.

5. The vent piping must terminate in an up-turned coupling as shown in FIG. 5-1A. The top of the coupling must be at least 1 foot above the air intake. When the vent termination uses a rain cap as illustrated in FIG. 5-1B maintain at least 36" (914 mm) above the air inlet. The air inlet pipe and vent pipe can be located in any desired position on the roof, but must always be no further than 2 feet (.6 m) apart and with the vent termination at least 1 foot for PVC and 3 feet for stainless steel, above the air intake.

6. Maintain the required dimensions of the finished termination piping as shown in FIG. 5-1A.

7. Do not extend exposed vent pipe outside of building more than shown in this document. Condensate could freeze and block vent pipe.

⚠WARNING Rooftop vent and air inlet terminations must terminate in the same pressure zone, unless vertical vent sidewall air is set up, reference this section, page 28 and Section 4 - Air Intake Clearances.

***Figure 5-1A** PVC/CPVC/Polypropylene Vertical Termination of Air and Vent*

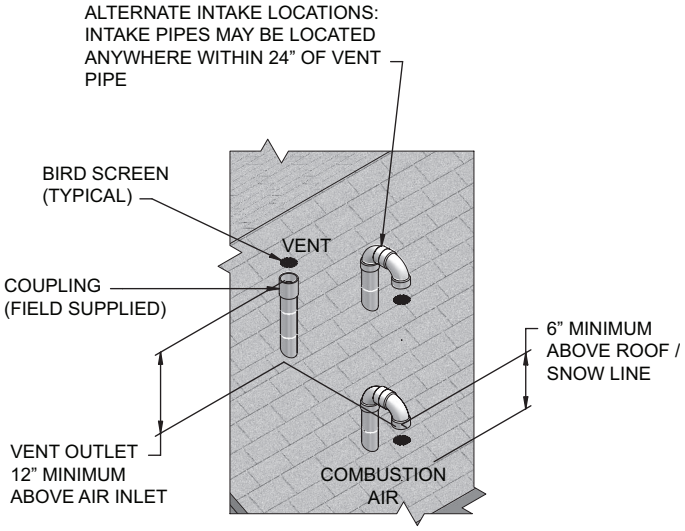

***Figure 5-1B** Stainless Steel Vertical Termination of Air and Vent*

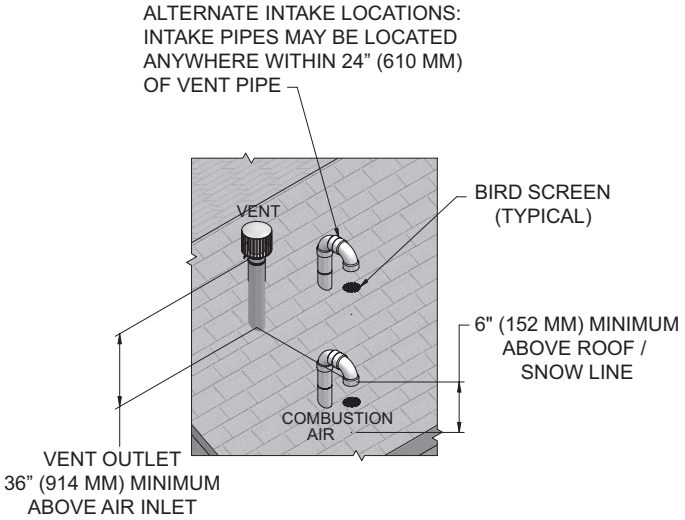

8. Locate terminations so they are not likely to be damaged by foreign objects, such as stones or balls, or subject to buildup of leaves or sediment.

5 Vertical direct venting

Vent/air termination – vertical

Prepare roof penetrations

1. Air pipe penetration:
   a. Cut a hole for the air pipe. Size the air pipe hole as close as desired to the air pipe outside diameter.

2. Vent pipe penetration:
   a. Cut a hole for the vent pipe. For either combustible or noncombustible construction, size the vent pipe hole with at least a 1/2 inch clearance around the vent pipe outer diameter:
      • 3½ inch hole for 2 inch vent pipe
      • 4½ inch hole for 3 inch vent pipe
   b. Insert a galvanized metal thimble in the vent pipe hole.

3. Space the air and vent holes to provide the minimum spacing shown in FIG. 5-1A, page 27.

4. Follow all local codes for isolation of vent pipe when passing through floors, ceilings, and roofs.

5. Provide flashing and sealing boots sized for the vent pipe and air pipe.

Multiple vent/air terminations

1. When terminating multiple boilers, terminate each vent/air connection as described in this manual (FIG. 5-2).

⚠WARNING Terminate all vent pipes at the same height and all air pipes at the same height to avoid possibility of severe personal injury, death, or substantial property damage.

2. Place roof penetrations to obtain minimum clearance of 12 inches between edge of air intake elbow and adjacent vent pipe of another boiler for U.S. installations (see FIG. 5-2). For Canadian installations, provide clearances required by CSA B149.1 Installation Code.

3. The air inlet of an Epic Fire Tube is part of a direct vent connection. It is not classified as a forced air intake with regard to spacing from adjacent boiler vents.

Figure 5-2 *Vertical Terminations with Multiple Boilers*

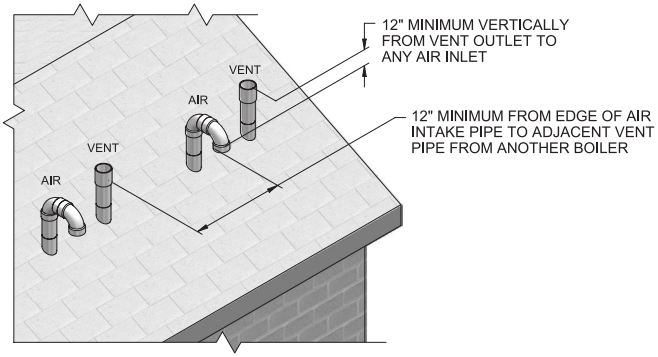

Figure 5-3 *Alternate Vertical Terminations with Multiple Boilers*

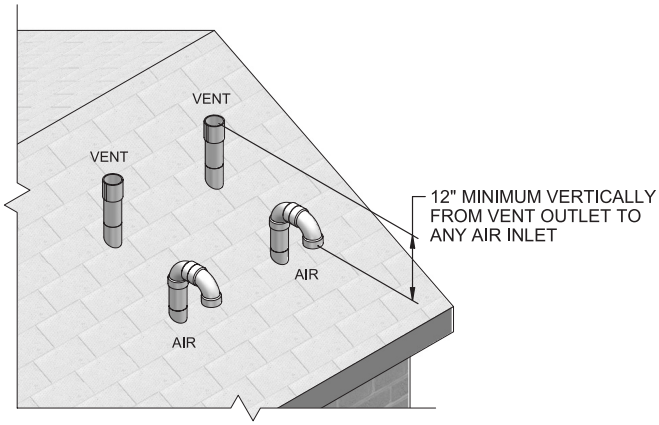

5 Vertical direct venting *(continued)*

Vertical termination – optional concentric vent

Description and usage

The manufacturer offers an optional concentric combustion air and vent pipe termination kit. Both combustion air and vent pipes must attach to the termination kit. The termination kit must terminate outside the structure and must be installed as shown in FIG. 5-4.

Field supplied pipe and fittings are required to complete the installation.

The required combustion air and vent pipe fittings are listed in Table 3B, on page 16 of this manual.

Vertical termination installation

1. See Section 5, Vertical Direct Venting - Determine Location (where applicable).

Figure 5-4 *Concentric Vertical Termination*

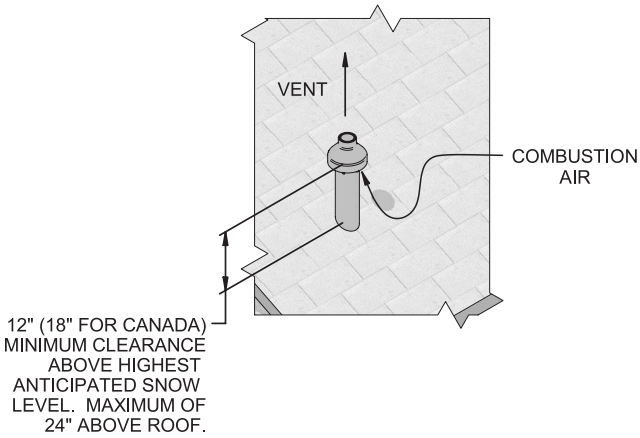

Figure 5-5 *Do Not Install U-Bend to Rain Cap*

2. Cut one (1) hole (5 inch diameter for #100140480 installations or 4 inch diameter for #100140485 installations) into the structure to install the termination kit.

3. Partially assemble the concentric vent termination kit. Clean and cement following the cleaning procedures in these instructions.
   a. Cement the Y concentric fitting to the larger diameter kit pipe (see FIG. 4-7, page 24).
   b. Cement rain cap to the smaller diameter kit pipe (see FIG. 4-7, page 24).

NOTICE Instead of cementing the smaller pipe to the rain cap, a field supplied stainless steel screw may be used to secure the two (2) components together when field disassembly is desired for cleaning (see FIG. 4-9, page 25).

⚠ WARNING When using the alternate screw assembly method, drill a clearance hole in the rain cap and a pilot hole in the vent pipe for the screw size being used. Failure to drill adequate holes may cause cracking of PVC components, allowing combustion products to be recirculated. Failure to follow this warning could result in personal injury or death.

5 Vertical direct venting

Vertical termination – optional concentric vent

⚠WARNING Do not operate the appliance with the rain cap removed or recirculation of combustion products may occur. Water may also collect inside the larger combustion air pipe and flow to the burner enclosure. Failure to follow this warning could result in product damage or improper operation, personal injury, or death.

4. Install the Y concentric fitting pipe assembly through the structure's hole and field supplied roof boot/flashing.

NOTICE Do not allow insulation or other materials to accumulate inside the pipe assembly when installing through the hole.

5. Secure the assembly to the roof structure as shown below in FIG. 5-6 using field supplied metal strapping or equivalent support material.

Figure 5-6 *Concentric Vent Roof Installation*

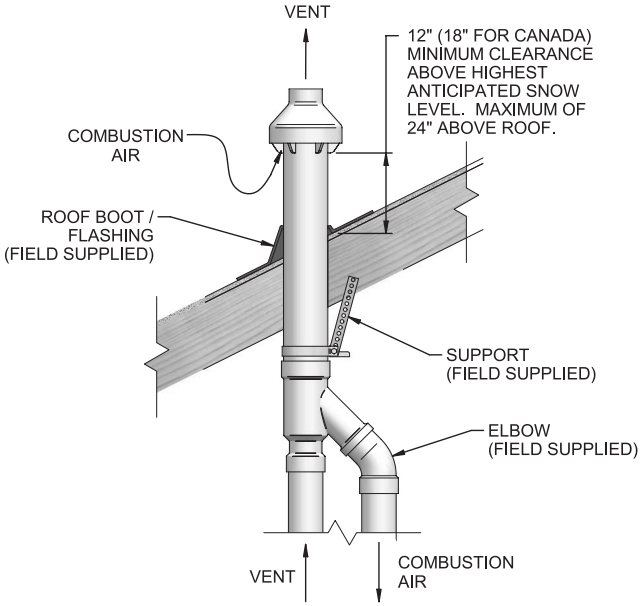

NOTICE Ensure termination height is above the roof surface or anticipated snow level (12 inches in U.S.A. or 18 inches in Canada) as shown in FIG. 5-4, page 29.

NOTICE If assembly is too short to meet height requirement, the two (2) pipes supplied in the kit may be replaced by using the same diameter, field supplied SDR-26 PVC (D2241) pipe. Do not extend dimension D more than 60 inches (see FIG. 4-8, page 25).

CAUTION DO NOT use field-supplied couplings to extend pipes. Airflow restriction will occur.

6. Install the rain cap and the small diameter pipe assembly into the roof penetration assembly. Ensure the small diameter pipe is cemented and bottomed in the Y concentric fitting.

7. Cement the appliance combustion air and vent pipes to the concentric vent termination assembly. See FIG. 5-6 for proper pipe attachment.

8. Operate the appliance through one (1) heat cycle to ensure combustion air and vent pipes are properly connected to the concentric vent termination connections.

Multi-venting vertical terminations

When two (2) or more direct vent appliances are vented near each other, each appliance must be individually vented (see FIG. 5-7). NEVER common vent or breach vent this appliance. When two (2) or more direct vent appliances are vented near each other, two (2) vent terminations may be installed as shown in FIG. 5-7. It is important that vent terminations be made as shown to avoid recirculation of flue gases.

Figure 5-7 *Concentric Vent and Combustion Air Vertical Termination*

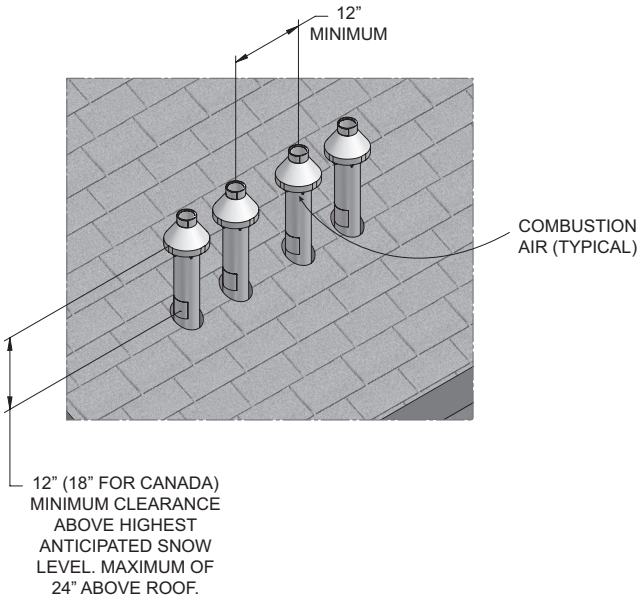

5 Vertical direct venting *(continued)*

Alternate vertical concentric venting

This appliance may be installed with a concentric vent arrangement where the vent pipe is routed through an existing unused venting system; or by using the existing unused venting system as a chase for vent and combustion air routing.

Concentric Venting Arrangement

The venting is to be vertical through the roof. The annular space between the O.D. of the vent pipe and the I.D. of the existing unused venting system is utilized for the combustion air source.

The minimum size of the existing vent system required to achieve enough annular space for combustion air can be found in Table 5A below.

The upper and lower termination as well as any other unsealed joints in the existing vent system **must be** sealed to ensure that all combustion air is drawn from under the vent cap as shown in FIG.'s 5-8 and 5-9.

Approved venting materials must be used as specified in Table 3D on page 18.

Follow all vent / air termination and clearance requirements per this section to the appropriate example. Installation must comply with local requirements and with the National Fuel Gas Code.

The maximum allowable equivalent vent and air intake lengths for this venting arrangement are to be determined from the General Venting Section.

If an existing unused venting system is converted for use with this method of concentric venting, the installer must ensure that the existing venting system is clean and free from particulate contamination that will harm this appliance and cause increased nuisance calls or maintenance. See Table 1A on page 10 for a list of corrosive contaminants and sources.

Two example scenarios of a concentric venting arrangement are shown for illustrative purposes in FIG.'s 5-8 and 5-9.

Table 5A *Alternate Vertical Concentric Vent / Chase Sizes*

Model	Vent / Air Inlet Size	Minimum Existing Vent / Chase Size
80 - 150	2"	4"
80 - 199	3"	5"

Figure 5-8 *Concentric Vent Example 1*

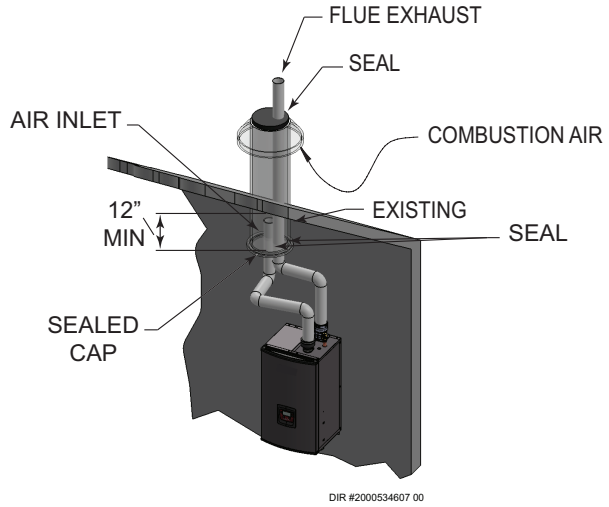

*For concept illustration only. Individual installations may vary due to job site specific equipment.

Figure 5-9 *Concentric Vent Example 2*

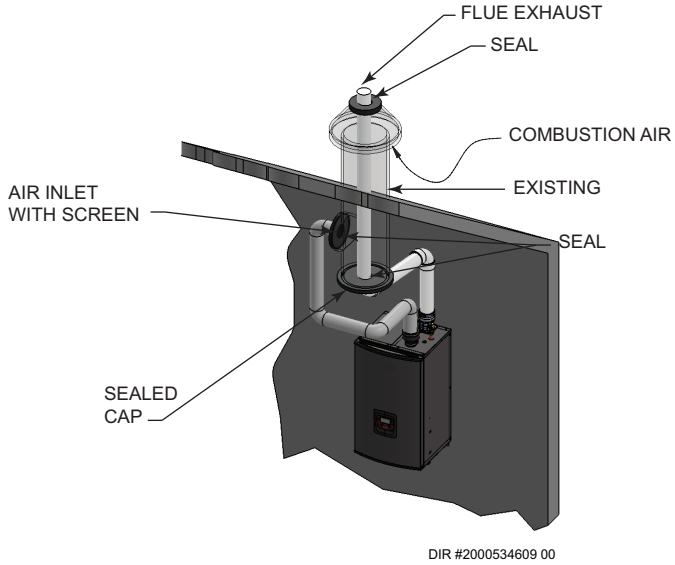

*For concept illustration only. Individual installations may vary due to job site specific equipment.

5 Vertical direct venting

Existing vent as a chase

Follow all existing termination and clearance requirements and allowable pipe lengths. Use only approved venting materials listed in the General Venting Section of this manual.

Figure 5-10 *Existing Vent as a Chase*

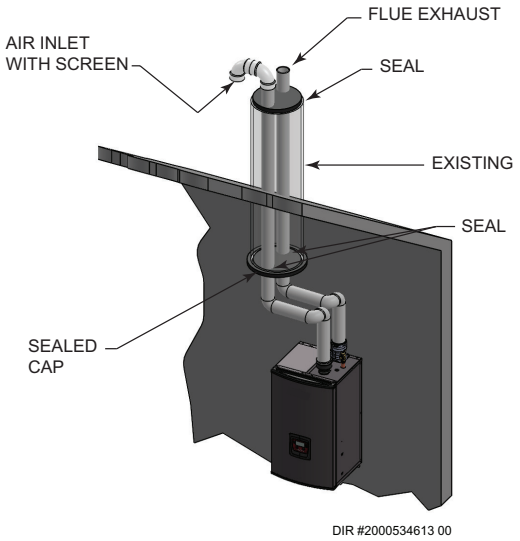

*For concept illustration only. Individual installations may vary due to job site specific equipment.

6A Hydronic piping

System water piping methods

The Epic Fire Tube is designed to function in a closed loop pressurized system not less than 12 psi (Non-metallic system piping must have an oxygen barrier to be considered a closed loop). A temperature and pressure gauge is included to monitor system pressure and outlet temperature and should be located on the boiler outlet.

For boiler only models, it is important to note that the boiler has a minimal amount of pressure drop and must be figured in when sizing circulators.

Each installation must have an air elimination device, which will remove air from the system. Install the boiler so the gas ignition system components are protected from water (dripping, spraying, etc.) during appliance operation for basic service of circulator replacement, valves, and others.

Observe a minimum of a 1/4 inch clearance around all un-insulated hot water pipes when openings around the pipes are not protected by non-combustible materials.

Low water cutoff device

On a boiler installed above radiation level, some states and local codes require a low water cutoff device at the time of installation.

Chilled water system

If the boiler supplies hot water to heating coils in air handler units, flow control valves or other devices must be installed to prevent gravity circulation of heater water in the coils during the cooling cycle. A chilled water medium must be piped in parallel with the heater.

Freeze protection fluids

Freeze protection fluids for new or existing systems must use glycol that is specially formulated for this purpose. This includes inhibitors, which prevent the glycol from attacking the metallic system components. Make certain to check that the system fluid is correct for the glycol concentration and inhibitor level. The system should be tested at least once a year and as recommended by the producer of the glycol solution. Allowance should be made for the expansion of the glycol solution in the system piping.

⚠ WARNING Use only inhibited propylene glycol solutions, which are specifically formulated for hydronic systems. Ethylene glycol is toxic and can attack gaskets and seals used in hydronic systems.

Heating fluid and Domestic Hot Water (DHW) piping (Combi only)

The diameter of the heating fluid (hot boiler water) and for combi models only, DHW piping will depend on the model number and size of the water heater being installed.

General piping information

IMPORTANT All boiler piping must contain an oxygen barrier. This will help prevent any excess oxygen from entering the system.

Basic steps are listed below along with illustrations on the following pages (FIG.'s 6-2 through 6-10), which will guide you through the installation of the Epic Fire Tube.

1. Connect the system return marked "Boiler Inlet".
2. Connect the system supply marked "Boiler Outlet".
3. Install purge and balance valve or shutoff valve and drain on system return to purge air out of each zone.
4. Install a backflow preventer on the cold feed make-up water line.
5. Install a pressure reducing valve on the cold feed make-up water line, (15 psi nominal). Check temperature and pressure gauge (shipped separately), which should read a minimum pressure of 12 psi.

   For boiler models only, install a circulator as shown in the piping diagrams on the following pages in this section. Make sure the circulator is properly sized for the system and friction loss.
6. Install a system pump if necessary as shown on the piping diagrams in this section. Make sure the circulator is properly sized for the system and friction loss.
7. Install an expansion tank on the system supply. Consult the tank manufacturer's instruction for specific information relating to tank installation. Size the expansion tank for the required system volume and capacity.
8. Install an air elimination device on the system supply.
9. Install a drain valve at the lowest point of the system. **Note:** The boiler cannot be drained completely of water without purging the unit with an air pressure of 15 psi.
10. This appliance is supplied with a relief valve sized in accordance with ASME Boiler and Pressure Vessel Code, Section IV ("Heating Boilers"). Pipe the discharge of the safety relief valve to prevent injury in the event of pressure relief. Pipe the discharge to a drain. Provide piping that is the same size as the safety relief valve outlet. Never block the outlet of the safety relief valve.
11. Install a field supplied strainer to prevent damage to the heat exchanger caused by debris entering from the system piping. When installing in a pre-existing system, a strainer/filter capable of removing debris left in the system is recommended.

See the *piping illustrations included in this section, FIG.'s 6-2 through 6-10 for suggested guidelines in piping the Epic Fire Tube with either zone valves or circulator pumps.

NOTICE *Please note that these illustrations are meant to show system piping concept only, the installer is responsible for all equipment and detailing required by local codes.

6A Hydronic piping

Near boiler piping components

1. **Boiler system piping:**
   Boiler system piping MUST be sized per the pipe requirements listed in Table 6A. Reducing the pipe size can restrict the flow rate through the boiler, causing inadvertent high limit shutdowns and poor system performance.

2. **Boiler circulating pump:**
   On Combi units only, an integral boiler circulating pump is supplied by the factory. System piping must be sized to meet the minimum requirements in Table 6A on page 35.

   For boiler only models, a field supplied boiler circulating pump must be installed. This circulator must be sized to meet the specified minimum flow requirements listed in Table 6B on page 40.

3. **Boiler isolation valves:**
   Field supplied. Full port ball valves are required. Failure to use full port ball valves could result in a restricted flow rate through the boiler.

4. **Check valves:**
   Field supplied. Check valves are recommended for installation as shown in FIG.'s 6-2 through 6-4 and 6-7 through 6-9. Failure to install check valves could result in a reverse flow condition during pump(s) off cycle.

5. **Unions:**
   Field supplied. Recommended for unit serviceability.

6. **Temperature and pressure gauge:**
   Factory supplied. The temperature and pressure gauge is shipped loose. It is the responsibility of the contractor to install the temperature and pressure gauge on the boiler water outlet.

7. **Pressure relief valve:**
   Factory supplied. The pressure relief valve is sized to ASME specifications. Install the 3/4" NPT fitting on the top right side of the boiler (images in this manual show relief valve installed).

8. **Boiler purge valve:**
   Field supplied. The boiler purge valve is used to remove entrapped air from the heat exchanger during start-up.

9. **System temperature sensor (optional):**
   Factory supplied with the unit. The manufacturer offers a system temperature sensor (100157718). The sensor is to be installed in the heating loop downstream from the boiler hot water piping and heating loop junction. Typically the sensor will be located far enough downstream to sense system diluted water temperature.

⚠WARNING The National Standard Plumbing Code, the National Plumbing Code of Canada and the Uniform Plumbing Code limit the pressure of the heat transfer fluid to less than the minimum working pressure of the potable water system up to 30 psi maximum. Also, the heat transfer fluid must be water or other non-toxic fluid having a toxicity of Class 1, as listed in Clinical Toxicology of Commercial Products, 5th Edition.

10. **Water Meter:**
    Field supplied. A water meter to monitor makeup water is recommended. Makeup water volume should not exceed 5% of total system per year.

11. **Indirect water heater (Boiler Only):**
    The Epic Fire Tube may be piped to an indirect water heater to heat domestic hot water with the space heat transfer medium.

    The space heating piping will branch off to flow the space heat transfer medium through a single wall heat exchanger coil inside the indirect water heater.

    The indirect water heater is connected to the boiler supply/return piping. A pump controlled by the Epic Fire Tube's control will regulate the flow of water through the indirect water heater. The indirect water heater's temperature will be regulated by the Epic boiler's control or through a field supplied Aquastat.

    The Epic Fire Tube is pre-configured to control the operation of the DHW pump with Domestic Hot Water Prioritization programming. The DHW programming is designed to control and balance the space heating demand by switching between DHW and space heating.

    Lochinvar offers the Squire which is a series of indirect water heaters. The Squire features a stainless steel vessel with a single wall stainless steel heat exchanger.

12. **Y-Strainer:**
    Field supplied. A Y-strainer or equivalent multipurpose strainer is recommended at the inlet of the heat exchanger to remove system particles from older hydronic systems and protect newer systems.

6A Hydronic piping *(continued)*

Figure 6-1 *Pressure Drop vs. Flow_**COMBI ONLY***

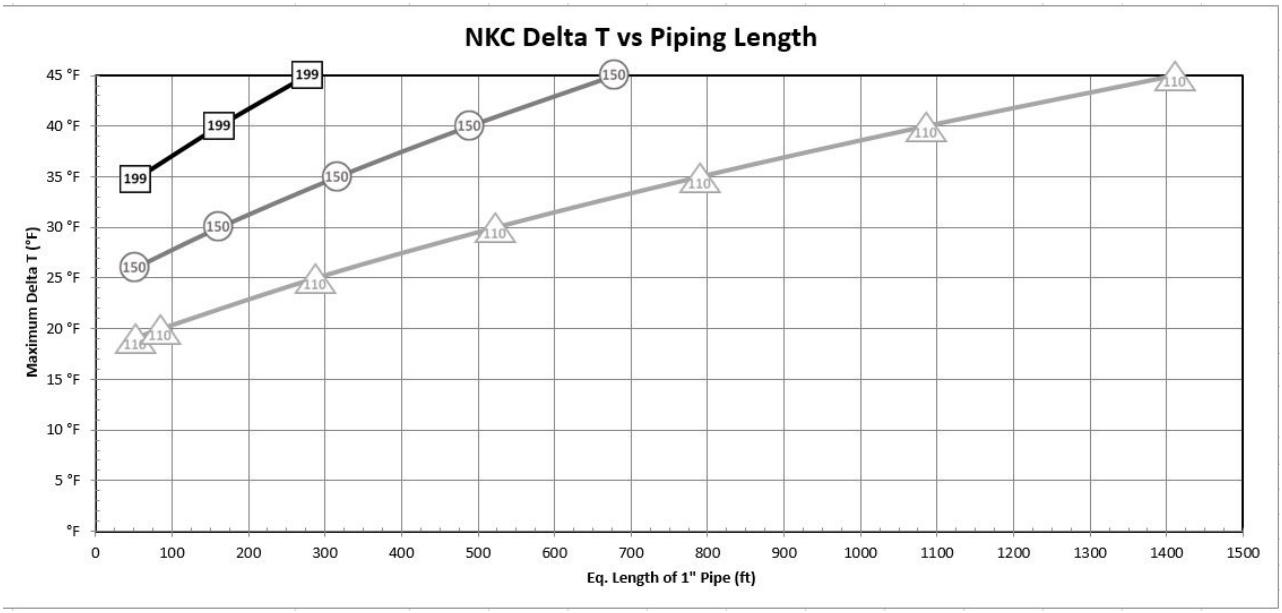

Table 6A *Temperature Rise Applications_Combi Only*

EPC/EFC110			
Delta T	**GPM**	**FT/HD**	**Eq Ft of 1" Pipe**
19.1°F	**10.6**	**4.0**	**53**
20°F	10.1	6.0	85
25°F	8.1	13.4	287
30°F	6.7	17.4	523
35°F	5.8	19.9	789
40°F	5.1	21.4	1085
45°F	4.5	22.5	1410

EPC/EFC150			
Delta T	**GPM**	**FT/HD**	**Eq Ft of 1" Pipe**
26.0°F	**10.6**	**4.0**	**53**
30°F	9.2	9.6	162
35°F	7.9	14.1	317
40°F	6.9	17.0	490
45°F	6.1	19.0	679

EPC/EFC199			
Delta T	**GPM**	**FT/HD**	**Eq Ft of 1" Pipe**
34.7°F	**10.6**	**4.0**	**53**
40°F	9.2	9.6	162
45°F	8.2	13.1	277

Assumed Equivalent Lengths (1" Pipe)	
Fitting / Component	**Eq Ft**
90° Elbow	2.5
45° Elbow	1.0
Tee (straight run)	0.5
Tee (side port)	4.5
Ball Valve	4.3
Swing Check	4.5
Flow Check Valve (typical)	54.0
Y-Strainer	4.5

NOTICE All equivalent pipe lengths are based on the minimum pipe size of one inch.

NOTICE The data provided takes into account the boiler and integral pump. Flow determination is based solely on piping external to the boiler.

NOTICE In Primary/Secondary, only the boiler loop is considered when determining flow. In full flow applications, all piping and equipment must be considered.

6A Hydronic piping

Figure 6-2 *Single Boiler - Primary / Secondary Piping_**COMBI ONLY***

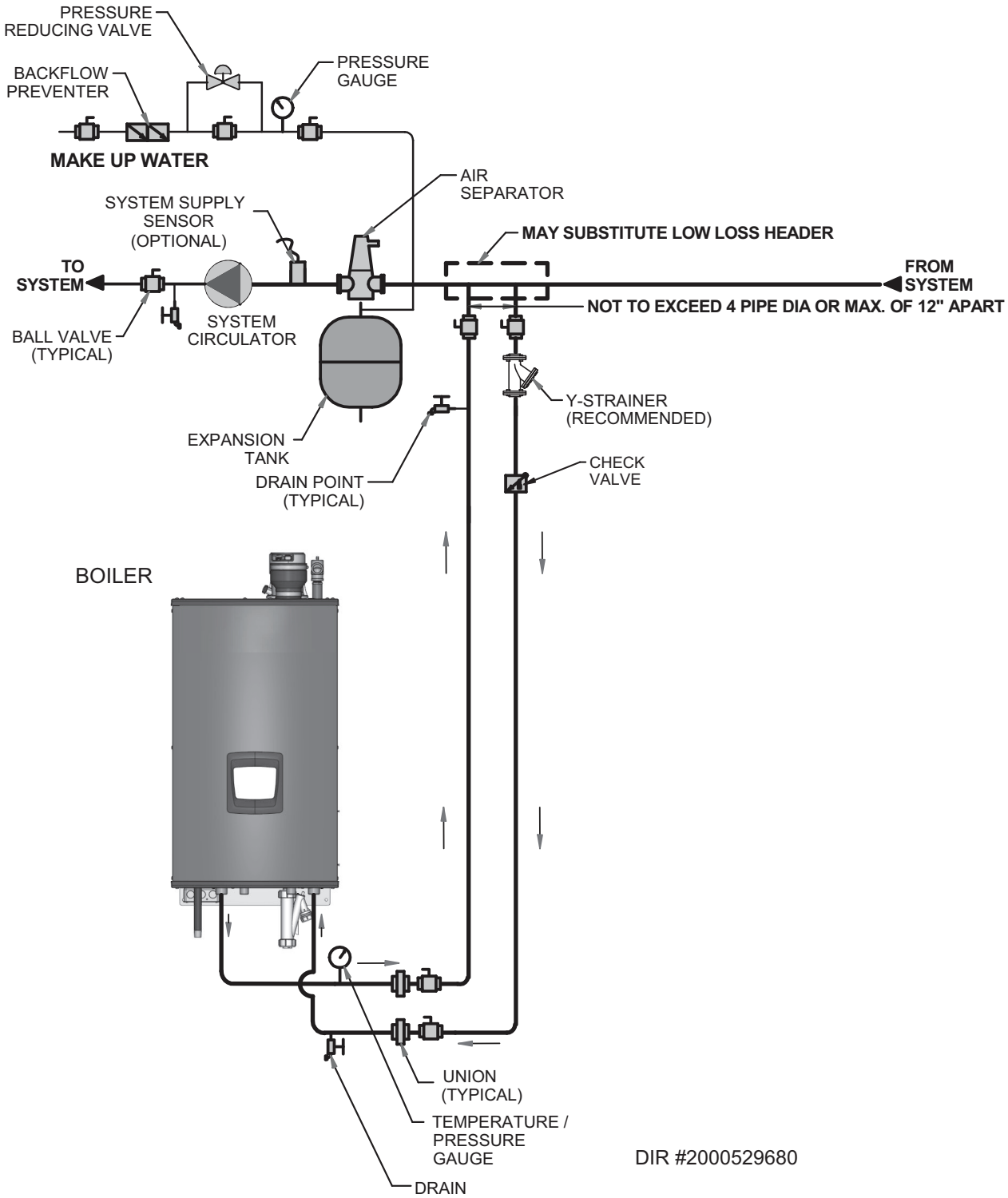

NOTICE DHW piping omitted for clarity.

CAUTION Mixing valves are required for the protection of low temperature loops.

NOTICE Please note that these illustrations are meant to show system piping concept only, the installer is responsible for all equipment and detailing required by local codes.

6A Hydronic piping *(continued)*

Figure 6-3A *Single Temperature Zoned with Circulators_**COMBI ONLY** - Wall Hung Unit*

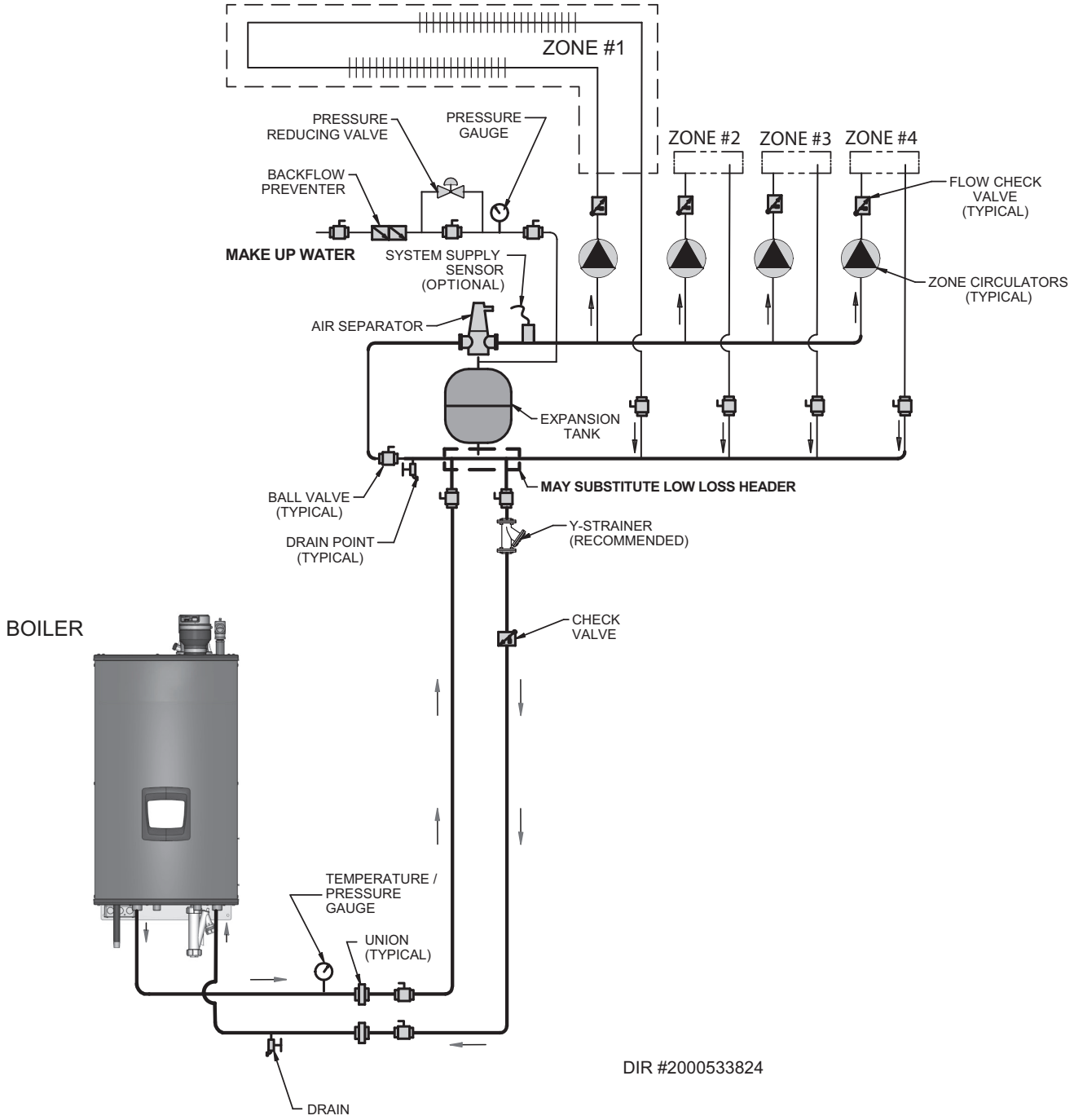

NOTICE DHW piping omitted for clarity.

CAUTION Mixing valves are required for the protection of low temperature loops.

NOTICE Please note that these illustrations are meant to show system piping concept only, the installer is responsible for all equipment and detailing required by local codes.

6A Hydronic piping *(continued)*

Figure 6-3B *Single Temperature Zoned with Circulators_**COMBI ONLY** - Floor Standing Unit*

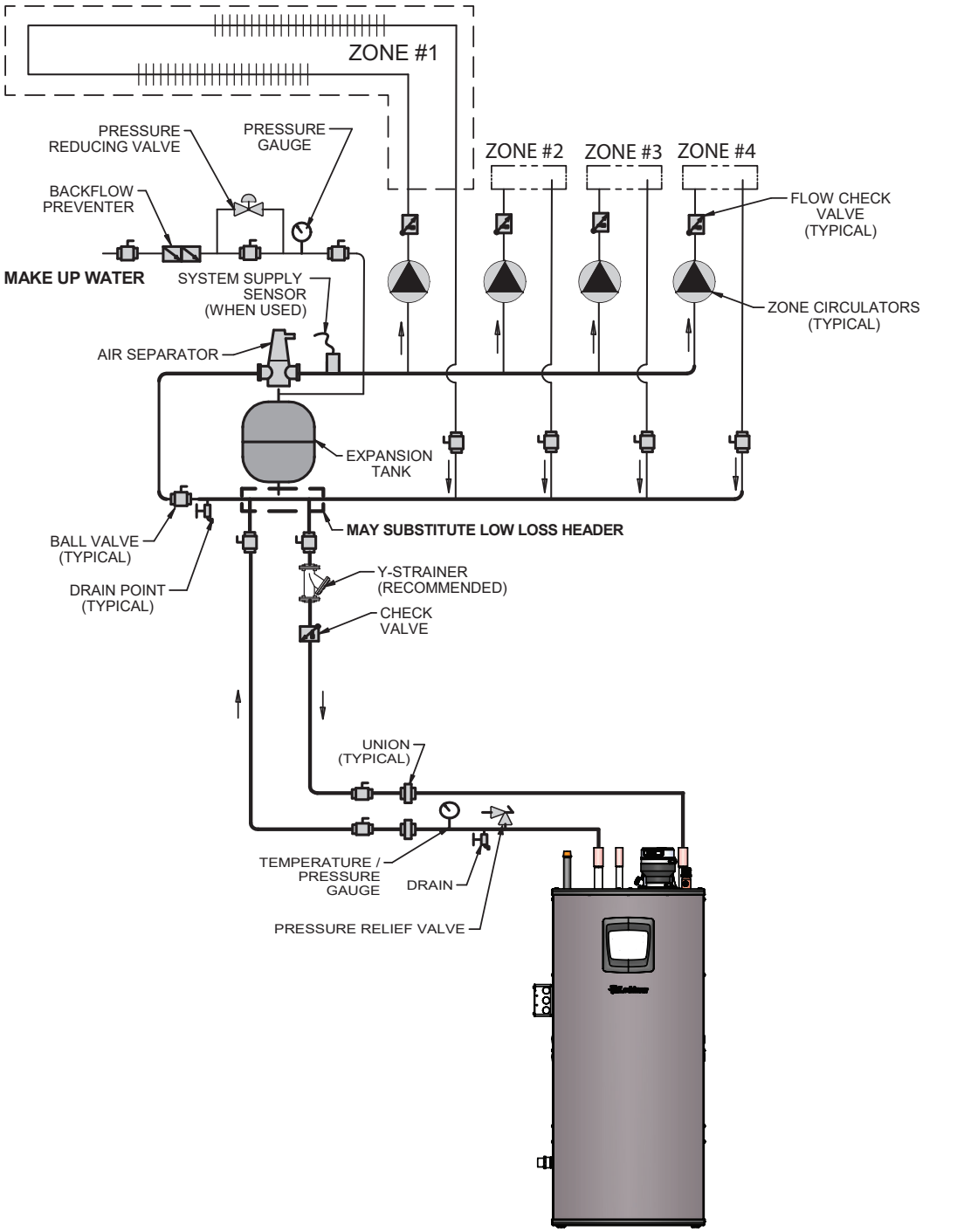

NOTICE DHW piping omitted for clarity.

CAUTION Mixing valves are required for the protection of low temperature loops.

NOTICE Please note that these illustrations are meant to show system piping concept only, the installer is responsible for all equipment and detailing required by local codes.

6A Hydronic piping

Figure 6-4 *Multiple Boilers - Single Temperature Zoned with Circulators_**COMBI ONLY***

Model	Number of Units						
	2	3	4	5	6	7	8
	Required Pipe Sizes						
110	1 1/2"	2"	2"	2 1/2"	2 1/2"	3"	3"
150	2"	2"	2 1/2"	3"	3"	3 1/2"	3 1/2"
199	2"	2 1/2"	3"	3"	3 1/2"	4"	4"

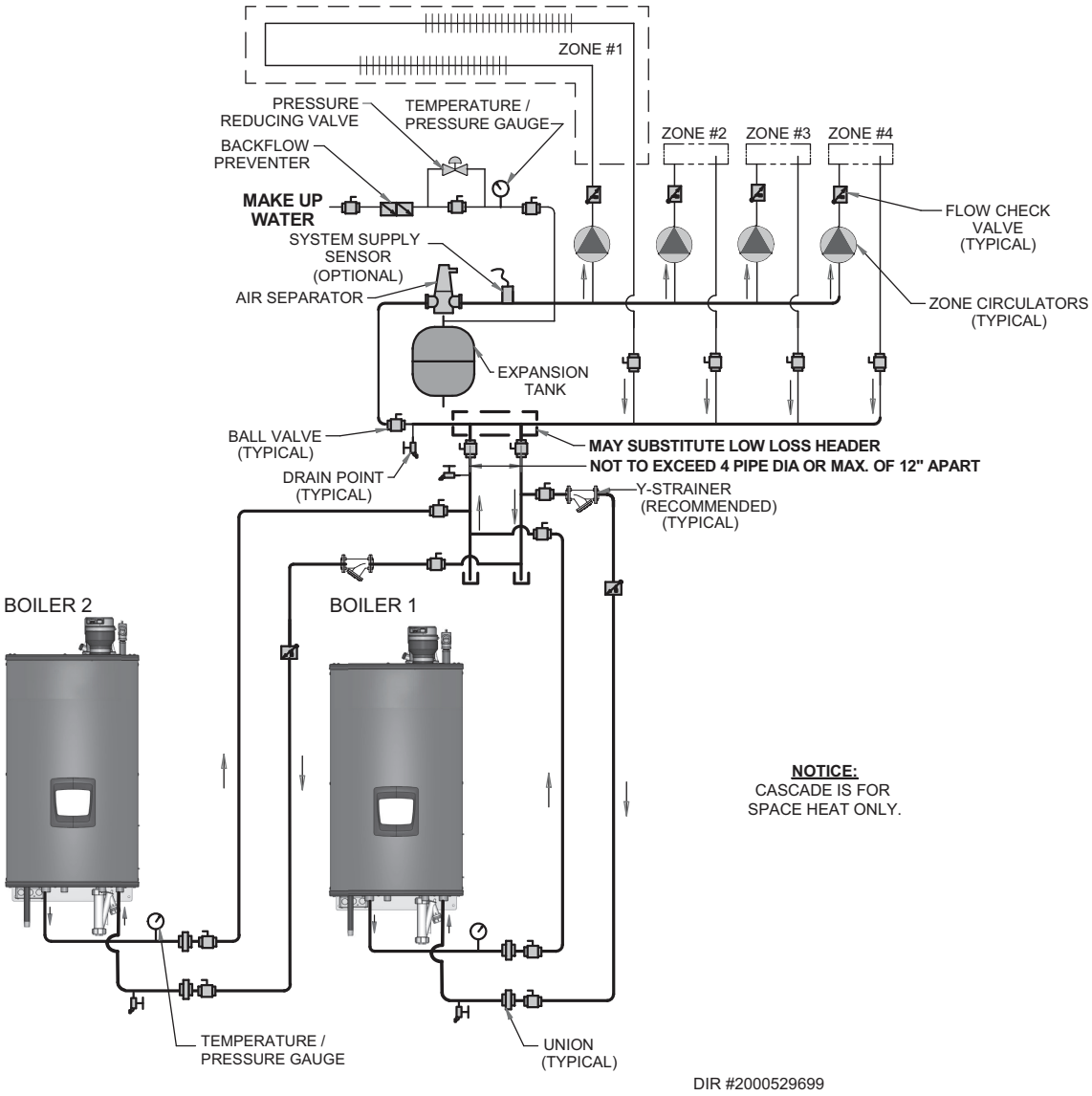

NOTICE DHW piping omitted for clarity.

CAUTION Mixing valves are required for the protection of low temperature loops.

NOTICE Please note that these illustrations are meant to show system piping concept only, the installer is responsible for all equipment and detailing required by local codes.

6A Hydronic piping *(continued)*

Figure 6-5 *Single Temperature Piped with Air Handler_**COMBI ONLY***

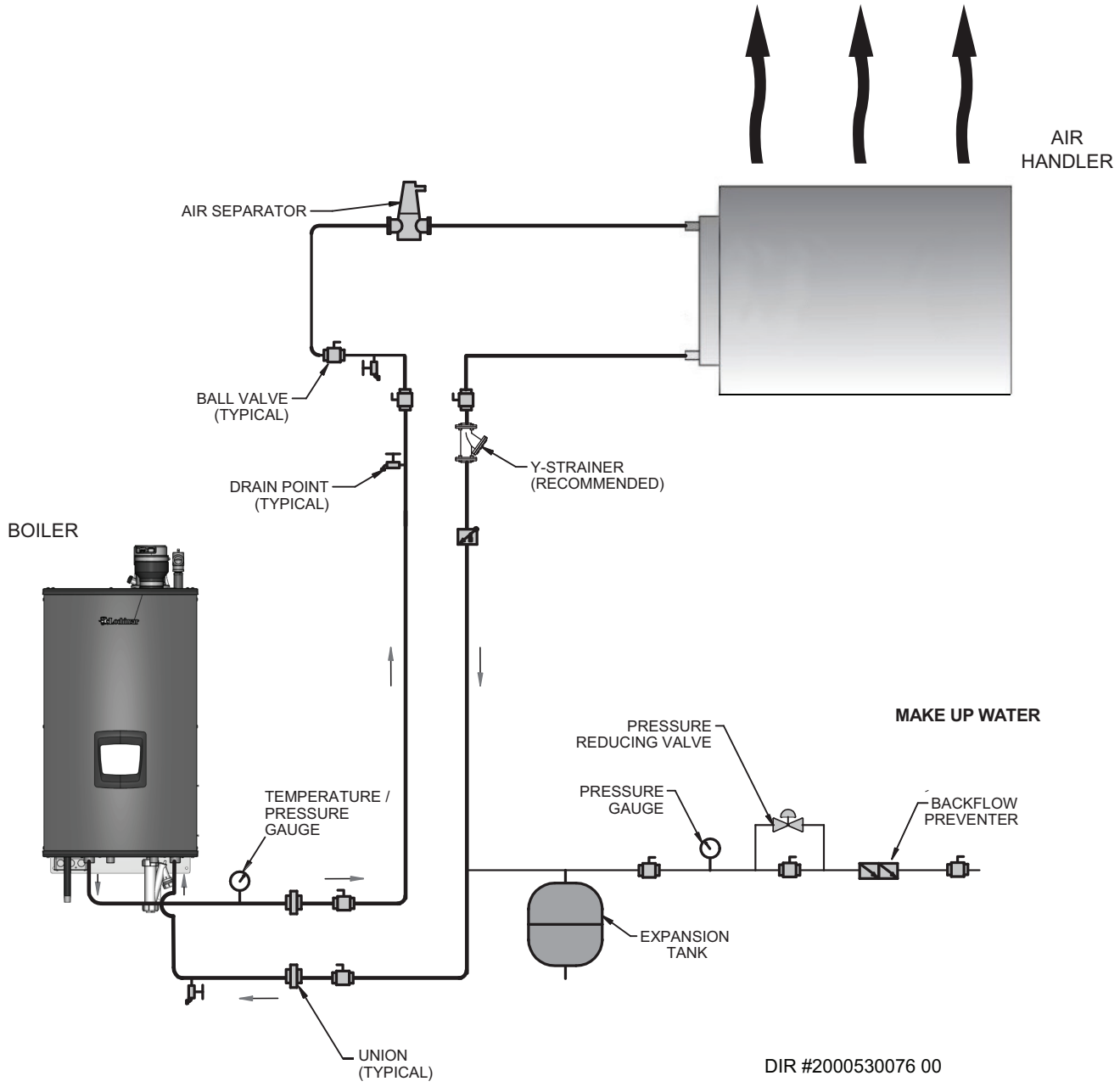

NOTICE DHW piping omitted for clarity.

NOTICE Please note that these illustrations are meant to show system piping concept only, the installer is responsible for all equipment and detailing required by local codes.

6A Hydronic piping

Figure 6-6** Pressure Drop vs. Flow_**BOILER ONLY

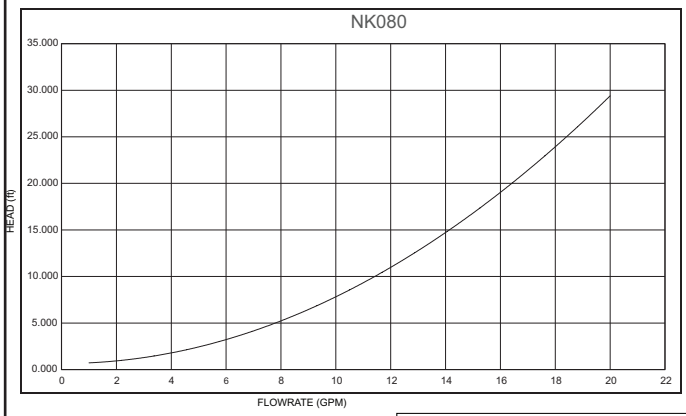

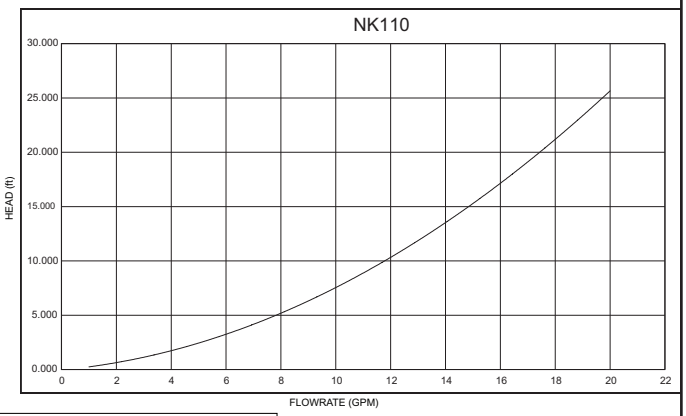

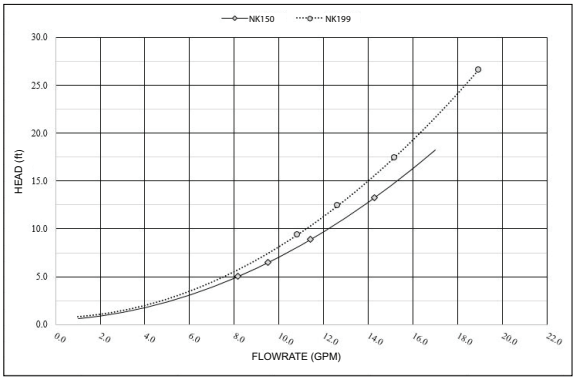

***Table 6B** Circulator Recommendations for Temperature Rise Applications_20°, 25°, 30, and 35°_Boiler Only*

Model	Minimum Pipe Ø	20°F		25°F		30°F		35°F		Maximum Flow		Minimum Flow	
												High Fire	Low Fire
80	1"	7.6 gpm	4.8 ft/hd	6.1 gpm	3.3 ft/hd	5.1 gpm	2.5 ft/hd	4.3 gpm	2.0 ft/hd	17.0 gpm	21.4 ft/hd	3.0 gpm	1.0 gpm
110	1"	10.5 gpm	8.2 ft/hd	8.4 gpm	5.6 ft/hd	7.0 gpm	4.1 ft/hd	6.0 gpm	3.2 ft/hd	17.0 gpm	19.1 ft/hd	4.2 gpm	1.0 gpm
150	1"	14.3 gpm	13.2 ft/hd	11.4 gpm	8.9 ft/hd	9.5 gpm	6.5 ft/hd	8.2 gpm	5.0 ft/hd	17.0 gpm	18.3 ft/hd	5.7 gpm	1.0 gpm
199	1"	18.9 gpm	26.6 ft/hd	15.1 gpm	17.4 ft/hd	12.6 gpm	12.4 ft/hd	10.8 gpm	9.4 ft/hd	19.0 gpm	26.8 ft/hd	7.6 gpm	1.5 gpm

Model	Grunfos	Speed	Taco	Bell & Gossett	Armstrong
80, 110	UPS 15-58 FC	High	005F, 007F, 008F, 0010F-IFC,00R-MSF1-IFC	NRF-22, LR-20WR	Astro 30, Astro 50-3
		Medium	005F-(IFC), 007F-(IFC), 008F-(IFC), 0010F-IFC, 00R-IFC, 00R-MSF1-IFC	NRF9F/LW	Astro 25, Astro 30-3
		Low	005F-(IFC), 006F-(IFC), 00R-MSF1-IFC	--	Astro 20
150	UPS 26-99 FC	High	0013(B)-IFC	NRF-36 Sp-2,NRF-45 Sp-2	E7(B)
		Medium	0011(F,B)-(IFC), 0014(F,B)-(IFC)	Series 100, PL-30, NRF-36 Sp-1,NRF-45 Sp-1, PR	Astro 50(B), H41
		Low	--	LR-15BWR	Astro 30(B)
199	UPS 26-150 FC	High	1400-45(B)	PL-55(B)	--
		Medium	0011(F, B, SF), 0013(F, B, SF), 1400-20(F, B)	PL-36(B)	E8(B), E9(B)
		Low	--	NRF-36 Sp-2 & 3, NBF-36 Sp-2 & 3	E7(B)

NOTICE Pump sizing and flow requirements are based on 20 feet of piping, 4 - 90° elbows, and 2 - fully ported ball valves.

NOTICE The temperature rise provided by a pump/model combination will decrease by 3% per 1000 feet of elevation.

6A Hydronic piping *(continued)*

Figure 6-7 *Single Boiler - Primary / Secondary Piping_**BOILER ONLY***

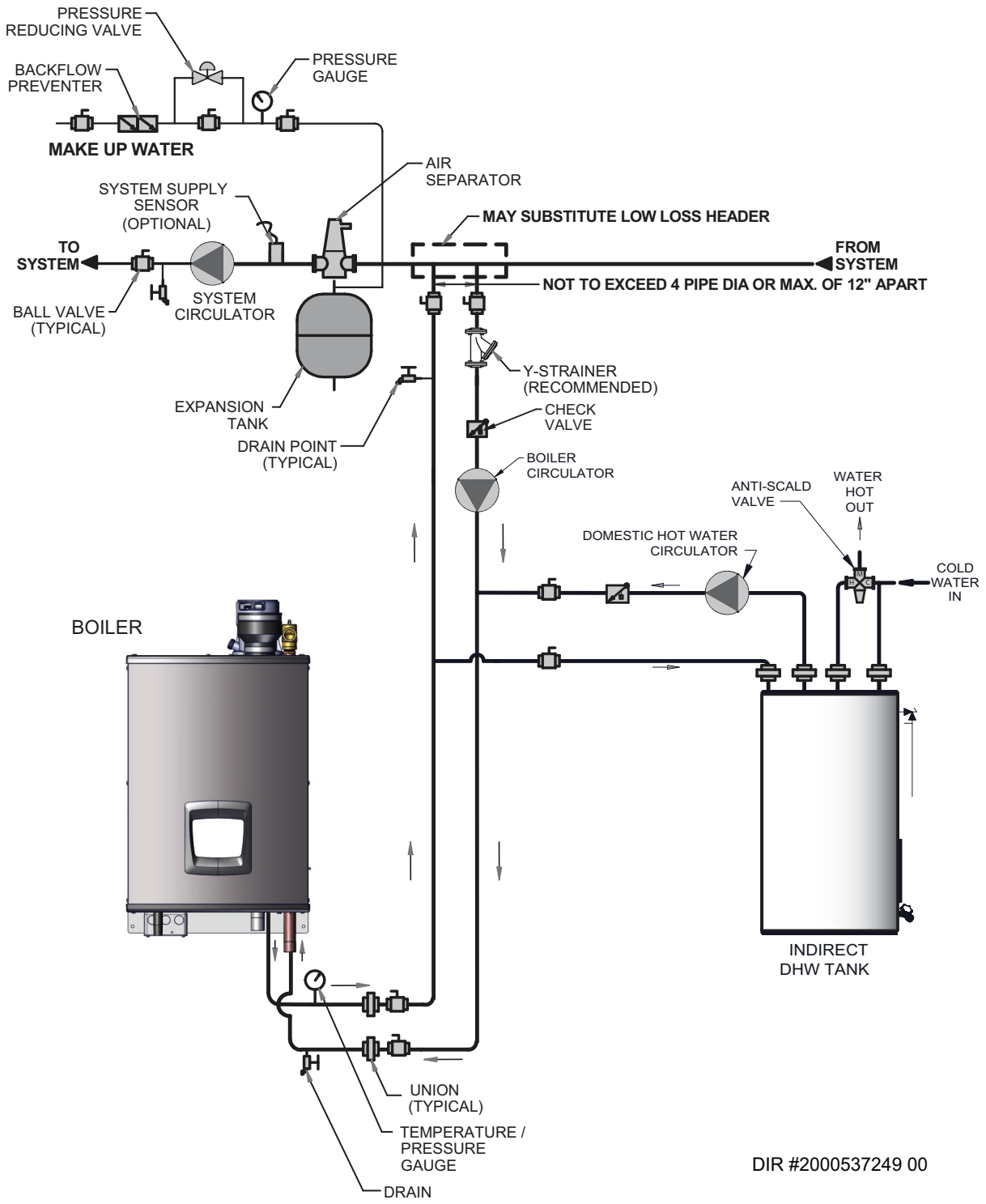

NOTICE Please note that these illustrations are meant to show system piping concept only, the installer is responsible for all equipment and detailing required by local codes.

6A Hydronic piping

Figure 6-8 *Single Temperature Zoned with Circulators_**BOILER ONLY***

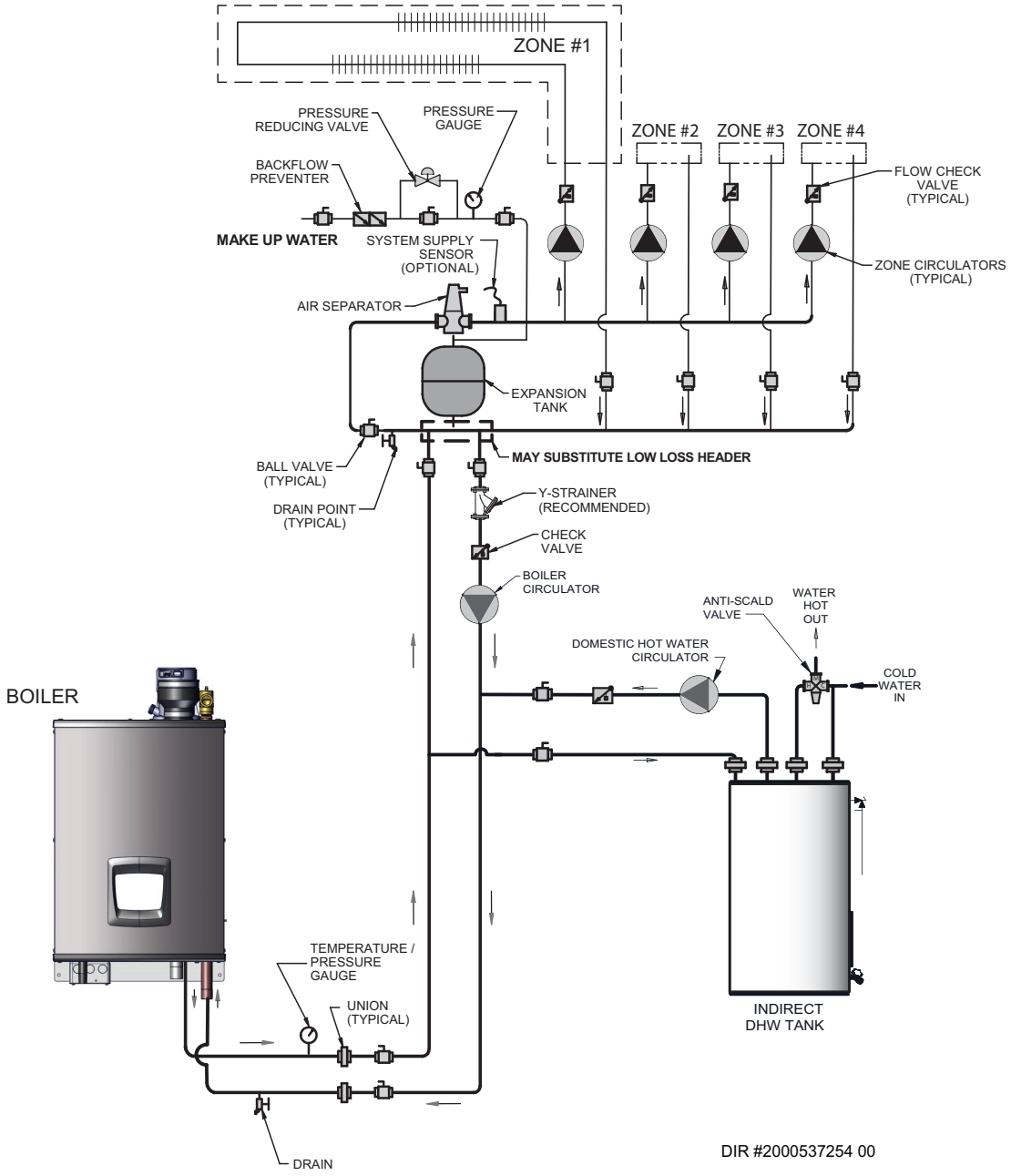

NOTICE Please note that these illustrations are meant to show system piping concept only, the installer is responsible for all equipment and detailing required by local codes.

CAUTION Mixing valves are required for the protection of low temperature loops.

6A Hydronic piping *(continued)*

Figure 6-9 *Multiple Boilers - Single Temperature Zoned with Circulators_**BOILER ONLY***

Model	Number of Units						
	2	3	4	5	6	7	8
	Required Pipe Sizes						
80	1 1/4"	1 1/2"	2"	2"	2 1/2"	2 1/2"	2 1/2"
110	1 1/2"	2"	2"	2 1/2"	2 1/2"	3"	3"
150	2"	2"	2 1/2"	3"	3"	3 1/2"	3 1/2"
199	2"	2 1/2"	3"	3"	3 1/2"	4"	4"

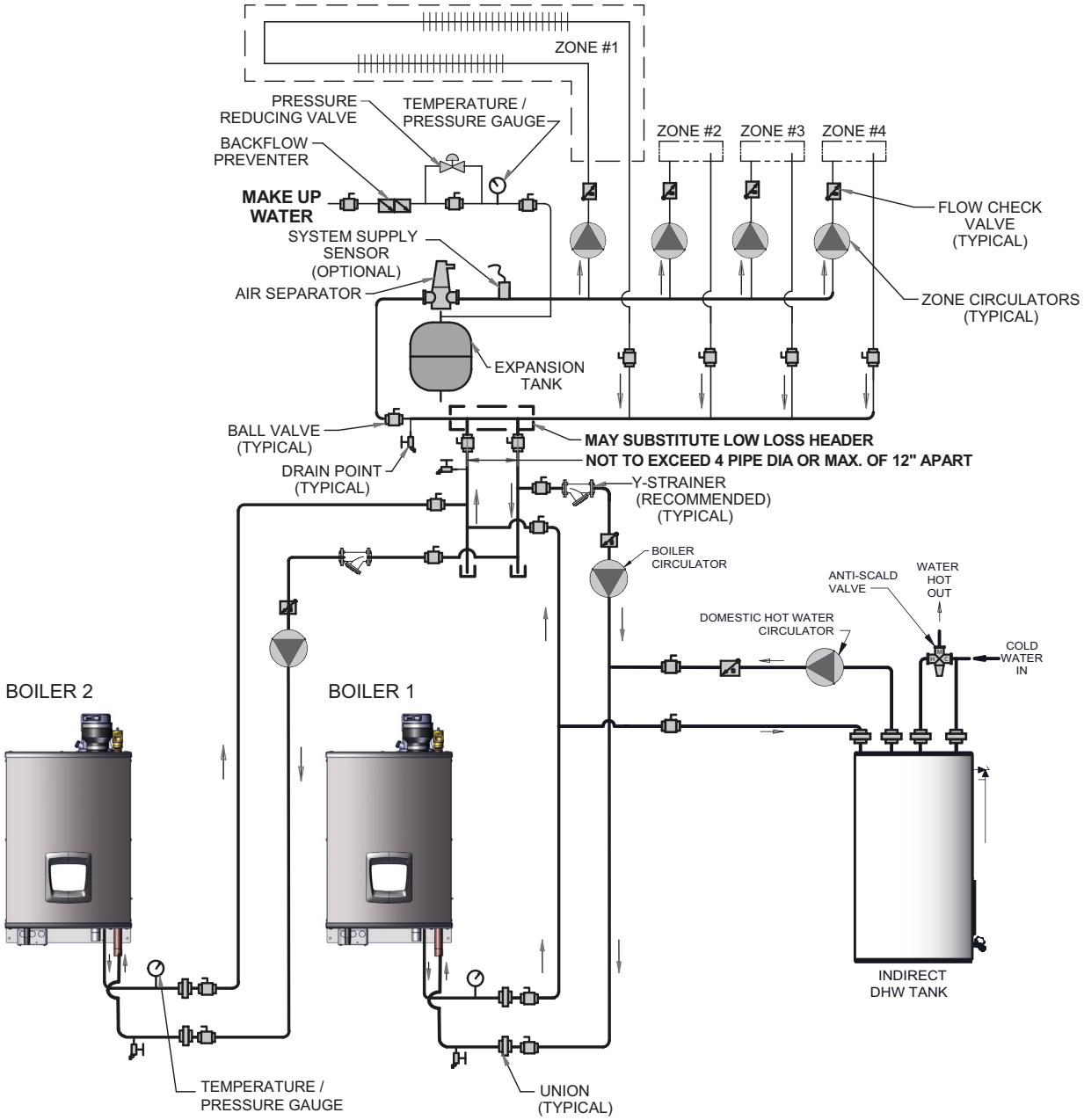

DIR #2000537257 00

NOTICE Please note that these illustrations are meant to show system piping concept only, the installer is responsible for all equipment and detailing required by local codes.

CAUTION Mixing valves are required for the protection of low temperature loops.

6B Domestic water piping (Combi Only)

Scalding

This combi heater can deliver scalding temperature water at any faucet in the system. Be careful whenever using hot water to avoid scalding injury. Certain appliances such as dishwashers and automatic clothes washers may require increased temperature water. By setting the thermostat on this combi heater to obtain the increased temperature water required by these appliances, you may create the potential for scald injury. To protect against injury, you MUST install an ASSE 1070 anti-scald mixing valve in the water system. This valve will reduce point of discharge temperature by mixing cold and hot water in branch supply lines. Such valves are available from the local plumbing supplier.

⚠ WARNING An ASSE 1070 anti-scald mixing valve is REQUIRED. Failure to comply could result in property damage, severe injury, or death.

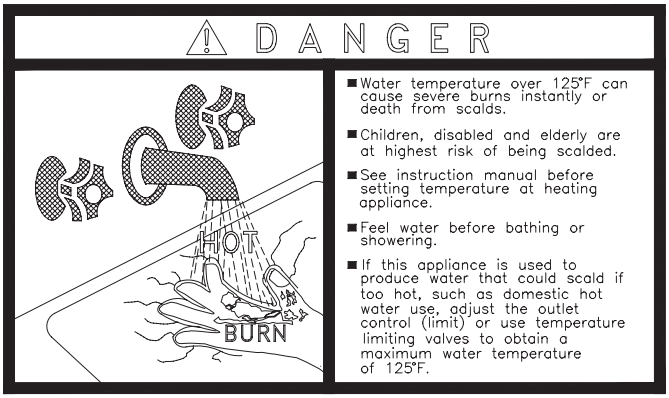

The following table (Table 6C) details the relationship of water temperature and time with regard to scald injury and may be used as a guide in determining the safest water temperature for your applications.

***Table 6C** Approximate Time / Temperature Scald Chart*

APPROXIMATE TIME / TEMPERATURE RELATIONSHIPS IN SCALDS	
120°F	More than 5 minutes
125°F	1 1/2 to 2 minutes
130°F	About 30 seconds
135°F	About 10 seconds
140°F	Less than 5 seconds
145°F	Less than 3 seconds
150°F	About 1 1/2 seconds
155°F	About 1 second

NOTICE When connecting the unit to piping made of a different material, use of a dielectric fitting or a dielectric union conforming to ASSE 1079 is recommended to prevent corrosion and potential subsequent water leaks at or near the connection. Dielectric fittings may be required by local plumbing codes.

Water chemistry

Any damage or failure resulting from improper water chemistry, or heating anything other than potable water. DEFINITION OF POTABLE WATER - Potable water is defined as drinkable water supplied from utility or well water in compliance with EPA secondary maximum contaminant levels (40 CFR Part 143.3) as shown in Table 6D - Potable Water.

***Table 6D** Potable Water*

Potable Water Levels	
Contaminant	**Level**
Total Hardness	200 mg/l (12 grains/gallon)
Aluminum	0.05 to 0.2 mg/l
Chloride	250 mg/l
Color	15 color units
Copper	1.0 mg/l
Corrosivity	Non-corrosive
Fluoride	2.0 mg/l
Foaming Agents	0.5 mg/l
Iron	0.3 mg/l
Manganese	0.05 mg/l
Odor	3 threshold odor number
pH	6.5 - 8.5
Silver	0.1 mg/l
Sulfate	250 mg/l
Total Dissolved Solids (TDS)	500 mg/l
Zinc	5 mg/l

Near heater piping components

1. **Recirculation pump (optional):**
   Field supplied. The recirculation pump shuts off flow at the desired DHW set point.
2. **Check valves:**
   Field supplied. Check valves are recommended for installation as shown in FIG.'s 6-6 through 6-8. Failure to install check valves could result in a reverse flow condition during pump(s) off cycle.
3. **Domestic hot water isolation valves:**
   Field supplied. Full port ball valves are required. Failure to use full port ball valves could result in a restricted flow rate through the boiler.
4. **Anti-scald mixing valve:**
   Field supplied. For use when utilizing the DHW option. An ASSE 1070 anti-scald mixing valve is required.
5. **Unions:**
   Field supplied. Recommended for unit serviceability.
6. **Temperature and pressure gauge:**
   Field supplied. It is the responsibility of the contractor to provide and install the temperature and pressure gauge on the boiler water outlet.
7. **Pressure relief valve:**
   Field supplied. The pressure relief valve is sized to ASME specifications.

6B Domestic water piping (Combi Only)

***Table 6E** DHW Pressure Drop Chart*

DHW PRESSURE DROP

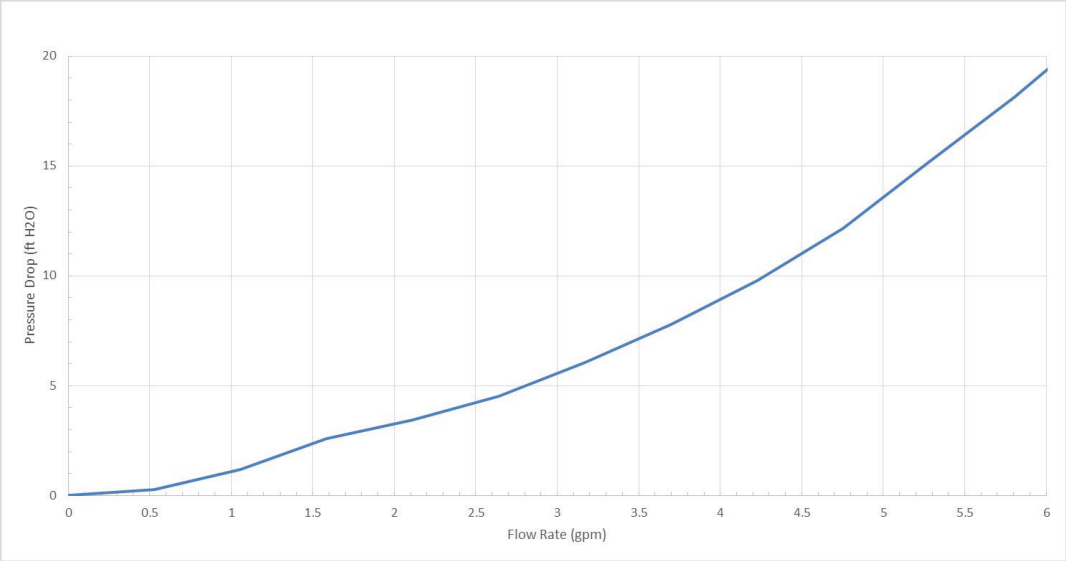

Combi Sequence of operation

The cold domestic water enters the plate heat exchanger through the DHW inlet connection, flow switch, and strainer. Cold water flows through the plate heat exchanger, where it is heated by hot boiler water, and then discharged through the Domestic Hot Water (DHW) outlet connection.

Heated boiler water is supplied from the primary combustion heat exchanger through the diverter valve into the plate heat exchanger. The boiler water heats the colder domestic water, and is then returned to the primary heat exchanger through the pump.

While operating in DHW Mode, the diverter valve prevents water from flowing through the boiler outlet connection to the heating system. Boiler water is circulated inside the unit between the plate heat exchanger and the primary combustion heat exchanger.

The diverter valve is normally in the DHW position when the unit is in Standby, thus isolating boiler water from flowing to the heating system. When there is a space heating call, the diverter valve will move to the space heat position allowing boiler water to flow from the primary combustion heat exchanger through the boiler outlet connection to the heating system, bypassing the plate heat exchanger. The internal pump is used to circulate water in both Space Heating and DHW Modes.

6B Domestic water piping (Combi Only) *(continued)*

Figure 6-10A *Combi DHW Piping - Wall Hung Unit*

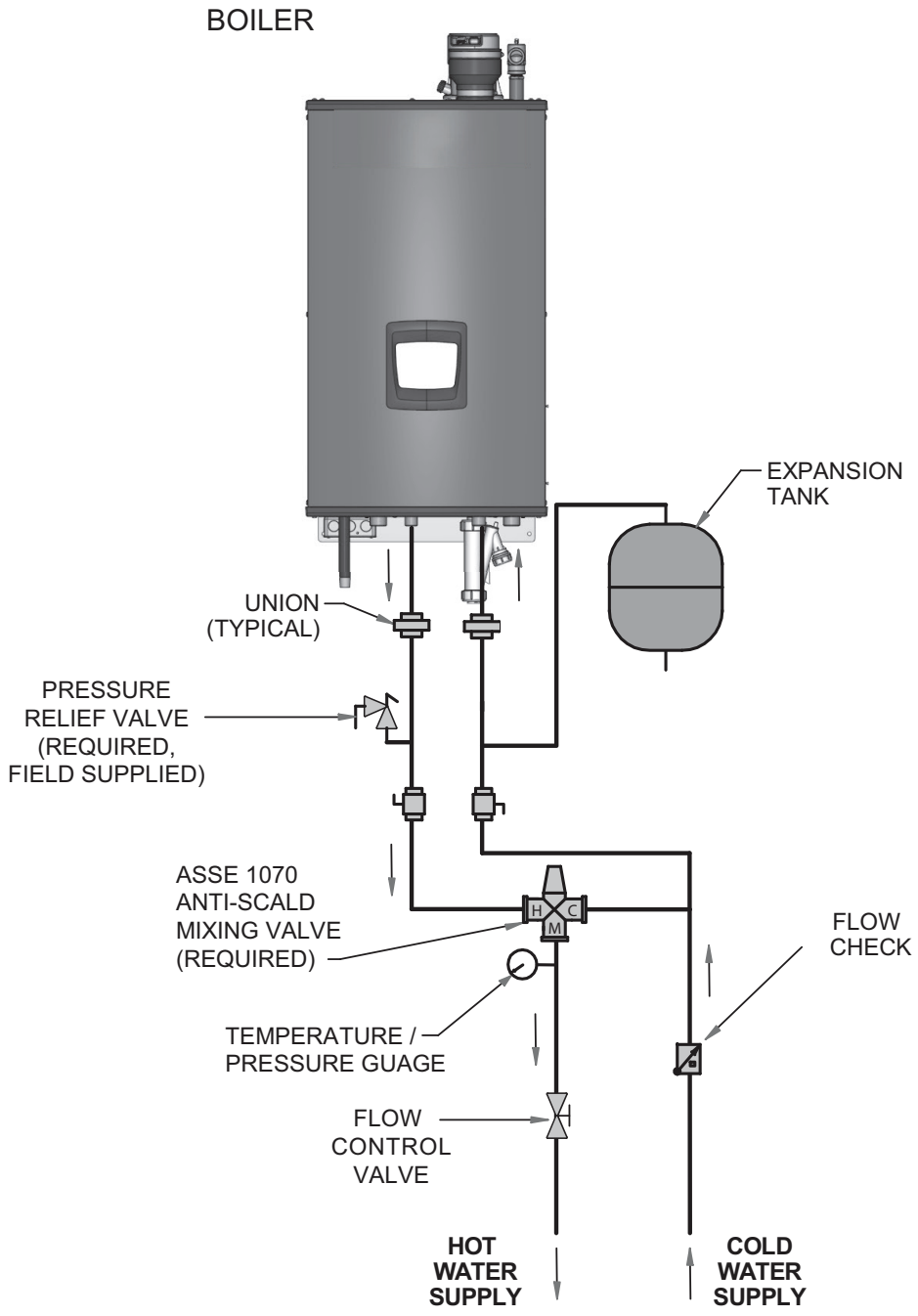

DIR #2000534676 00

NOTICE Hydronic piping omitted for clarity.

NOTICE Please note that these illustrations are meant to show system piping concept only, the installer is responsible for all equipment and detailing required by local codes.

⚠WARNING An ASSE 1070 anti-scald mixing valve is REQUIRED. Failure to comply could result in property damage, severe injury, or death.

6B Domestic water piping (Combi Only) *(continued)*

Figure 6-10B *Combi DHW Piping - Floor Standing Unit*

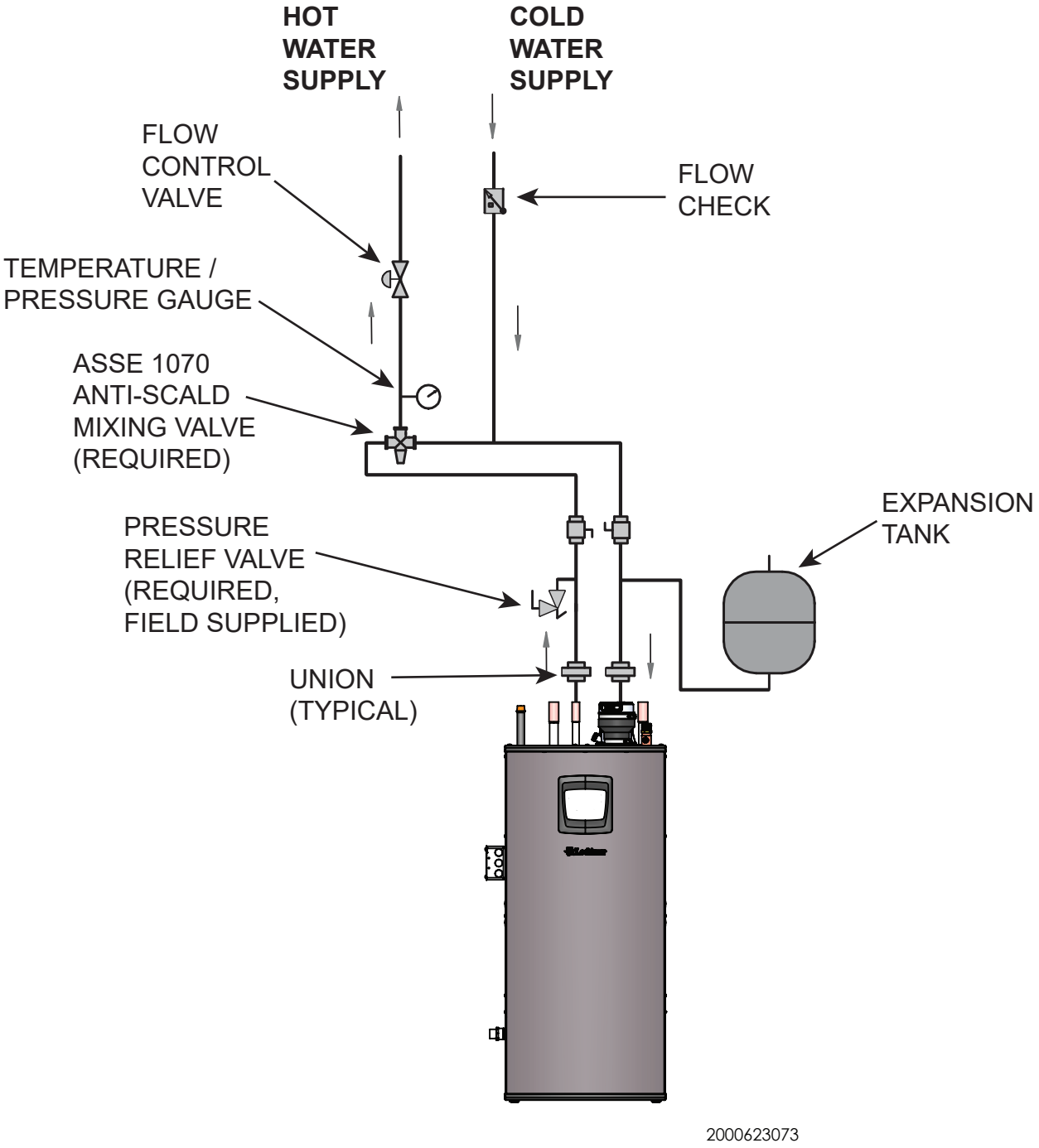

NOTICE Hydronic piping omitted for clarity.

NOTICE Please note that these illustrations are meant to show system piping concept only, the installer is responsible for all equipment and detailing required by local codes.

⚠WARNING An ASSE 1070 anti-scald mixing valve is REQUIRED. Failure to comply could result in property damage, severe injury, or death.

6B Domestic water piping (Combi Only)

Figure 6-11 *DHW Recirculation w/Dedicated Return*

Note: Aquastat for DHW recirculation pump or thermostatic shut off valve must be used to stop recirculation water flow once the desired temperature has been reached.

For best performance, Pre-Heat Mode should be enabled when using DHW recirculation.

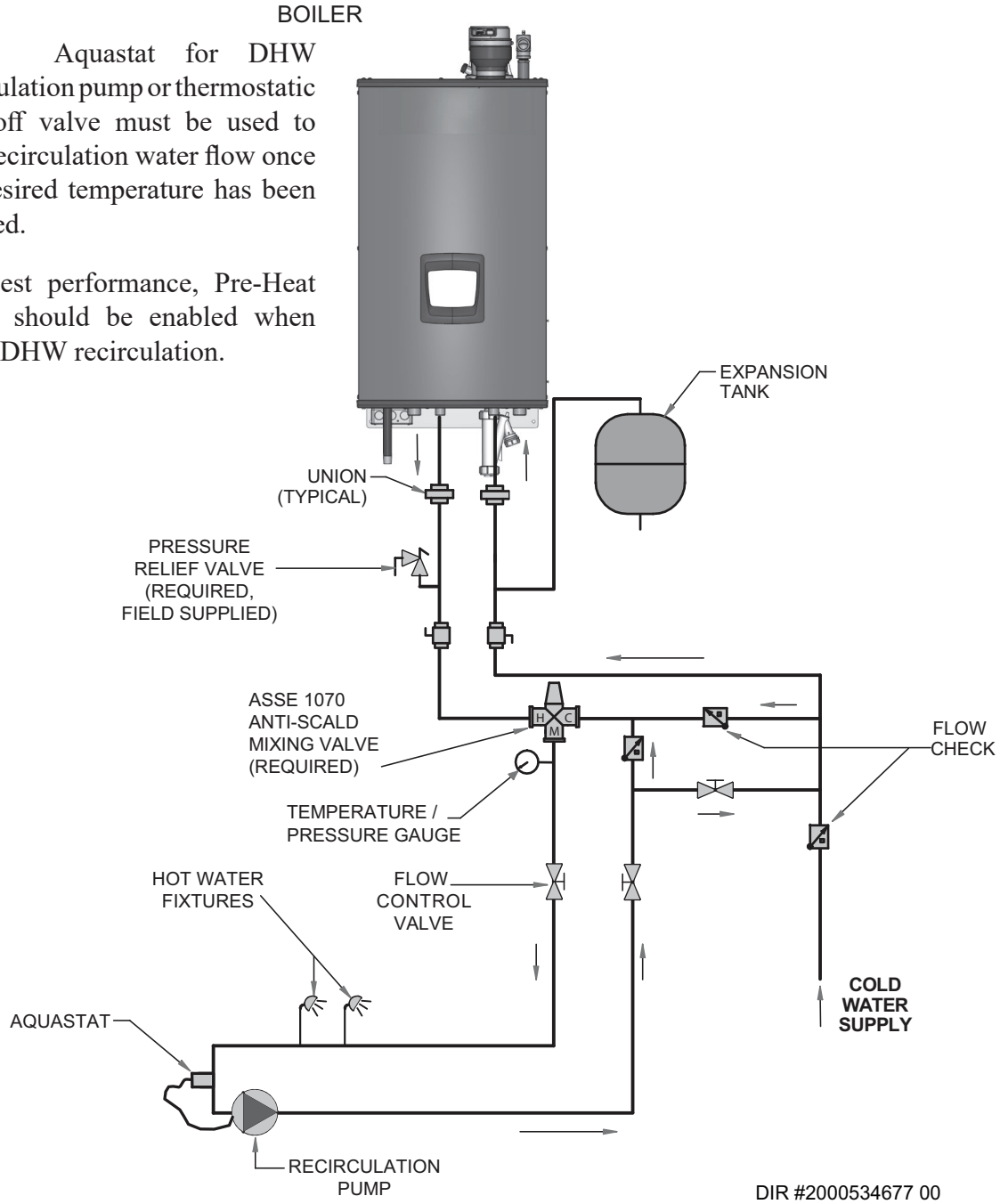

NOTICE Hydronic piping omitted for clarity.

⚠WARNING To prevent scalding from DHW recirculation temperature creep, a suitable method to stop recirculation flow once water in the loop has reached the desired temperature must be used. Failure to stop water flow once the desired DHW temperature has been reached can result in serious injury or death due to scalding.

NOTICE Please note that these illustrations are meant to show system piping concept only, the installer is responsible for all equipment and detailing required by local codes.

⚠WARNING An ASSE 1070 anti-scald mixing valve is REQUIRED. Failure to comply could result in property damage, severe injury, or death.

6B Domestic water piping (Combi Only) *(continued)*

Figure 6-12 *DHW Piping w/Recirculation Return Through Cold Line*

Note: Aquastat for DHW recirculation pump or thermostatic shut off valve must be used to stop recirculation water flow once the desired temperature has been reached.

For best performance, Pre-Heat Mode should be enabled when using DHW recirculation.

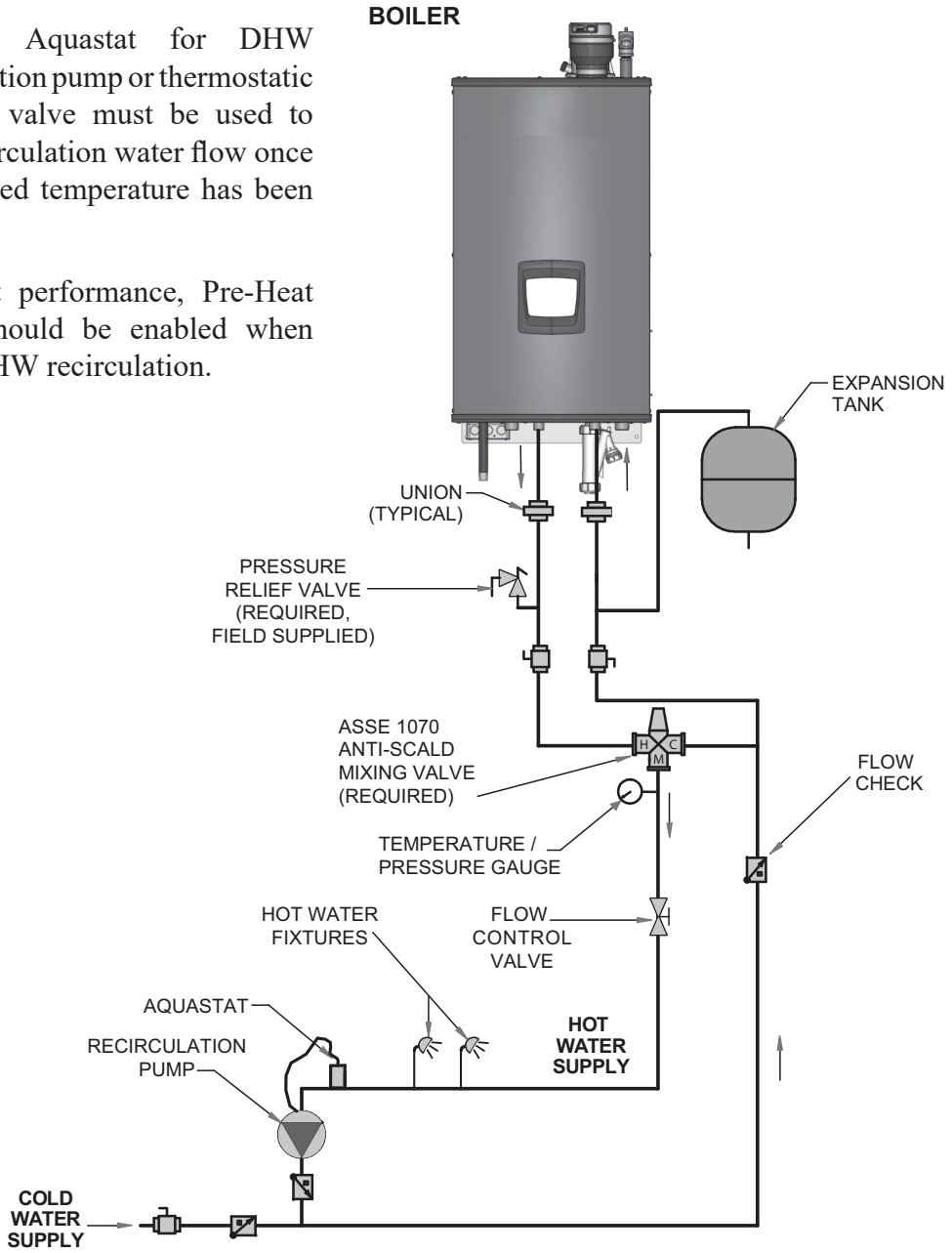

NOTICE Hydronic piping omitted for clarity.

⚠WARNING To prevent scalding from DHW recirculation temperature creep, a suitable method to stop recirculation flow once water in the loop has reached the desired temperature must be used. Failure to stop water flow once the desired DHW temperature has been reached can result in serious injury or death due to scalding.

NOTICE Please note that these illustrations are meant to show system piping concept only, the installer is responsible for all equipment and detailing required by local codes.

⚠WARNING An ASSE 1070 anti-scald mixing valve is REQUIRED. Failure to comply could result in property damage, severe injury, or death.

7 Gas connections

Connecting gas supply piping

1. Remove the front access panel and refer to FIG. 7-1 to pipe gas to the boiler.
   a. Install a field supplied sediment trap / drip leg upstream of the boiler gas controls.

Figure 7-1 *Gas Supply Piping*

Wall hung

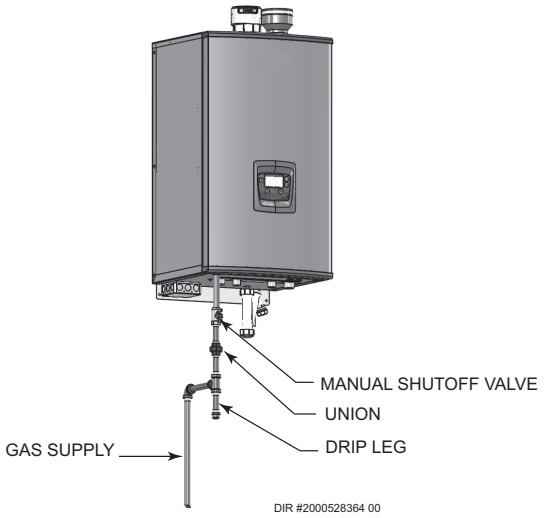

Floor standing

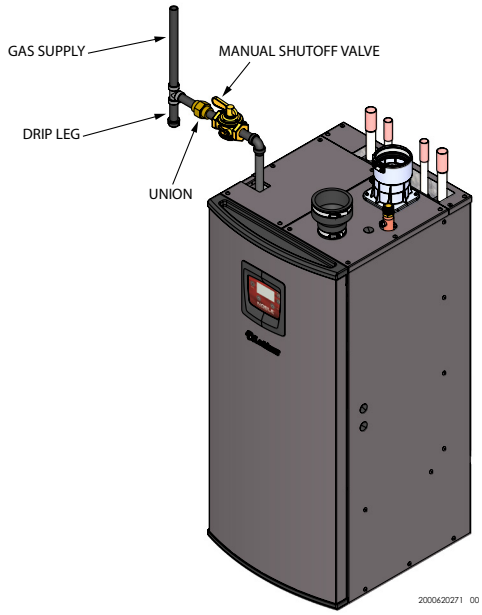

2. Support piping with hangers, not by the boiler or its accessories.

⚠WARNING The gas valve and blower will not support the weight of the piping. Do not attempt to support the weight of the piping with the boiler or its accessories. Failure to comply could result in severe personal injury, death, or substantial property damage.

3. Purge all air from the gas supply piping.

4. Before placing the boiler in operation, check the boiler and its gas connection for leaks.
   a. Close manual main shutoff valve during any pressure testing at more than 14 inches w.c.
   b. Disconnect the boiler and gas valve from the gas supply piping during any pressure testing greater than 14 inches w.c.

⚠WARNING Do not check for gas leaks with an open flame – use the bubble test. Failure to use the bubble test or check for gas leaks can cause severe personal injury, death, or substantial property damage.

5. Use pipe sealing compound compatible with propane gases. Apply sparingly only to male threads of the pipe joints so that pipe dope does not block gas flow.

7 Gas connections *(continued)*

⚠WARNING Failure to apply pipe sealing compound as detailed in this manual can result in severe personal injury, death, or substantial property damage.

⚠WARNING Epic Fire Tubes are typically shipped ready to fire on natural gas. Check boiler rating plate to determine which fuel the boiler is set for. If set to natural gas, it may be converted to LP by installing an LP venturi (see page 12). In order to operate on LP gas, an LP venturi MUST BE installed. Failure to comply could result in severe personal injury, death, or substantial property damage.

⚠WARNING Use two wrenches when tightening gas piping at boiler (FIG. 7-2), using one wrench to prevent the boiler gas line connection from turning. Failure to support the boiler gas connection pipe to prevent it from turning could damage gas line components.

Figure 7-2 *Inlet Pipe with Backup Wrench*

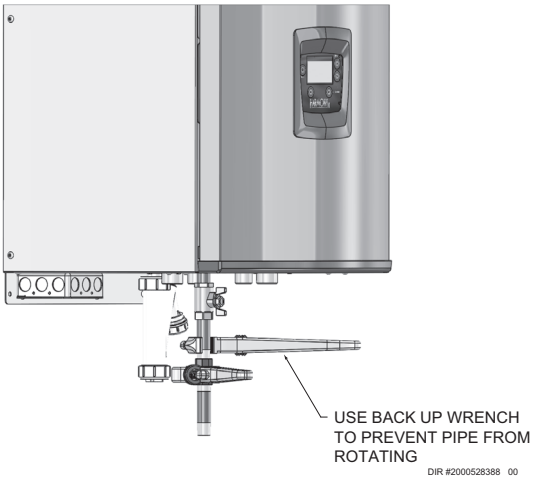

NOTICE Maximum inlet gas pressure must not exceed the value specified. Minimum value listed is for the purposes of input adjustment.

Natural gas:

Pipe sizing for natural gas

1. Refer to Table 7A for pipe length and diameter. Based on rated boiler input (divide by 1,000 to obtain cubic feet per hour).
   a. Table 7A is only for natural gas with specific gravity 0.60 inches, with a pressure drop through the gas piping of 0.3 inches w.c.
   b. For additional gas pipe sizing information, refer to ANSI Z223.1 (or B149.1 for Canadian installations).

Natural gas supply pressure requirements

1. Pressure required at the gas valve inlet pressure port:
   - Maximum 14 inches w.c. with no flow (lockup) or with boiler on.
   - Minimum 4 inches w.c. with gas flowing (verify during boiler startup).
2. Install 100% lockup gas pressure regulator in supply line if inlet pressure can exceed 14 inches w.c. at any time. Adjust lockup regulator for 14 inches w.c. maximum.

Propane Gas:

⚠WARNING Epic Fire Tubes are typically shipped ready to fire on natural gas. Check boiler rating plate to determine which fuel the boiler is set for. If set to natural gas, it may be converted to LP by installing an LP venturi (see page 12). In order to operate on LP gas, an LP venturi MUST BE installed. Failure to comply could result in severe personal injury, death, or substantial property damage.

Pipe sizing for propane gas

1. Contact gas supplier to size pipes, tanks, and 100% lockup gas pressure regulator.

Propane Supply Pressure Requirements

1. Adjust propane supply regulator provided by the gas supplier for 14 inches w.c. maximum pressure.
2. Pressure required at gas valve inlet pressure port:
   - Maximum 14 inches w.c. with no flow (lockup) or with boiler on.
   - Minimum 8 inches w.c. with gas flowing (verify during boiler startup).

⚠WARNING Ensure that the high gas pressure regulator is at least 6 - 10 feet upstream of the appliance.

7 Gas connections

Table 7A *Natural Gas Pipe Size Chart*

Capacity of Schedule 40 Metallic Pipe in Cubic Feet of Natural Gas Per Hour (based on .60 specific gravity, 0.30" w.c. pressure drop)														
Pipe Size (Inches)	Length of Pipe in Straight Feet													
	10	20	30	40	50	60	70	80	90	100	125	150	175	200
1/2	131	90	72	62	55	N/A	N/A	N/A	N/A	N/A	N/A	N/A	N/A	N/A
3/4	273	188	151	129	114	104	95	89	83	79	70	63	58	N/A
1	514	353	284	243	215	195	179	167	157	148	131	119	109	102
1 1/4	1,060	726	583	499	442	400	368	343	322	304	269	244	224	209
1 1/2	1,580	1,090	873	747	662	600	552	514	482	455	403	366	336	313
2	3,050	2,090	1,680	1,440	1,280	1,160	1,060	989	928	877	777	704	648	602
2 1/2	4,860	3,340	2,680	2,290	2,030	1,840	1,690	1,580	1,480	1,400	1,240	1,120	1,030	960
3	8,580	5,900	4,740	4,050	3,590	3,260	3,000	2,790	2,610	2,470	2,190	1,980	1,820	1,700
4	17,500	12,000	9,660	8,270	7,330	6,640	6,110	5,680	5,330	5,040	4,460	4,050	3,720	3,460

NOTICE For more details and additional sizing charts, reference the National Fuel Gas Code.

⚠WARNING Epic Fire Tubes are typically shipped ready to fire on natural gas. Check boiler rating plate to determine which fuel the boiler is set for. If set to natural gas, it may be converted to LP by installing an LP venturi (see page 12). In order to operate on LP gas, an LP venturi MUST BE installed. Failure to comply could result in severe personal injury, death, or substantial property damage.

Check inlet gas supply

NOTICE CSA or UL listed flexible gas connections are acceptable, but you must exercise caution to ensure that the line has adequate capacity to allow your boiler to fire at full rate. Consult with local codes for proper installation or service procedures.

⚠WARNING DO NOT adjust gas valve outlet pressure. The gas valve is factory-set for the correct outlet pressure. This setting is suitable for natural gas and propane, requiring no field adjustment. Attempting to alter the gas valve outlet pressure could result in damage to the valve, causing potential severe personal injury, death, or substantial property damage.

The gas piping must be sized for the proper flow and length of pipe, to avoid excessive pressure drop. Both the gas meter and the gas regulator must be properly sized for the total gas load.

If you experience a pressure drop greater than 1 inch w.c., the meter, regulator, or gas line is undersized or in need of service. Perform the steps below when checking inlet gas supply:

1. Shut OFF power at source.
2. Shut off gas supply at the manual gas valve in the gas piping to the appliance.
3. Loosen the set screw one (1) full turn from inside the pressure tap on top of the gas valve. Place the tubing of the manometer over the tap once the set screw is loosened as shown in FIG. 7-3.
4. Slowly turn on the gas supply at the field installed manual gas valve.
5. Turn ON power at source.
6. Press and hold the RIGHT and DOWN buttons simultaneously for five (5) seconds to place the boiler into Service Mode. In Service Mode, the boiler will fire at ignition speed and will then modulate up to full fire.
7. Observe the gas supply pressure as the burner fires at 100% of rated input. Percent of burner input will be displayed on the control panel.
8. Ensure inlet pressure is within specified range. Minimum and maximum gas supply pressures are specified in this section of the manual.
9. If gas supply pressure is within normal range and no adjustments are needed, proceed on to Step 10.
10. If the gas pressure is out of range, contact the gas utility, gas supplier, qualified installer or service agency to determine the necessary steps to provide proper gas pressure to the control.
11. Exit Service Mode.
12. Turn OFF power at source.

7 Gas connections *(continued)*

13. Shut off the gas supply at the manual gas valve in the gas piping to the appliance.
14. Remove the manometer from the pressure tap on top of the gas valve. Re-tighten the set screw inside the pressure tap.

⚠WARNING When re-tightening the set screw, be sure to tighten securely to prevent gas leaks.

Do not check for gas leaks with an open flame -- use the bubble test. Failure to use the bubble test or check for gas leaks can cause severe personal injury, death, or substantial property damage.

15. Turn on the gas supply at the manual gas valve.
16. Turn ON power at source.
17. Adjust the temperature set point on the control panel of the boiler control module to the desired water temperature so the appliance will call for heat.
18. Check burner performance by cycling the system while you observe burner response. The burner should ignite promptly. Flame pattern should be stable. Turn system off and allow burner to cool, then cycle burner again to ensure proper ignition and flame characteristics.

***Figure 7-3** Inlet Gas Supply Check*

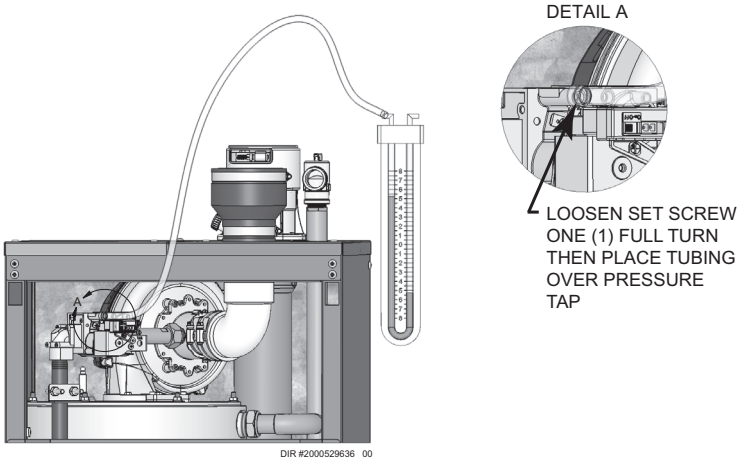

Gas Pressure

The gas pressure must remain between 4 inches w.c. (natural), 8 inches w.c. (LP) minimum and 14 inches w.c. (natural and LP) maximum during stand-by (static) mode and while in operating (dynamic) mode. If an in-line regulator is used, it must be a minimum of 10 feet from the Epic Fire Tube. It is very important that the gas line is properly purged by the gas supplier or utility company. Failure to properly purge the lines or improper line sizing, will result in ignition failure.

The problem is especially noticeable in NEW LP installations and also in empty tank situations. This can also occur when a utility company shuts off service to an area to provide maintenance to their lines.

Gas valve replacement

The gas valve MUST NOT be replaced with a conventional gas valve under any circumstances.

⚠WARNING Failure to follow all precautions could result in fire, explosion, or death!

⚠WARNING DO NOT adjust gas valve outlet pressure. The gas valve is factory-set for the correct outlet pressure. This setting is suitable for natural gas and propane, requiring no field adjustment. Attempting to alter the gas valve outlet pressure could result in damage to the valve, causing potential severe personal injury, death, or substantial property damage.

8 Field wiring

NOTICE For field wiring on Combi units, reference the Combi Installation and Service Manual provided with the unit.

⚠WARNING ELECTRICAL SHOCK HAZARD – For your safety, turn off electrical power supply before making any electrical connections to avoid possible electric shock hazard. Failure to do so can cause severe personal injury or death.

NOTICE Wiring must be N.E.C. Class 1.

If original wiring as supplied with boiler must be replaced, use only type 105°C wire or equivalent.

Boiler must be electrically grounded as required by National Electrical Code ANSI/NFPA 70 – latest edition.

⚠CAUTION Label all wires prior to disconnection when servicing controls. Wiring errors can cause improper and dangerous operation.

Figure 8-1 *Remove Metal Junction Box Cover*

Wall hung

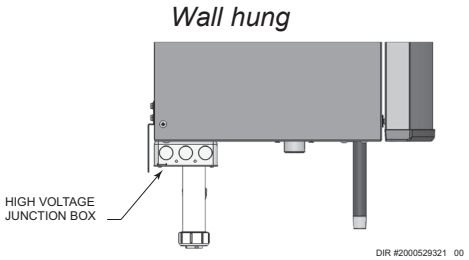

Floor standing

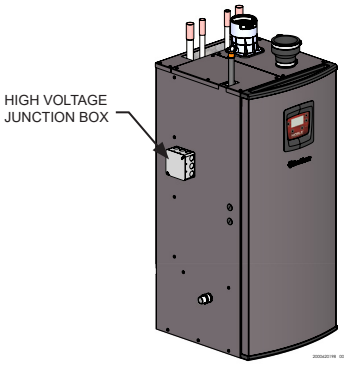

Figure 8-2A *Line Voltage Field Wiring Connections_Boiler Only*

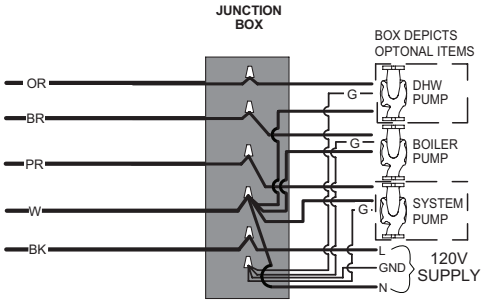

Note: Boiler pump is not optional on boiler models.

Figure 8-2B *Line Voltage Field Wiring Connections_ Combi Only*

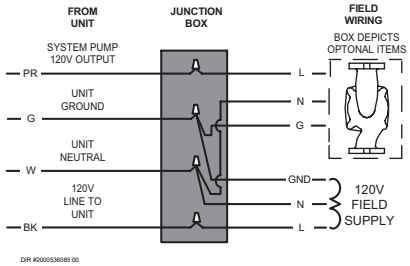

Installation must comply with:

1. National Electrical Code and any other national, state, provincial, or local codes, or regulations.
2. In Canada, CSA C22.1 Canadian Electrical Code Part 1, and any local codes.

Line voltage connections

1. Remove the cover of the metal junction box as shown in FIG. 8-1.
2. Connect 120 vac power wiring using wire nuts (field supplied) to the labeled line voltage terminal wires in the junction box.
3. Provide and install a fused disconnect or service switch (15 amp recommended) as required by the code.
4. Boiler Only: Wire the boiler pump as shown in FIG. 8-2A. When connecting a Domestic Hot Water (DHW) pump, connect the wiring as shown in FIG. 8-2A.
5. To activate a system pump, wire as shown in FIG.'s 8-2A and 8-2B. If the motor is larger than 2 amps, you must isolate with a relay.

8 Field wiring *(continued)*

Low voltage connections

1. Route all low voltage wires through the holes in the bottom front right side, just under the control panel, as shown in FIG. 8-3.
2. Connect low voltage wiring to low voltage connection board as shown in FIG.'s 8-4 and 8-5 on pages 56 and 57 of this manual and the boiler wiring diagram.

NOTICE Do not run low voltage wires next to high voltage wires in the same conduit.

Figure 8-3 *Routing Field Wiring*

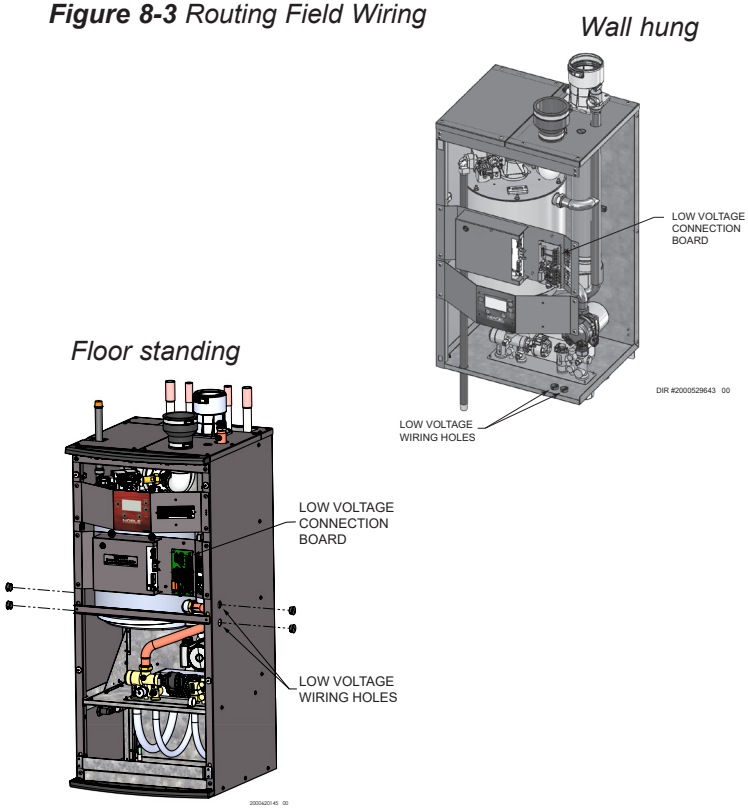

Thermostat (field supplied)

1. Connect the room thermostat or end switch (isolated contact only) to the room thermostat as shown in FIG.'s 8-4 and 8-5.
2. Install the thermostat on the inside wall, away from influences of drafts, hot or cold water pipes, lighting fixtures, televisions, sunlight or fireplaces.
3. Thermostat anticipator (if applicable):
   a. If connected directly to boiler, set for 0.1 amps.
   b. If connected to relays or other devices, set to match total electrical power requirements of connected devices. See device manufacturers' specifications and thermostat instructions for details.

Outdoor temperature sensor

In accordance with the United States Energy Policy and Conservation Act, this boiler is equipped with outdoor air reset, a feature that saves energy by reducing boiler water temperature as heating load decreases. To use this feature, the outdoor air sensor provided with the boiler must be properly installed.

1. Mount the sensor on an exterior wall, shielded from direct sunlight or flow of heat or cooling from other sources.
2. Route sensor wires through a designated wiring hole in the bottom front right side of the boiler (see FIG. 8-3).
3. Connect outdoor temperature sensor (FIG.'S 8-4 and 8-5) to the outdoor sensor terminals on the connection board to enable outdoor reset operation of the Epic Fire Tube.

Auxiliary limit switch

A field supplied auxiliary limit switch can be used for the gas pressure switch. When installing the auxiliary limit switch, please follow the kit instructions provided with the switch and then proceed as follows:

1. If the auxiliary switch is mounted to the exterior of the boiler, run the wires through a knockout in the bottom front right side of the boiler. If the auxiliary limit switch is mounted on the interior of the boiler, route the wires to the connection board.
2. Once the wires are inside the boiler and near the connection board, connect the wires to the auxiliary limit switch terminals.

Air handler contacts (Combi Only)

A set of un-powered contacts are available on the low voltage connection board (FIG. 8-5) that can be used to turn off the fan on an air handler when the diverter valve is in the DHW position and therefore not providing hot water to the space heating system. These contacts are normally open and will close when the diverter valve is in the space heat position.

System supply sensor

1. By installing the system supply sensor as shown in the Hydronic Piping section of this manual, the temperature of the primary supply can be controlled. The boiler control automatically detects the presence of this sensor, and controls the boiler firing rate to maintain the system supply temperature to the set point.

⚠CAUTION Do not install the system supply sensor into the system return.

2. The 100170581 sensor provided with the boiler must be used for the system sensor.
3. Connect the system supply sensor to these terminals (FIG.'s 8-4 and 8-5).

Wiring of the cascade

When wiring the boilers for Cascade operation, select one boiler as the Leader boiler. The remaining boilers will be designated as Members.

Connect the system supply sensor and outdoor air sensor (if used) to the Leader boiler. For the Cascade system to work properly the system supply sensor must be installed. The location of the system supply sensor should be downstream of the boiler connections in the main system loop. The system supply sensor should be wired to the Low Voltage Connection Board at the terminals marked for the system sensor (see FIG.'s 8-4 and 8-5). The Leader control will use the water temperature at the system supply sensor to control the operation of the Cascade.

8 Field wiring

Figure 8-4 *Low Voltage Field Wiring Connections_**BOILER ONLY***

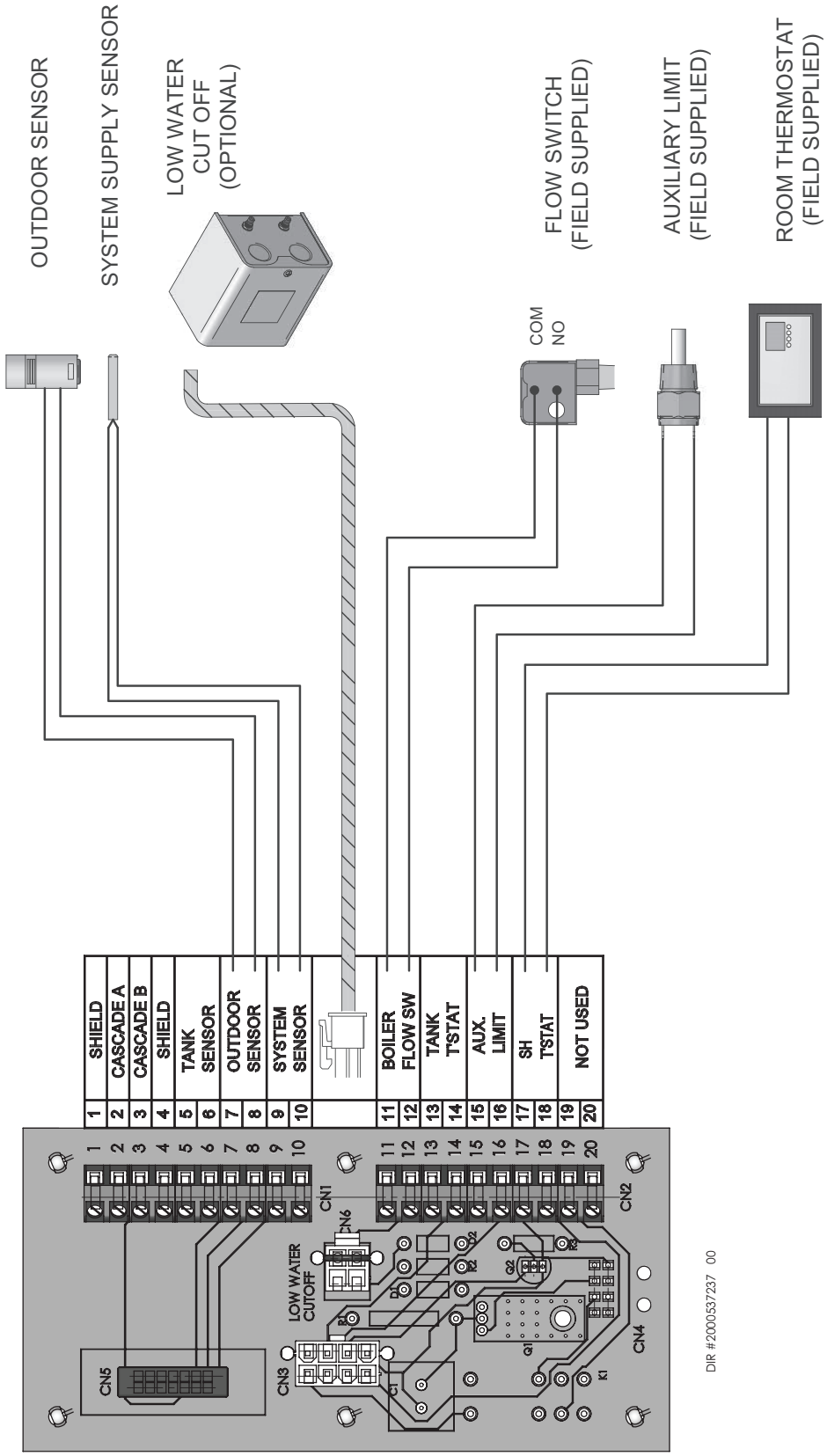

8 Field wiring *(continued)*

Figure 8-5 *Low Voltage Field Wiring Connections_**COMBI ONLY***

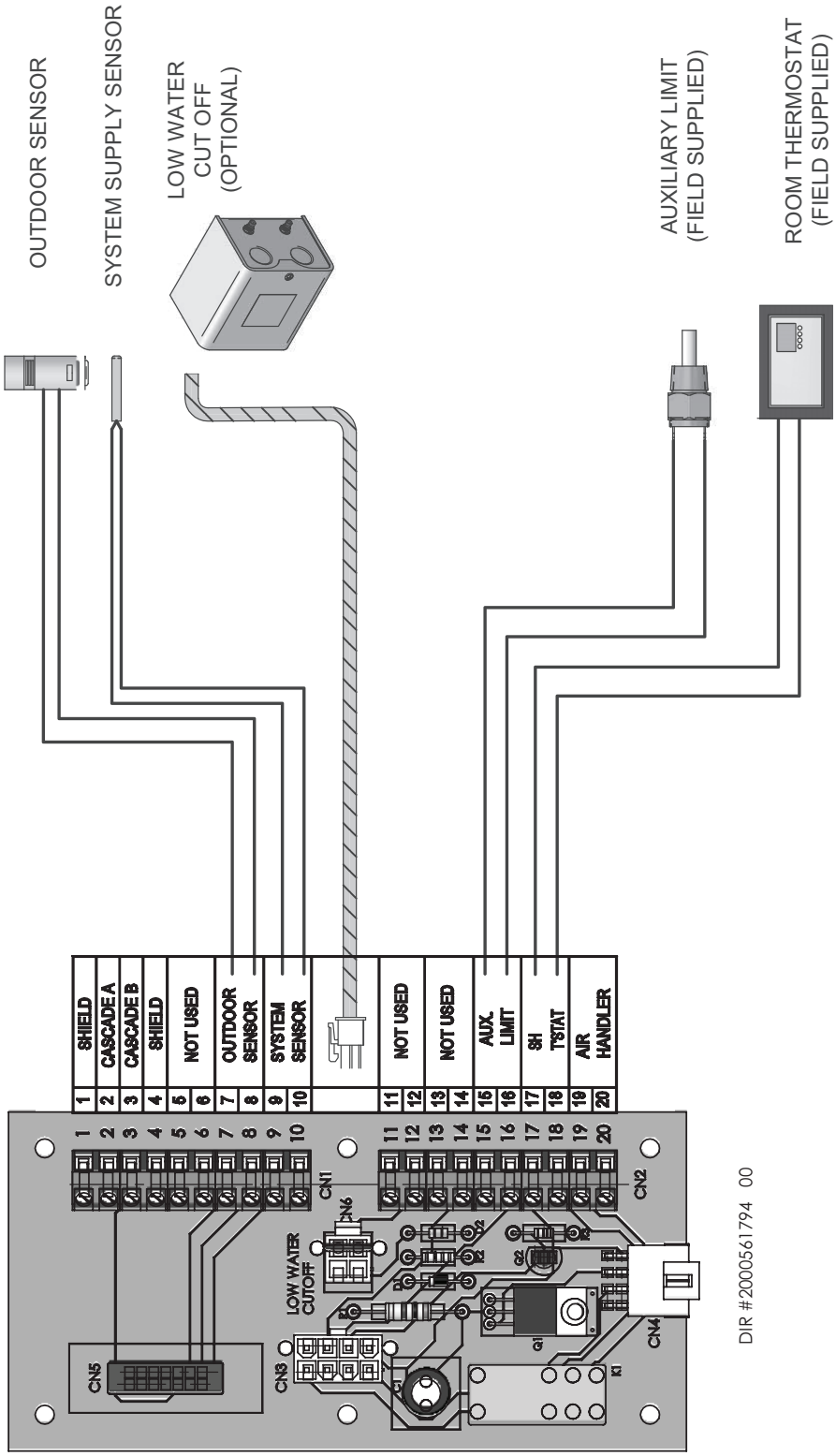

9 Condensate disposal

Condensate drain

1. This boiler is a high efficiency appliance that produces condensate.

2. The bottom of the boiler has a 3/4 inch pipe for connection of a 3/4 inch PVC pipe (FIG. 9-1).

3. Slope condensate tubing down and away from the boiler into a drain or condensate neutralizing filter. Condensate from the Epic Fire Tube will be slightly acidic (typically with a pH from 3 to 5). Install a neutralizing filter if required by local codes.

   A Neutralizer Kit is available from the factory.

4. Do not expose condensate line to freezing temperatures.

5. Use only plastic tubing or piping as a condensate drain line (FIG. 9-1).

NOTICE Use materials approved by the authority having jurisdiction. In the absence of other authority, PVC and CPVC pipe must comply with ASTM D1785 or D2845. Cement and primer must comply with ASME D2564 or F493. For Canada use CSA or ULC certified PVC or CPVC pipe, fittings, and cement.

NOTICE To allow for proper drainage on large horizontal runs, a second line vent may be required and tubing size may need to increase to 1 inch.

The condensate line must remain unobstructed, allowing free flow of condensate. If condensate is allowed to freeze in the line or if the line is obstructed in any other manner, condensate can exit from the boiler tee, resulting in potential water damage to property.

6. A condensate removal pump is required if the boiler is below the drain. When installing a condensate pump, select one approved for use with condensing boilers and furnaces. The pump should have an overflow switch to prevent property damage from condensate spillage.

Figure 9-1 *Condensate Disposal*

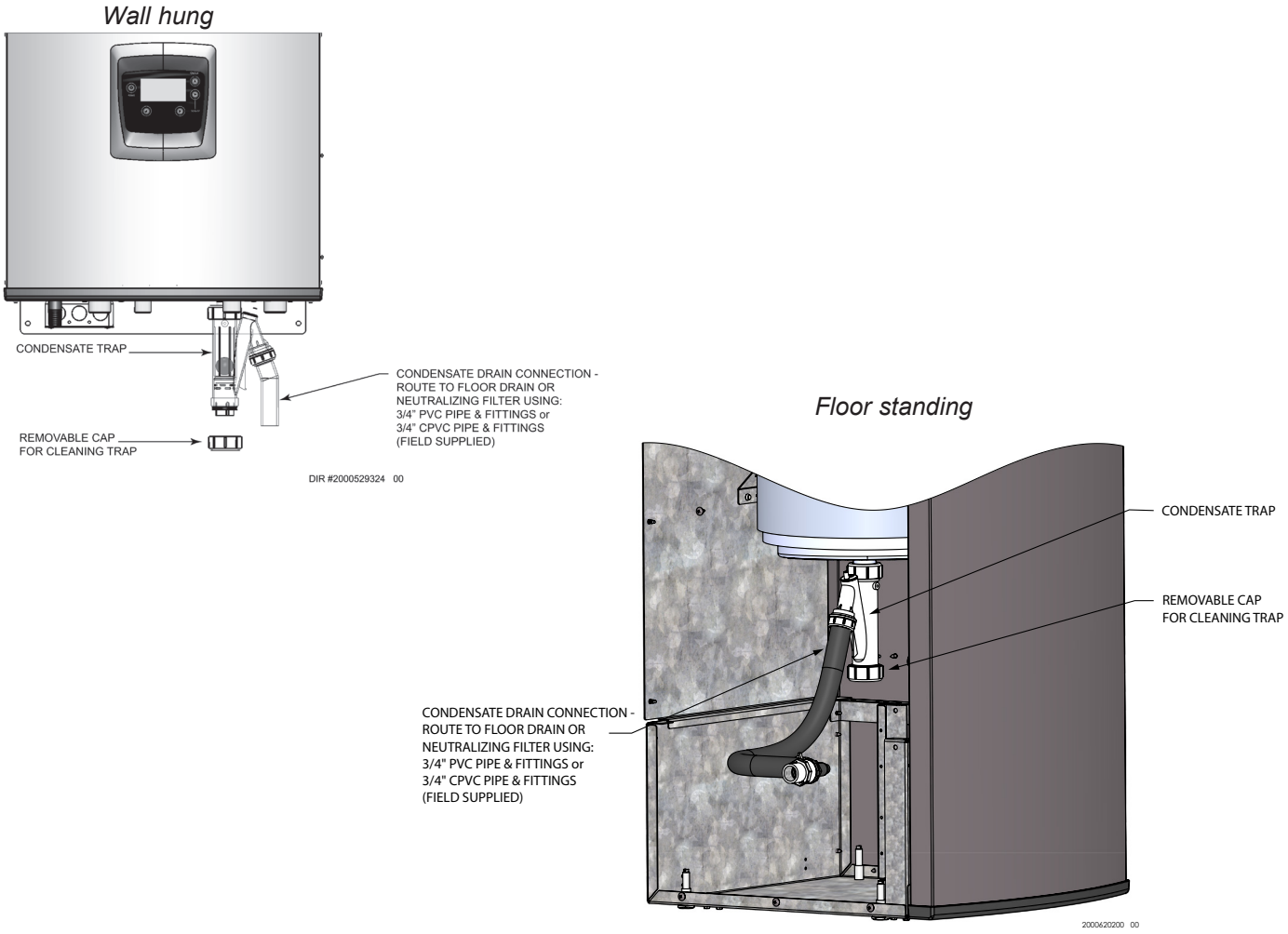

Note: The Epic Combi condensate trap is factory installed whereas the Epic Boiler condensate trap is factory supplied, but field installed.

10 Start-up

Pre-Commissioning Cleaning

1. Prior to fill and start-up, flush the entire heating system.
2. Clean the entire heating system with an approved pre-commissioning cleaner (comparable to Sentinel X300 or Fernox F3) in accordance with the manufacturer's recommendation to remove debris and prolong the life of the heat exchanger.
3. Clean all water filtering devices in the system.
4. Flush the cleaning solution out of the entire system and refill.

If PVC or CPVC venting is being installed

1. Do not apply power to the unit until primers and cements are cured.
2. Disconnect the ignition harness and ensure the gas valve is in the off position.
3. Allow the unit to run through 5 - 10 ignition cycles.
4. Turn off the power and reconnect ignition harness.

Fill water

Check/control fill water chemistry

IMPORTANT Conduct water quality testing prior to installing the appliance. Various solutions are available to adjust water quality.

The manufacturer recommends the following for properly filling your boiler with the appropriate water chemistry for closed loop boilers. Good fill water quality will help extend the life of the appliance by reducing the effects of lime scale buildup and corrosion in closed loop systems.

Hardness between 5 and 12 grains per gallon

1. Consult local water treatment companies for hard water areas (above 12 grains per gallon hardness).
2. Hardness levels that are above 12 grains/gallon can lead to lime scale buildup throughout the boiler system; these systems may require a water softener to ensure proper function of the unit. If the fill water is below 5 grains/gallons, usually due to use of a water softener, it is recommended to mix in some potable water at the inlet to increase the hardness of the water to above 5 grains/gallons.

pH between 6.5 and 8.5

1. pH levels below 6.5 can cause an increase in the rate of corrosion. pH of 8.5 or higher can potentially cause lime scale buildup.

Total Dissolved Solids (TDS) less than 350 ppm

1. Total dissolved solids are all minerals, salts, metals, and charged particles that are dissolved in water.
2. The greater the amounts of TDS present, the higher the corrosion potential due to increased conductivity in the water.

Chlorine concentration less than 150 ppm

1. Do not fill boiler or operate with water containing chlorine in excess of 150 ppm.
2. Filling with fresh drinking water should be acceptable.
3. Do not use the boiler to directly heat swimming pool or spa water.

Boiler water

⚠ CAUTION Do not use petroleum based cleaning or sealing compounds in the boiler system. Gaskets and seals in the system may be damaged. This can result in substantial property damage.

⚠ CAUTION DO NOT use "homemade cures" or "boiler patent medicines". Serious damage to boiler, personnel, and/or property may result.

Table 10A Boiler Water Chemistry

BOILER WATER CHEMISTRY	
Specification	**Range**
Dissolved Solids	< 2000 ppm
pH Level	6.5 to 9.5
Chloride	< 150 ppm

- Monitoring pH, chlorides, TDS, and hardness levels can prolong the life of the appliance by reducing lime scale buildup, corrosion, and erosion. Check for leaks to ensure that fresh water is not entering the system.
- Continual fresh makeup water will reduce boiler life.
- Mineral buildup in the heat exchanger reduces heat transfer, overheats the stainless steel heat exchanger, and causes failure.
- The addition of oxygen carried in by makeup water can cause internal corrosion in system components.
- Leaks in the boiler or piping must be repaired at once to prevent excessive makeup water. For this purpose, it is recommended to install a water meter to easily check the amount of makeup water entering the system. Makeup water volume should not exceed 5% of the total system volume per year. NOTE: When makeup water is added, make sure the chemical additives are added to maintain the correct level.
- An approved multi-metal corrosion inhibitor (comparable to Sentinel X100 or Fernox F1) is recommended at the correct concentration and in the manner recommended by the manufacturer.

Freeze protection fluids

⚠ WARNING Ethylene glycol is toxic, DO NOT use as your freeze protection fluid. Ethylene glycol has a sweet aroma which children and pets could mistake as food and ingest; leading to death.

10 Start-up

1. Use glycol only if needed for a freeze protection fluid.
2. Propylene glycol is the recommended freeze protection fluid.
3. Make sure to flush the boiler system before adding glycol.
4. Determine the freeze protection fluid quantity using system water content, following the fluid manufacturer's instructions. Boiler water content is listed on page 6. Remember to include expansion tank water content.
5. Local codes may require a backflow preventer or actual disconnect from city water supply.
6. When using freeze protection fluid with automatic fill, it is suggested to install a water meter to monitor water makeup. Freeze protection fluid may leak before the water begins to leak, causing the concentration to drop, which reduces the freeze protection level.
7. The freeze protection set points may be lowered when freeze protection fluid is used.
8. Consult the glycol manufacturer for details on the suggested mix of glycol and water for the desired freeze protection level and the de-rate effect it will have on the boiler output.

Test / replace freeze protection fluid

1. For systems using freeze protection fluids, follow the fluid manufacturer's instructions.
2. Freeze protection fluid must be replaced periodically due to degradation of inhibitors over time.
3. It is recommended to test the glycol concentration annually and adjust within the desired set points.

Oxygen prevention

CAUTION Eliminate all system leaks. Continual fresh makeup water will reduce boiler life. Minerals can build up in the heat exchanger, reducing heat transfer, overheating the heat exchanger, and causing heat exchanger failure.

Dissolved oxygen can have a negative effect on the boiler system. Oxygen can cause iron oxide to generate iron deposits. Oxygen may also increase the rate of corrosion on non-stainless steel parts of the system. A low pH level combined with oxygen further enhances its corrosive effects. After boiler installation, check for air leaks in the following areas:

- Suction gasket
- Pump
- Air valve
- O-ring gaskets

Precautions include installing a water meter to evaluate the fresh water volume entering the system (should be no more than 5% system volume). Additional volumes of fresh water could indicate that a leak is present.

Fill and test water system

1. Fill system only after ensuring the water meets the requirements of this manual.
2. Close automatic and manual air vents and boiler drain valve.
3. Fill to correct system pressure. Correct pressure will vary with each application.
   a. The minimum cold water fill pressure for a system is 12 psi.
   b. Pressure will rise when the boiler is turned ON and system water temperature increases.
4. At initial fill and during boiler startup and testing, check the system thoroughly for any leaks. Repair all leaks before proceeding further.

Purge air from water system

1. Purge air from system:
   a. Connect a hose to the purge valve. Route the hose to an area where water can drain and be seen.
   b. Close the boiler or system isolation valve between the purge valve and fill connection to the system.
   c. Close zone isolation valves.
   d. Open the quick-fill valve on the cold water makeup line.
   e. Open purge valve.
   f. Open the isolation valves one zone at a time. Allow water to run through the zone, pushing out the air. Run until no noticeable air flow is present. Close the zone isolation valves and proceed with the next zone. Follow this procedure until all zones are purged.
   g. Close the quick-fill water valve and purge valve and remove the hose. Open all isolation valves. Watch that system pressure rises to correct cold-fill pressure.
   h. After the system has operated for a while, eliminate any residual air by using the manual air vents located throughout the system.
   i. If purge valves are not installed in the system, open the manual air vents in the system one at a time, beginning with the lowest floor. Close the vent when water squirts out. Repeat with remaining vents.
2. Open the automatic air vent (diaphragm-type or bladder type expansion tank systems only) one turn.
3. Open other vents:
   a. Starting on the lowest floor, open air vents one at a time until water squirts out.
   b. Repeat with remaining vents.
4. Refill to correct pressure.

10 Start-up *(continued)*

Check for gas leaks

⚠WARNING Before starting the boiler, and during initial operation, smell near the floor and around the boiler for gas odorant or any unusual odor. Remove the front access panel and smell the interior of the boiler enclosure. Do not proceed with startup if there is any indication of a gas leak. Use an approved leak detection solution. Repair any leaks at once.

⚠WARNING DO NOT adjust gas valve outlet pressure. The gas valve is factory set for the correct outlet pressure. This setting is suitable for natural gas and propane, requiring no field adjustment. Attempting to alter the gas valve outlet pressure could result in damage to the valve, causing potential severe personal injury, death, or substantial property damage.

⚠WARNING Propane boilers only – Your propane supplier mixes an odorant with the propane to make its presence detectable. In some instances, the odorant can fade, and the gas may no longer have an odor. Before startup (and periodically thereafter), have the propane supplier verify the correct odorant level in the gas.

Check thermostat circuit(s)

1. Disconnect the external wire connected to the room thermostat terminal on the connection board.
2. Connect a voltmeter across these two incoming wires. Close each thermostat, zone valve, and relay in the external circuit one at a time and check the voltmeter reading across the incoming wires.
3. There should NEVER be a voltage reading.
4. If a voltage does occur under any condition, check and correct the external wiring. (This is a common problem when using 3-wire zone valves.)
5. Once the external thermostat circuit wiring is checked and corrected if necessary, reconnect the external thermostat circuit wires to the connection board.

Inspect condensate system

Inspect/check condensate lines and fittings

Inspect the condensate drain line, condensate PVC fittings and condensate trap (FIG. 10-1).

Clean/Inspect Trap Assembly

Remove the clean out cap on the bottom of the trap. Let the condensate and any debris drain out.

Figure 10-1 *Condensate Trap*

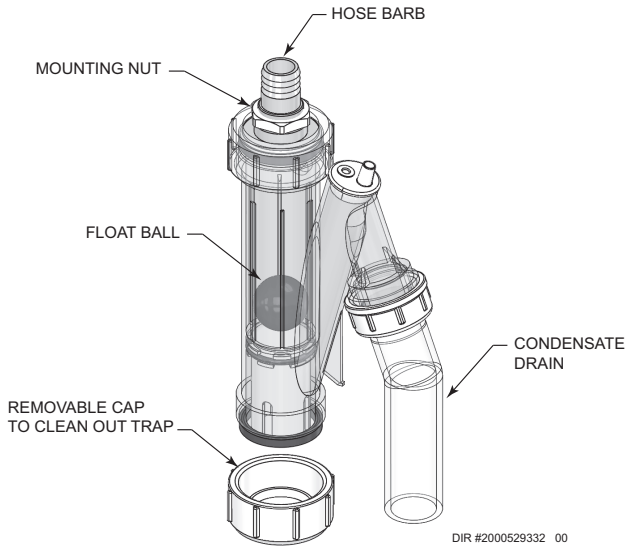

Note: Combi version shown for illustration purposes only. The Epic Combi condensate trap is factory installed whereas the Epic Boiler condensate trap is factory supplied, but field installed.

10 Start-up

Final checks before starting the boiler

- ❑ Read this manual to familiarize yourself with boiler control module operation. Reference page 63 for proper steps to start boiler.
- ❑ Verify the boiler and system are full of water and all system components are correctly set for operation.
- ❑ Verify the preparation procedures of Section 10, pages 59 - 61 have been completed.
- ❑ Verify electrical connections are correct and securely attached.
- ❑ Inspect vent piping and air piping for signs of deterioration from corrosion, physical damage or sagging. Verify air piping and vent piping are intact and correctly installed per this manual.

Start the boiler

1. Read and follow the Operating instructions in FIG. 10-2, page 63.

If boiler does not start correctly

1. Check for loose connections, blown fuse or service switch off?
2. Is boiler water temperature above 200°F?
3. Is thermostat set below room temperature?
4. Is gas turned on at meter or boiler?
5. Is incoming gas pressure less than 4 inches w.c.?

If none of the above corrects the problem, refer to the Troubleshooting Section.

Check system and boiler

❑ Check water piping

1. Check system piping for leaks. If found, shut down the boiler and repair immediately. (See WARNINGS on page 61 (startup) regarding failure to repair leaks.)
2. Vent any remaining air from the system using manual vents. Air in the system will interfere with circulation and cause heat distribution problems and noise.

❑ Check vent piping and air piping

1. Check for gastight seal at every connection, seam of air piping, and vent piping.

⚠WARNING Venting system must be sealed gastight to prevent flue gas spillage and carbon monoxide emissions, which will result in severe personal injury or death.

❑ Check gas piping

1. Check around the boiler for gas odor following the procedure on page 63 of this manual.

⚠WARNING If you discover evidence of any gas leak, shut down the boiler at once. Find the leak source with a bubble test and repair immediately. Do not start the boiler again until corrected. Failure to comply could result in severe personal injury, death, or substantial property damage.

❑ Propane boilers – verify conversion

1. Verify propane conversion has been completed per the Propane Conversion instructions.

⚠WARNING DO NOT adjust gas valve outlet pressure. The gas valve is factory-set for the correct outlet pressure. This setting is suitable for natural gas and propane, requiring no field adjustment. Attempting to alter the gas valve outlet pressure could result in damage to the valve, causing potential severe personal injury, death, or substantial property damage.

⚠WARNING Epic Fire Tubes are typically shipped ready to fire on natural gas. Check boiler rating plate to determine which fuel the boiler is set for. If set to natural gas, it may be converted to LP by installing an LP venturi (see page 12). In order to operate on LP gas, an LP venturi MUST BE installed. Failure to comply could result in severe personal injury, death, or substantial property damage.

10 Start-up *(continued)*

Figure 10-2 *Operating Instructions*

FOR YOUR SAFETY READ BEFORE OPERATING

WARNING: If you do not follow these instructions exactly, a fire or explosion may result causing property damage, personal injury, or loss of life.

A. This appliance does not have a pilot. It is equipped with an ignition device which automatically lights the burner. Do not try to light the burner by hand.

B. BEFORE OPERATING smell all around the appliance area for gas. Be sure to smell next to the floor because some gas is heavier than air and will settle on the floor.

WHAT TO DO IF YOU SMELL GAS

Do not try to light any appliance.

Do not touch any electric switch; do not use any phone in your building.

Immediately call your gas supplier from a neighbor's phone. Follow the gas supplier's instructions.

If you cannot reach your gas supplier, call the fire department.

C. Use only your hand to move the gas control switch. Never use tools. If the switch will not move by hand, don't try to repair it, call a qualified service technician. Force or attempted repair may result in a fire or explosion.

D. Do not use this appliance if any part has been under water. Immediately call a qualified service technician to inspect the appliance and to replace any part of the control system and any gas control which has been under water.

OPERATING INSTRUCTIONS

1. **STOP!** Read the safety information above on this label.
2. Set the thermostat to lowest setting.
3. Turn off all electric power to the appliance.
4. This appliance is equipped with an ignition device which automatically lights the burner. Do not try to light the burner by hand.
5. Remove front door.
6. Move switch to the "OFF" position.
7. Wait five (5) minutes to clear out any gas. If you then smell gas, **STOP!** Follow "B" in the safety information above this label. If you don't smell gas, go to next step.
8. Move the switch to the "ON" position.
9. Install front door.
10. Turn on all electric power to appliance.
11. Set thermostat to desired setting.
12. If the appliance will not operate, follow the instructions "To Turn Off Gas To Appliance" and call your service technician or gas supplier.

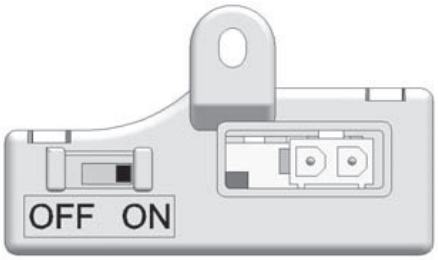

TO TURN OFF GAS TO APPLIANCE

1. Set the thermostat to lowest setting.
2. Turn off all electric power to the appliance if service is to be performed.
3. Remove front door.
4. Move switch to the "OFF" position.
5. Install front door.

LBL2339 REV B

10 Start-up

SMART CONTROL™ Epic Fire Tube control module

Use the control panel (FIG. 10-3) to set temperatures, operating conditions, and monitor boiler operation.

Figure 10-3 *Control Panel*

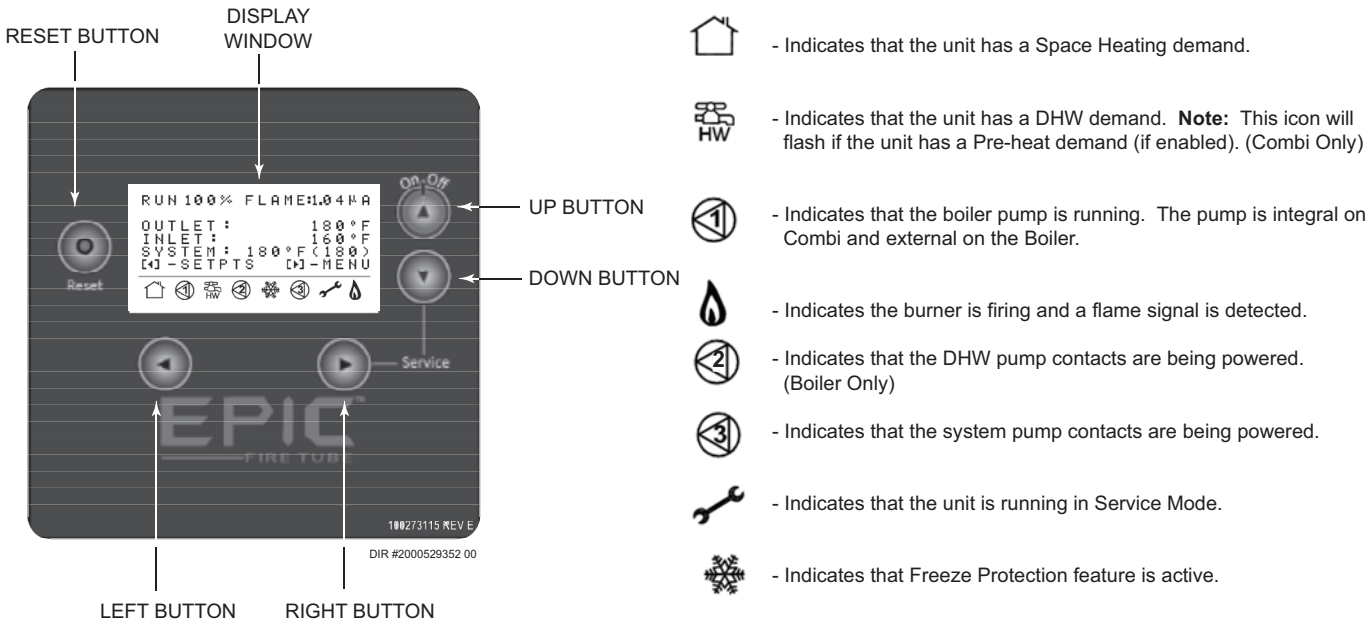

Home screen

The Home Screen can be used to view the current operating information of the Epic Fire Tube. The ▲ and ▼ buttons can be used to page through the screen sequence, displaying various operating statistics.

Figure 10-4 *Screen Sequence*

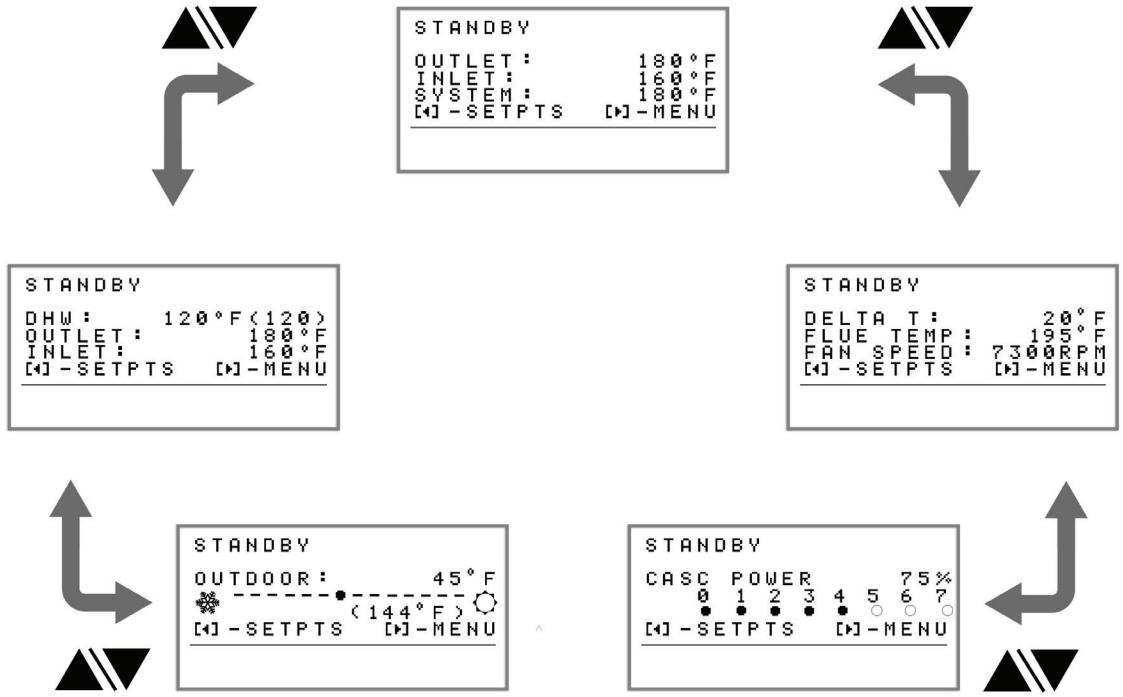

10 Start-up *(continued)*

Setup wizard

The Epic Fire Tube control has a Setup Wizard feature that can be used to help with the initial start-up of the unit. This Setup Wizard will walk an installer through the most commonly required parameters.

The Setup Wizard is automatically accessed the first time the unit is powered up from the factory and will allow setting of certain parameters without the need to enter the installer password. Once the Setup Wizard is completed or canceled, it can only be accessed again by going through the Installer Menu.

Figure 10-5 *Installer Menu*

```
SET-UP WIZARD
   TIME/DATE

10:06 AM 07/17/2015
  [▲/▼]-TO CHANGE
[◀]-SAVE/EXIT[▶]-NEXT
```

Button functions in the setup wizard

▲/▼ - Change value of current parameter
▶ - Move to the next parameter or finish Setup Wizard on last parameter
◀ - Save changes and exit the Setup Wizard. This will bypass the remaining parameters in the Wizard.

To exit the menu without saving changes, you must cycle power to the unit before exiting the menu.

Parameters in the setup wizard

- TIME/DATE
- SPACE HEAT SETPT (COLDEST DAY)
  - This is the space heating water temperature set point that will be used in Space Heating Mode. If outdoor reset is used, this parameter represents the water temperature on the reset curve corresponding to the coldest day outdoor temperature. When outdoor reset is in use, if outdoor temperature falls below the OUTDOOR TEMP COLDEST DAY parameter, space heating set point can go higher than this setting.
  - Range: 68°F – MAX SH SETPT (185°F by default)
  - Default: 125°F
- MAX SH SETPT
  - The MAX SH SETPT should be set to the highest space heating water set point that can be used for the specific space heating system. This parameter is the upper limit of what the user can adjust the SH SETPT (COLD DAY) parameter to. This parameter also serves as a limit of space heat set point that can be generated by the outdoor reset curve in the event that outdoor temperature falls below the coldest day outdoor temperature setting.
  - Range: 60°F – 190°F
  - Default: 185°F
- OUTDOOR TEMP COLDEST DAY
  - When outdoor reset is used, this is the outdoor temperature used on the reset curve corresponding to the SPACE HEAT SETPT (COLDEST DAY). This parameter should be set to the outdoor temperature used in the heat load calculation for the cold design day.
  - Range: -40°F – 75°F
  - Default: 10°F
- OUTDOOR TEMP – WARM WEATHER SHUTDOWN
  - When the outdoor temperature rises above this point, the control will block all space heating demands (DHW demands will still be active). Space heating operation will resume when outdoor temperature falls 10°F below this point.
  - Range: 32°F – 104°F
  - Default: 70°F
- AUTO RESET HI LIMIT
  - When the outlet temperature exceeds the Automatic Reset High Limit setting, automatic high limit action occurs. The boiler shuts down until the outlet water temperature cools below 10°F under this setting and a 60 second timer has elapsed. Note that this setting applies to both SH and DHW Modes.
  - Range: 32°F – 200°F
  - Default: 200°F
- MAN. RESET HI LIMIT
  - If the outlet temperature continues to increase after automatic reset high limit action, the Manual Reset High Limit action occurs when the outlet water temperature exceeds this setting. This will require a manual reset before operation can resume. Note that this setting applies to both SH and DHW Modes.
  - Range: 32°F – 210°F
  - Default: 210°F

10 Start-up

- DHW SETPT
  - This is the desired set point temperature of Domestic Hot Water (DHW) generated by the unit. Note that the required anti-scald mixing valve will likely require a setting greater than the desired DHW temperature.
  - Range: 60°F – MAX DHW SETPT
  - Default: 120°F

- DOMESTIC HOT WATER BOILER WATER TEMP (BOILER ONLY)
  - This is the desired temperature of the boiler water going to the indirect tank.
  - Range: 68°F – 190°F
  - Default: 180°F

- SPACE HEAT RATE LIMITING (COMBI ONLY)
  - This feature is used when the maximum space heating load is less than the maximum input rating of the unit. This setting will limit the maximum input rate of the unit for a space heating demand only (DHW demands will not be limited).
  - Range: 10% – 100%
  - Default: 100%

- COMBI PRE-HEAT (COMBI ONLY)
  - The Combi Pre-Heat function can be used to improve DHW performance and comfort by maintaining boiler water at an elevated temperature to be able to immediately serve a DHW demand. In certain applications, the Pre-Heat function can also reduce water usage compared to not using Pre-Heat. Enabling Pre-Heat, however, can increase fuel usage as the unit will periodically fire to maintain heated water.
  - Settings: ENABLED/DISABLED
  - Default: ENABLED

Service mode

⚠ WARNING Entering Service Mode will immediately cause the boiler to fire. Failure to ensure that the unit is fully assembled and installed and in safe working condition; including having properly installed venting, all air purged from the heat exchanger, and with proper water supply and flow, can result in serious injury, death, significant property damage, or destruction of the heater.

The Epic Fire Tube includes a Service Mode feature that can be used to force the unit to run at a particular firing rate. This feature can be used by qualified service technicians for adjusting combustion or troubleshooting the unit.

Service Mode can be accessed by holding ► and ▼ buttons simultaneously for 5 seconds.

Combi Models Only: In Service Mode, the unit will operate with the diverter valve in the space heating position; therefore, zone(s) in the heating system must be actively running in order to reject the heat generated.

Figure 10-6 *Service Menu*

```
SVC 100% FLAME:1.04µA
FAN SPD:5300RPM[▲/▼]
OUTLET: 180°F(185)
INLET:        160°F
FLUE TEMP:    175°F
[◄]-SETPTS   [►]-MENU
```

Button functions in Service Mode

▲/▼ - Change the target fan speed in increments of 100 rpm.
► - Toggle between operating at high fire and low fire.
◄ - Exit Service Mode and return to the Home Screen.

Check flame and combustion

1. Turn the main power off to the boiler.
2. Remove the flue plug from the vent pipe adapter. **Note:** Combustion measurements will be made at this point.

Figure 10-7 *Flue Plug Removal*

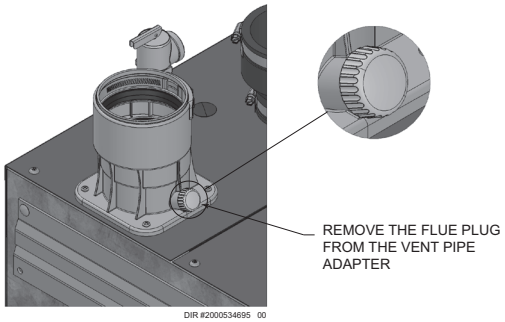

10 Start-up *(continued)*

3. Press the ▶ and ▼ buttons (simultaneously) for 5 seconds to enter Service Mode.
4. Insert the probe from a combustion analyzer into the hole on the vent adapter.
5. Once the boiler has modulated up to full fire, measure the combustion. The values should be in the range listed in Table 10A below. The CO levels shall be less than 200 ppm for a properly installed unit.

   If the combustion is not within the specified range, reference Section 13 - Troubleshooting for possible causes and corrective actions.

***Table 10A** Flue Products Chart*

Natural Gas				
Input Rate	Target		Range	
	CO_2	O_2	CO_2	O_2
High Fire	9.0%	4.9%	8.5% - 10.5%	2.3% - 5.7%
Low Fire	8.9%	5.4%	8.7% - 9.1%	5.1% - 5.7%
CO levels shall be less than 200 ppm.				

Propane				
Input Rate	Target		Range	
	CO_2	O_2	CO_2	O_2
High Fire	10.5%	4.9%	10.0% - 11.3%	4.1% - 5.6%
Low Fire	10.4%	5.4%	10.2% - 10.6%	5.1% - 5.7%
CO levels shall be less than 200 ppm.				

6. Once the combustion analysis is complete, exit Service Mode.
7. Turn the main power off to the boiler and replace the plug into the vent adapter.
8. Place the boiler back into normal operation.

⚠WARNING You must replace the flue gas plug on the universal adapter to prevent flue gas spillage into the room. Failure to comply could result in severe personal injury, death, or substantial property damage.

Set space heating operation

Determine controlling sensor

For space heating systems, the temperature control can be based on the outlet or if installed, the system supply sensor (factory supplied). The control will automatically switch to the system supply sensor once it is connected.

Verify space heat circulator operation

Note: Diverter valve used on Combi models only.

The Space Heating Mode controls the boiler pump and the diverter valve. When the boiler control receives a space heating call for heat and the boiler is not heating a DHW (Domestic Hot Water) call, and the set point is not met, it turns on the boiler pump and places the diverter valve in the space heating position. After the space heating call for heat ends, the boiler pump continues to run for a short period of time. This pump delay is factory set to 30 seconds. After this pump delay, the pump is turned off and the diverter valve is placed into the DHW position.

Set domestic hot water (DHW) operation

Verify DHW operation (Combi Only)

The DHW Heating Mode controls the boiler pump and the diverter valve. When the boiler control receives a DHW call for heat from the DHW flow switch, it turns on the boiler pump and puts the diverter valve in the DHW position to route boiler water through the brazed plate heat exchanger. During the call, the boiler control will modulate to maintain the DHW outlet temperature to the DHW set point.

After the DHW call for heat ends, the boiler pump continues to run for a short period of time. This pump delay is factory set to 30 seconds.

Verify DHW mode (Boiler Only)

There are two (2) modes of operation for DHW. In Normal Mode, when a DHW demand begins, the control will start the DHW pump, turn off the boiler pump (if running), and modulate to bring the outlet temperature to the DHW boiler set point. The maximum firing rate may be limited in this mode if desired.

In Zone Mode it is assumed that the indirect DHW tank is piped as a zone on the primary loop. When a DHW demand begins, the control will turn on the DHW pump output, and raise the system temperature set point to the DHW boiler set point (if higher). The boiler pump will be turned on.

Set DHW boiler target temperature (Boiler Only)

When in the DHW Mode, the control will modulate to maintain the boiler outlet temperature or system supply temperature to a set point. This set point is set at the factory to 180°F. If a different set point is desired, the appropriate parameter in the control must be changed.

11 Operating information

General

How the boiler operates

The Epic Fire Tube uses an advanced stainless steel heat exchanger and electronic control module that allows fully condensing operation. The blower pulls in air and pushes flue products out of the boiler through the heat exchanger and flue piping. The control module regulates blower speed to control the boiler firing rate. The gas valve senses the amount of air flowing into the boiler and allows only the right amount of gas to flow.

How the control module operates

The boiler control module receives inputs from boiler sensors and external devices. The control module activates and controls the blower and gas valve to regulate heat input. Switches the boiler pump on and off and controls the diverter valve as needed. The user programs the module to meet system needs by adjusting control parameters. These parameters set operating temperatures and boiler operating modes. Boiler operation can be based on boiler outlet water temperature or system supply temperature.

Menus

CAUTION Before changing parameters, note the settings so that the unit can be returned to its original operating parameters.

NOTICE Parameters will be automatically saved after menu timeout.

Set points menu (user access)

The Set Points Menu can be accessed by pressing the ◀ button.

Figure 11-1 Set Point Menu

```
STANDBY
   SET POINT MENU
SH SETPT (COLD DAY)
        180°F
   [▲/▼]-TO CHANGE
[◀]-SAVE/EXIT[▶]-NEXT
```

Button functions in the set points menu

▲/▼ - Change value of current parameter.
▶ - Move to the next parameter.
◀ - Save changes and exit the menu.

To exit the menu without saving changes, you must cycle power to the unit before exiting the menu.

Parameters in the set points menu:

- SH SETPT (COLD DAY)
  - Space heating water set point temperature, or the space heating water set point temperature when outdoor temperature is at the cold day setting if outdoor reset is used.
  - Range: 68°F – MAX SH SETPT
  - Default: 125°F
- DHW SETPT
  - This is the desired set point temperature of domestic hot water generated by the unit. Note that the required anti-scald mixing valve will likely require a setting greater than the desired domestic hot water temperature.
  - Range: 60°F – MAX DHW SETPT
  - Default: 120°F
- TEMPERATURE UNITS
  - This parameter can be used to select temperature units to be displayed on the screen (°F/°C)
- AUTO RESET HI LIMIT
  - When the outlet temperature exceeds the Automatic Reset High Limit setting, automatic high limit action occurs. The boiler shuts down until the outlet water temperature cools below 10°F under this setting and a 60 second timer has elapsed. Note that this setting applies to both SH and DHW Modes.
  - Range: 32°F – 200°F
  - Default: 200°F
- MAN. RESET HI LIMIT
  - If the outlet temperature continues to increase after automatic reset high limit action, the Manual Reset High Limit action occurs when the outlet water temperature exceeds this setting. This will require a manual reset before operation can resume. Note that this setting applies to both SH and DHW Modes.
  - Range: 32°F – 210°F
  - Default: 210°F

Installer menu (installer only access)

The Installer Menu can be accessed by pressing the ▶ button and then entering the installer password.

Figure 11-2 Installer Menu

```
STANDBY
    INSTALLER MENU
    ENTER PASSWORD
        5309
   [▲/▼]-TO CHANGE
[◀]-CANCEL   [▶]-NEXT
```

11 Operating information *(continued)*

Enter the installer password

To enter the installer password, use the ▲ and ▼ buttons to change the value of the first digit to 5, then press ► to move to the next digit. Repeat this process to fill in the remaining digits and enter the password 5-3-0-9. Once the final digit has been entered, press the ► button to access the installer menu.

Entering the installer password will allow future access to the installer menu without requiring the password for up to an hour after the last button is pressed.

Installer main menu

The Installer Menu is arranged in a menu/sub-menu structure to help with navigation to the desired settings. The installer main menu gives a list of available sub-menus.

Figure 11-3 *Installer Main Menu*

```
STANDBY
    INSTALLER MENU
    >GENERAL
     OUTDOOR RESET
     TIME/DATE
[◄] -SAVE/HOME [►]-SEL
```

Button functions in the installer main menu

▲/▼ - Move the cursor through the list of available sub-menus.
► - Access the currently selected sub-menu.
◄ - Save changes and exit the menu.

To exit the menu without saving changes, you must cycle power to the unit before exiting the menu.

Button functions in the installer sub-menus

▲/▼ - Change value of current parameter.
► - Move to next parameter or return to main menu on last parameter in the sub-menu.
◄ - Return to Main Menu or save all changes and return to Home Screen on the last parameter in the sub-menu.

To exit the menu without saving changes, you must cycle power to the unit before exiting the menu.

Note: Certain settings in the Installer Menu can be accessed in multiple sub-menus for ease of navigation. The Installer Menu also contains settings that can also be found in the Set Points Menu to allow full programming of the boiler within the Installer Menu.

Parameters in the installer menu:

- GENERAL Submenu
  - MAX SH SETPT – also found in OUTDOOR RESET Sub-menu
  - MAX DHW SETPT
  - AUTO RESET HI LIMIT – also found in Set Points Menu
  - MAN. RESET HI LIMIT – also found in Set Points Menu
  - SH MAX RATE LIMITING
  - SH/DHW SW TIME (Boiler Only)
  - DHW/SH SW TIME (Boiler Only)
  - DHW BLR WATER TEMP

  OUTDOOR RESET Sub-menu
  - SH SETPT (COLD DAY) – also found in Set Points Menu
  - MAX SH SETPT – also found in GENERAL Sub-menu
  - OUTDOOR TEMP COLDEST
  - WARM WEATHER SHUTDOWN
  - SHIFT RESET
  - OUTDOOR TEMP – WARM
  - SH SETPT (WARM DAY)
- TIME/DATE Sub-menu
- FAULT LOG
- SETPOINTS Sub-menu – Set Points Menu duplicate
  - SH SETPT (COLD DAY)
  - DHW SETPT
  - TEMPERATURE UNITS
- CASCADE Sub-menu
  - CASCADE ADDRESS
  - CASCADE TYPE – only available if address is 0
  - Boiler size settings – only available if address is 0
- ADVANCED COMBI Sub-menu (Combi Only)
  - DHW RESPOND TIME (Combi Only)
  - PRE-HEAT – (ENABLED/DISABLED) (Combi Only)
- DHW Submenu
  - DHW BLR WATER TEMP
  - DHW OPERATING MODE
- SET-UP WIZARD – Access Set-up Wizard after it has been completed.

Control inputs and outputs

Room thermostat

The room thermostat input tells the boiler to provide heat for space heating.

DHW Priority (Combi)

If a DHW call for heat is received while a Space Heating call is in progress, the control will start operating in DHW Mode to move the diverter valve to the DHW position. The control will not resume Space Heating operation until the DHW call has ended.

11 Operating information

DHW Priority (Boiler)

The Smart System control allows the connection of a DHW thermostat or tank sensor to the low voltage board. When a tank sensor is connected, the DHW thermostat input is ignored. The control will attempt to satisfy a DHW call before a concurrent space heating call; however, the unit will switch between SH and DHW calls according to the settings SH/DHW SW Time and DHW/SH SW Time.

Anti-cycling

After the burner turns off, the control will delay the next burner cycle for a set time period. The time delay will be bypassed if the inlet water temperature drops too far during the delay. On Combi only models, the anti-cycling delay does not apply to DHW calls for heat.

Modulation

The Epic Fire Tube is capable of modulating its firing rate from a minimum of 10% to a maximum of 100%. The firing rate is dictated by the call for heat (i.e., space heating or domestic hot water), the heating load, and various other temperature limitations.

Boiler outlet temperature sensor

The Epic Fire Tube is factory equipped with a boiler outlet temperature sensor which is also used as the limit sensor for the heater. During a space heat call for heat, the outlet temperature sensor is used to control modulation of the boiler unless a system supply sensor is field installed.

System supply temperature sensor

A factory supplied, but field installed system supply temperature sensor may be used with the Epic Fire Tube. When installed, this sensor is used to control modulation of the boiler during a space heat call for heating.

Boiler inlet temperature sensor

The Epic Fire Tube is factory equipped with a boiler inlet temperature sensor.

Combi DHW outlet temperature sensor (Combi Only)

The Epic Fire Tube is factory equipped with a combi DHW outlet temperature sensor. This sensor is used to control modulation of the boiler during a DHW call for heat. When this sensor is missing, limited operation in DHW Mode is possible by controlling the boiler outlet temperature to the DHW set point.

DHW flow switch (Combi Only)

The Epic Fire Tube is factory equipped with a DHW flow switch connected to the control that detects the presence of DHW water flow rates greater than 0.32 gpm. This input tells the boiler to provide heat for DHW heating.

Combi diverter valve (Combi Only)

The Epic Fire Tube is factory equipped with a diverter valve used to route boiler water to the heating system when in the Space Heating Mode or through the brazed plate heat exchanger when in DHW Mode. This diverter valve is normally in the DHW position, thus isolating the boiler from flow in the heating system.

Boiler pump control (Combi Only)

The Epic Fire Tube is factory shipped with an internal boiler pump used to generate flow for both space heating and DHW operation. The boiler pump will run whenever the burner is firing. The boiler pump will also run during Combi Pre-Heat Mode. The boiler pump will continue to run for a short time after the burner turns off, or the Combi Pre-Heat Mode ends.

System pump control (Combi Only)

The Epic Fire Tube is capable of controlling a field supplied and installed space heating system pump. The system pump will run whenever there is a space heating call for heat. The system pump will continue to run for a short time after the end of the heat demand.

Boiler and system pump control (Boiler Only)

The boiler pump will run whenever the burner is firing, unless the DHW is programmed for Normal Mode and the boiler is heating the DHW tank. It will continue to run for a short time after the burner turns off.

The system pump will run whenever there is a space heating call for heat demand. It may be programmed to run during a DHW call for heat when the DHW is programmed for Zone Mode. It will continue to run for a short time after the end of the heat demand. The system pump can be programmed to run continuously if desired, except during outdoor shutdown and/or a DHW call for heat.

A boiler pump is NOT supplied on boiler only models. On boiler only models the boiler pump generates flow only for space heating.

Gradient limiting

If during operation of the boiler the outlet water temperature is rising too quickly, the control will reduce the firing rate to its lowest setting.

SH rate limiting

The Epic Fire Tube includes an SH Rate Limiting feature that limits the maximum modulation during a space heating call.

11 Operating information *(continued)*

Outdoor air reset

The Epic Fire Tube uses an advanced non-linear outdoor reset curve to improve system efficiency by reducing the boiler water set point as the outdoor temperature warms up. The installer can set the reset curve by setting both the SH SETPT (COLD DAY) parameter to the water temperature required for the coldest design day outdoor temperature and the COLDEST OUTDOOR TEMP parameter to the coldest design day outdoor temperature. The installer should limit the maximum set point for the system using the MAX SH SETPT parameter. The user can adjust the SH SETPT (COLD DAY) parameter up to the MAX SH SETPT as needed to modify the reset curve. For advanced configuration, the installer can also adjust the warm day point on the curve using the installer menu, however because of the non-linear curve, these settings typically do not need to be adjusted.

With the outdoor air sensor connected, the control module will calculate the space heating demand water set point based on the programmed reset curve to automatically match the required heat load. For advanced configuration, the installer can also adjust the warm day point from the Installer Menu.

Outdoor Air Shutdown

Outdoor air shutdown specifies the outdoor air temperature at which the Space Heating demand is blocked. DHW demands will still be active. Space heating operation will resume once the outdoor temperature falls below 10°F less than the Outdoor Air Shutdown setting.

Space Heat Rate Limiting

Space Heat Rate Limiting can be used when the maximum required space heating load is lower than the maximum input rate of the unit. This feature limits the maximum input rate during a space heating demand to help keep the unit running at lower input rates. Space Heat Rate Limiting does not affect DHW operation.

Flame current support

To prevent nuisance shutdowns when the boiler is firing at low rates, the control will increase the firing rate when the flame signal drops too low.

Figure 11-4 *Outdoor Reset Curve*

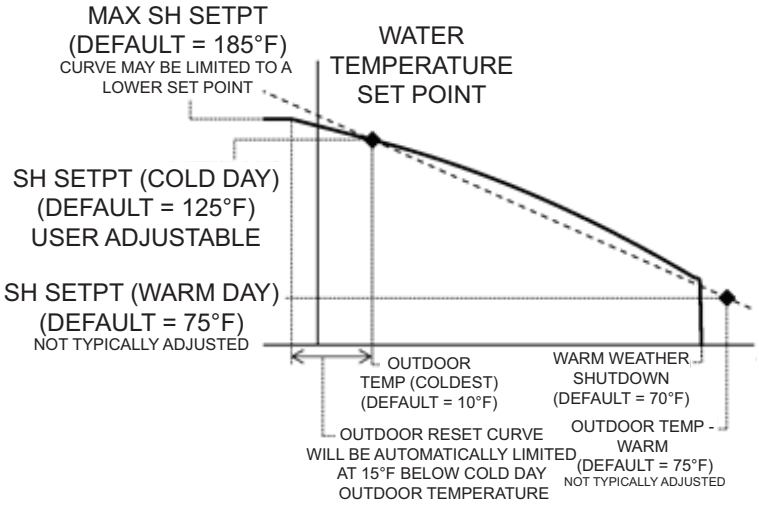

Combi Pre-Heat (Combi Only)

The Epic Fire Tube includes an optional Pre-Heat feature which is intended to maintain the boiler water temperature within a pre-defined range to improve the time it takes for the unit to supply heated DHW water. The Pre-Heat feature can also be used to satisfy low flow DHW demands or for heating water during DHW recirculation where flows through the unit may be less than the setting of the flow switch. The Pre-Heat feature will first try to satisfy these demands using the integral boiler pump before firing. Pre-heat operation will be indicated on the display by a flashing DHW icon. When the unit fires for a Pre-Heat demand, it will immediately ramp to low fire. Pre-Heat demands will only occur when no other heating demand is present.

DHW Respond (Combi Only)

The Epic Fire Tube includes a DHW respond feature to help eliminate cold water sandwich issues associated with repeated DHW demands. After any DHW demand, the unit will go into pre-purge for a pre-determined time after post-purge has ended. If a new demand occurs during this DHW respond time, the unit will be able to immediately enter ignition, reducing the time it takes for the unit to respond to the subsequent demand. DHW respond time can be set by the installer for a duration of 0 minutes (disabled) up to 15 minutes.

11 Operating information

Cascade

When multiple Epic Fire Tubes are installed, they can be wired together in a Cascade sequence. A maximum of eight (8) boilers can be controlled from a single control. In this application one boiler would be designated as the Leader control and all others would be designated as Member controls. The Leader control can be programmed to use Lead/Lag or Efficiency Optimization control methods. Epic Fire Tubes can only control Space Heating demands in Cascade. An Epic Fire Tube in a Cascade must have its own DHW circuit, as DHW will be controlled individually.

Once the Leader receives a call for heat from a room thermostat, the control will determine what the set point will be. If outdoor air reset is desired, connect the outdoor air sensor to the terminals on the Low Voltage Connection Board on the Leader boiler. The set point will be calculated based on the programmed reset curve of the Leader. If the water temperature at the system supply sensor is less than the set point – 10°F, then the control will initiate a call for heat on the Cascade.

When an Epic Fire Tube in a Cascade receives a DHW call for heat, it will be taken out of the Cascade to satisfy its own DHW demand. Once its DHW demand has ended, it will be put back into the Cascade.

To equalize the run time of all boilers on the Cascade, the firing sequence will automatically be changed at set intervals.

Protection features

Outlet temperature, flue temperature, and temperature rise limiting

The outlet temperature is monitored by the boiler outlet temperature sensor. When the outlet temperature exceeds 185°F, the unit will reduce the maximum fan speed. If the outlet water temperature exceeds 195°F the control will shut the unit down until it cools off.

The control module monitors the flue temperature by a sensor located in the flue exhaust. If the flue temperature exceeds 215°F the control will reduce the maximum fan speed. If the flue temperature exceeds 240°F the control will shut the unit down. The unit will restart automatically once the flue temperature drops 25°F and the minimum off time has expired.

The control module monitors the change in the temperature after the burner fires to ensure that the flue sensor is properly installed. In the event that the control module does not detect the required change in the temperature, modulation will be limited to 50% or less. Once the required flue temperature change is observed, the boiler will be allowed to modulate above 50% on the next call for heat or after the ● (RESET) button is pressed.

The control monitors the temperature difference between the inlet and the outlet sensor. If this difference exceeds 55°F the control will reduce the maximum fan speed. If the temperature difference exceeds 60°F the control will shut the unit down. The unit will restart automatically once the temperature difference has dropped below 55°F and the minimum off time has expired.

The following integral feature of the boiler control module provides some protection for the boiler only -- not for the system.

The boiler control module provides a freeze protection feature with the following attributes:

- Below an inlet temperature of 45°F, the boiler pump operates constantly.
- Below an inlet temperature of 37°F, the burner fires.
- Boiler and pumps turn off if boiler water inlet temperature rises above 45°F.

Neither this feature, the boiler control module, nor the use of glycol, eliminates the possibility of freezing. The installation must still use recognized design, installation, and maintenance practice to prevent freeze potential for the boiler and system.

The Freeze Protection feature will not work if the appliance does not have power, is locked out, is in shutdown mode, had a component failure, or is otherwise prevented from firing.

NOTICE When system return temperatures are maintained below the dew point, condensation will form on the inside of the boiler jacket causing some internal sheet metal components to rust.

11 Operating information *(continued)*

Low voltage blocking

The blower and gas valve require a minimum amount of voltage in order to operate properly. If an ignition attempt is made when the line voltage is temporarily low (such as during a brownout), the control could enter a manual reset lockout. To prevent this, the control monitors the voltage and blocks any heat demands until the voltage returns to an acceptable level.

Monitor external limits

Connections are provided on the connection board for external limits such as a low water cutoff and AUX limit. The boiler control will shut off the burner and inhibit relighting whenever any of these external limits open.

Error logging

The control will hold the last 10 lockouts in memory. The date and time of the occurrence will be recorded as well. Only the 10 most current occurrences will be held in memory.

Space heat temperature regulation

Operating temperature (target)

The boiler control module senses water temperature and regulates boiler firing rate to achieve a target temperature. The target temperature is calculated as described in this section under *"Outdoor Reset Operation"* when the outdoor sensor is connected. The maximum target temperature can be limited by the installer using the MAX SH SETPT. This temperature can be set between 32°F and 190°F. If the outdoor sensor is shorted or not properly installed, the target temperature is fixed at the SH SETPT (Cold Day).

High limit operations

The Epic Fire Tube is equipped with an adjustable automatic reset high limit and a manual reset high limit. The automatic reset high limit has a maximum set point of 200°F and the manual reset high limit has a maximum set point of 210°F.

Low water cutoff protection

1. The boiler control module uses temperature sensing of both supply and return ports of the heat exchanger. If the flow rate is too low or the outlet temperature too high, the control module modulates and shuts the boiler down. This ensures boiler shutdown in the event of low water or low flow conditions.
2. Some codes and jurisdiction may accept these integral features of the control in lieu of requiring an additional limit control or low water cutoff. Consult local jurisdiction to determine. A low water cutoff is available from the factory (100208652).

11 Operating information

Sequence of operation

OPERATION	DISPLAY
1. Upon a call for heat, the control turns on the appropriate pumps. The LWCO must close.	STANDBY OUTLET: 124°F INLET: 109°F SYSTEM: 117°F(118) [◄] - SETPTS [►] - MENU
2. Once the LWCO has closed, the auxiliary limit switch must close.	START OUTLET: 124°F INLET: 109°F SYSTEM: 117°F(118) [◄] - SETPTS [►] - MENU
3. The control starts the pre-purge cycle by initiating the blower.	PRE-PURGE OUTLET: 124°F INLET: 109°F SYSTEM: 117°F(118) [◄] - SETPTS [►] - MENU
4. The control starts the trial for ignition by firing the spark electrode and opening the gas valve.	IGITION OUTLET: 124°F INLET: 109°F SYSTEM: 117°F(118) [◄] - SETPTS [►] - MENU
5. If flame is not detected after the sparking ends, the control will perform a postpurge, then start another prepurge cycle and try to light the burner again. The control will perform a total of 4 attempts before locking out.	POST-PURGE OUTLET: 124°F INLET: 109°F SYSTEM: 117°F(118) [◄] - SETPTS [►] - MENU

11 Operating information *(continued)*

Sequence of operation *(continued)*

OPERATION	DISPLAY
6. If flame is detected, it holds the firing rate steady for a few seconds to let the flame stabilize, then it begins to modulate the firing rate based on a set point or some other command.	RUN 41% FLAME:10.4µA OUTLET: 124°F INLET: 109°F SYSTEM: 117°F(118) [◄]-SETPTS [►]-MENU
7. **Combi Models Only:** If the space heating call for heat is active and the DHW flow switch starts a DHW call for heat, the diverter valve will move to the DHW position and the boiler will switch to the DHW Mode. This will divert the boiler's outlet water from the heating system to the brazed plate heat exchanger. The control will then modulate to maintain the DHW outlet temperature at the DHW set point. **Boiler Models Only:** If the space heating call for heat is active, and the tank thermostat or sensor starts a DHW call for heat, the boiler will switch to the DHW mode. If programmed for normal DHW operation (not as a zone), the DHW pump will turn on first, then the boiler pump will turn off (boiler and DHW pump operation briefly overlap to ensure flow is maintained through the unit). This will divert the boiler's outlet water from the heating system and send it to the tank coil instead. The control will then modulate to maintain the outlet temperature to the DHW boiler set point.	RUN 41% FLAME:10.4µA DWH: 124°F(130) OUTLET: 124°F INLET: 109°F [◄]-SETPTS [►]-MENU HW
8. Once all calls for heat are satisfied, the control will turn off the burner. The blower will continue to run during the postpurge period.	POST-PURGE ANTI-CYCLING OUTLET: 124°F INLET: 109°F SYSTEM: 117°F [◄]-SETPTS [►]-MENU
9. Any pumps that are running will continue to run for their respective pump delay times before turning off. A 60 second anti-cycle period will start, which will delay any new space heating call for heat until it times out.	BLOCKED ANTI-CYCLING OUTLET: 124°F INLET: 109°F SYSTEM: 117°F [◄]-SETPTS [►]-MENU
10. In Standby, ready to start a new cycle.	STANDBY OUTLET: 124°F INLET: 109°F SYSTEM: 117°F [◄]-SETPTS [►]-MENU

12 Maintenance

Maintenance and annual startup

Table 12A *Service and Maintenance Schedules*

Service technician (see the following pages for instructions)	
ANNUAL START-UP	**General:** • Address reported problems • Inspect interior; clean and vacuum if necessary; • Clean condensate trap • Check for leaks (water, gas, flue, condensate) • Verify flue and air lines in good condition and sealed tight • Check system water pressure/system piping/expansion tank • Check fill water meter • Test boiler water. When test indicates, clean system water with approved system restorer following manufacturer's information. • Check control settings • Check ignition electrodes (sand off any deposits; clean and reposition) • Check wiring and connections • Perform combustion start-up checkout and performance verification per Section 10 of this manual (CO levels shall be less than 200 ppm). • Flame inspection (stable, uniform) • Flame signal (at least 10 microamps at high fire) • Clean the heat exchanger if flue temperature is more than 54°F above return water temperature. • Inspect and clean the DHW flow switch filter and sanitary bypass filter in the Combi waterset. • Check venturi flapper for free motion. **If combustion or performance indicate need:** • Clean heat exchanger • Remove and clean burner using compressed air only

Owner maintenance (see the Epic Fire Tube User's Information Manual for instructions)	
Daily	• Check boiler area • Check pressure/temperature gauge
Monthly	• Check vent piping • Check air piping • Check air and vent termination screens • Check relief valve • Check condensate drain system • Check air vents
Periodically	• Test low water cutoff (if used) • Reset button (low water cutoff) • If hard water is on the higher side of the specified range of grains per gallon, inspect and clean the DHW flow switch filter and sanitary bypass filter in the Combi waterset.
Every 6 months	• Check boiler piping (gas and water) for leaks • Operate relief valve
End of season months	• Shut boiler down (unless boiler used for domestic hot water)

12 Maintenance *(continued)*

⚠WARNING Follow the Service and maintenance procedures given throughout this manual and in component literature shipped with the boiler. Failure to perform the service and maintenance could result in damage to the boiler or system. Failure to follow the directions in this manual and component literature could result in severe personal injury, death, or substantial property damage.

⚠WARNING The boiler should be inspected annually only by a qualified service technician. In addition, the maintenance and care of the boiler designated in Table 12A and explained on the following pages must be performed to assure maximum boiler efficiency and reliability. Failure to service and maintain the boiler and system could result in equipment failure.

⚠WARNING Electrical shock hazard – Turn off power to the boiler before any service operation on the boiler except as noted otherwise in this instruction manual. Failure to turn off electrical power could result in electrical shock, causing severe personal injury or death.

Address reported problems

1. Inspect any problems reported by the owner and correct before proceeding.

Inspect boiler area

1. Verify that boiler area is free of any combustible materials, gasoline and other flammable vapors and liquids.
2. Verify that air intake area is free of any of the contaminants listed in Section 1 of this manual. If any of these are present in the boiler intake air vicinity, they must be removed. If they cannot be removed, reinstall the air and vent lines per this manual.

Inspect boiler interior

1. Remove the front access cover and inspect the interior of the boiler.
2. Vacuum any sediment from inside the boiler and components. Remove any obstructions.

Clean condensate trap

1. Remove the clean out cap on the bottom of the trap. Let the condensate and any debris drain out.
2. Replace the clean out cap and resume operation.

Figure 12-1 *Condensate Trap*

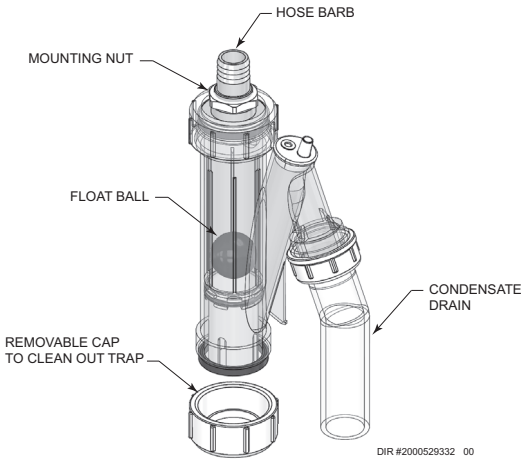

Note: Combi version shown for illustration purposes only.

Check all piping for leaks

⚠WARNING Eliminate all system or boiler leaks. Continual fresh makeup water will reduce boiler life. Minerals can build up in tubes, reducing heat transfer, overheating heat exchanger, and causing heat exchanger failure. Leaking water may also cause severe property damage.

1. Inspect all water and gas piping and verify to be leak free.
2. Look for signs of leaking lines and correct any problems found.
3. Check gas line using the procedure found in Section 7 - Gas Connections.

Flue vent system and air piping

1. Visually inspect the entire flue gas venting system and air piping for blockage, deterioration or leakage. Repair any joints that show signs of leakage. Verify that air inlet pipe is connected and properly sealed.
2. Verify that boiler vent discharge and air intake are clean and free of obstructions.
3. Verify the venturi is freely moving and does not have any sticky residue on the flapper. If necessary, clean surface with a non-abrasive bristle brush and alcohol; make sure to remove any excess alcohol before reinstalling.

⚠WARNING Failure to inspect for the above conditions and have them repaired can result in severe personal injury or death.

Check water system

1. Verify all system components are correctly installed and operational.
2. Check the cold fill pressure for the system. Verify it is correct (must be a minimum of 12 psi).
3. Watch the system pressure as the boiler heats up (during testing) to ensure pressure does not rise too high. Excessive pressure rise indicates expansion tank sizing or performance problem.
4. Inspect air vents and air separators. Remove air vent caps and briefly press push valve to flush vent. Replace caps. Make sure vents do not leak. Replace any leaking vents.

Check expansion tank

1. Expansion tanks provide space for water to move in and out as the heating system water expands due to temperature increase or contracts as the water cools. Tanks may be open, closed or diaphragm or bladder type. See Section 6 - Hydronic Piping for suggested best location of expansion tanks and air eliminators.

12 Maintenance

Check fill water meter

1. Check fill water meter for water usage. If the amount exceeds 5% of your system volume, you could have a leak. Have the system checked for leaks and fixed by a qualified service technician.

Test boiler water

1. Test boiler water. Reference the Epic Installation and Service Manual for guidelines. When test indicates, clean system water with approved system restorer following the manufacturer's information.

Check boiler relief valve

1. Inspect the relief valve and lift the lever to verify flow. Before operating any relief valve, ensure that it is piped with its discharge in a safe area to avoid severe scald potential. Read Section 6A - Hydronic Piping before proceeding further.

⚠WARNING Following installation, the valve lever must be operated AT LEAST ONCE A YEAR to ensure that waterways are clear. Certain naturally occurring mineral deposits may adhere to the valve, rendering it inoperative. When manually operating the lever, water will discharge and precautions must be taken to avoid contact with hot water and to avoid water damage. Before operating lever, check to see that a discharge line is connected to this valve directing the flow of hot water from the valve to a proper place of disposal. Otherwise severe personal injury may result. If no water flows, valve is inoperative. Shut down the boiler until a new relief valve has been installed.

⚠WARNING Safety relief valves should be re-inspected AT LEAST ONCE EVERY THREE YEARS, by a licensed plumbing contractor or authorized inspection agency, to ensure that the product has not been affected by corrosive water conditions and to ensure that the valve and discharge line have not been altered or tampered with illegally. Certain naturally occurring conditions may corrode the valve or its components over time, rendering the valve inoperative. Such conditions are not detectable unless the valve and its components are physically removed and inspected. This inspection must only be conducted by a plumbing contractor or authorized inspection agency – not by the owner. Failure to re-inspect the boiler relief valve as directed could result in unsafe pressure buildup, which can result in severe personal injury, death, or substantial property damage.

2. After following the warning directions in this manual, if the relief valve weeps or will not seat properly, replace the relief valve. Ensure that the reason for relief valve weeping is the valve and not over-pressurization of the system due to expansion tank waterlogging or undersizing.

Inspect ignition / flame sense electrodes

1. Remove the ignition / flame sense electrode from the boiler heat exchanger access cover.
2. Remove any deposits accumulated on the ignition/flame sense electrode using sandpaper. If the electrode cannot be cleaned satisfactorily, replace the ignition/flame sense electrode with a new one.
3. Replace ignition/flame sense electrode, making sure gasket is in good condition and correctly positioned.

Check ignition ground wiring

1. Inspect boiler ground wire from the heat exchanger access cover to ground terminal strip.
2. Verify all wiring is in good condition and securely attached.
3. Check ground continuity of wiring using continuity meter.
4. Replace ground wires if ground continuity is not satisfactory.

Check all boiler wiring

1. Inspect all boiler wiring, making sure wires are in good condition and securely attached.

Check control settings

1. Set the boiler control module display to Parameter Mode and check all settings. Adjust settings if necessary. See Section 11 - Operating Information for adjustment procedures.
2. Check settings of external limit controls (if any) and adjust if necessary.

Perform start-up and checks

1. Start boiler and perform checks and tests specified in Section 10 - Start-up.
2. Verify cold fill pressure is correct and that operating pressure does not go too high.

Check burner flame

1. Inspect flame through observation window.
2. If the flame is unsatisfactory at either high fire or low fire, turn off boiler and allow boiler to cool down. Remove the burner and clean it thoroughly using a vacuum cleaner or compressed air. Do not use compressed air to clean burner if performed inside a building.
3. Remove the burner, reference FIG. 12-2 (page 79).
4. When replacing the burner, ensure gasket is in good condition and positioned correctly (FIG. 12-2).

12 Maintenance *(continued)*

Figure 12-2 *Burner Assembly*

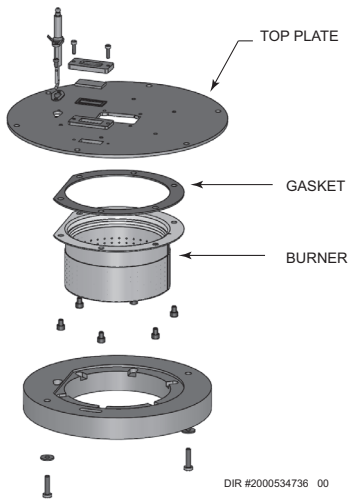

Check flame signal

1. At high fire the flame signal shown on the display should be at least 10 microamps.

2. A lower flame signal may indicate a fouled or damaged ignition / flame sense electrode. If cleaning the ignition/ flame sense electrode does not improve, ground wiring is in good condition, and ground continuity is satisfactory, replace the ignition / flame sense electrode.

3. See Section 13 - Troubleshooting for other procedures to deal with low flame signal.

Review with owner

1. Review the Epic Fire Tube User's Information Manual with the owner.

2. Emphasize the need to perform the maintenance schedule specified in the Epic Fire Tube User's Information Manual (and in this manual as well).

3. Remind the owner of the need to call a licensed contractor should the boiler or system exhibit any unusual behavior.

4. Remind the owner to follow the proper shutdown procedure and to schedule an annual start-up at the beginning of the next heating season.

Handling ceramic fiber materials

REMOVAL OF COMBUSTION CHAMBER LINING

⚠WARNING The combustion chamber insulation in this appliance contains ceramic fiber material. Ceramic fibers can be converted to cristobalite in very high temperature applications. The International Agency for Research on Cancer (IARC) has concluded, "Crystalline silica inhaled in the form of quartz or cristobalite from occupational sources is carcinogenic to humans (Group 1)." Normal operating temperatures in this appliance are below the level to convert ceramic fibers to cristobalite. Abnormal operating conditions would have to be created to convert the ceramic fibers in this appliance to cristobalite.

The ceramic fiber material used in this appliance is an irritant; when handling or replacing the ceramic materials it is advisable that the installer follow these safety guidelines.

- Avoid breathing dust and contact with skin and eyes.
  - Use NIOSH certified dust respirator (N95). This type of respirator is based on the OSHA requirements for cristobalite at the time this document was written. Other types of respirators may be needed depending on the job site conditions. Current NIOSH recommendations can be found on the NIOSH website at http://www.cdc.gov/niosh/homepage.html. NIOSH approved respirators, manufacturers, and phone numbers are also listed on this website.
  - Wear long-sleeved, loose fitting clothing, gloves, and eye protection.
- Apply enough water to the combustion chamber lining to prevent airborne dust.
- Remove the combustion chamber lining from the appliance and place it in a plastic bag for disposal.
- Wash potentially contaminated clothes separately from other clothing. Rinse clothes washer thoroughly.

NIOSH stated First Aid.

- Eye: Irrigate immediately.
- Breathing: Fresh air.

12 Maintenance

Cleaning the boiler heat exchanger

1. Shut down boiler:
   - Follow the "To Turn Off Gas to Appliance" instructions for the boiler in Section 10 - Startup of the Lochinvar Combi Boiler Installation and Operation Manual.
   - Do not drain the boiler unless it will be exposed to freezing temperatures. If using freeze prevention fluids in the system, do not drain.
2. Allow time for the boiler to cool to room temperature if it has been firing.
3. Remove the front access panel.
4. Disconnect the wiring and reference hose from the gas valve.
5. Disconnect the wiring from the fan assembly.
6. Disconnect the ignition cable and ground wire from the igniter.
7. Using a 3 mm Allen wrench, remove the four (4) screws securing the gas valve flange to the gas valve assembly.
8. Using a 5/16" nut driver, loosen the ratchet clamp connecting the air intake to the venturi.
9. Using a 10 mm wrench, remove the six (6) nuts securing the heat exchanger top plate to the heat exchanger.
10. Remove the heat exchanger top plate, gas valve, fan and venturi as one assembly and set aside.

⚠WARNING The boiler contains ceramic fiber materials. Use care when handling these materials per instructions on page 79. Failure to comply could result in severe personal injury.

11. Remove the condensate trap from the bottom of the heat exchanger. Place a bucket underneath the condensate fitting attached to the heat exchanger for drainage.
12. Use a vacuum cleaner to remove any accumulation on the boiler heating surfaces. Do not use any solvent.
13. Using a clean cloth dampened with warm water, wipe out the combustion chamber. Do NOT use a metal bristled brush.
14. Rinse out debris with a low pressure water supply.
15. Allow the heat exchanger to thoroughly dry.
16. Reassemble the unit in reverse order of component removal and reinstall the condensate trap.

⚠CAUTION Damaged gaskets and seals in the system can result in substantial property damage. Ensure that damaged or torn gaskets are replaced.

17. Perform start-up and check-out procedures in the *Check Flame and Combustion - Section 10 Startup* of this manual.
18. Resume operation.

Cleaning the combi boiler brazed plate heat exchanger (Combi Only)

1. Shut down boiler:
   - Follow the "To Turn Off Gas to Appliance" instructions for the boiler in Section 10 - Startup of the Lochinvar Combi Boiler Installation and Operation Manual.
   - Do not drain the boiler unless it will be exposed to freezing temperatures. If using freeze prevention fluids in the system, do not drain.
2. Shut off domestic water supply.
3. Isolate/disconnect the domestic water piping leading to the domestic water inlet and outlet.
4. Flush the brazed plate heat exchanger.
5. Follow the above steps in reverse order to place the boiler back into service.
6. Resume operation.

DHW flow switch filter cleaning (Combi Only)

1. Shut down boiler:
   - Follow the "To Turn Off Gas to Appliance" instructions for the boiler in Section 10 - Startup of the Lochinvar Combi Boiler Installation and Operation Manual.
2. Allow time for the boiler to cool to room temperature if it has been firing.
3. Remove the front access panel.
4. Locate the flow sensor on the DHW flow switch (as shown in FIG. 12-3 on page 81). Slide the flow sensor off the DHW flow switch.
5. Using an adjustable wrench, remove the DHW flow switch assembly from the unit (FIG. 12-3).
6. Remove the filter from the DHW flow switch and clean by either blowing water or air into the open end of the filter as shown in FIG. 12-4.
7. Reinstall the filter to the DHW flow switch. Reinstall the DHW flow switch back into the unit and place the flow sensor back onto the DHW flow switch.
8. If cleaning is unsuccessful, replace the DHW flow switch assembly.
9. Reinstall the front access panel removed in Step 3 and resume operation.

12 Maintenance *(continued)*

***Figure 12-3** Remove flow sensor and DHW flow switch assembly*

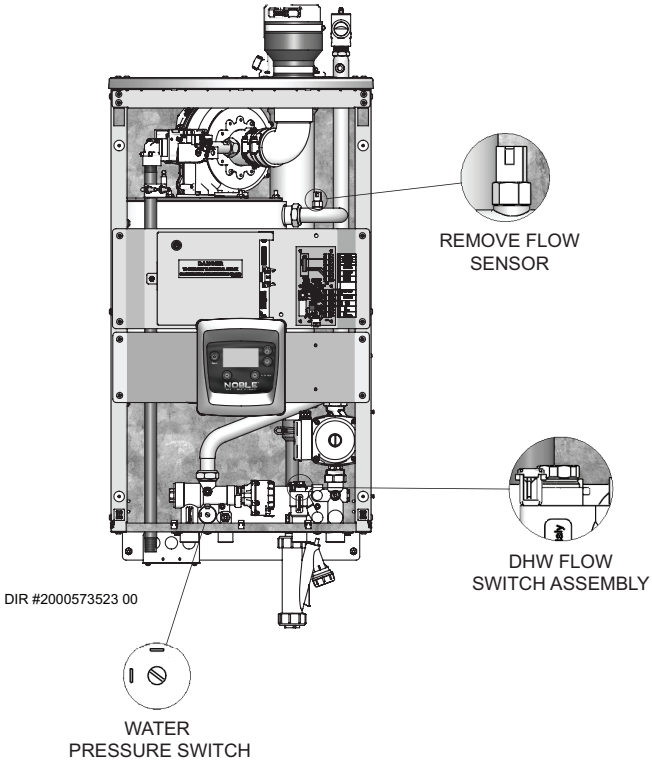

***Figure 12-4** Clean DHW flow switch filter*

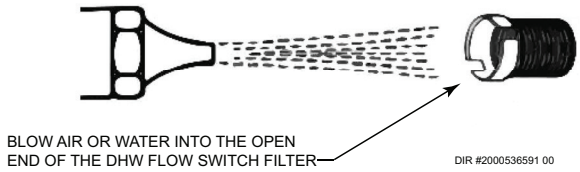

Test low water flow conditions

NOTICE This test is to be carried out once the Epic Fire Tube is completely piped in with adequate gas and water flow. Once the test is completed, ensure that the isolation valve is opened up to allow full water flow.

Test procedure

1. Place the boiler into the active position by pressing the UP button for five (5) seconds (see page 64).
2. Hold the ▶ button plus the ▼ button for five (5) seconds to enter Service Mode, allowing the unit to fire up to 100% modulation.
3. Allow the unit to progress through its normal diagnostics and pre-purge programming.
4. Allow the unit to fire and operate until the temperatures stabilize. This occurs when the inlet and outlet temperatures are rising together and the Delta T (ΔT) is maintained.
5. When the unit stabilizes, begin to slowly shut off the isolation valve on the outlet piping of the boiler (see FIG. 12-5). This will begin to restrict the flow and simulate a low flow condition.
6. While slowly shutting off the isolation valve, refer to the Status Screen to watch the behavior of the boiler. This screen allows you to monitor the inlet temperature, outlet temperature, and ΔT.
7. When the Δ T reaches 55˚F, the control will attempt to modulate the firing rate down to protect it from low flow conditions.
8. When the ΔT reaches 60°F, the control module will turn off the burner. If the control module shuts down, the test was successful.
9. Completely open the isolation valve on the outlet piping of the boiler.
10. Resume operation.

***Figure 12-5** Adjust outlet isolation valve*

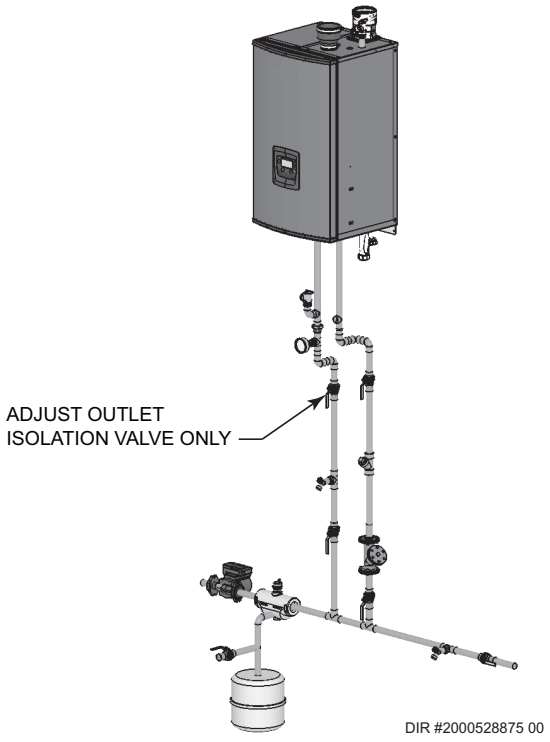

13 Troubleshooting

⚠ DANGER **If this boiler may be frozen,** immediately shut off power and gas to the appliance and contact the factory for further instructions. Operation when the heat exchanger, internal pipes, or pressure relief valves are frozen, will result in internal pressure build-up and a deadly steam explosion. Neither the Freeze Protection feature of the boiler control module nor the use of glycol eliminates the possibility of freezing.

⚠ WARNING Label all wires prior to disconnection when servicing controls. Wiring errors can cause improper and dangerous operation. Always disconnect power to the boiler before servicing. Failure to comply could result in severe personal injury, death, or substantial property damage.

⚠ WARNING Never jumper (bypass) any device except for momentary testing as outlined in the Troubleshooting chart. Severe personal injury, death, or substantial property damage can result.

Before troubleshooting:

1. Have the following items:
   a. Voltmeter that can check 120 vac, 24 vac, and 12 vdc.
   b. Continuity checker.
   c. Contact thermometer.
2. Check for 120 vac (minimum 102 vac to maximum 132 vac) to boiler.
3. Make sure thermostat is calling for heat and contacts (including appropriate zone controls) are closed. Check for 24 vac between thermostat wire nuts and ground.
4. Make sure all external limit controls are installed and operating.

Check the following:

1. Wire connectors to control module are securely plugged in at the module and originating control.
2. Gas pressures:
   - Maximum: 14 inches w.c. (natural and LP) with no flow (lockup) or with boiler on
   - Minimum: 4 inches w.c. (natural), 8 inches w.c. (LP) with gas flowing (verify during boiler startup)

Check control module fuses

NOTICE ALWAYS check control module fuses before replacing control module or any major components (blower, etc.). If one of these fuses is blown, it can prevent the control module or other components from operating.

1. Turn OFF the power to the boiler at the external line switch.
2. Remove front door/cover.
3. Remove the control module cover.
4. Inspect fuses F1, F2, and F3, see FIG 13-1 below.

Figure 13-1 *Control Module Fuses*

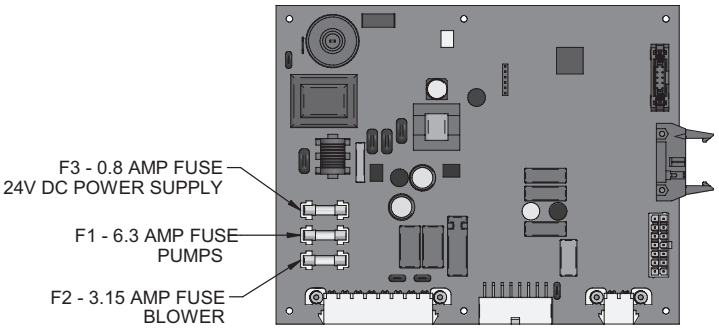

IMG00260

5. The boiler is shipped with three (3) spare fuses in a plastic bag provided with the unit.
6. If necessary, replace open fuse (F3 is .80 amps, F2 is 3.15 amps, and F1 is 6.3 amps).

Note: Fuses F1, F2 and F3 are all slow blow fuses.

⚠ WARNING Do not jumper fuse or replace with any fuse except as specified. Failure to comply could result in severe personal injury, death, or substantial property damage.

7. Install control module cover and front door/cover after fuse inspection.
8. Restore power to the boiler at the external line switch and verify boiler operation (Section 10 - Start-up) after completing boiler service.

13 Troubleshooting *(continued)*

Checking temperature sensors

The boiler temperature sensors (inlet water, outlet water, system water, flue, and outdoor air) are all resistance type devices. The following tables show the correct values for the sensors at various temperatures. Use an ohmmeter to read the resistance of the sensor at a known temperature. If the resistance of the sensor does not closely match its corresponding table, replace the sensor

It is important to note that the flue and outlet water sensors have two temperature sensing devices in one housing. These devices are designated as S1a/S1b, outlet sensor and S3a/S3b, flue sensor. Please reference the wiring diagram in Section 14 of this manual for correct terminal location.

Table 13-1A - *Inlet Water/System / DHW Sensor (Combi Only) Resistance vs. Temperature*

Temperature	Resistance	Temperature	Resistance
50	18,780	158	1,990
68	12,263	176	1,458
86	8,194	194	1,084
104	5,592	212	817
122	3,893		
140	2,760		

Table 13-1B - *Outdoor Air Sensor Resistance vs. Temperature*

Temperature	Resistance	Temperature	Resistance
-50	490,813	20	46,218
-40	336,606	30	34,558
-30	234,196	40	26,099
-20	165,180	50	19,900
-10	118,018	60	15,311
0	85,362	70	11,883
10	62,465	80	9,299

Table 13-1C - *Outlet Water Sensor Resistance vs. Temperature*

S1a (Wire Color - R/BK and Y)				S1b (Wire Color - G and Y)			
Temperature	Resistance	Temperature	Resistance	Temperature	Resistance	Temperature	Resistance
50	19,553	158	2,004	50	40,030	158	3,478
68	12,690	176	1,464	68	25,030	176	2,492
86	8,406	194	1,084	86	16,090	194	1,816
104	5,715	212	816	104	10,610	212	1,344
122	3,958			122	7,166		
140	2,786			140	4,943		

Table 13-1D - *Flue Sensor Resistance vs. Temperature*

S3a (Wire Color - W/B and Y)				S3b (Wire Color - PR and Y)			
Temperature	Resistance	Temperature	Resistance	Temperature	Resistance	Temperature	Resistance
50	40,030	158	3,478	50	258,500	158	16,870
68	25,030	176	2,492	68	125,500	176	12,000
86	16,090	194	1,816	86	80,220	194	8,674
104	10,610	212	1,344	104	52,590	212	6,369
122	7,166			122	35,270		
140	4,943			140	24,160		

13 Troubleshooting

Table 13-2 *Troubleshooting Chart - Noisy System*

FAULT	CAUSE	CORRECTIVE ACTION
Noisy Operation	Supply gas problem. Natural gas pressures should be between 4 inches w.c. and 14 inches w.c. LP gas pressures should be between 8 inches w.c. and 14 inches w.c.	• Refer to Section 7 - Gas Connections for detailed information concerning the gas supply.
	Gas/air mixture problem.	• Refer to the Gas Valve Adjustment Procedure on page 93 of this manual for the proper gas valve setting. Verify that the vent/air intake lengths do not exceed the maximum listed in Section 3 - General Venting.
	Dirty/damaged burner.	• Refer to page 79 in this manual for the burner removal and inspection procedure. Clean or replace the burner door assembly as necessary.
	Low water flow through the heat exchanger.	• Refer to Section 6A - Hydronic Piping for minimum flow rates. Verify that the boiler and system pump are running on a call for heat.
	Air in the piping system.	• Properly purge all air from the piping system.
	Low system water pressure.	• Verify system pressure is a minimum of 12 psi.
No Pump Operation - Boiler / DHW Pump	Blown fuse.	• Replace fuse F1 on the control board, see page 82 of this manual. **Note:** Make sure pump amperage does not exceed 1.8 amps.
	Faulty pump.	• Replace pump.
	Internal fault on control board.	• Replace main control board.
Relief Valve Opening	System pressure exceeds relief valve setting.	• Lower the system pressure below the 30 psi rating of the supplied relief valve or replace the standard relief valve with a higher rated valve up to the maximum pressure of the heat exchanger. • Improperly sized expansion tank.

13 Troubleshooting *(continued)*

Table 13-3 *Troubleshooting Chart - Fault Messages Displayed on Boiler Interface*

FAULT	DESCRIPTION	CORRECTIVE ACTION
Memory Error	The control module has detected parameter settings that are corrupted.	• Replace control module.
Fan Speed (will require a manual reset once the condition has been corrected. Press the RESET button on the display to reset.)	The actual fan RPM is outside of the tolerance of the fan speed RPM target.	• Vent/air intake lengths exceed the maximum allowed lengths. Refer to Section 3 - General Venting for proper lengths. • Check for obstruction or blockage in the vent/air intake pipes or at terminations. • Check the wiring connections at the fan and at the main control board. • Replace the fan. • Replace the main control board.
	Blown fuse.	• Replace fuse F2 on the control board, see page 82 of this manual.
LWCO (will require a manual reset once condition has been corrected. Press the RESET button on the SMART SYSTEM display to reset.)	The low water cutoff (LWCO) is not making.	• Check boiler pump operation on a call for heat. • Check for closed valves or obstructions in the boiler piping. • Verify system is full of water and all air has been purged from the system. • Check for a loose or misplaced jumper across terminals 11 and 12. • Replace LWCO.
	Blown fuse.	• Replace fuse F3 on the control board, see page 82 of this manual.
Flame Sequence (will require a manual reset once the condition has been corrected. Press the RESET button on the display to reset.)	The flame detector circuit is seeing a flame signal when the gas valve is OFF.	• Verify flame is not present. If present, turn off gas supply and replace gas valve. • Check supply voltage for proper polarity. • Check external wiring for voltage feedback. • Check the flame rod and make sure it is clean. • Check the internal wiring for bad connections. • Replace main control board.

13 Troubleshooting

Table 13-3 *(continued from previous page) Troubleshooting Chart - Fault Messages Displayed on Boiler Interface*

FAULT	DESCRIPTION	CORRECTIVE ACTION
Outlet ARHL	The outlet water temperature has exceeded the setting of the automatic reset high limit.	• Adjust the set point of the auto reset limit to a higher setting up to a maximum of 200°F. Reference Section 11 - Operating Information for adjusting procedures. • Verify that the system is full of water and that all air has been properly purged from the system. • Verify that the boiler is piped properly into the heating system. Refer to Section 6 - Hydronic Piping for the proper piping methods for the Lochinvar Combi Boiler. • Check 120 vac to boiler pump motor on a call for heat. If voltage is not present, check wiring back to the main control board. • Replace the main control board if necessary. • If 120 vac is present on a call for heat and the boiler pump is not operating, replace the pump. • If operating on something other than an outlet sensor, check temperature setting of the main control board. • If the optional manual reset high limit has tripped, check setting of the device. • Check resistance of water sensors and compare to Table 13-1A on page 83 of this manual. Replace sensor if necessary. • Check operation of diverter valve motor. Replace if necessary.
Air Pressure Switch (will require a manual reset once the condition has been corrected. Press the RESET button on the display to reset.)	Air pressure switch contacts are open.	• Check the wiring connections to switch. Wires should be connected to the common and normally closed terminals. • Air intake lengths exceed the maximum allowed lengths. Refer to Section 3 - General Venting for proper lengths. • Check for obstruction or blockage in the air intake pipes or at terminations. • Check reference hoses connected to the air pressure switch for blockage or obstruction. • Inspect the burner. Reference page 79 of this manual for removal and cleaning procedures. Replace if necessary. • Inspect the heat exchanger. Reference page 80 of this manual for removal and cleaning procedures. • Faulty air pressure switch. Replace switch.
AUX Limit Fault	Aux limit device open.	• Check wiring to aux limit device. • Check aux limit device.

13 Troubleshooting *(continued)*

***Table 13-3** (continued from previous page) Troubleshooting Chart - Fault Messages Displayed on Boiler Interface*

FAULT	DESCRIPTION	CORRECTIVE ACTION
Flame Fail: Running (will require a manual reset once the condition has been corrected. Press the RESET button on the display to reset.)	The unit has lost flame signal four (4) times during a call for heat.	• Inspect spark electrode and associated wiring for damage and connection. Reference page 78 of this manual for removal and cleaning procedures. Replace if necessary. • Check for proper electrical grounding of the unit. • Check incoming supply gas pressure. Natural gas pressures should be between 4 - 14 inches w.c. and LP gas pressures should be between 8 - 14 inches w.c. Refer to Section 7 - Gas Connections for detailed information concerning the gas supply. • Verify that the plastic hose from the gas valve to the air inlet is connected and is not damaged. • Verify that the vent/air intake pipes are correctly installed and that there are no obstructions. • Check for 24 vac to the gas valve at the 2-pin connection on the side of the main control board during the ignition attempt. If no voltage is present, replace the main control board. • If 24 vac is present at the main control board, check the wiring between the main control board and the gas valve. Replace the wiring if necessary. Do not disconnect the wiring from the gas valve and attempt to measure voltage at that point. The main control board can detect if the gas valve is not connected and will display the Gas Valve or Gas Valve Fail fault. • If 24 vac is present, check the outlet of the valve to ensure the valve is flowing gas. With a manometer connected to the outlet tap of the gas valve, when the unit is in the prepurge period, there should be a negative pressure present. When the valve is energized a change in pressure should occur. If the pressure change does not occur, the gas valve is not opening. Replace the gas valve. • Inspect flame sensor and associated wiring. Reference page 78 of this manual for removal and cleaning procedures. Replace if necessary. • Inspect and clean the heat exchanger as necessary. Reference page 80 of this manual for cleaning procedures. • Inspect the burner. Reference page 79 of this manual for removal and cleaning procedures. Replace if necessary. • Replace the main control board. • Verify the venturi is moving freely and does not have any sticky residue on the flapper. Reference page 77 of this manual for the proper cleaning procedure.
Flame Fail: Ignition (will require a manual reset once the condition has been corrected. Press the RESET button on the display to reset.)	The unit has failed to prove main burner ignition after several attempts.	

13 Troubleshooting

***Table 13-3** (continued from previous page) Troubleshooting Chart - Fault Messages Displayed on Boiler Interface*

FAULT	DESCRIPTION	CORRECTIVE ACTION
Flue Temp Limit	The stack temperature has exceeded the Flue Temp Limit set parameters.	• Inspect the heat exchanger. Reference page 80 of this manual for the procedure on how to clean the flue side of the heat exchanger. • Inspect the flue sensor and associated wiring. Measure the resistance of the flue sensor and compare to Table 13-1D on page 83 of this manual. Replace the sensor if necessary. • Verify that the vent/air intake pipes are properly installed and that there are no obstructions. • Replace the main control board.
Flue Temp High	The stack temperature has exceeded the set parameters for the boiler.	
Outlet MRHL (will require a manual reset once the condition has been corrected. Press the RESET button on the display to reset.)	The outlet water temperature has exceeded the setting of the manual reset high limit.	• Verify that the system is full of water and that all air has been properly purged from the system. • Verify that the boiler is piped properly into the heating system. Refer to Section 6A - Hydronic Piping for the proper piping methods for the Lochinvar Combi Boiler. • Check 120 vac to boiler pump motor on a call for heat. If voltage is not present, check wiring back to the main control board. • Replace the main control board if necessary. • If 120 vac is present on a call for heat and the boiler pump is not operating, replace the pump. • If operating on something other than an outlet sensor, check temperature setting of the main control board. • Check resistance of water sensors and compare to Table 13-1A on page 83 of this manual. Replace sensor if necessary. • Check operation of diverter valve motor. Replace if necessary.
Outlet Temp High	Outlet water temperature has exceeded the maximum outlet water temperature.	
Outlet Temp DIFF (will require a manual reset once the condition has been corrected. Press the RESET button on the display to reset.)	The temperature difference between the two (2) outlet sensors is too high.	• Check wiring to sensor. Make sure wiring is connected and not damaged. Reconnect / repair wiring if necessary. • Measure the resistance of the sensor and compare to the resistance in Table 13-1C on page 83 of this manual. Replace sensor if necessary. • Replace control module.
Flue Sensor Fault (will require a manual reset once the condition has been corrected. Press the RESET button on the display to reset.)	One or both of the flue sensors is open or shorted.	• Inspect the flue sensor and associated wiring. Measure the resistance of the flue sensor and compare to Table 13-1D on page 83 of this manual. Replace the sensor if necessary. • Replace the main control board.

13 Troubleshooting *(continued)*

***Table 13-3** (continued from previous page) Troubleshooting Chart - Fault Messages Displayed on Boiler Interface*

FAULT	DESCRIPTION	CORRECTIVE ACTION
Outlet Sensor Fault (will require a manual reset once the condition has been corrected. Press the RESET button on the display to reset.)	One or both of the outlet sensors has opened or shorted.	• Check the sensor and its associated wiring. Repair or replace the sensor or wiring if damaged. • Measure the resistances of the sensors and compare the resistances to the tables on page 83. Replace if necessary.
Inlet Sensor Fault (will require a manual reset once the condition has been corrected. Press the RESET button on the display to reset.)	The inlet sensor is open.	• Check the sensor and its associated wiring. Repair or replace the sensor or wiring if damaged.
Set Point Met	The temperature has reached the set point + 10°F.	• None
Anti-Cycling	The main control board has received a call for heat too quickly after the previous call for heat has ended.	• The control board will release the call for heat after 60 seconds. • The control board will release the call for heat if the outlet temperature drops 10°F.
Delta T High	The temperature rise across the heat exchanger has exceeded the set parameters for the boiler.	• Verify that the system is full of water and that all air has been properly purged from the system. • Verify that the boiler is piped properly into the heating system. Refer to Section 6 - Hydronic Piping for the proper piping methods for the Lochinvar Combi Boiler. • Check for 120 vac to the boiler pump motor on a call for heat. If voltage is not present, check the wiring back to the main control board. Replace the main control board if necessary. • If 120 vac is present on a call for heat and the boiler pump is not operating, replace the pump. • Verify that the boiler pump is set to the proper speed or that the pump is the proper size. Reference Section 6 - Hydronic Piping for boiler pump specifications.
	The fan speed is being limited due to the temperature rise across the heat exchanger exceeding 55°F.	

13 Troubleshooting

Table 13-3 *(continued from previous page) Troubleshooting Chart - Fault Messages Displayed on Boiler Interface*

ERROR CODE	DESCRIPTION	CORRECTIVE ACTION
Low Voltage	120 vac input to the main control board has dropped below 80 vac.	• Check 120 vac supply to the transformer. • Check wiring connections at the low voltage terminal strip. • Check the wire size/length to remote devices. • Replace the transformer. • Check 24V.
No Flue Temp Change	The flue temperature did not change after the burner started firing.	• Verify that the flue sensor is installed. • Check the sensor and its associated wiring. Repair or replace the sensor or wiring if damaged.
CombiSensorFault (Combi Only)	DHW sensor is not connected (combi only).	• Check the DHW sensor and its associated wiring. Repair or replace as needed.
Lockout Inlet Sensor Fault	The inlet sensor has been disconnected.	• Check the sensors and their associated wiring. Repair or replace the sensor or wiring if damaged. • Measure the resistance of the sensors and compare the resistance to the tables on page 83 of this manual. • Replace the sensor if necessary.
	The inlet sensor has been shorted.	• Check the sensors and their associated wiring. Repair or replace the sensor or wiring if damaged. • Measure the resistance of the sensors and compare the resistance to the tables on page 83 of this manual. • Replace the sensor if necessary.
Outdoor Sensor Missing	The outdoor sensor has opened or shorted.	• Check the sensors and their associated wiring. Repair or replace the sensor or wiring if damaged. • Measure the resistance of the sensors and compare the resistance to the tables on page 83 of this manual. • Replace the sensor if necessary.

13 Troubleshooting *(continued)*

***Table 13-3** (continued from previous page) Troubleshooting Chart - Fault Messages Displayed on Boiler Interface*

FAULT	CAUSE	CORRECTIVE ACTION
No Hot Water at Faucets (Combi Only)	DHW flow switch is not triggering a DHW demand (red light on flow switch sensor does not turn on during a DHW draw).	• Verify DHW flow is at least 0.4 gpm.
		• Check wiring harness connections between the low voltage connection board connector CN4 and the flow switch sensor.
		• Verify that voltage between wires CN4-8 and CN4-3 is 9 - 10 Vdc. If no voltage, replace Low Voltage Connection Board.
		• Replace flow switch sensor.
	DHW flow switch input not received by main control board (red light on flow switch sensor turns on during a DHW draw, but combi boiler does not start a DHW Call for Heat).	• Check wiring harness connections between the Low Voltage Connection Board and the main control board.
		• Replace Low Voltage Connection Board.
		• Replace Main Control Board.
	Diverter valve is not in DHW position (heated boiler water is being provided to the space heating system rather than to the combi plate heat exchanger.	• Check wiring harness connections between the Low Voltage Connection Board (CN4) and the combi diverter valve motor.
		• Check that diverter valve motor is operating.
		• Verify that the voltage between wire CN4-2 and ground is 24 Vac during a DHW demand.
		• Replace combi diverter valve motor, Low Voltage Connection Board, or wire harness.
DHW Water is not Hot Enough (Combi Only)	DHW set point is too low.	• Set DHW Setpt to the appropriate temperature based on the anti-scald mixing valve set point.
	Anti-scald mixing valve set point is too low.	• Verify the anti-scald mixing valve is set to the desired temperature.
	DHW flow rate is too high (combi boiler is firing at 100% in DHW Mode, but DHW temperature on screen is lower than the DHW Setpt on the screen).	• During maximum flow conditions at all fixtures, adjust the field supplied flow control valve at the outlet of the mixing valve (or combi DHW outlet) to reduce the hot water flow until the DHW temperature reaches the DHW set point.
	Combi DHW sensor fault (display unit will show "Combi Sensor Fault").	• See Combi Sensor Fault.

13 Troubleshooting

Table 13-3 *(continued from previous page) Troubleshooting Chart - Fault Messages Displayed on Boiler Interface*

FAULT	CAUSE	CORRECTIVE ACTION
Combi Boiler is Running but Does Not Supply Heated Water to Space Heating System (Combi Only)	A DHW demand is present.	• Wait until DHW demand has ended, then combi unit should provide heated water to the space heating system. The Epic Fire Tube does not provide heated water during a DHW demand.
	Diverter valve is not in DHW position (heated boiler water is being provided to the combi plate heat exchanger rather than to the space heating system).	• Check wiring harness connections between the Low Voltage Connection Board (CN4) and the combi diverter valve motor.
		• Check that diverter valve motor is operating.
		• Verify that the voltage between wire CN4-1 and ground is 24 Vac during a space heating demand.
		• Replace combi diverter valve motor, Low Voltage Connection Board, or wire harness.
Space Heating System Heat Emitters Get Hot During a DHW Draw and the Combi Boiler does not Provide Hot Enough Domestic Hot Water (Combi Only)	Diverter valve not operating correctly.	• Verify diverter valve motor operation. If combi diverter valve motor is operating correctly, replace the flow group on the combi water set.
		• Verify wiring harness connections between the Low Voltage Connection Board, and the diverter valve motor, and between the main control board and the Low Voltage Connection Board.
		• Verify that voltage between CN4-2 and ground is 24 Vac and that voltage between CN4-1 and ground is 0 Vac. If voltages are incorrect, replace the Low Voltage Connection Board, wire harness, or main control board.
		• If voltages are correct and diverter valve motor is not operating correctly, replace the combi diverter valve motor.
Lockout! Water Press Switch	Water pressure switch open.	• Verify water pressure at boiler. • Verify harness connection. • Verify voltage at pressure switch. • Replace pressure switch.

13 Troubleshooting *(continued)*

Combustion Analysis Procedure

1. Turn the main power off to the boiler.
2. Hold the ▶ plus the ▼ button for five (5) seconds to enter Service Mode.
3. Once the boiler has modulated up to full fire, measure the combustion. Place the analyzer probe in the fitting on the flue adapter. The values should be in the range listed in Table 13-4. The CO levels shall be less than 200 ppm for a properly installed unit.

   If the combustion is not within the specified range, reference Table 13-5 for possible causes and corrective actions.

Table 13-4 *Flue Products*

Natural Gas				
Input Rate	Target		Range	
	CO_2	O_2	CO_2	O_2
High Fire	9.0%	4.9%	8.5% - 10.5%	2.3% - 5.7%
Low Fire	8.9%	5.4%	8.7% - 9.1%	5.1% - 5.7%
CO levels shall be less than 200 ppm.				

Propane				
Input Rate	Target		Range	
	CO_2	O_2	CO_2	O_2
High Fire	10.5%	4.9%	10.0% - 11.0%	4.1% - 5.6%
Low Fire	10.4%	5.4%	10.2% - 10.6%	5.1% - 5.7%
CO levels shall be less than 200 ppm.				

4. Once the combustion analysis is complete, test the safety shutoff device by turning the manual shutoff switch to the OFF position and ensuring that the boiler shuts down and registers an alarm. Turn the manual gas valve to the ON position and reset the control.
5. Turn the main power off to the boiler and replace the cap on the sample port.
6. Place the boiler back into normal operation.

⚠WARNING You must replace the cap on the vent adapter to prevent flue gas spillage into the room. Failure to comply could result in severe personal injury, death, or substantial property damage.

Gas valve adjustment procedure

CAUTION This gas valve is factory set. Under normal operating conditions this valve should not need adjusting.

If adjustment of the gas valve is deemed necessary, use the following procedure:

High Fire

Locate the throttle adjustment screw on the gas valve (FIG. 13-2). Using a 2.5 mm hex-key wrench, turn the screw 1/10 to 1/8 turn **counterclockwise** to increase CO_2 levels or 1/10 to 1/8 turn **clockwise** to decrease CO_2 levels. After one adjustment on the valve, follow the Combustion Analysis Procedure of this manual to measure the combustion.

Low Fire

Locate the bias/offset adjustment screw on the gas valve (FIG. 13-2). Using a 4 mm hex-key wrench, turn the screw 1/10 to 1/8 turn **clockwise** to increase CO_2 levels or 1/10 to 1/8 turn **counterclockwise** to decrease CO_2 levels. After one adjustment on the valve, follow the Combustion Analysis Procedure of this manual to measure the combustion.

NOTE: The low fire adjustment responds very slowly. Make extremely small adjustments and allow the boiler to run for a couple of minutes between adjustments. Use a combustion analyzer to check the adjustment effects.

If combustion is still not within the specified range, repeat the procedure. This procedure SHOULD NOT be performed more than four (4) times. If after four (4) adjustments and the combustion is still not within the specified range, revisit the possible causes in Table 13-5 and call Technical Support before replacing the gas valve.

Table 13-5 *Troubleshooting Chart - Combustion Levels*

POSSIBLE CAUSE	CORRECTIVE ACTION
Vent/Air Intake Length or Obstruction	• Refer to Section 3 - General Venting for the proper venting and air intake methods for the Epic Fire Tube. • Check for obstructions at the vent/air intake terminals.
Gas Supply Pressure	• Refer to Section 7 - Gas Connections for the proper gas supply for the Lochinvar Fire Tube.
Dirty/Damaged Burner	• Refer to page 79 of this manual for burner removal. • Replace burner if necessary.
Gas Valve Adjustment	• Refer to this page of the manual for the gas valve adjustment procedure.

13 Troubleshooting

Figure 13-2 *Gas Valve Adjustment_Layout 1*

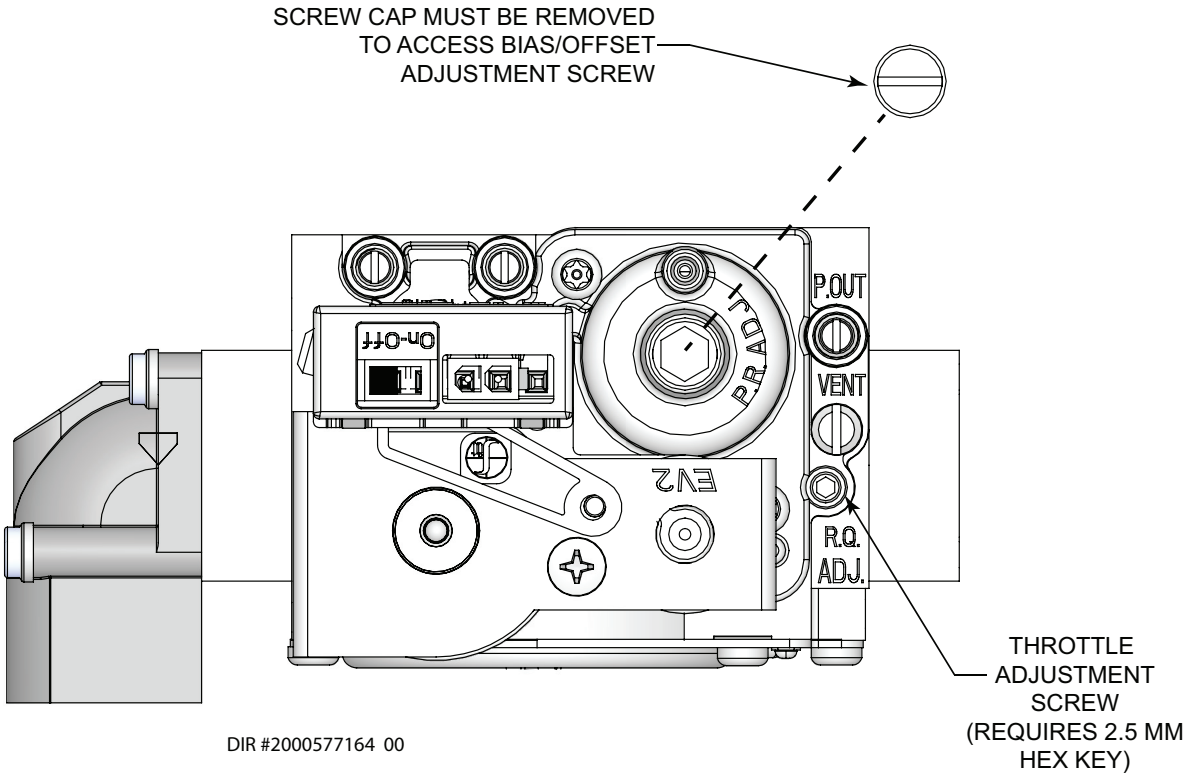

Figure 13-3 *Gas Valve Adjustment_Layout 2*

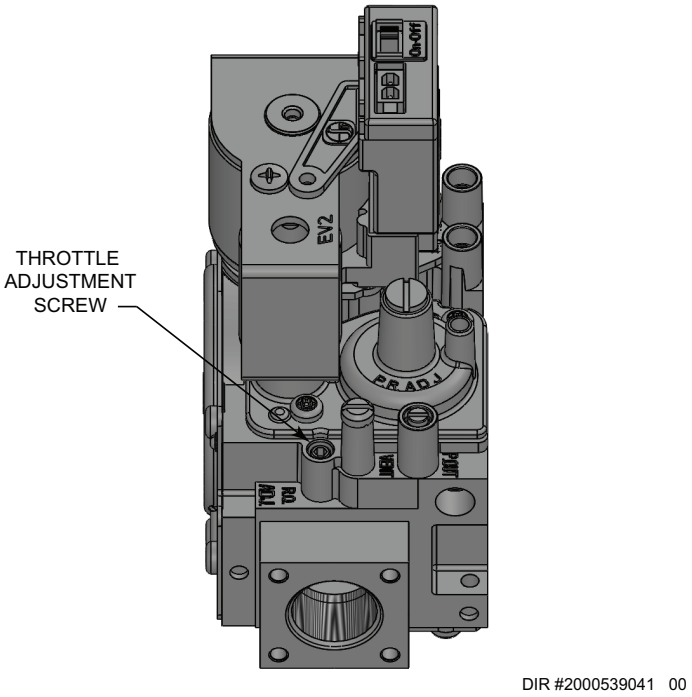

14 Diagrams

Figure 14-1 Combi Models Only: *Ladder Diagram (Standard)*

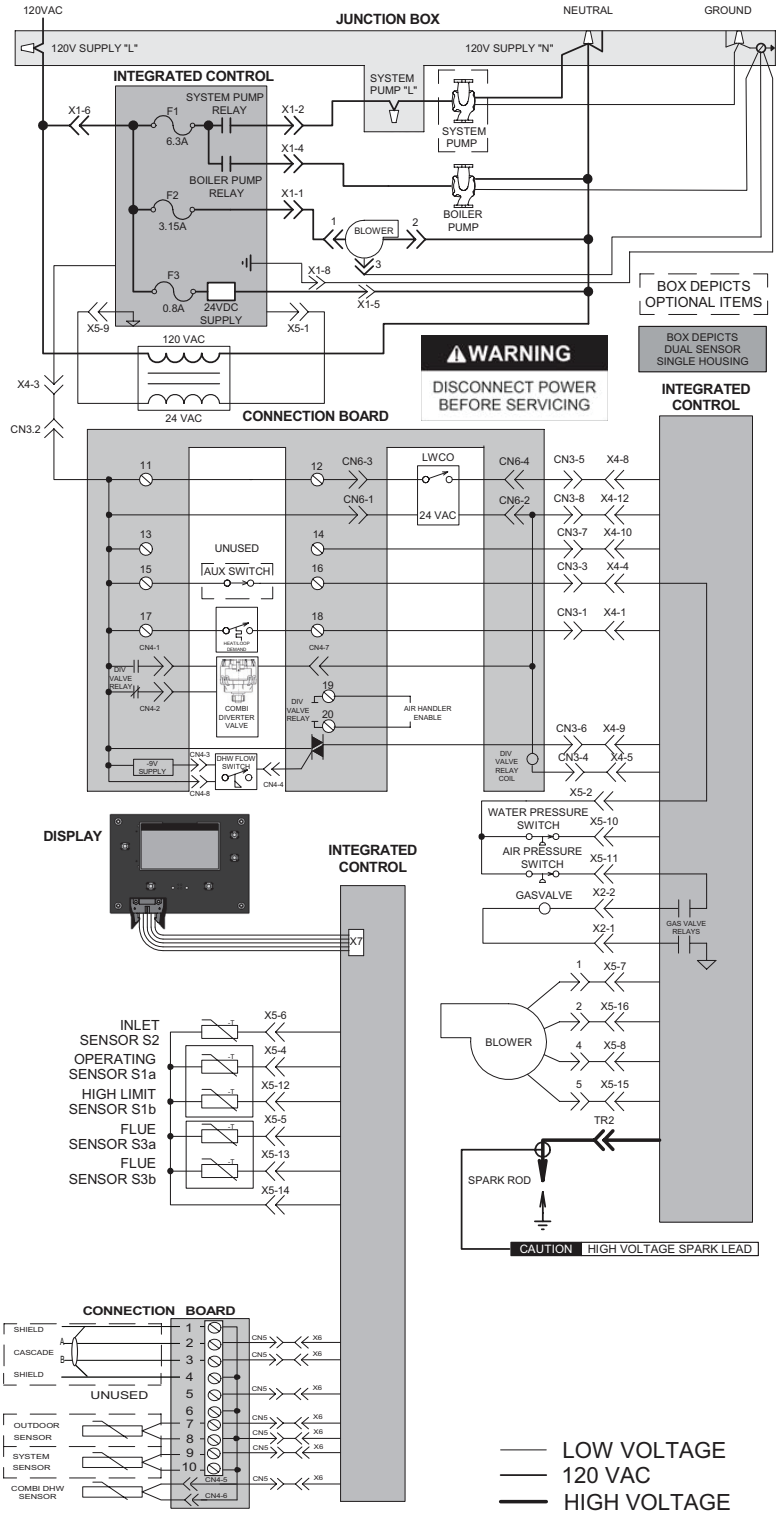

Notes:

1. All wiring must be installed in accordance with: local, state, provincial and national code requirements per either N.E.C. in USA or C.S.A. in Canada.
2. If any original equipment wire as supplied with the appliance must be replaced, it must be replaced with wire having same wire gauge (AWG) and rated for a minimum of 105℃. Exceptions: Replacement high voltage spark lead and ribbon cables must be purchased from the factory. Use of a non-approved spark lead or ribbon cables can lead to operational problems which could result in non-repairable damage to the integrated controller or other components.
3. Actual connector block locations may vary from those shown on diagrams. Refer to actual components for proper connector block locations when using diagrams to troubleshoot unit.

LABEL,LADDER,COMBI
100274889 REV E

14 Diagrams

Figure 14-2 Combi Models Only: *Wiring Diagram (Standard)*

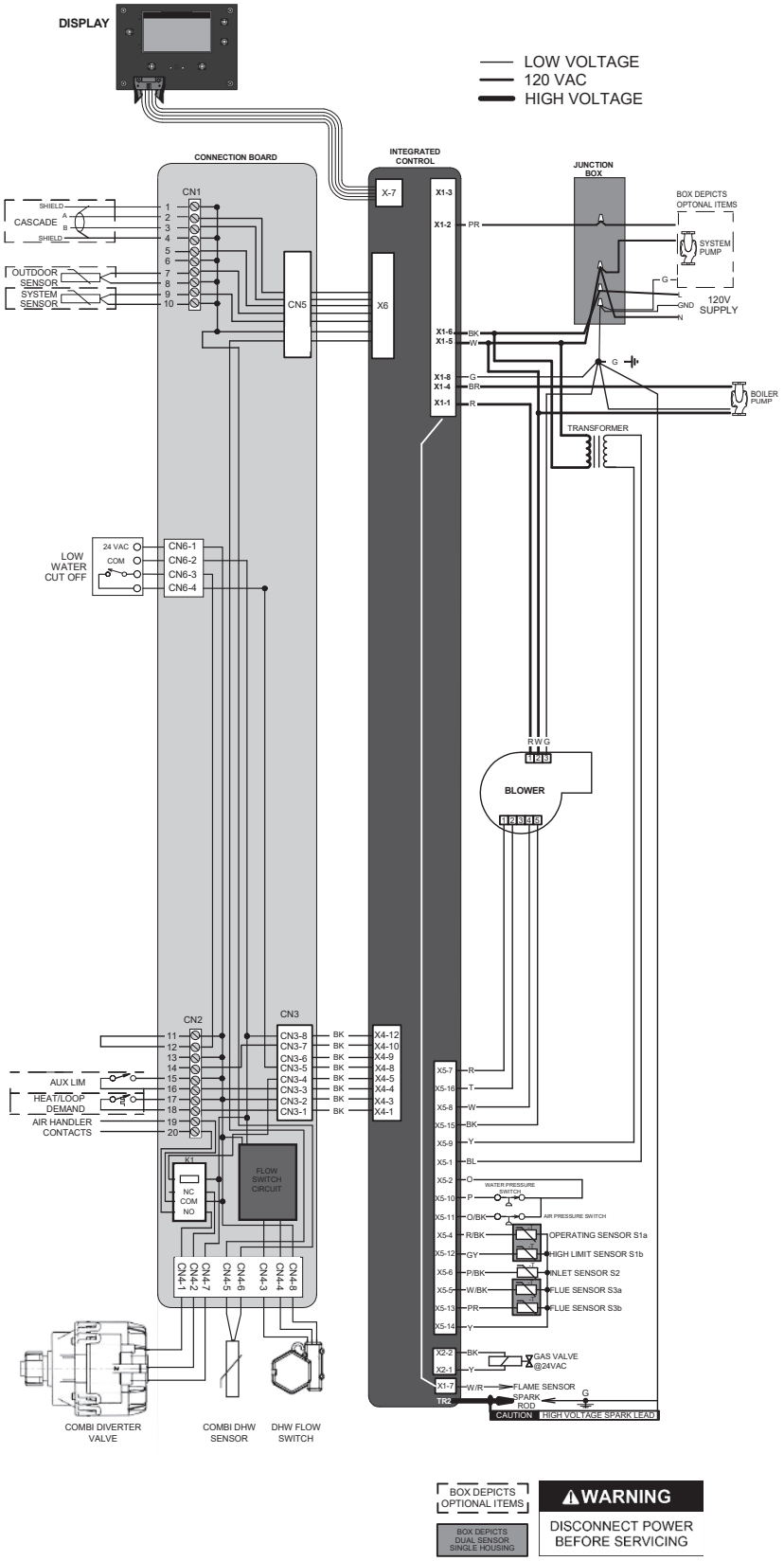

Notes:
1. All wiring must be installed in accordance with: local, state, provincial and national code requirements per either N.E.C. in USA or C.S.A. in Canada.
2. If any original equipment wire as supplied with the appliance must be replaced, it must be replaced with wire having same wire gauge (AWG) and rated for a minimum of 105°C. Exceptions: Replacement high voltage spark lead and ribbon cables must be purchased from the factory. Use of a non-approved spark lead or ribbon cables can lead to operational problems which could result in non-repairable damage to the integrated controller or other components.
3. Actual connector block locations may vary from those shown on diagrams. Refer to actual components for proper connector block locations when using diagrams to troubleshoot unit.

LABEL,WIRING,COMBI
100273313 REV E

14 Diagrams *(continued)*

Figure 14-3 Boiler Models Only: Ladder Diagram (Standard)

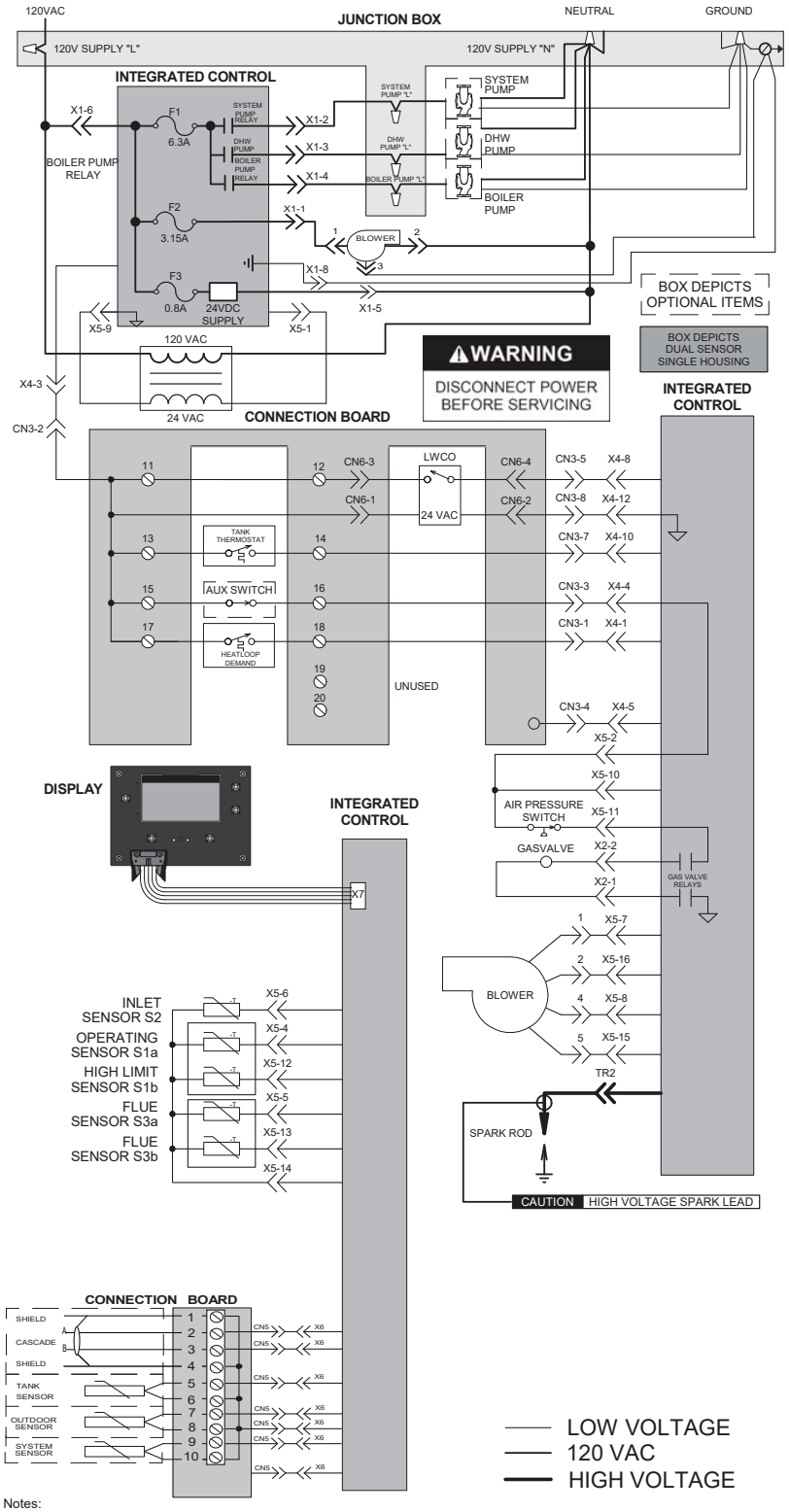

Notes:

1. All wiring must be installed in accordance with: local, state, provincial and national code requirements per either N.E.C. in USA or C.S.A. in Canada.
2. If any original equipment wire as supplied with the appliance must be replaced, it must be replaced with wire having same wire gauge (AWG) and rated for a minimum of 105℃. Exceptions: Replacement high voltage spark lead and ribbon cables must be purchased from the factory. Use of a non-approved spark lead or ribbon cables can lead to operational problems which could result in non-repairable damage to the integrated controller or other components.
3. Actual connector block locations may vary from those shown on diagrams. Refer to actual components for proper connector block locations when using diagrams to troubleshoot unit.

LABEL, LADDER,NKB
100273312 REV D

14 Diagrams

Figure 14-4 Boiler Models Only: *Wiring Diagram (Standard)*

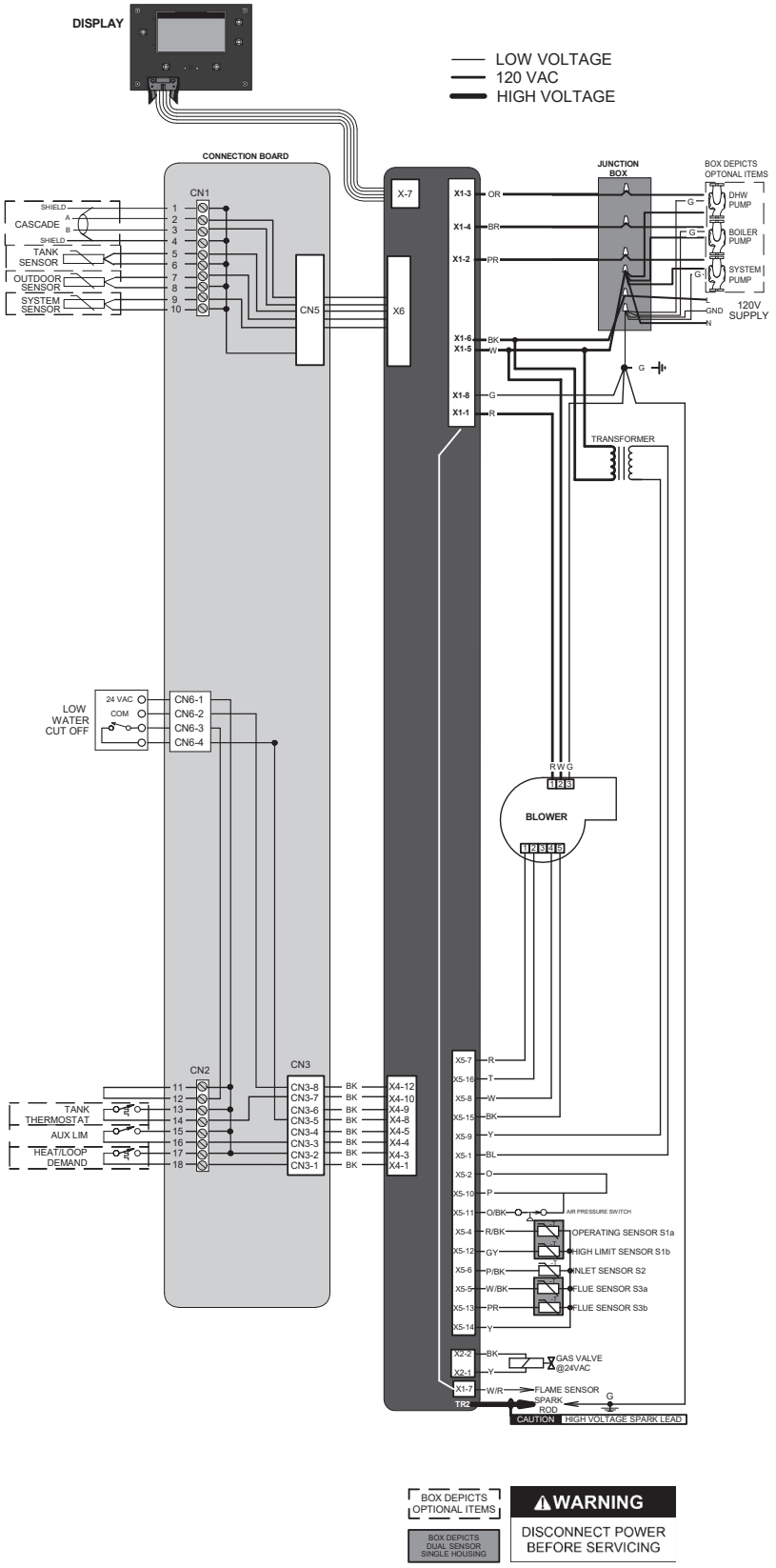

Notes:
1. All wiring must be installed in accordance with: local, state, provincial and national code requirements per either N.E.C. in USA or C.S.A. in Canada.
2. If any original equipment wire as supplied with the appliance must be replaced, it must be replaced with wire having same wire gauge (AWG) and rated for a minimum of 105°C. Exceptions: Replacement high voltage spark lead and ribbon cables must be purchased from the factory. Use of a non-approved spark lead or ribbon cables can lead to operational problems which could result in non-repairable damage to the integrated controller or other components.
3. Actual connector block locations may vary from those shown on diagrams. Refer to actual components for proper connector block locations when using diagrams to troubleshoot unit.

LABEL WIRING.NKB
100274861 REV C

Revision A (PCP #3000024821 / CN #500014945) initial release.

Revision B (PCP #3000026706 / CN #500016345) reflects an update to the low voltage field wiring connections images on pages 56 and 57.

Revision C (PCP #3000027055 / CN #500016866) reflects the removal of references to an external flow switch.

Revision D (PCP #3000027325 / CN #500017083) reflects the removal of Table 2A on page 12.

Revision E (PCP #3000028215 / CN #500017754) reflects the removal of references to wire colors.

Revision F (PCP #3000029099 / CN #500018651) reflects an update to the ladder diagrams.

Revision G (PCP #3000031515 / CN #500021060) reflects the addition of series numbers along with the water pressure switch.

Revision H (PCP #3000034309 / CN #500022970) reflects an update to the gas valve adjustment procedure.

Revision J (PCP #3000036920 / CN #500025230) reflects an update to the system supply sensor text on page 55.

Revision K (PCP #3000041012 / CN #500028988) reflects flue grommet updates on pages 67, 76, and 93 along with the Centrotherm updates on pages 19 and 24.

Revision L (PCP #3000042716 / CN #500030589) reflects freeze protection updates along with PVC purge as well as venturi cleaning and troubleshooting additions.

Revision M (PCP #3000053701 / CN #500040266) reflects the addition of EFC110-199.

Revision N (PCP #3000054662 / CN #500041224) reflects the removal of the high altitude note on page 6 and an update to the description of a closet on page 7.

Revision P (PCP #3000055079 / CN #500041625) reflects the addition of figures 6-3B and 6-10B.

Revision R (PCP #3000057618 / CN #500043786) reflects a carbon monoxide warning added to page 3.

Revision T (PCP #3000060820 / CN #500046810) reflects the addition of a dielectric notice to page 45.

Revision U (PCP #3000063149 / CN #500048969) reflects updates to wiring and ladder diagrams.

Revision V (PCP #3000065364 / CN #500051012) reflects updates to models max vent/air piping sizes and flue product range.

Revision W (PCP #3000066770 / CN #500052314) reflects updates to water maintenance and water softener recommendations.

Lochinvar®
HIGH EFFICIENCY BOILERS & WATER HEATERS
300 Maddox Simpson Parkway
Lebanon, TN 37090
615-889-8900 / Fax: 615-547-1000
www.Lochinvar.com

100283650_2000541395_Rev W
07/25