Form No. 3478-569 Rev A

TORO

Count on it.

Operator's Manual

# Flex-Force Power System® 60V Pole Saw

**Model No. 51870—Serial No. 325000000 and Up**

**Model No. 51870T—Serial No. 325000000 and Up**

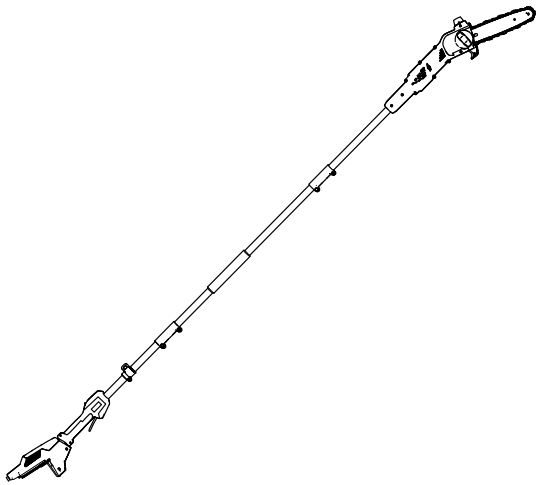

Register at www.Toro.com.

Original Instructions (EN)

*3478-569*




**For assistance, please see www.Toro.com/support for instructional resources or contact your Authorized Service Dealer before returning this product.**

**⚠ WARNING**

**CALIFORNIA**
**Proposition 65 Warning**

**The power cord on this product contains lead, a chemical known to the State of California to cause birth defects or other reproductive harm. Wash hands after handling.**

**Use of this product may cause exposure to chemicals known to the State of California to cause cancer, birth defects, or other reproductive harm.**

# Introduction

This pole saw is designed for trimming small branches and limbs up to 6 inches (15.2 cm) in diameter. It is to be used only by adults. It is designed to use Flex-Force™ 60V lithium-ion battery packs. These battery packs are designed to be charged only by Flex-Force 60V lithium-ion battery chargers. Using these products for purposes other than their intended use could prove dangerous to you and bystanders.

***Important:*** **If you are using this machine with a battery pack that is 4.0 Ah or greater you must install the included quick-release harness for proper support and balance.**

**Do not use other harnesses or multiple harnesses when operating the machine.**

**Model 51870T does not include a battery or a charger.**

**© 2025—The Toro® Company**
**8111 Lyndale Avenue South**
**Bloomington, MN 55420**

Register at www.Toro.com.

Original Instructions (EN)
**Printed in China**
**All Rights Reserved**




M

Read this information carefully to learn how to operate and maintain your product properly and to avoid injury and product damage. You are responsible for operating the product properly and safely.

Visit www.Toro.com for more information, including safety tips, training materials, accessory information, help finding a dealer, or to register your product.

Whenever you need service, genuine Toro parts, or additional information, contact an Authorized Service Dealer or Toro Customer Service and have the model and serial numbers of your product ready. Figure 1 identifies the location of the model and serial numbers on the product. Write the numbers in the space provided.

***Important:*** **With your mobile device, you can scan the QR code (if equipped) on the serial number plate to access warranty, parts, and other product information.**

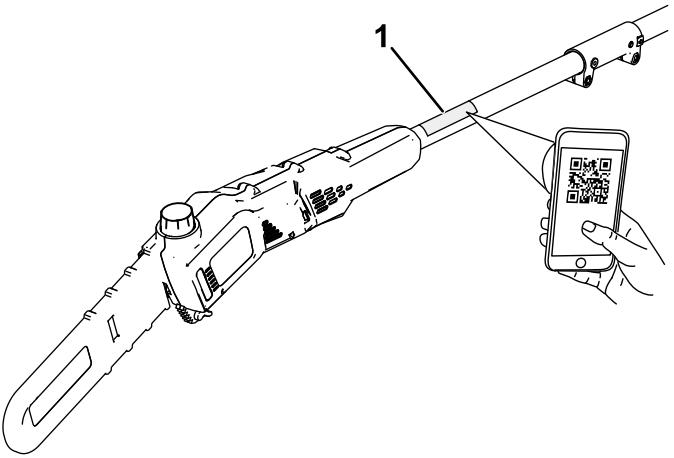


g425378

**Figure 1**

1. Model and serial number location.

**Model No.** _____

**Serial No.** _____

# Safety-Alert Symbol

The safety-alert symbol (Figure 2) shown in this manual and on the machine identifies important safety messages that you must follow to prevent accidents.



g000502

**Figure 2**
Safety-alert symbol

---

The safety-alert symbol appears above information that alerts you to unsafe actions or situations and is followed by the word **DANGER**, **WARNING**, or **CAUTION**.

**DANGER** indicates an imminently hazardous situation which, if not avoided, **will** result in death or serious injury.

**WARNING** indicates a potentially hazardous situation which, if not avoided, **could** result in death or serious injury.

**CAUTION** indicates a potentially hazardous situation which, if not avoided, **may** result in minor or moderate injury.

This manual uses two other words to highlight information. **Important** calls attention to special mechanical information and **Note** emphasizes general information worthy of special attention.

# Safety

**⚠ WARNING**

**Read all safety warnings, instructions, illustrations and specifications provided with this power tool.**

***Failure to follow all instructions listed below may result in electric shock, fire and/or serious injury.***

**Save all warnings and instructions for future reference.**

*The term "power tool" in all the warnings refers to your mains-operated (corded) power tool or battery-operated (cordless) power tool.*

# IMPORTANT SAFETY INSTRUCTIONS

## I. Work area safety

1. **Keep work area clean and well lit.** *Cluttered or dark areas invite accidents.*
2. **Do not operate power tools in explosive atmospheres, such as in the presence of flammable liquids, gases, or dust.** *Power tools create sparks which may ignite the dust or fumes.*
3. **Keep children and bystanders away while operating a power tool.** *Distractions can cause you to lose control.*

## II. Electrical safety

1. **Power tool plugs must match the outlet. Never modify the plug in any way. Do not use any adapter plugs with earthed (grounded) power tools.** *Unmodified plugs and matching outlets will reduce risk of electric shock.*
2. **Avoid body contact with earthed or grounded surfaces, such as pipes, radiators, ranges and refrigerators.** *There is an increased risk of electric shock if your body is earthed or grounded.*
3. **Do not expose power tools to rain or wet conditions.** *Water entering a power tool will increase the risk of electric shock.*
4. **Do not abuse the cord. Never use the cord for carrying, pulling or unplugging the power tool. Keep cord away from heat, oil, sharp edges or moving parts.** *Damaged or entangled cords increase the risk of electric shock.*

5. **When operating a power tool outdoors, use an extension cord suitable for outdoor use.** *Use of a cord suitable for outdoor use reduces the risk of electric shock.*

6. **If operating a power tool in a damp location is unavoidable, use a residual current device (RCD) protected supply.** *Use of an RCD reduces the risk of electric shock.*

## III. Personal safety

1. **Stay alert, watch what you are doing and use common sense when operating a power tool. Do not use a power tool while you are tired or under the influence of drugs, alcohol, or medication.** *A moment of inattention while operating power tools may result in serious personal injury.*

2. **Use personal protective equipment. Always wear eye protection.** *Protective equipment such as dust mask, non-skid safety shoes, hard hat, or hearing protection used for appropriate conditions reduces personal injuries.*

3. **Prevent unintentional starting. Ensure the switch is in the OFF-position before connecting to power source and/or battery pack, picking up or carrying the tool.** *Carrying power tools with your finger on the switch or energizing power tools that have the switch on invites accidents.*

4. **Remove any adjusting key or wrench before turning the power tool on.** *A wrench or a key left attached to a rotating part of the power tool may result in personal injury.*

5. **Do not overreach. Keep proper footing and balance at all times.** *This enables better control of the power tool in unexpected situations.*

6. **Dress properly. Do not wear loose clothing or jewelry. Keep your hair and clothing away from moving parts.** *Loose clothes, jewelry, or long hair can be caught in moving parts.*

7. **If devices are provided for the connection of dust extraction and collection facilities, ensure these are connected and properly used.** *Use of dust collection can reduce dust-related hazards.*

8. **Do not let familiarity gained from frequent use of tools allow you to become complacent and ignore tool safety principles.** *A careless action can cause severe injury within a fraction of a second.*

## IV. Power tool use and care

1. **Do not force the power tool. Use the correct power tool for your application.** *The correct power tool will do the job better and safer at the rate for which it was designed.*
2. **Do not use the power tool if the switch does not turn it on and off.** *Any power tool that cannot be controlled with the switch is dangerous and must be repaired.*
3. **Disconnect the plug from the power source and/or remove the battery pack, if detachable, from the power tool before making any adjustments, changing accessories, or storing power tools.** *Such preventive safety measures reduce the risk of starting the power tool accidentally.*
4. **Store idle power tools out of the reach of children and do not allow persons unfamiliar with the power tool or these instructions to operate the power tool.** *Power tools are dangerous in the hands of untrained users.*
5. **Maintain power tools and accessories. Check for misalignment or binding of moving parts, breakage of parts, and any other condition that may affect the power tool's operation. If damaged, have the power tool repaired before use.** *Many accidents are caused by poorly maintained power tools.*
6. **Keep cutting tools sharp and clean.** *Properly maintained cutting tools with sharp cutting edges are less likely to bind and are easier to control.*
7. **Use the power tool, accessories, and tool bits etc. in accordance with these instructions, taking into account the working conditions and the work to be performed.** *Use of the power tool for operations different from those intended could result in a hazardous situation.*
8. **Keep handles and grasping surfaces dry, clean and free from oil and grease.** *Slippery handles and grasping surfaces do not allow for safe handling and control of the tool in unexpected situations.*

## V. Battery tool use and care

1. **Recharge only with the charger specified by the manufacturer.** *A charger that is suitable for one type of battery pack may create a risk of fire when used with another battery pack.*
2. **Use power tools only with specifically designated battery packs.** *Use of any other battery packs may create a risk of injury and fire.*
3. **When battery pack is not in use, keep it away from other metal objects, like paper clips, coins, keys, nails, screws or other small metal objects, that can make a connection from one terminal to another.** *Shorting the battery terminals together may cause burns or a fire.*
4. **Under abusive conditions, liquid may be ejected from the battery; avoid contact. If contact accidentally occurs, flush with water. If liquid contacts eyes, additionally seek medical help.** *Liquid ejected from the battery may cause irritation or burns.*
5. **Do not use a battery pack or tool that is damaged or modified.** *Damaged or modified batteries may exhibit unpredictable behavior resulting in fire, explosion or risk of injury.*
6. **Do not expose a battery pack or tool to fire or excessive temperature.** *Exposure to fire or temperature above 130 °C (265 °F) may cause explosion.*
7. **Follow all charging instructions and do not charge the battery pack or tool outside the temperature range specified in the instructions.** *Charging improperly or at temperatures outside the specified range may damage the battery and increase the risk of fire.*

## VI. Service

1. **Have your power tool serviced by a qualified repair person using only identical replacement parts.** *This will ensure that the safety of the power tool is maintained.*
2. **Never service damaged battery packs.** *Service of battery packs should only be performed by the manufacturer or authorized service providers.*

## VII. Pole saw safety

1. **Keep all parts of the body away from the saw chain when the pole-mounted pruner is operating. Before you start the pole-mounted pruner, make sure the saw chain is not contacting anything.** *A moment of inattention while operating the pole-mounted pruner may cause entanglement of your clothing or body with the saw chain.*
2. **Always use two hands when operating the pole-mounted pruner.** *Hold the pole-mounted pruner with both hands to avoid loss of control.*
3. **To reduce the risk of electrocution, never use the pole-mounted pruner near any electrical power lines.** *Contact with or use near power lines may cause serious injury or electric shock resulting in death.*
4. **Hold the pole-mounted pruner by insulated gripping surfaces only, because the saw chain may contact hidden wiring.** *Saw chains contacting a "live" wire may make exposed metal parts of the pole-mounted pruner "live" and could give the operator an electric shock.*
5. **Wear eye and ear protection. Further protective equipment for hands and slip-resistant footwear is recommended.** *Adequate protective equipment will reduce the risk of personal injury.*
6. **Always use head protection when operating the pole-mounted pruner overhead.** *Falling debris can result in serious personal injury.*
7. **Always keep proper footing and operate the pole-mounted pruner only when standing on fixed, secure and level surface.** *Slippery or unstable surfaces may cause a loss of balance or control of the machine.*
8. **Do not operate a pole-mounted pruner in a tree, on a ladder, from a rooftop, or any unstable support.** *Operation of a pole-mounted pruner in this manner may result in loss of balance, loss of control and personal injury.*
9. **Keep all power cords and cables away from cutting area.** *Power cords or cables may be hidden in trees and can be accidentally cut by the saw chain.*
10. **Do not use the pole-mounted pruner in bad weather conditions, especially when there is a risk of lightning.** *This decreases the risk of being struck by lightning.*
11. **When cutting a limb that is under tension, be alert for spring back.** *When the tension in the wood fibers is released, the spring*

*loaded limb may strike the operator and/or throw the pole-mounted pruner out of control.*

12. **Use extreme caution when cutting brush and saplings.** *The slender material may catch the saw chain and be whipped toward you or pull you off balance.*

13. **When carrying the pole-mounted pruner with the machine switched off, take care not to operate any power switch and keep the saw chain or saw blade away from your body.** *Proper carrying of the pole-mounted pruner will reduce the likelihood of accidental contact with the saw chain.*

14. **When transporting or storing the pole-mounted pruner, always fit the guide bar cover.** *Proper handling of the pole-mounted pruner will reduce the likelihood of accidental contact with the moving saw chain.*

15. **When clearing jammed material, storing or servicing the pole-mounted pruner, make sure the switch is off and the battery pack is removed.** *Unexpected actuation of the pole-mounted pruner while clearing jammed material or servicing may result in serious personal injury.*

16. **Cut wood only. Do not use pole-mounted pruner for purposes not intended. For example: do not use the pole-mounted pruner for cutting plastic, metal, masonry or non-wood building materials.** *Use of the pole-mounted pruner for operations different than intended could result in a hazardous situation.*

17. **Carry the pole saw with both hands, the pole saw switched off and away from your body. When transporting or storing the pole saw, always fit the guide bar cover.** *Proper handling of the pole saw will reduce the likelihood of accidental contact with the moving saw chain.*

18. **Do not remove cut material or hold material to be cut when the saw chain is moving.** *Make sure the switch is off and the battery disconnected when clearing jammed material. Saw chain continues to move after the switch is turned off.*

19. **Follow instructions for lubricating, chain tensioning, changing the bar and chain.** *Improperly tensioned or lubricated chain may either break or increase the chance for kickback.*

20. **This pole saw is not intended for tree felling.** *Use of the pole saw for operations different than intended could result in serious injury to the operator or bystanders.*

21. **Avoid kickback.** *Kickback may occur when the nose or tip of the guide bar touches an object, or when the wood closes in and pinches the saw chain in the cut.*

    *Tip contact in some cases may cause a sudden reverse reaction, kicking the guide bar up and back toward you.*

    *Pinching the saw chain along the top of the guide bar may push the guide bar rapidly back toward you.*

    *Either of these reactions may cause you to lose control of the saw, which could result in serious personal injury. Do not rely exclusively upon the safety devices built into your saw. As a pole saw user, you should take several steps to keep your cutting jobs free from accident or injury.*

    *Kickback is the result of tool misuse and/or incorrect operating procedures or conditions and can be avoided by taking proper precautions as given below:*

22. **Maintain a firm grip, with thumbs and fingers encircling the pole saw handles, with both hands on the handle and position your body and arm to allow you to resist kickback forces.** *Kickback forces can be controlled by the operator, if proper precautions are taken. Do not let go of the pole saw.*

23. **Only use replacement bars and chains specified by the manufacturer.** *Incorrect replacement bars and chains may cause chain breakage and/or kickback.*

24. **Follow the manufacturer's sharpening and maintenance instructions for the saw chain.** *Decreasing the depth gauge height can lead to increased kickback.*

# SAVE THESE INSTRUCTIONS

# Decal Symbols

Safety decals and instructions are easily visible to the operator and are located near any area of potential danger. Replace any decal that is damaged or missing.

The following tables describe the safety and instructional symbols that appear on the decals.

| Pole Saw Decal Symbol | Explanation |
|---|---|
|  | Cutting/dismemberment hazard of hands |
|  | Electrical shock hazard |
|  | Warning |
|  | Do not expose to rain. |
|  | Entanglement hazard—stay away from moving parts. |
|  | Keep away from powerlines. |
|  | Keep bystanders away. |
|  | Read the *Operator's Manual*. |
|  | Wear a hard hat. |
|  | Wear eye protection. |

| | |
|---|---|
|  | Wear hearing protection. |
|  | Wear gloves. |
|  | Wear substantial slip-resistant shoes. |

# Setup

***Important:*** **The battery pack is not fully charged when it is purchased. Before using the machine for the first time, refer to your battery pack and charger *Operator's Manual*.**

## Installing the Bar and Chain

**⚠ DANGER**

**Contact with the pole saw teeth can cause serious personal injury.**

- **Remove the battery pack before adjusting or maintaining the pole saw.**
- **Always wear gloves when adjusting or maintaining the pole saw.**

1. Place the pole saw on a flat surface and do not install the battery pack.
2. Remove the side cover; turn the bar cover knob counterclockwise until the knob is removed and then remove the side cover (Figure 3).

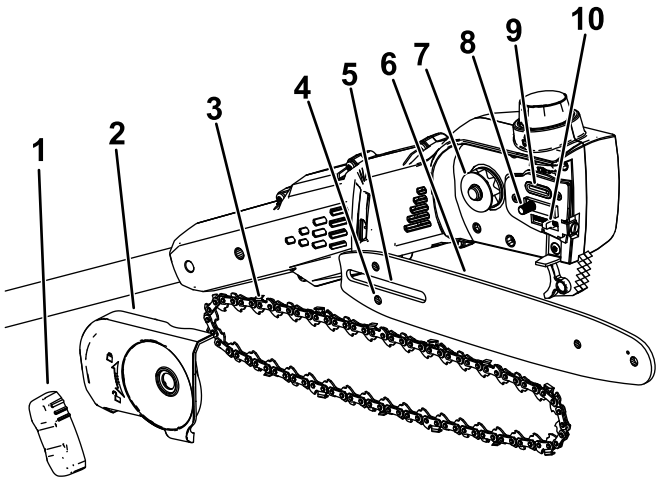


g374226

**Figure 3**

1. Bar cover knob
2. Side cover
3. Chain
4. Chain adjusting stud slot
5. Guide bar slot
6. Guide bar
7. Drive sprocket
8. Guide bar stud
9. Oil outlet
10. Chain adjusting stud

3. Place the chain around the sprocket on the front end of the guide bar, with the cutting edge of the chain teeth on the top of the bar facing forward as shown in the diagram beneath the side cover of the pole saw.
4. Continue to feed the chain around the guide bar and align the chain into the groove of the guide bar.
5. Position the open loop of the chain (the side not on the guide bar) around the drive sprocket on the pole saw (Figure 3).

   ***Important:*** **Ensure that the chain adjusting stud is inserted into the chain adjusting stud slot on the guide bar (Figure 3).**

   **You may need to rotate the chain-tensioning screw to fit the stud into the slot on the guide bar (Figure 20).**
6. Install the side cover and bar cover knob and loosely tighten the side cover by turning the knob clockwise.
7. Adjust the chain tension; refer to Adjusting the Chain Tension (page 36).

# Assembling the Pole Saw

1. Unfold the sections of the handle.

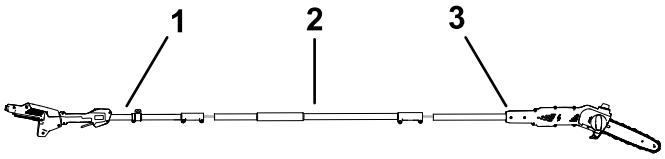


g535870

**Figure 4**

1. Handle pole section
2. Middle pole section
3. Saw pole section

---

2. Align the locking button on the middle pole section with the slotted hole at the end of the handle pole section and slide the 2 shafts together.

   **Note:** The locking button clicks into the slotted hole when the shafts are secured

3. Use the provided wrench to secure these 2 sections of the pole together (E of Figure 5).
4. Repeat this procedure to connect the saw pole section to the middle pole section (Figure 4).

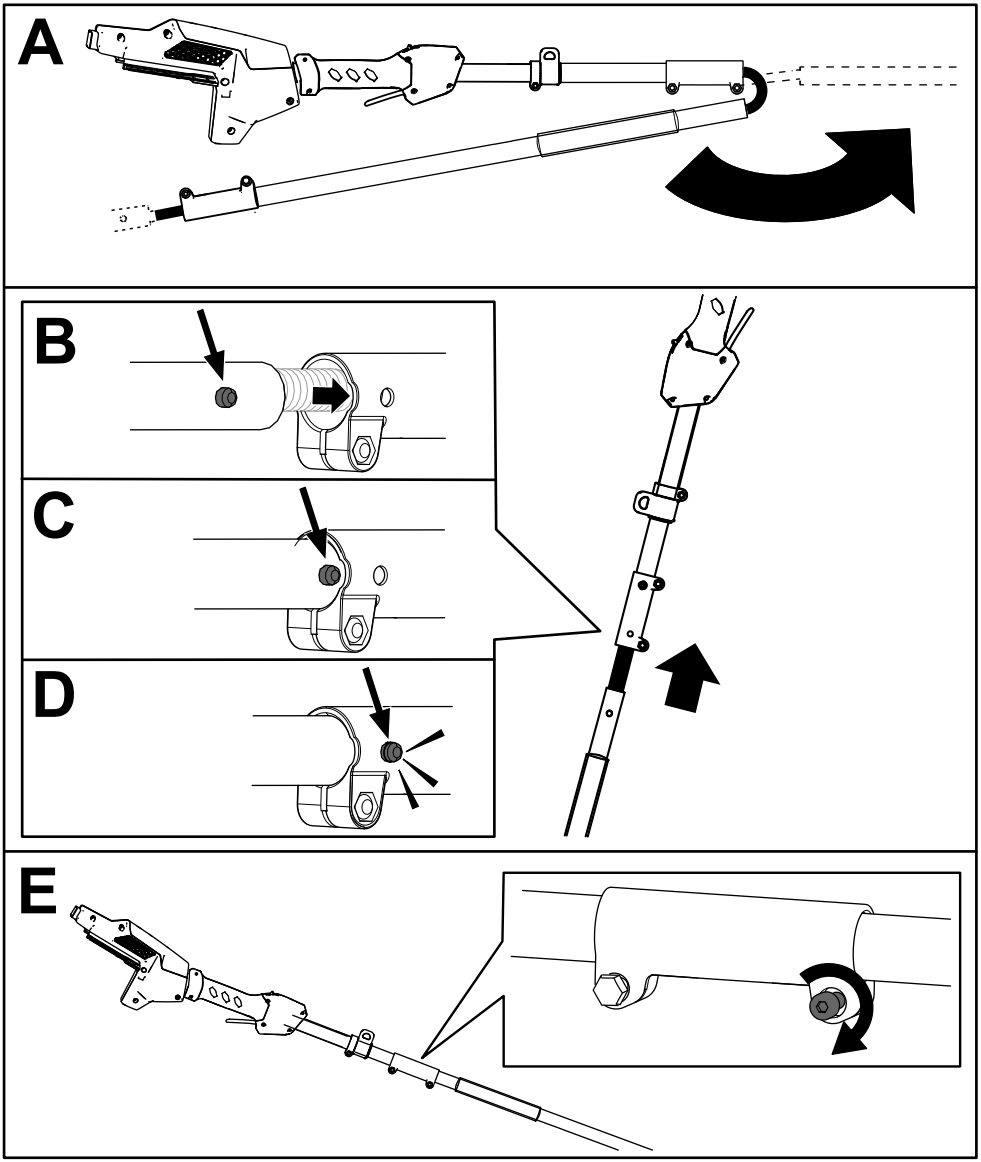


**Figure 5**

# Adding Bar and Chain Oil to the Pole Saw

***Important:*** **Use only bar and chain oil (sold separately).**

Fill the pole saw with bar and chain oil before first operation; refer to Checking the Oil Level and Adding Bar and Chain Oil (page 34).

# Installing the Harness

Connect the metal hook on the shoulder harness to the strap collar on the pole saw handle (Figure 6).

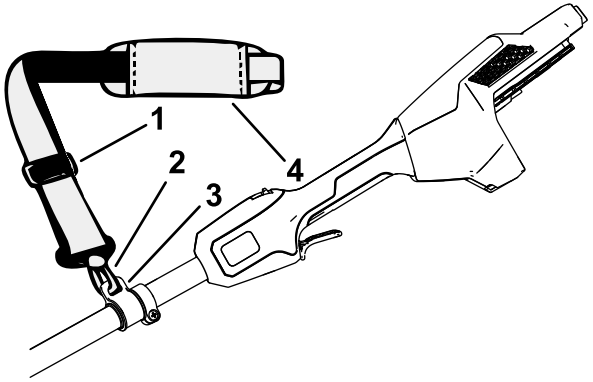


g374229

**Figure 6**

1. Strap adjuster
2. Metal strap hook
3. Strap collar
4. Shoulder strap

---

The strap length is adjustable; slide the strap adjuster up to decrease the length of the strap, or down to increase the length of the strap (Figure 6).

If there is ever an emergency and you need to rapidly remove the harness, disconnect the quick-release buckle as follows:

1. Press in on the sides of the buckle (A of Figure 7).
2. Allow the buckle to disconnect (B of Figure 7).

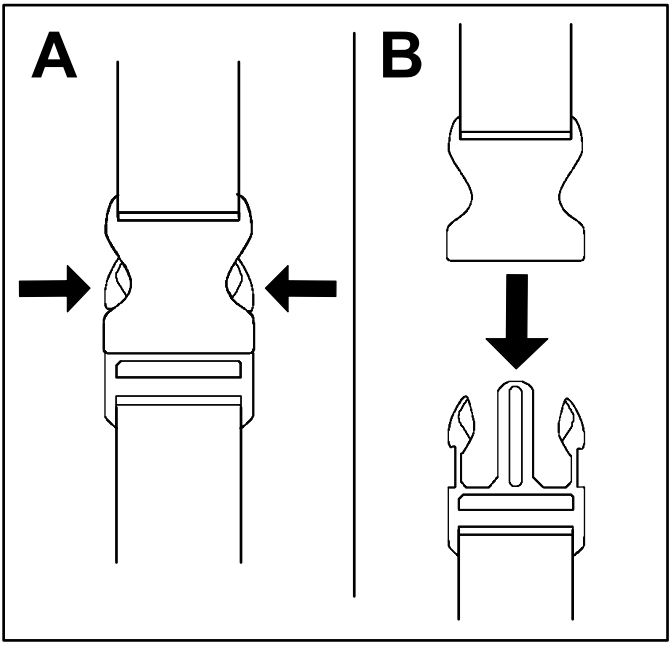


g340477

**Figure 7**

# Product Overview

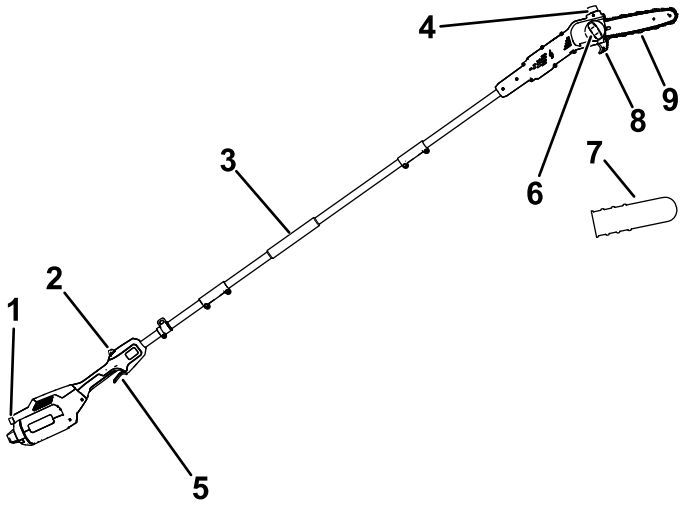


g374230

**Figure 8**

1. Button latch
2. Trigger lock
3. Front handle
4. Oil cap
5. Trigger
6. Bar cover knob
7. Guide bar cover
8. Cutting guide
9. Guide bar and chain

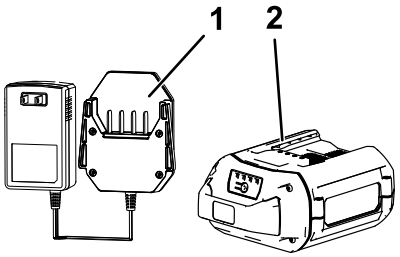


g535905

**Figure 9**

1. 1A battery charger (included with Model 51870)
2. 2.0 Ah battery pack (included with Model 51870)

# Specifications

| | |
|---|---|
| **Model** | 51870/51870T |
| **Bar Length (with 88619 and 88621 equipped)** | 25.4 cm (10 inches) |
| **Chain Gauge (with 88619 and 88621 equipped)** | 0.050 inches |
| **Chain Pitch (with 88619 and 88621 equipped)** | 1/4 inch |
| **Chain Length (with 88619 and 88621 equipped)** | 58 links |
| **Rated Voltage** | 60V DC maximum, 54 VDC nominal usage |
| **Weight (without a battery)** | 4.1 kg (9 lbs) |
| **Charger Type** | Flex-Force 60V lithium-ion chargers |
| **Battery Type** | Flex-Force 60V lithum-ion batteries* |

*If you are using this machine with a battery pack that is 4.0 Ah or greater you must install the included quick-release harness for proper support and balance.

## Appropriate Temperature Ranges

| | |
|---|---|
| Charge/store the battery pack at | 5°C (41°F) to 40°C (104°F)* |
| Use the battery pack at | -30°C (-22°F) to 49°C (120°F)* |
| Use the tool at | 0°C (32°F) to 49°C (120°F)* |

*Charging time will increase if you do not charge the battery within this range.

Store the tool, battery pack, and battery charger in an enclosed clean, dry area.

## Attachments/Accessories

A selection of Toro approved attachments and accessories is available for use with the machine to enhance and expand its capabilities. Contact your Authorized Service Dealer or authorized Toro distributor or go to www.Toro.com for a list of all approved attachments and accessories.

To ensure optimum performance and continued safety certification of the machine, use only genuine Toro replacement parts and accessories. Replacement parts and accessories made by other manufacturers could be dangerous.

# Operation

## Before Using the Pole Saw

Before using the pole saw, do the following:

- Check the chain tension; refer to Adjusting the Chain Tension (page 36).
- Clean the pole saw components, inspect them for excessive wear or damage, and replace them as needed; refer to Servicing the Guide Bar, Chain, and Drive Sprocket (page 39).
- Check the chain for sharpness and damage, and sharpen or replace as needed; refer to Sharpening the Chain (page 42).
- Check the oil level; refer to Checking the Oil Level and Adding Bar and Chain Oil (page 34).
- Check the pole saw for damage, general appearance, and performance; ensure that the switches move freely, the vents and handles are clean, and the bar is not bent or damaged.

# Starting the Pole Saw

***Important:*** **Use the battery pack only in temperatures that are within the appropriate range; refer to Specifications (page 21).**

1. Ensure that the vents on the pole saw are free from dust and debris (Figure 10).

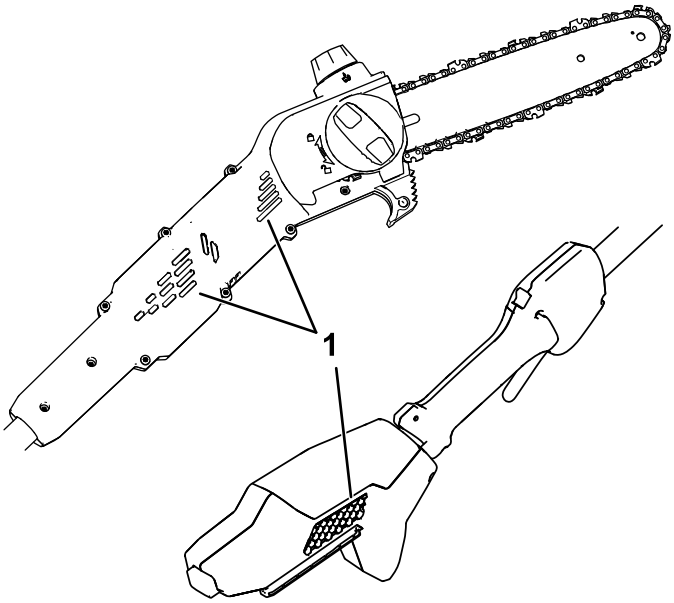


g374231

**Figure 10**

1. Vents

2. Set the pole saw down on a level surface.
3. Align the cavity in the battery pack with the tongue on the handle housing (Figure 11).

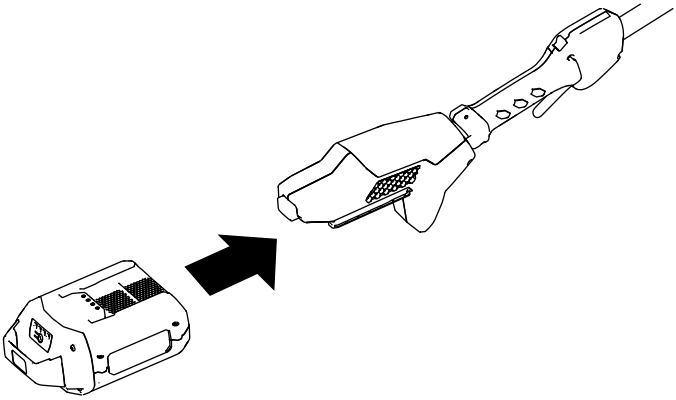

g334268

**Figure 11**

4. Push the battery pack into the handle until the battery pack locks into place.
5. Remove the protective cover from the chain.
6. Press the trigger lock, then press the trigger to start the pole saw.

## Shutting Off the Pole Saw

To shut off the pole saw, release the trigger.

Whenever you are not using the saw or are transporting the saw to or from the work area remove the battery pack; refer to Removing the Battery Pack (page 30).

# Cutting with the Pole Saw

**⚠ WARNING**

**Operating a pole saw improperly can cause serious personal injury or death.**

**Read and follow all operating instructions carefully to avoid possible personal injury.**

**⚠ WARNING**

**Do not operate near electrical power lines; the pole saw has not been designed to provide protection from electric shock in the event of contact with overhead electric lines,**

**Consult local regulations for safe distances from overhead electric power lines and ensure that the operating position is safe and secure before operating the pole saw.**

**⚠ WARNING**

**Kickback can cause serious or fatal injury to you.**

**Avoid touching objects to be cut with the nose of the pole saw guide bar.**

There are 2 types of kickback:

- A fast **upward** motion of the pole saw that results when the chain at the nose or top of the bar contacts an object
- A fast **backward** motion of the pole saw that results when the chain at the nose or top of the bar is pinched by the object being cut

Figure 12 shows the area of the bar to avoid contacting an object to prevent kickback.

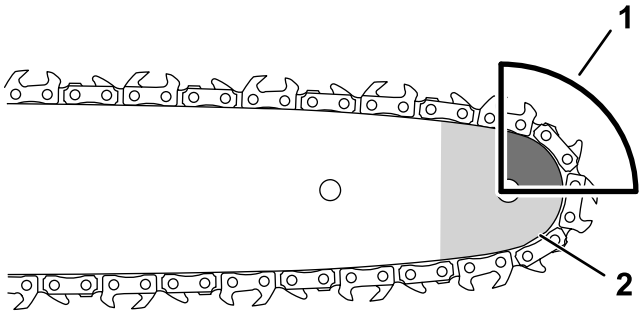


g318677

**Figure 12**

1. Kickback area (nose, top of the bar)
2. Nose

---

1. Grip the pole saw with 2 hands.
2. Stand on solid, even ground in front of the tree to be trimmed and position yourself for balanced, stable footing while cutting.
3. Ensure that you only cut the wood that you intend to cut; do not allow the saw chain to contact the earth, other logs, or any other objects when cutting.
4. Ensure that the saw chain is rotating at full speed before starting a cut.
5. Cut with the branch near the rear of the guide bar, close to the cutting guide; press the saw chain lightly against the wood and allow the weight of the pole saw to drive the cutting (Figure 13).

   ***Important:*** **If the chain binds in the cut, do not attempt to free it by running the motor. Shut off the pole saw, remove the battery, and lift the limb while holding the saw; this should release the pinch and free the pole saw.**

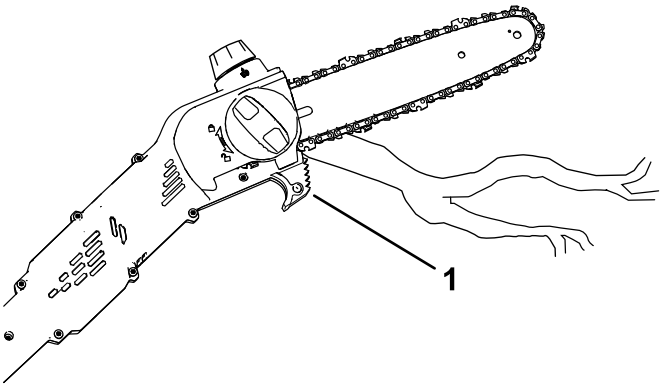


g374233

**Figure 13**

1. Cutting guide

---

6. Keep steady pressure on the pole saw, cutting in a straight line, and release pressure only near the end of the cut.
7. Release the trigger as soon as you complete a cut.

# Pruning a Tree

**⚠ WARNING**

**Cutting higher limbs from a tree off the ground can put you in an unstable position that could be unsafe for you while handling a pole saw, resulting in possible serious personal injury or death to you or bystanders.**

**When cutting limbs from a standing tree, use the following practices:**

- **Do not climb on limbs or branches with a pole saw.**
- **Do not overreach, and cut with both hands on the pole saw.**
- **Ensure that all bystanders are away from the area where branches may fall.**

1. Grip the pole saw as described in Cutting with the Pole Saw (page 25).
2. While cutting small branches, apply light pressure to the branch to be cut.
3. While cutting larger branches, make a shallow undercut and then complete the cut from the topside of the branch.
   A. Cut from the underside of the limb about 15 cm (6 inches) from the trunk. Cut a third of the way through the limb.
   B. Cut 5.0 to 10.0 cm (2 to 4 inches) farther out on the limb and from above. Cut the limb until it falls.
   C. Cut the limb stub at the branch collar (Figure 14).

      ***Important:*** **Do not cut the limb past the collar, flush to the trunk, or leave a large limb stub; this damages the tree.**

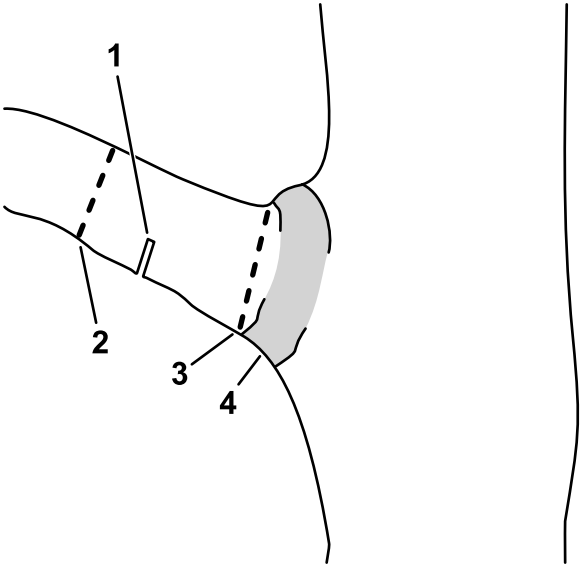


g316577

**Figure 14**

1. First relief undercut
2. Second through cut
3. Final pruning cut to remove the limb stub
4. Branch collar (where the trunk transitions to the limb)

# Removing the Battery Pack

1. Place the pole saw on a flat surface.
2. Press down on the latch button and remove the battery pack from the handle.

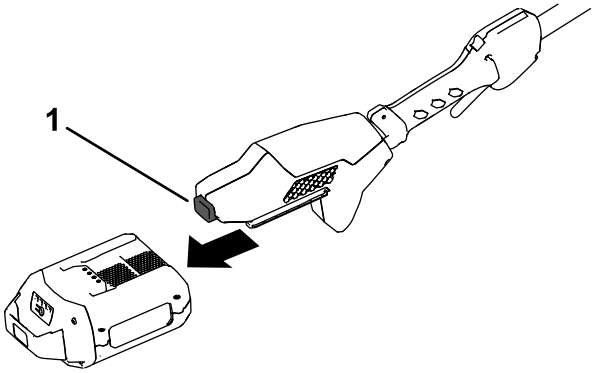


g334555

**Figure 15**

1. Latch button

# Charging the Battery Pack

***Important:*** **The battery pack is not fully charged when you purchase it. Before using the tool for the first time, place the battery pack in the charger and charge it until the LED display indicates the battery pack is fully charged. Read all safety precautions.**

***Important:*** **Charge the battery pack only in temperatures that are within the appropriate range; refer to Specifications (page 21).**

**Note:** At any time, press the battery-charge-indicator button on the battery pack to display the current charge (LED indicators).

1. Ensure that the vents and charging terminals on the battery pack and charger are clear of any dust and debris.

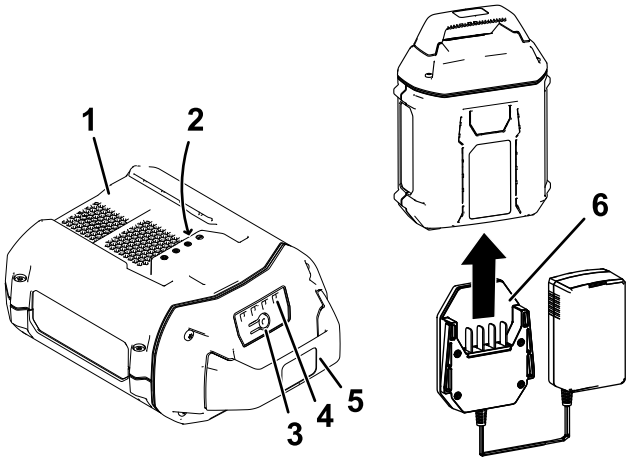


**Figure 16**

1. Battery-pack cavity
2. Battery-pack terminals
3. Battery-charge-indicator button
4. LED indicators (current charge)
5. Handle
6. Charger

2. Line up the cavity in the battery pack (Figure 16) with the tongue on the charger.
3. Slide the battery pack into the charger until it is fully seated (Figure 16).
4. To remove the battery pack, slide the battery backward out of the charger.

5. Refer to the following table to interpret the LED indicator light on the battery charger.

## Battery Charge Status

| Charger Symbol | Indicator Light | Indicates |
|---|---|---|
|  | Green blinking | Battery pack is charging |
| 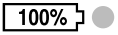 | Green | Battery pack is charged |
|  | Red | Battery pack and/or battery charger is over or under the appropriate temperature range |
| 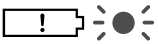 | Red blinking | Battery pack charging fault* |
| | Off | No battery pack inserted |

*Refer toTroubleshooting (page 43) for more information.

***Important:*** **The battery pack can be left on the charger for short periods between uses.**

**If the battery pack will not be used for longer periods, remove the battery pack from the charger; refer to Storage (page 42).**

# Maintenance

## Recommended Maintenance Schedule(s)

| Maintenance Service Interval | Maintenance Procedure |
|---|---|
| Before each use or daily | • Check the oil level and add bar and chain oil if necessary.<br>• Check that oil is flowing to the chain.<br>• Check the chain tension and adjust it if necessary.<br>• Ensure that the bar is straight and undamaged<br>• Check the chain for sharpness; contact an Authorized Service Dealer to have the chain sharpened or replaced. |
| After each battery drain cycle | • Check the oil level and add bar and chain oil if necessary.<br>• Check the chain tension and adjust it if necessary. |
| Yearly or before storage | • Service the guide bar, chain, and drive sprocket.<br>• Check the chain for sharpness; contact an Authorized Service Dealer to have the chain sharpened or replaced. |

# Checking the Oil Level and Adding Bar and Chain Oil

**Service Interval:** Before each use or daily

After each battery drain cycle

***Important:*** **Use only bar and chain oil (sold separately).**

1. Shut off the pole saw and remove the battery pack; refer to Removing the Battery Pack (page 30).
2. Check the oil level in the window. If the oil does not fill the window, add bar and chain oil as needed (Figure 17).

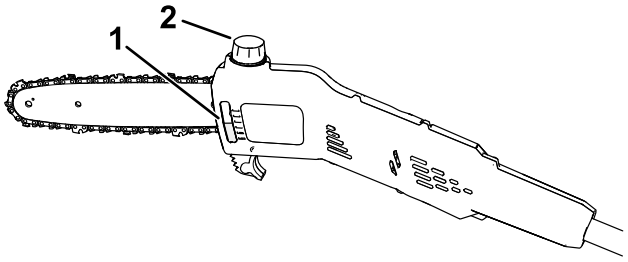


g374235

**Figure 17**

1. Oil window
2. Oil cap

3. Place the pole saw on a flat surface with the oil cap facing up.
4. Clean the area around the oil cap (Figure 17).

   **Note:** Ensure that you do not allow debris/wood chips to enter the oil tank.
5. Remove the cap, and pour bar and chain oil into the pole saw until the oil fills the tank (Figure 17).

   ***Important:*** **Do not fill the pole saw higher than the bottom of the fill neck.**
6. Clean up any spilled oil and secure the oil cap.
7. Ensure that oil is flowing to the chain; refer to Checking the Flow of Bar and Chain Oil (page 35).

# Checking the Flow of Bar and Chain Oil

**Service Interval:** Before each use or daily

1. Prepare to use the pole saw; refer to Before Using the Pole Saw (page 22).
2. To ensure that oil is flowing to the chain, point the nose of the pole saw a few inches from a surface (e.g. paper, cardboard, a stump) and run the pole saw; you should be able to see a light spray of oil on the surface (Figure 18).

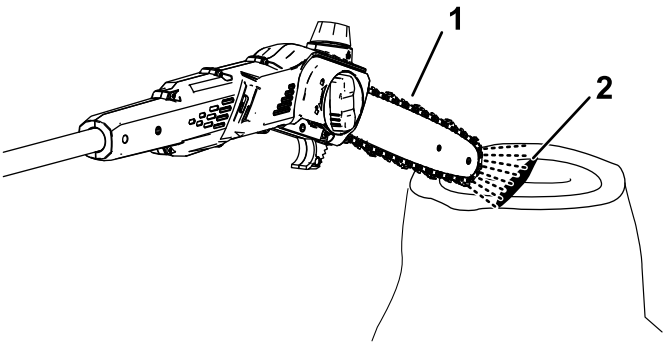


g374236

**Figure 18**

1. Run the pole saw a few inches from a surface.
2. If the oil is flowing, it will spray off the chain and accumulate.

3. If oil is not flowing, ensure that there is oil in the tank and that the area under the side cover is clean; refer to Checking the Oil Level and Adding Bar and Chain Oil (page 34) and Servicing the Guide Bar, Chain, and Drive Sprocket (page 39).

# Adjusting the Chain Tension

**Service Interval:** Before each use or daily

After each battery drain cycle

Ensure that the chain is properly tensioned.

A loose chain shortens the life of the drive sprocket and the guide bar and may cause the chain to fall off.

An overtightened chain overheats the guide bar and chain, causing rapid wear, and may burn out the motor or break the chain.

The chain tension is correct when you are able to use a gloved hand to pull the chain smoothly around the guide bar. The chain should remain in contact with the bottom edge of the guide bar.

Also, check the chain tension of a new chain after a few cuts; a new chain usually stretches and requires adjustment after a few cuts.

**⚠ DANGER**

**Contact with the pole saw teeth can cause serious personal injury.**

- **Remove the battery pack before adjusting or maintaining the pole saw.**
- **Always wear gloves when adjusting or maintaining the pole saw.**

1. Place the pole saw on a level surface and remove the battery pack; refer to Removing the Battery Pack (page 30).
2. Allow the saw chain to cool.

   ***Important:*** **Do not tension a hot chain; it may contract as it cools, resulting in an overtightened chain.**
3. Inspect the guide bar for bends or damage, replace if necessary.
4. Turn the bar cover knob counterclockwise to loosen the bar cover, but do not remove it (Figure 19).

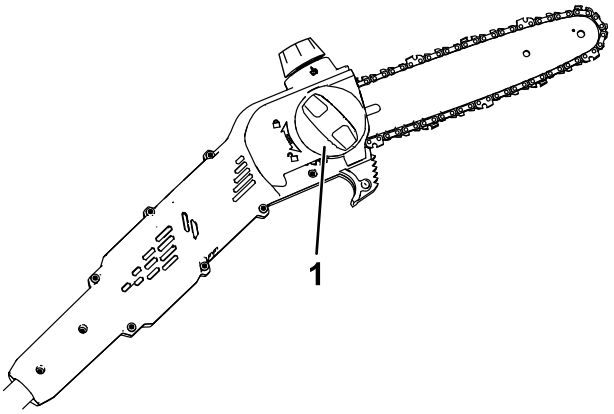


g374237

**Figure 19**

1. Bar cover knob

5. Adjust the chain tension using the chain tensioning screw (Figure 20), and then secure the side cover to the pole saw by turning the bar cover knob clockwise before checking the tension (Figure 19).
   - **To tighten the chain,** turn the chain tensioning screw clockwise.
   - **To loosen the chain,** turn the chain tensioning screw counterclockwise.

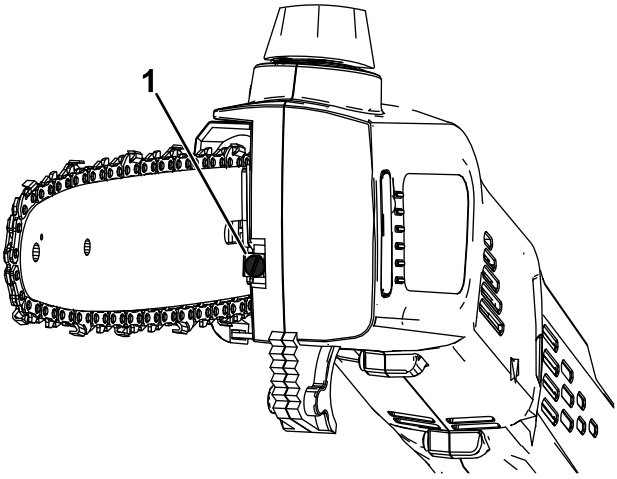


g374238

**Figure 20**

1. Chain tensioning screw

---

Adjust the chain tension until the chain touches the bottom edge of the guide bar, then pull the chain away from the bottom edge of the guide bar; a properly adjusted chain can only be pulled 3.2 to 6.4 mm (1/8 to 1/4 inch) away from the guide bar, and snaps back on release.

**Note:** While adjusting the chain tension, lift up the tip of the guide bar with a gloved hand to ensure the guide bar does not sag and affect chain tension.

6. Use a gloved hand to pull the chain around the guide bar. A properly tensioned chain should move smoothly and remain in contact with the bottom edge of the guide bar.
7. If the chain is not properly tensioned, repeat steps 4 through 7.

# Servicing the Guide Bar, Chain, and Drive Sprocket

Yearly or before storage

**⚠ DANGER**

**Contact with the pole saw teeth can cause serious personal injury.**

- **Remove the battery pack before adjusting or maintaining the pole saw.**
- **Always wear gloves when adjusting or maintaining the pole saw.**

1. Place the pole saw on a flat surface and remove the battery pack; refer to Removing the Battery Pack (page 30).
2. Remove the side cover; turn the bar cover knob counterclockwise until the knob is removed and then remove the side cover (Figure 21).

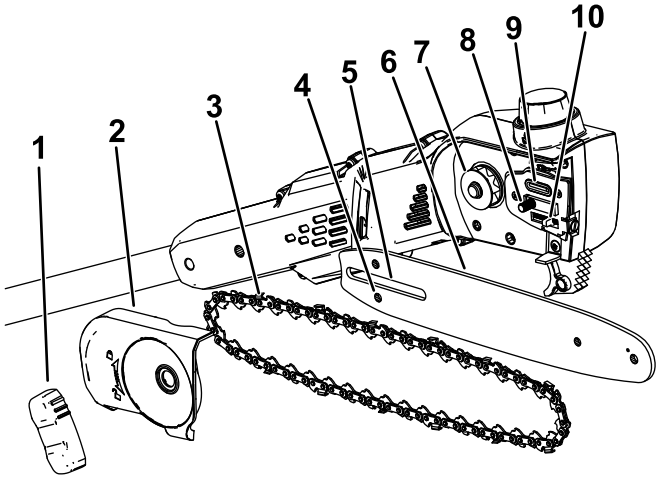


g374226

**Figure 21**

1. Bar cover knob
2. Side cover
3. Chain
4. Chain adjusting stud slot
5. Guide bar slot
6. Guide bar
7. Drive sprocket
8. Guide bar stud
9. Oil outlet
10. Chain adjusting stud

3. Loosen the chain by turning the chain-tightening screw counterclockwise (Figure 20).
4. Separate the chain from the guide bar and set them aside.
5. Clean any debris from the area under the side cover.
6. Inspect the drive sprocket; if it is excessively worn or damaged, replace it; contact your authorized service dealer.
7. Check the oil outlet (Figure 21) for debris and clean the area if necessary.
8. Clean the guide bar and chain; use a wire or a small flat-head screwdriver to remove dirt and debris from the groove along the edge of the guide bar, starting from the sprocket on the front end and moving rearward.

   Ensure that the oil channel in the bar that aligns with the oil outlet on the pole saw is clean so that oil can flow freely to the chain (Figure 22).

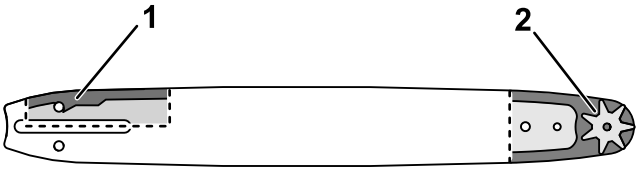


g315856

**Figure 22**

Internal sections of the guide bar shown

1. Ensure that this channel connecting to the oil outlet is clean.
2. Ensure that the bar sprocket is clean and rotates freely.

9. Inspect the guide bar and chain; if the bar is bent, the grooves are damaged, or if the sprocket on the front end does not rotate freely, replace the guide bar; if the chain is excessively worn or damaged, replace it.
10. Install the guide bar and chain; refer to Installing the Guide Bar and Chain (page 41).
11. Ensure that oil is flowing to the chain; refer to Checking the Flow of Bar and Chain Oil (page 35).

# Installing the Guide Bar and Chain

**⚠ DANGER**

**Contact with the pole saw teeth can cause serious personal injury.**

- **Remove the battery pack before adjusting or maintaining the pole saw.**
- **Always wear gloves when adjusting or maintaining the pole saw.**

1. If the side cover is installed to the machine, remove it; refer to Servicing the Guide Bar, Chain, and Drive Sprocket (page 39).
2. Place the chain around the sprocket on the front end of the guide bar, **with the cutting edge of the chain teeth on the top of the bar facing forward** as shown in the diagram beneath the side cover of the pole saw.
3. Feed the chain around the guide bar and align the chain into the groove of the guide bar.

   **Note:** If you are installing a new chain, flip the guide bar to avoid uneven wear.
4. Position the open loop of the chain (not on the guide bar) around the drive sprocket on the pole saw and install the guide bar and attached chain onto the pole saw.

   ***Important:*** **Ensure that the chain adjusting stud is inserted into the chain adjusting stud slot on the guide bar (Figure 21). You may need to rotate the chain-tensioning screw to fit the stud into the hole in the guide bar.**
5. Install the side cover, but do not fully tighten the side cover knob.
6. Adjust the chain tension; refer to Adjusting the Chain Tension (page 36).

## Sharpening the Chain

Yearly or before storage

A sharp chain ensures better cutting performance and longer battery life.

The chain needs to be sharpened or replaced if you must force it onto the wood, or if it produces sawdust instead of full wood chips.

Contact an Authorized Service Dealer to have the chain sharpened or replaced.

## Service

Should the pole saw need service, take the tool to your Authorized Service Dealer.

# Storage

***Important:*** **Store the machine, battery pack, and charger only in temperatures that are within the appropriate range; refer to** **Specifications (page 21)****.**

***Important:*** **If you are storing the machine for a year or longer, remove the battery pack from the machine and charge the battery pack until 1 or 2 LED indicators turn green on the battery. Do not store a fully charged or fully depleted battery. When you are ready to use the machine again, charge the battery pack until the left indicator light turns green on the charger or all 4 LED indicators turn green on the battery.**

- Disconnect the machine from the power supply (i.e., remove the battery pack) and check for damage after use.
- Clean all foreign material from the machine.
- Do not store the machine or charger with the battery pack installed.
- When not in use, store the machine, battery pack, and battery charger out of the reach of children.
- Keep the machine, battery pack, and battery charger away from corrosive agents such as garden chemicals and de-icing salts.
- To reduce the risk of serious personal injury, do not store the battery pack outside or in vehicles.
- Store the machine, battery pack, and battery charger in an enclosed clean, dry area.

## Preparing the Battery Pack for Recycling

***Important:*** **Upon removal, cover the terminals of the battery pack with heavy-duty adhesive tape. Do not attempt to destroy or disassemble the battery pack or remove any of its components.**



Contact your local municipality or your authorized Authorized Service Dealer or distributor for more information on how to responsibly recycle the battery.

| | |
|---|---|
|  | Lithium-ion battery packs labeled with the Call2Recycle seal can be recycled at any participating retailer or battery recycling facility in the Call2Recycle program (US and Canada only). To locate a participating retailer or facility closest to you, please call 1-800-822-8837 or visit www.call2recycle.org. |
|  | Lithium-ion battery packs labeled with the High Energy Battery (HEB) seal shown here, and any 60V Flex-Force batteries 6.0 Ah or greater, can be recycled at any participating dealer or retailer in the Call2Recycle HEB program. To locate a participating dealer or retailer closest to you, please visit www.hebattery.org. |

If you cannot locate a participating retailer or facility nearby, or have questions about which recycling program your battery pack may qualify for, please visit the customer support site listed in the operator's manual for your tool/equipment for more information on how to responsibly recycle the battery pack.

If you are located outside of the US and Canada, please contact your Authorized Service Dealer or distributor for more information on how to responsibly recycle the battery pack.

# Troubleshooting

Perform only the steps described in these instructions. All further inspection, maintenance, and repair work must be performed by an authorized service center or a similarly qualified specialist if you cannot solve the problem yourself.

Always remove the battery from the tool when troubleshooting, inspecting, maintaining, or cleaning the tool.

| Problem | Possible Cause | Corrective Action |
|---|---|---|
| The pole saw does not run or does not run continuously. | 1. The battery pack is low on charge.<br>2. The battery pack is not fully seated.<br>3. The battery pack is over or under the appropriate temperature range.<br>4. The battery pack has exceeded high amperage limits.<br>5. There is moisture on the leads of the battery pack.<br>6. There is debris under the cover. | 1. Charge the battery pack.<br>2. Ensure that the battery pack is inserted all the way into the housing.<br>3. Move the battery pack to a place where it is dry and the temperature is between 5°C (41°F) and 40°C (104°F).<br>4. Release the trigger, then press the trigger switch.<br>5. Allow the battery pack to dry or wipe it dry.<br>6. Remove the cover and clean out any debris. |
| The pole saw runs, but the chain does not rotate. | 1. The chain is not properly seated on the drive sprocket.<br>2. There is debris under the cover. | 1. Install the chain and ensure that the links are properly seated in the drive sprocket.<br>2. Remove the cover and clean out any debris. |
| The pole saw does not properly cut. | 1. The chain is not tensioned correctly.<br>2. The chain is dull or damaged.<br>3. The guide bar is bent or the grooves are damaged.<br>4. The chain is installed backward.<br>5. The chain is not being lubricated properly. | 1. Set the proper tension on the chain.<br>2. Replace the chain.<br>3. Replace the guide bar<br>4. Install the chain correctly.<br>5. Check the oil level and ensure that oil is flowing to the chain. |
| The chain oil is not lubricating properly. | 1. The oil level is low.<br>2. The oil outlet is plugged.<br>3. There is debris under the cover.<br>4. The oil channel or groove in the guide bar is plugged. | 1. Check the oil level.<br>2. Clean out debris from the oil outlet.<br>3. Remove the cover and clean out any debris.<br>4. Clean out debris in the bar. |

| Problem | Possible Cause | Corrective Action |
|---|---|---|
| The battery pack loses charge quickly. | 1. The battery pack is over or under the appropriate temperature range. | 1. Move the battery pack to a place where it is dry and the temperature is between 5°C (41°F) and 40°C (104°F). |
| | 2. The chain is dull or damaged. | 2. Replace the chain. |
| | 3. The guide bar is bent or the grooves are damaged. | 3. Replace the guide bar |
| | 4. The machine is overloaded. | 4. Apply less pressure when cutting. |
| | 5. The chain is not being lubricated properly. | 5. Check the oil level and ensure that oil is flowing to the chain. |
| The battery charger is not working. | 1. The battery charger is over or under the appropriate temperature range. | 1. Unplug the battery charger and move it to a place where it is dry and the temperature is between 5°C (41°F) and 40°C (104°F). |
| | 2. The outlet that the battery charger is plugged into does not have power. | 2. Contact your licensed electrician to repair the outlet. |
| The LED indicator light on the battery charger is red. | 1. The battery charger and/or battery pack is over or under the appropriate temperature range. | 1. Unplug the battery charger and move the battery charger and battery pack to a place where it is dry and the temperature is between 5°C (41°F) and 40°C (104°F). |

| Problem | Possible Cause | Corrective Action |
|---|---|---|
| The LED indicator light on the battery charger is blinking red. | 1. There is an error in the communication between the battery pack and the charger. | 1. Remove the battery pack from the battery charger, unplug the battery charger from the outlet, and wait 10 seconds. Plug the battery charger into the outlet again and place the battery pack on the battery charger. If the LED indicator light on the battery charger is still blinking red, repeat this procedure again. If the LED indicator light on the battery charger is still blinking red after 2 attempts, properly dispose of the battery pack at a battery recycling facility. |
| | 2. The battery pack is weak. | 2. Contact your authorized service dealer if the battery is in warranty, or properly dispose of the battery pack at a battery recycling facility. |

# California Proposition 65 Warning Information

## What is this warning?

You may see a product for sale that has a warning label like the following:



**WARNING:** Cancer and Reproductive Harm—www.p65Warnings.ca.gov.

## What is Prop 65?

Prop 65 applies to any company operating in California, selling products in California, or manufacturing products that may be sold in or brought into California. It mandates that the Governor of California maintain and publish a list of chemicals known to cause cancer, birth defects, and/or other reproductive harm. The list, which is updated annually, includes hundreds of chemicals found in many everyday items. The purpose of Prop 65 is to inform the public about exposure to these chemicals.

Prop 65 does not ban the sale of products containing these chemicals but instead requires warnings on any product, product packaging, or literature with the product. Moreover, a Prop 65 warning does not mean that a product is in violation of any product safety standards or requirements. In fact, the California government has clarified that a Prop 65 warning "is not the same as a regulatory decision that a product is 'safe' or 'unsafe.'" Many of these chemicals have been used in everyday products for years without documented harm. For more information, go to https://oag.ca.gov/prop65/faqs-view-all.

A Prop 65 warning means that a company has either (1) evaluated the exposure and has concluded that it exceeds the "no significant risk level"; or (2) has chosen to provide a warning based on its understanding about the presence of a listed chemical without attempting to evaluate the exposure.

## Does this law apply everywhere?

Prop 65 warnings are required under California law only. These warnings are seen throughout California in a wide range of settings, including but not limited to restaurants, grocery stores, hotels, schools, and hospitals, and on a wide variety of products. Additionally, some online and mail order retailers provide Prop 65 warnings on their websites or in catalogs.

## How do the California warnings compare to federal limits?

Prop 65 standards are often more stringent than federal and international standards. There are various substances that require a Prop 65 warning at levels that are far lower than federal action limits. For example, the Prop 65 standard for warnings for lead is 0.5 µg/day, which is well below the federal and international standards.

## Why don't all similar products carry the warning?

- Products sold in California require Prop 65 labelling while similar products sold elsewhere do not.
- A company involved in a Prop 65 lawsuit reaching a settlement may be required to use Prop 65 warnings for its products, but other companies making similar products may have no such requirement.
- The enforcement of Prop 65 is inconsistent.
- Companies may elect not to provide warnings because they conclude that they are not required to do so under Prop 65; a lack of warnings for a product does not mean that the product is free of listed chemicals at similar levels.

## Why does Toro include this warning?

Toro has chosen to provide consumers with as much information as possible so that they can make informed decisions about the products they buy and use. Toro provides warnings in certain cases based on its knowledge of the presence of one or more listed chemicals without evaluating the level of exposure, as not all the listed chemicals provide exposure limit requirements. While the exposure from Toro products may be negligible or well within the "no significant risk" range, out of an abundance of caution, Toro has elected to provide the Prop 65 warnings. Moreover, if Toro does not provide these warnings, it could be sued by the State of California or by private parties seeking to enforce Prop 65 and subject to substantial penalties.




Count on it.