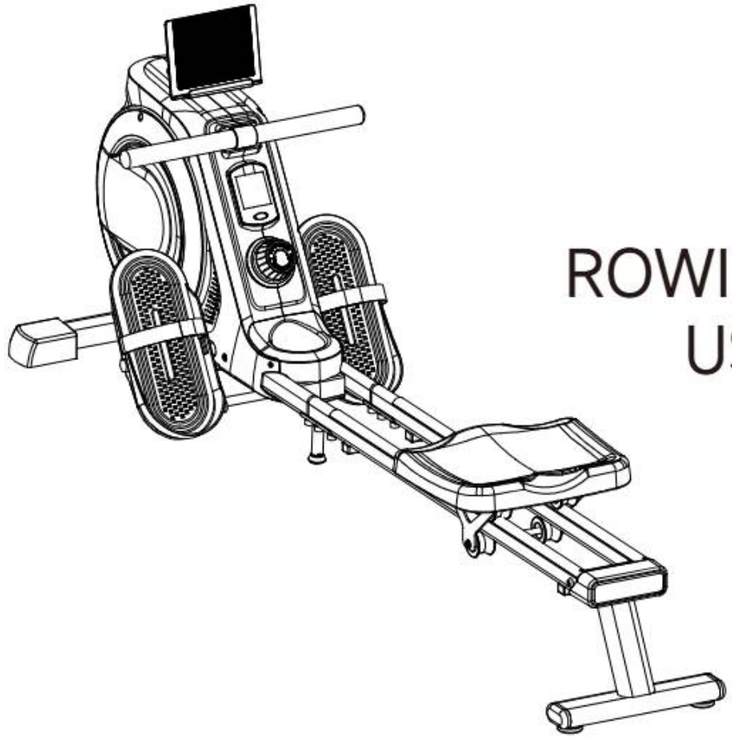

RM930

ROWING MACHINE
USER MANUAL

CONTENTS

01 CUSTOMER SERVICE

02 PRODUCT OVERVIEW

03 SAFETY INSTRUCTIONS

04 WARM-UP

05 PRE-USE INSTRUCTIONS

06 ASSEMBLE AND INSTALL

17 STORAGE AND MOVING TIPS

19 HOW TO USE THE ROWING MACHINE

20 INSTRUCTIONS FOR THE MONITOR

21 FAQ & SOLUTIONS

22 MAINTENANCE AND WARRANTY

23 FCC WARNING STATEMENT

CUSTOMER SERVICE

Thank You for Your Purchase!

If you encounter any issues such as damaged or defective products, need replacement parts, or require any other support, please contact our customer service team using the following methods:

- **Email: support@ypoofitness.com**
- **Response Time: 12-24 Hours**
- **Hotline: 1-844-977-0007**

For the fastest assistance, especially during peak hours, please reach out via email with your Order ID and a description of the issue (including photos or videos if possible).

Important:
Do not return the product without first contacting our customer service.

PRODUCT OVERVIEW

Product Model: V1 Lora (RM930)

Dimensions: 65× 23.6 × 17.7 inches

Machine Weight: 38.8 lbs

Maximum User Weight: 350 lbs

Tension Levels: 16

Resistance Mechanism: Magnetic

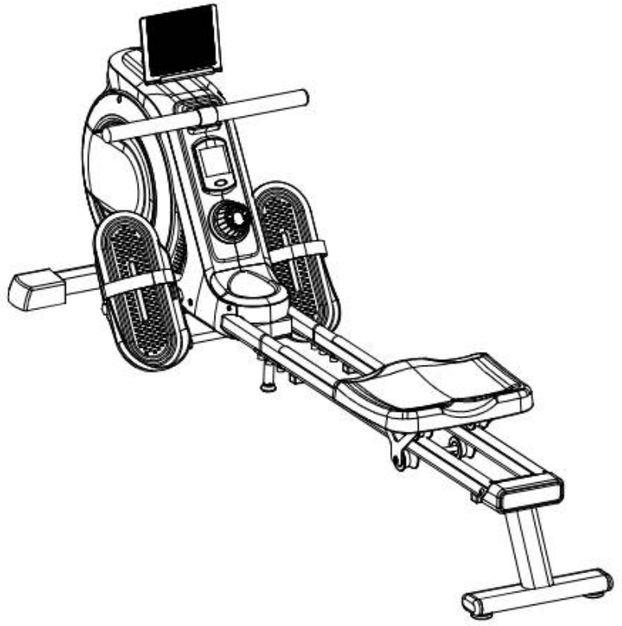

ROWING MACHINE USER MANUAL

SAFETY INSTRUCTIONS

Read the manual before using or assembling the equipment. Correct use ensures safety and effectiveness.

1、Consult a doctor if you have any health concerns before use.

2、Stop immediately and consult a doctor if you feel unwell during use (e.g., dizziness, chest pain).

3、For adults only: Children should stay away from the equipment. Supervise those with impaired abilities.

4、Place on a flat, firm surface with floor protection. Keep at least 1 meter of space around it and 2000*1000mm behind it.

5、Check bolts and nuts before each use.

6、Maintain the equipment regularly for safety.

7、Stop using if defective parts are found and resolve the issues.

8、Wear suitable clothing—avoid loose clothing.

9、For home use only: Max user weight is 350 lbs, height up to 6'3".

10、Children must not clean or maintain the equipment alone.

11、This equipment is not for medical use. It is a non-speed training device classified as HC (Home Use).

12、Do not exceed 45 cycles per minute for safety.

WARM-UP

Stretching Before Using the Rowing Machine

This routine helps improve flexibility and relieve muscle tension. Remember to perform each stretch gently, avoiding any bouncing or overstretching.



1. Downward Stretch

Slightly bend your knees and slowly stretch your body downward, relaxing your back and shoulders. Reach for your toes with your hands. Hold for 10-15 seconds, then rest for a few seconds. Repeat 3 times.



2. Hamstring Stretch

Sit on a mat with one leg extended straight and the other leg bent inward, placing the foot against the inner side of the straight leg. Reach forward with the same-side hand to touch the toes of your extended leg. Hold for 10-15 seconds, then rest for a few seconds. Repeat 3 times on each side.



3. Calf & Achilles Tendon Stretch

Stand with one foot behind the other and press both hands against a wall for support. Keep your back leg straight, with both heels firmly planted on the ground, and lean slightly forward. Hold for 10-15 seconds, then rest. Repeat 3 times for each leg.



4. Quadriceps Stretch

Stand steady, balancing with one hand on the wall. With the other hand, grab your ankle and pull it gently toward your hip to stretch the front of your thigh. Hold for 10-15 seconds, then rest. Repeat on the other side.



5. Inner Thigh Stretch

Sit on the floor with the soles of your feet together, allowing your knees to fall outward. Grasp your feet with your hands and gently pull them toward your groin. Hold for 10-15 seconds, then rest. Repeat 3 times.

PRE-USE INSTRUCTIONS

Thank you for choosing the YPOO RM930 Rowing Machine. Rowing is a low-impact, full-body workout that engages the legs, core, back, and arms, helping to improve cardiovascular health, core strength, and overall coordination. It also enhances running posture and efficiency while reducing the risk of injury.

Please be sure to read this manual before use. If you have any questions, feel free to contact us or watch the installation video for guidance

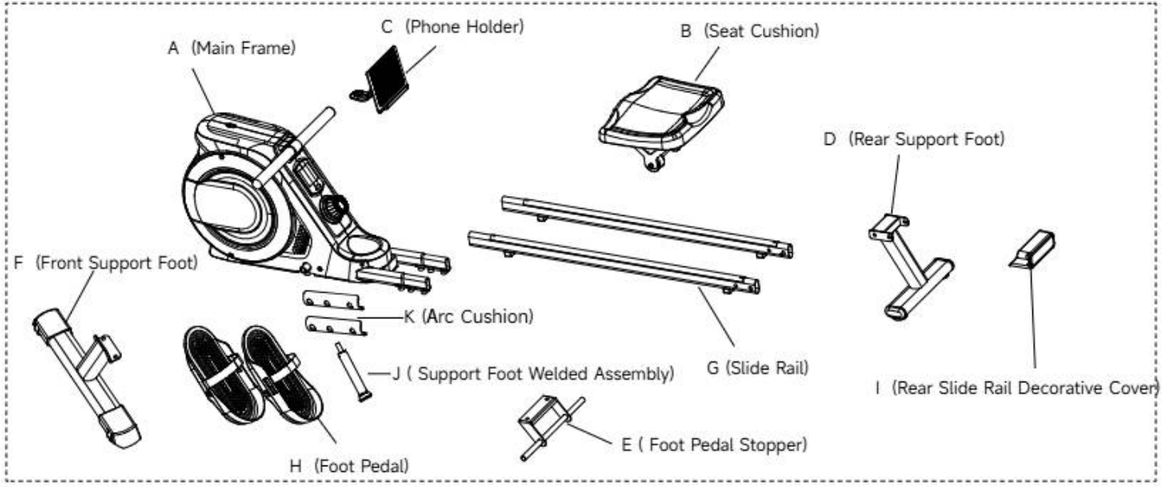

ASSEMBLE AND INSTALL

STEP 1: Install the Front Support Foot

1.Locate Part **Main Frame (A)** and **Front Support Foot (F)** from the package.

2.Use the **T-wrench (1)** to remove the pre-assembled cylindrical head screws on the main frame.

3.Reattach the **Front Support Foot (F)** using the removed screws.

Tool Needed:

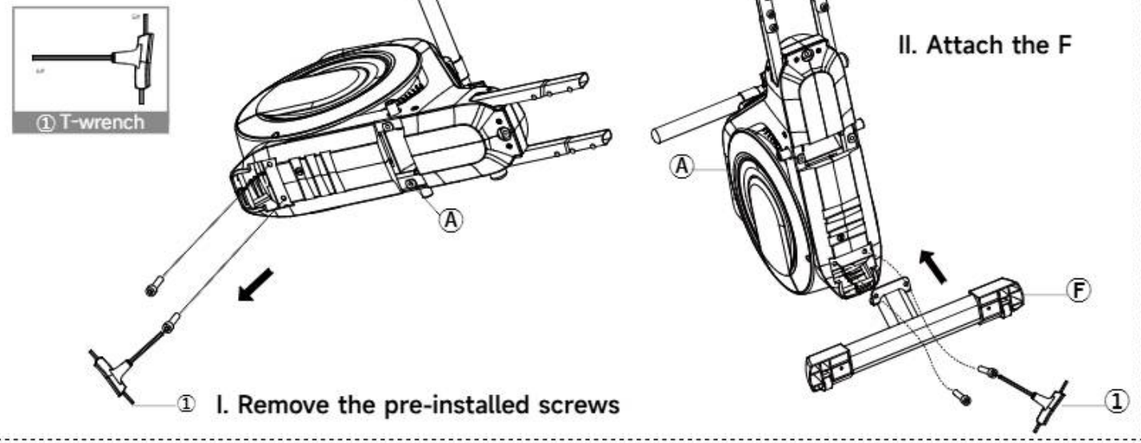

ASSEMBLE AND INSTALL

STEP 2: Install the Foot Pedal Stopper

1.Take out the parts installed in Step 1 and **Foot Pedal Stopper (E).**

2.Use the **T-wrench(1)** to remove the pre-installed screws.

3.Secure the **Foot Pedal Stopper (E)** back onto the main frame using the removed screws.

Tool Needed:

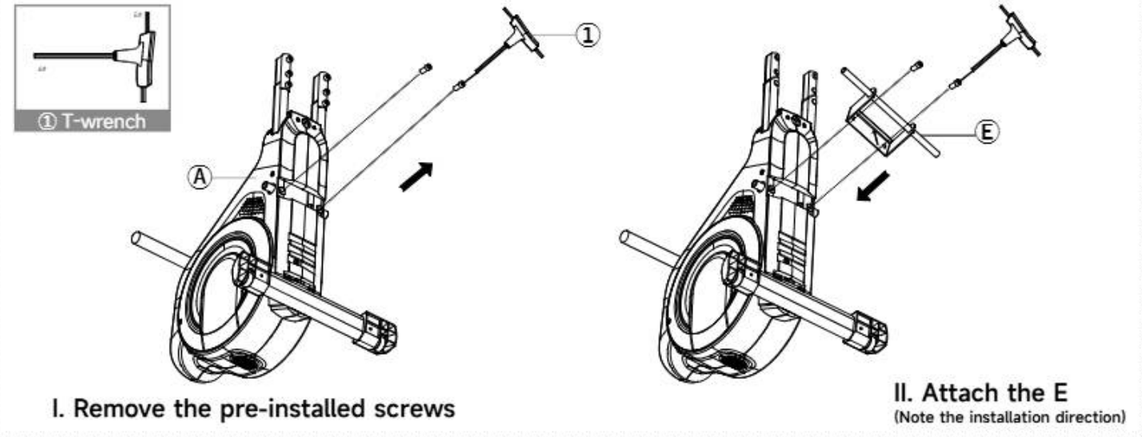

ASSEMBLE AND INSTALL

STEP 3: Remove Pre-installed Slide Rail Screws & Bumper Blocks

1.Use a **Phillips Screwdriver(3)** to remove the pre-locked bumper blocks.

2.Remove the Phillips screws on the **Slide Rail(G).**

Note: Please save the removed bumper blocks and Phillips screws, as they will be used in Step 7

Tool Needed:



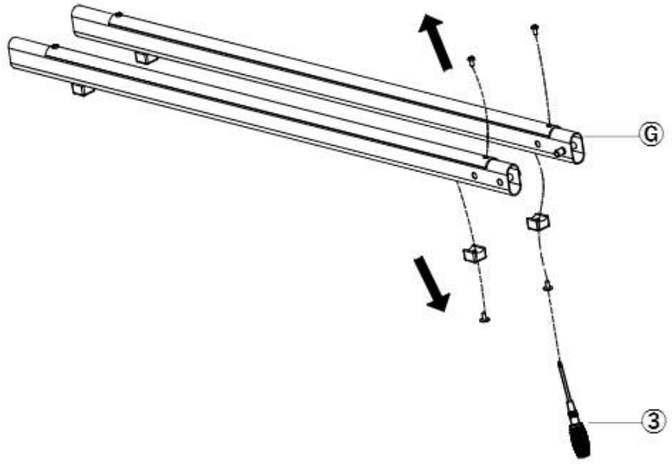

ASSEMBLE AND INSTALL

STEP 4: Install the Slide Rail

1.Insert the **Slide Rail (G)** into the designated slot in the **Main Frame (A).** (See the arrow for direction I)

2.Locate the **Arc Cushion (K)** and **M8×20*6(e)** in the pack.

3.Use the **T-wrench (1)** to fully tighten the screws. (See the arrow for direction II)

Tool Needed:

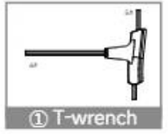

Parts Needed:



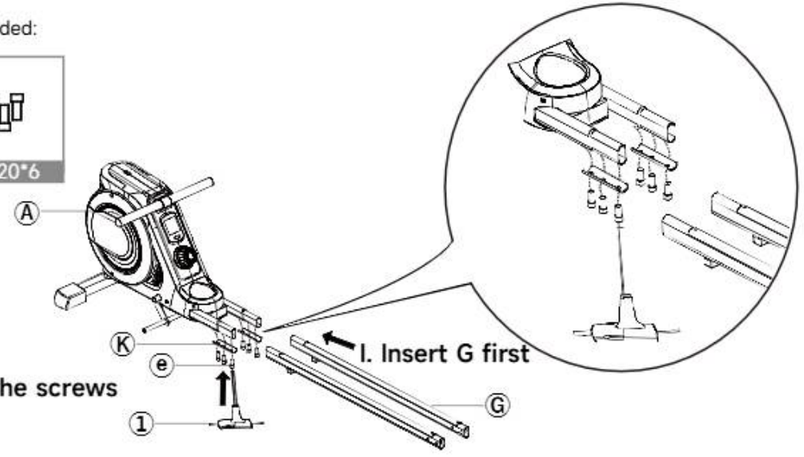

ASSEMBLE AND INSTALL

STEP 5: Install the Seat Cushion

1.Slide the **Seat Cushion (B)** onto the **Slide Rail (G).**

Not Require Tools

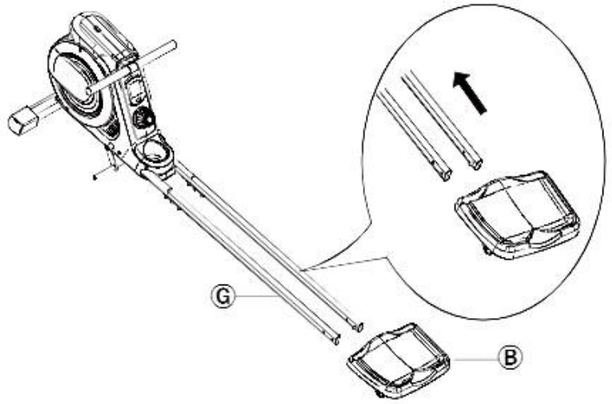

ASSEMBLE AND INSTALL

STEP 6: Install the Rear Support Foot

1.Insert the **Rear Support Foot (D)** into the mounting holes inside the **Slide Rail (G).**

2.Take out **M8*2(c)** locknuts from the parts tray and loosely secure them.

3.Take out the **M8×30*2(d)** bolt, tighten it with the **T-wrench(1),** then use the **13-15 Open Wrench (5)** to fully tighten the **M8*2 (c)** locknuts from **Step 2.**

4.Install the Slide Rail **Decorative Cover (I)**

Tool Needed:

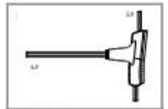



Parts Needed:

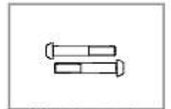

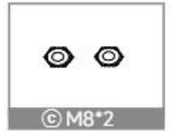

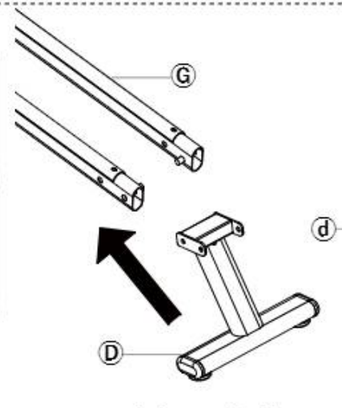

I. Insert D first

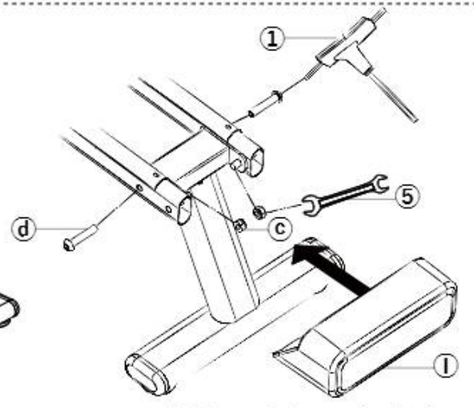

II. Then tighten the bolts

ASSEMBLE AND INSTALL

STEP 7: Reinstall the Bumper Blocks and Slide Rail Screws

1.Locate the bumper blocks and slide rail screws that were removed in Step 3.

2.Use the **Phillips Screwdriver (3)** to reattach the bumper blocks and slide rail screws to their original positions.

3.Ensure the bumper blocks and slide rail screws are securely locked in place.

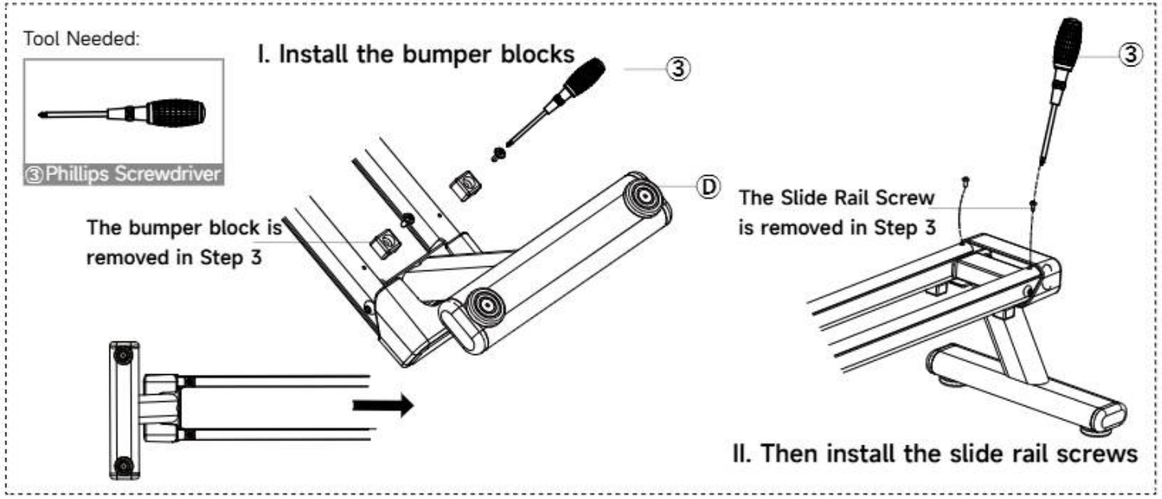

ASSEMBLE AND INSTALL

STEP 8: Install the Foot Pedals

1.Locate the **M12×150*2(a)** screws from the parts tray.

2.Insert the screws through the **Foot Pedals (H)**, ensuring that the left and right pedals are correctly identified.

3.Use a **17-19 Open Wrench(4)** to tighten the **screws clockwise,** securing the pedals in place.

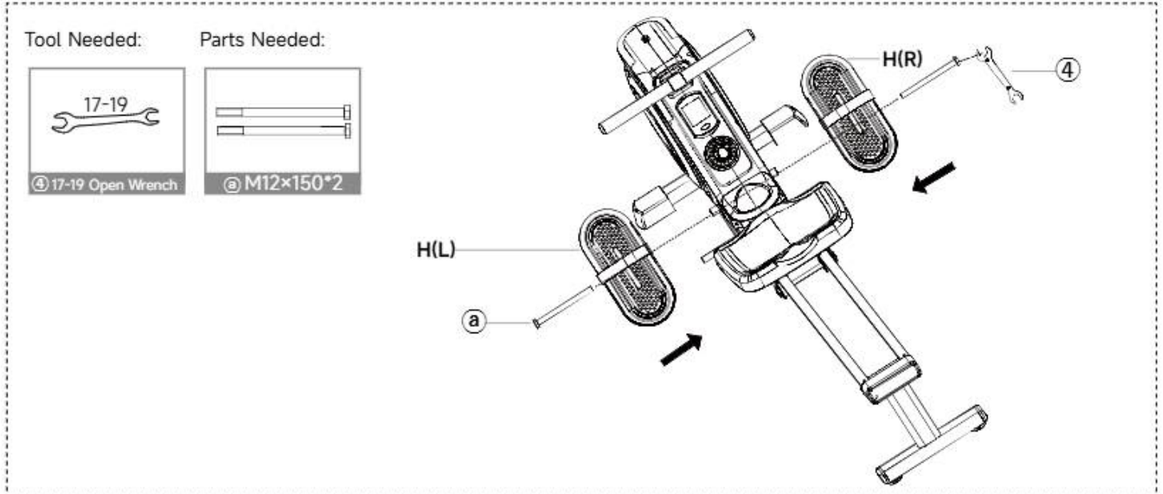

ASSEMBLE AND INSTALL

STEP 9: Install the Phone Holder (C)

1.Locate the **M4×10*2 (b)** from the parts tray.

2.Use the **L-shaped Wrench 3# (2)** to tighten the screws clockwise, securing the **Phone Holder (C)** in place.

Tool Needed:

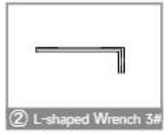

Parts Needed:

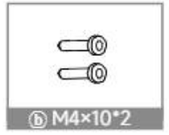

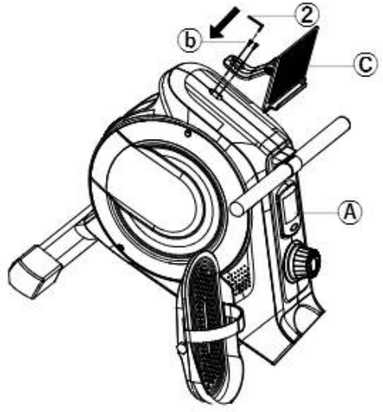

ASSEMBLE AND INSTALL

STEP 10: Install the Support Foot Assembly (J)

1.Locate the **Support Foot Assembly (J).**

2.Use your hands to screw it in place, tightening it **clockwise.**

Not Require Tools

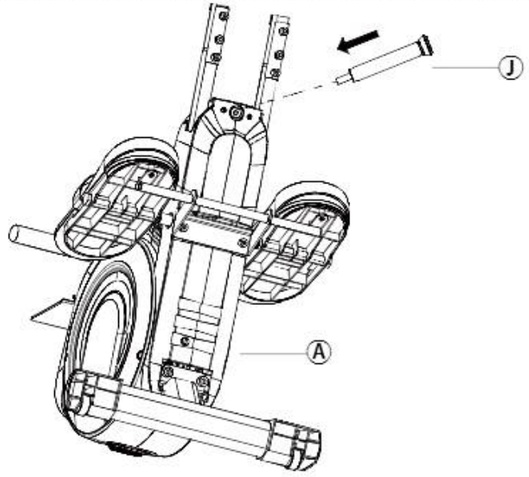

ASSEMBLE AND INSTALL

STEP 11: Install the Batteries

1.Take out the Data Display and locate the battery cover.

2.Install two batteries with the correct orientation, then gently replace the battery cover, ensuring it is securely in place.

Not Require Tools

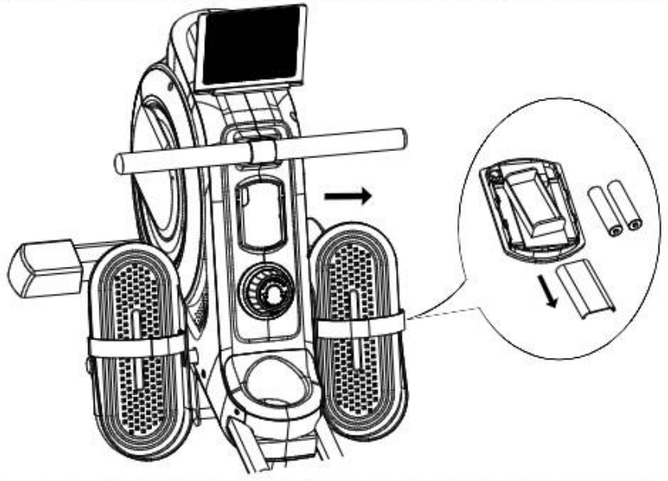

STORAGE AND MOVING TIPS

1、To move the rowing machine, bend your knees and lower your body. Lift the rear bottom pipe until the wheels are free. After moving, carefully place the pipe back to the ground.

2、Always lift the rowing machine with both hands. If necessary, ask for help from another person.

❶

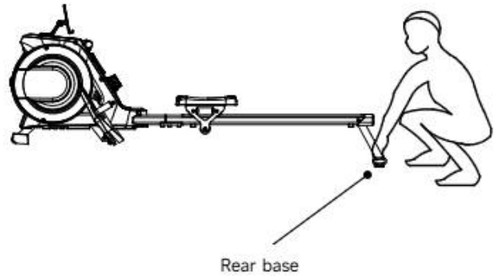

❷

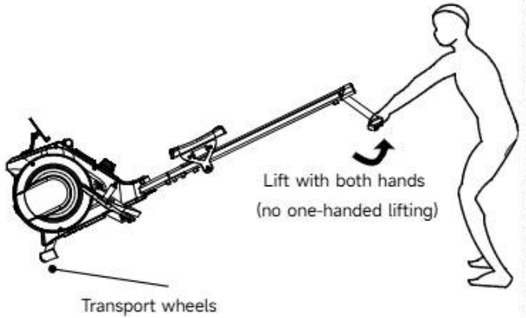

STORAGE AND MOVING TIPS

For efficient storage, position the rowing machine upright on a level, stable surface and lean it against a wall to minimize floor space usage.

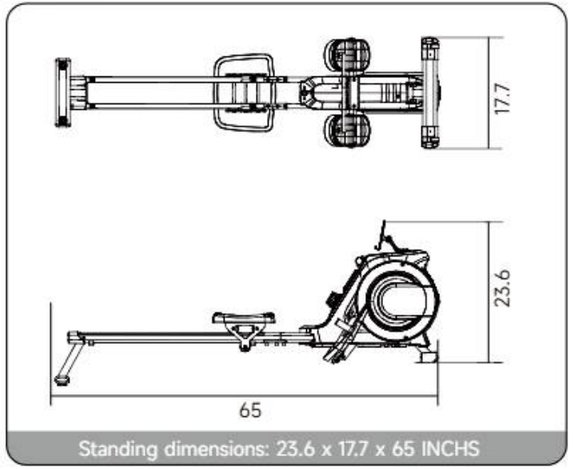

Standing dimensions: 23.6 x 17.7 x 65 INCHS

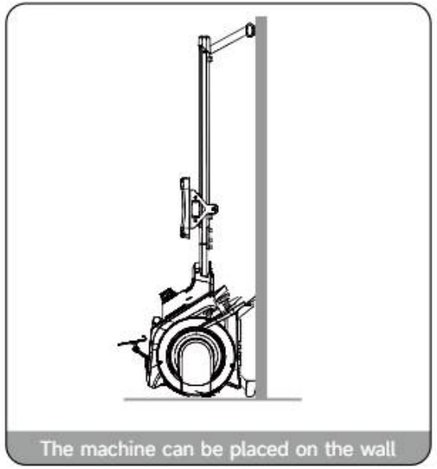

The machine can be placed on the wall

Caution

Keep the rowing machine out of children's reach to prevent accidents and injury.
Handle with care when moving or storing to avoid damage or injury.

HOW TO USE THE ROWING MACHINE

1. Secure Your Feet

- Sit on the seat and place your feet in the footrests.
- Adjust the straps to secure your feet comfortably.

2. Proper Grip

- Hold the handle with both hands, palms facing down.
- Keep your wrists straight to avoid strain.

3. Rowing Motion: Prepare→Drive→Finish→Recover

Prepare:

- Knees should be slightly bent.
- Slide forward until your knees are near your chest.
- Keep your shins vertical and the handle aligned with your belly button.

Drive:

- Push with your legs, shifting weight to your hips.
- Use your back and abs to slide the seat back.
- Maintain a straight back.

Finish:

- Fully extend your legs.
- Pull the handle to your chest using your back and biceps.
- Keep the handle aligned with your belly button.

Recover:

- Extend your arms, using leg power to return the seat to the start.
- Keep knees bent and body slightly forward.
- Keep your knees slightly bent and your body slightly forward.

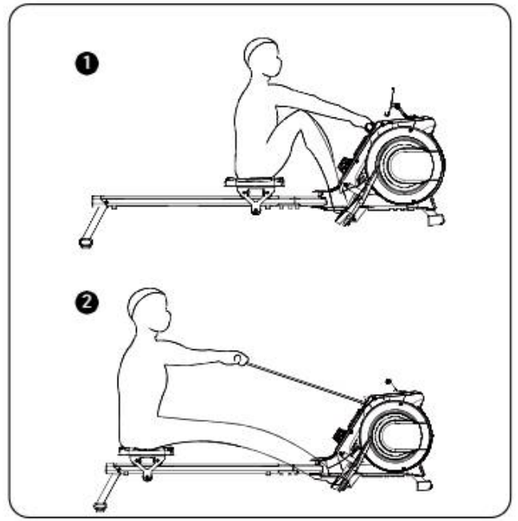

Note

- Maintain normal breathing while rowing, and avoid holding your breath.
- Keep your back straight and avoid slouching or excessive bending.
- When pushing with your legs, keep your knees shoulder-width apart and avoid them bending inward.

INSTRUCTIONS FOR THE MONITOR

Button Instructions

·Setting Button:

1.Select Function: Press to choose the desired display.

2.Reset Data: Hold for 3 seconds to reset all data.

Display Functions

·**TIME (0:00-99:59):** Press to show workout time.

·**COUNT (0-9999):** Displays stroke count.

·**CAL (0.0-999.9):** Displays calories burned.

·**SPM (0-999):** Displays strokes per minute.

·**DIST (0.0-999.9):** Displays distance rowed.

APP (YPOOFIT/Kinomap): Connects via Bluetooth.

Resistance Levels (1-16)

·**Levels 1-8:** Light resistance (warm-up or beginners).

·**Levels 9-12:** Moderate resistance (steady workouts).

·**Levels 13-16:** High resistance (intense training and muscle).

Notes

·**Auto Sleep:** No movement for 4 minutes will trigger sleep.

·**Replace Battery:** If the screen dims, replace the batteries.

·**Battery Info:** Uses two AAA batteries.

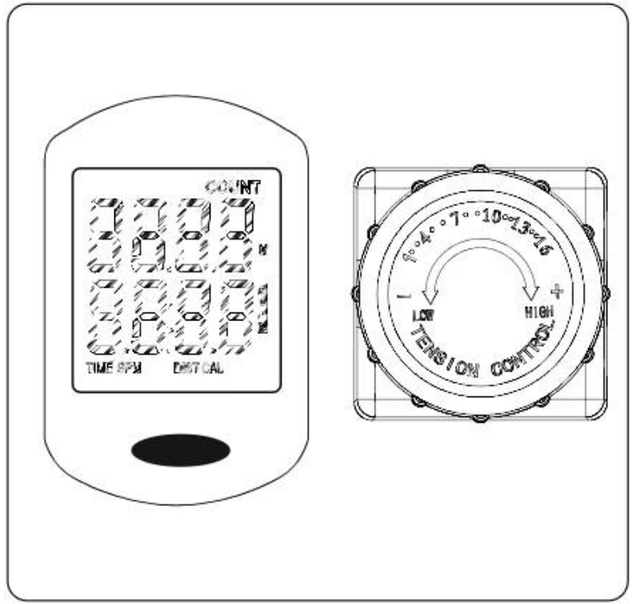

FAQ & SOLUTIONS

How to Improve Exercise Effectiveness

Just like muscle training, aerobic exercise requires increased blood flow and a higher heart rate, which enhances cardiovascular function. Heart rate is typically measured by your pulse. Exercise is most effective and safe when your heart rate remains within the target zone, which is between 87% and 72% of your maximum heart rate. The training goal should be gradually increased through a structured workout plan, with at least 3-4 sessions per week, each lasting 15-20 minutes.

Warning: Avoid exceeding your target heart rate. Progress gradually. If you have any medical conditions, please consult a doctor before starting. For individuals over 35-40 years old who are not regularly trained, we recommend following your doctor's advice. Always allow time for a proper warm-up and cool-down (see diagram B).

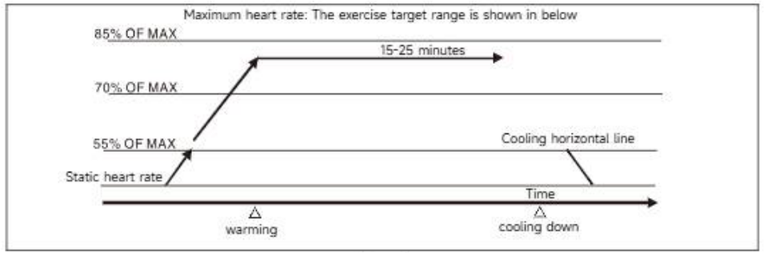

Figure B

Troubleshooting Guide

Issue	Cause	Solution
Uneven Frame	Uneven floor or debris	a.Remove debris b.Loosen frame bolts,level base,then tighten bolts
	Frame not leveled during assembly	c.Adjust the eccentric foot cover
Unstable Handle	Loose threads	Tighten the bolts
Unusual Noise from Moving Parts	Misalignment or loose gaps	Open the cover and adjust
Weak Movement	Increased resistance gap	a.Open the cover to adjust
	Faulty micro-adjuster	b.Replace damaged parts

MAINTENANCE AND WARRANTY

Maintenance Guidelines

1. Regular Inspections

Ensure all bolts, nuts, and adjustment knobs are securely tightened. Check that moving parts function smoothly and that no components are worn or damaged. Proper maintenance ensures the equipment remains safe to use.

2. Damaged Components

If any parts are worn or damaged, discontinue use immediately and replace them or contact a repair center. The equipment should only be used after necessary repairs.

3. Cleaning

Keep the equipment clean. Do not use acidic, alkaline, or organic solvents for cleaning.

Manufacturer's Limited Warranty

- Structural Frame: 1 year (For home use only)
- All Other Components: 90 days (For home use only)

Exclusions from Warranty Coverage:

YPOO FITNESS warrants to the original purchaser that this product is free from defects in material and workmanship when used as intended, provided it has been installed and operated according to the owner's manual. However, this warranty does not cover the following:

1. Improper installation and/or failure to follow the installation guidelines;
2. Use of the product beyond normal home use, or in applications for which it was not designed;
3. Cosmetic damage such as scratches, dents, or discoloration;
4. Damage caused by normal wear and tear, vandalism, accidents, or animals;
5. Any act of nature (such as fire, flooding, snow, ice, hurricanes, earthquakes, lightning, or other natural disasters), environmental conditions (such as air pollution, mold, mildew, etc.), or staining from foreign substances (such as dirt, grease, oil, etc.).

FCC WARNING STATEMENT

Changes or modifications not expressly approved by the party responsible for compliance could void the user's authority to operate the equipment. This equipment has been tested and found to comply with the limits for a Class B digital device, pursuant to Part 15 of the FCC Rules. These limits are designed to provide reasonable protection against harmful interference in a residential installation. This equipment generates uses and can radiate radio frequency energy and, if not installed and used in accordance with the instructions, may cause harmful interference to radio communications.However, there is no guarantee that interference will not occur in a particular installation. If this equipment does cause harmful interference to radio or television reception , which can be determined by turning the equipment off and on, the user is encouraged to try to correct the interference by one or more of the following measures:

-- Reorient or relocate the receiving antenna.
-- Increase the separation between the equipment and receiver.
-- Connect the equipment into an outlet on a circuit different from that to which the receiver is connected.
-- Consult the dealer or an experienced radio/TV technician for help.

This device complies with part 15 of the FCC Rules. Operation is subject to the following two conditions: (1) This device may not cause harmful interference, and (2) this device must accept any interference received, including interference that may cause undesired operation.

YP Exposure Statement

To maintain compliance with FCC' s YP Exposure guidelines, This equipment should be installed and operated with minimum distance of 20 cm the radiator your body. This device and its antenna(s) must not be co-located or operation in conjunction with any other antenna or transmitter

Sport makes me different

Please read all instructions carefully before using this product. Retain this owner's manual for future reference.
The specifications of this product may vary from the photos and are subject to change without notice.

Email: support@ypoofitness.com
Hotline:1-844-977-0007