Parrot Uncle

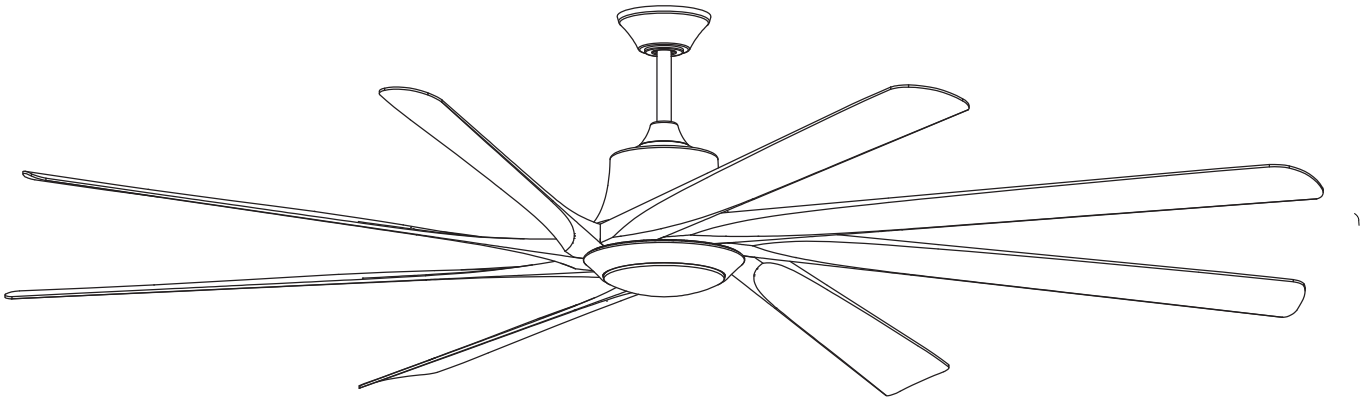

F8003

Parrot Uncle

F8003

Installation & Operating Instructions for the Parrotuncle Owner's Installation, Manual

WARNING: SHUT POWER OFF AT FUSE OR CIRCUIT BREAKER

Safety information

1. To reduce the risk of an electrical blow, electricity on the protective switch or the safety box went out before starting.
2. All wiring must correspond to the NASI/NFPA 70-1999 National Electric Code and local electrical regulations. The electrical installation must be carried out by a qualified and approved electrician.
3. The connection box and support construction must be assembled safely and 35 pounds (15.9 kilos) must be able to transport reliably. Use only output boxes listed with labeling.

   "Accepted for fans with a weight of £ 35 (15.9 kilos) or less."
4. The fan must be installed with a minimum distance of 2.1 m (7 feet) from the posterior edge of the wings to the floor.
5. Do not operate the reverse switch if the fan wings are moving. You have to turn off the fan and stop the wings before reverse the direction of the wing.
6. Do not place objects on the road to wings.
7. To avoid lesions or damage to the fan and other objects, be careful if you work on the fan or clean it.
8. Electrical diagrams only serve as a reference. The lighting rates that are not delivered with the fan must be listed and marked with the valve model that will be installed for use. The switches must be general use switches UL. Take into account the instructions for the appropriate installation included in the lighting rates and the switches.
9. After the electrical connections have been made, the size staircase must be turned up and carefully push to the plug box. The cables must be distributed in such a way that the ground connected driver and the device head are next to the socket.

   All fixing screws must be verified before installation and, if necessary, followed.

WARNING: To reduce the risk of injury, knife supports (also known as flanges) cannot be folded during installation or after installation. Do not put any object on the path of wings.

WARNING: Remove rubber motor attacks at the bottom of the fan before mounting the wings or try the engine.

WARNING: To avoid the risk of a fire or an electrical blow, this fan should not be used with a semiconductor speed controller.

WARNING: To avoid a possible electric shock, turn off the current in the main security box before wiring. If you feel that you do not have enough knowledge or experience in electrical wiring, communicate with a license electrician.

WARNING: Electrical diagrams only serve as a reference. The optional use of an lighting rate must be on the list and marked with this fan for use.

WARNING: To reduce the risk of fires, electrical discharges or injuries, assemble the device in a socket that with the inscription accepted for fans with a weight of £ 35) or less. It is marked and use the screws supplied with the plug.

TECHNICAL INFORMATION

SKU	Nominal voltage	Nominal output (motor)	Light
F8003	120 V AC	75W	40W

Parrot Uncle

F8003

Installation & Operating Instructions for the Parrotuncle Owner's Installation, Manual

WARNING: SHUT POWER OFF AT FUSE OR CIRCUIT BREAKER

SAFETY TIPS.

WARNING: To reduce the risk of electrical shock, turn off the electricity to the fan at the main fuse box or circuit panel before you begin the fan installation or before servicing the fan or installing accessories.

1. **READ ALL INSTRUCTIONS AND SAFETY INFORMATION CAREFULLY BEFORE INSTALLING YOUR FAN AND SAVE THESE INSTRUCTIONS.**

CAUTION: To avoid personal injury, the use of gloves may be necessary while handling fan parts with sharp edges.

2. Make sure all electrical connections comply with Local Codes or Ordinances, the National Electrical Code, and ANSI/NFPA 70-1999. If you are unfamiliar with electrical wiring or if the house/building wires are different colors than those referred to in the instructions, please use a qualified electrician.
3. Make sure you have a location selected for your fan that allows clear space for the blades to rotate, and at least ten (10) feet (3.05 meters) of clearance between the floor and the fan blade tips. The fan should be mounted so that the tips of the blades are at least thirty (30) inches (76 centimeters) from walls or other upright structures.
4. The outlet box and ceiling support joist used must be securely mounted, and capable of supporting at least 50 pounds (22.68 kilograms). The outlet box must be supported directly by the building structure. Use only CETL or CUL in Canada or ETL or UL in USA listed outlet boxes marked "FOR FAN SUPPORT."

WARNING: To reduce the risk of fire, electrical shock, or personal injury, mount to the outlet box marked "Acceptable for Fan Support of 22.68 kg (50 lb) or less," and use the mounting screws provided with the outlet box. Most outlet boxes commonly used for the support of lighting fixtures are not acceptable for fan support and may need to be replaced. Consult a qualified electrician if in doubt.

WARNING: To reduce the risk of fire, electrical shock, or personal injury, wire connectors provided with this fan are designed to accept only one 12 gauge house wire and two lead wires from the fan. If your house wire is larger than 12 gauge or there is more than one house wire to connect to the corresponding fan lead wires, consult an electrician for the proper size wire connectors to use.

5. Electrical diagrams are for reference only. Light kits that are not packed with the fan must be CETL or CUL in Canada or ETL or UL in USA listed and marked suitable for use with the model fan you are installing. Switches must be CETL or CUL in Canada or ETL or UL in USA general use switches. Refer to the instructions packaged with the light kits and switches for proper assembly.
6. After installation is complete, check that all connections are absolutely secure.
7. After making electrical connections, spliced conductors should be turned upward and pushed carefully up into the outlet box. The wires should be spread apart with the grounded conductor and the equipment-grounding conductor on opposite sides of the outlet box.

WARNING: To reduce the risk of fire or electrical shock, do not use this fan with any solid state speed control device or control fan speed with a full range dimmer switch. [Using a full range dimmer switch to control fan speed will cause a loud humming noise from fan.] (**Note:** This fan is suitable for use with remote control approved for DAMP locations.)

8. Do not operate the reverse switch until the fan has come to a complete stop. [**Note**: If using remote control with reverse capability, reverse fan blade direction only when on LOW speed.]

9. Do not insert anything between the fan blades while they are rotating.

WARNING: To reduce the risk of personal injury, do not bend the blade arms during assembly or after installation. Do not insert objects into the path of the blades.

WARNING: To avoid personal injury or damage to the fan and other items, be cautious when working around or cleaning the fan.

10. Do not use water or detergents when cleaning the fan or fan blades. A dry dust cloth or lightly dampened cloth will be suitable for most cleaning.

WARNING: To reduce the risk of personal injury, use ***only*** parts provided with this fan. **The use of parts *OTHER* than those provided with this fan will void the warranty.**

WARNING: This fan MUST be installed with the safety cable provided with the fan. Failure to use the safety cable provided may result in personal injury, damage to the fan or damage to other property.

NOTE: The important safety precautions and instructions appearing in the manual are not meant to cover all possible conditions and situations that may occur. It must be understood that common sense and caution are necessary factors in the installation and operation of this fan.

F8003

Installation & Operating Instructions for the Parrotuncle Owner's Installation, Manual

WARNING: SHUT POWER OFF AT FUSE OR CIRCUIT BREAKER

1. Unpacking Your Fan.

Carefully open the packaging. Remove items from Styrofoam inserts. Remove motor housing and place on carpet or Styrofoam to avoid damage to finish. Do not discard fan carton or Styrofoam inserts should this fan need to be returned for repairs.
Check against parts inventory that all parts have been included.

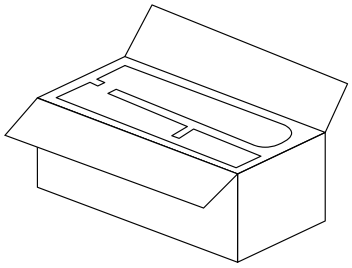

2. Parts Inventory.

1 Hanging Bracket

2 Ceiling Canopy

3 Trim Ring

4 Hanger Ball/Downrod

5 Assembly Yoke Cover

6 Fan Housing with Motor
*Remove rubber shipping supports around motor, if applicable. Save the screws.

7 Blade Set of 8

8 Hand-held Remote/Receiver

9 Lampboard

10 Lampshade

11 extension power cord 18" X 1

extension power cord 24" X 2

12 Hardware Bag

Blade to Motor Screws
(Flat round head scross toothed half-threaded 1/4 x 18 screw)

Blade Supports (8)

Blance sticker, blance clamp

Bracket Mounting Hardware (wood screws, screws, lock washers, star washers, flat washers, wiring cap)

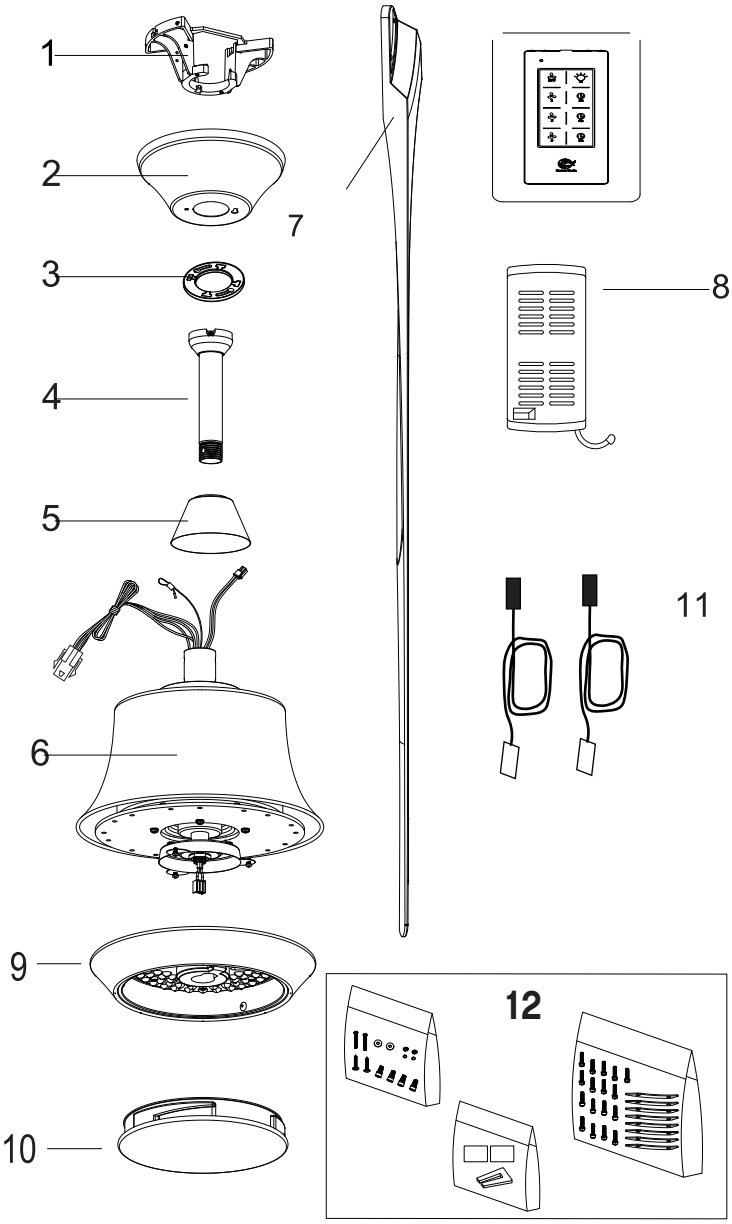

IMPORTANT REMINDER: You must use the parts provided with this fan for proper installation and safety.

F8003

Installation & Operating Instructions for the Parrotuncle Owner's Installation, Manual

WARNING: SHUT POWER OFF AT FUSE OR CIRCUIT BREAKER

3. Installation Preparation.

To prevent personal injury and damage, ensure that the hanging location allows the blades a clearance of 10 feet (3.05m) from the floor and 30in. (76cm) from any wall or obstruction.
This fan is suitable for room sizes up to 400 square feet (37.2 square meters).

This fan can be mounted with a **downrod** on a regular (no slope) ceiling **only**. The hanging length can be extended by purchasing a longer downrod (0.5in./1.27cm diameter). Fan CANNOT be mounted as a flushmount NOR on a vaulted ceiling.

Installation requires these tools:
Phillips screwdriver, flathead screwdriver, adjustable pliers or wrench, stepladder, wire cutters, and rated electrical tape

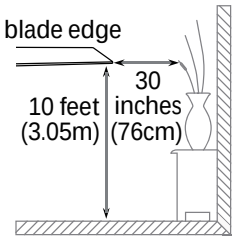

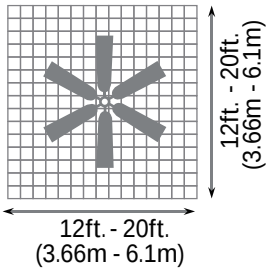

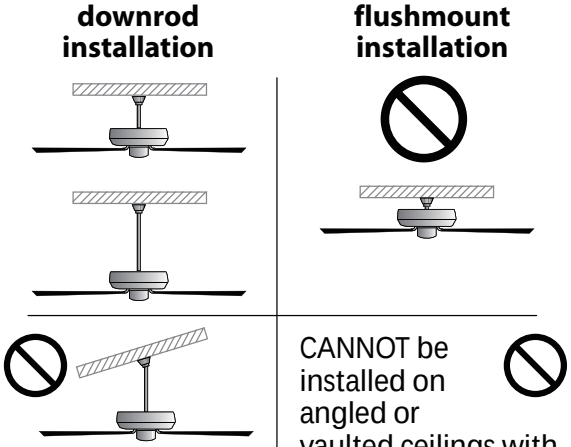

4. Hanging Bracket Installation.

Turn off circuit breakers to current fixture from breaker panel and be sure operating light switch is turned to the OFF position. ***WARNING**: Failure to disconnect power supply prior to installation may result in serious injury.*

Remove existing fixture.
***WARNING**: To reduce the risk of fire, electric shock, or personal injury, mount to outlet box marked "Acceptable for Fan Support of 22.68 kg (50lbs.) or Less" and use mounting screws provided with the outlet box. Most outlet boxes commonly used for the support of lighting fixtures are not acceptable for fan support and may need to be replaced. Consult a qualified electrician if in doubt. When using an existing outlet box, be sure the outlet box is securely attached to the building structure and can support the full weight of the fan. Ensure it is clearly marked "Suitable for Fan Support." If not, it must be replaced with an approved outlet box. Failure to do so can result in serious injury.*

***CAUTION**: Be sure outlet box is grounded and that a ground wire **GREEN** or bare) is present.*

Install hanging bracket to outlet box using original screws, spring washers and flat washers provided with new or original outlet box.* If installing on a vaulted ceiling, face opening of hanging bracket towards high point of ceiling. Arrange electrical wiring around the back of the hanging bracket and away from the bracket opening.

***Note**: It is very important that you use the proper hardware when installing the hanging bracket as this will support the fan.*

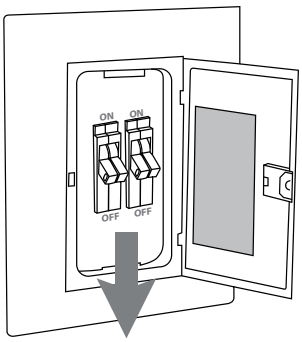

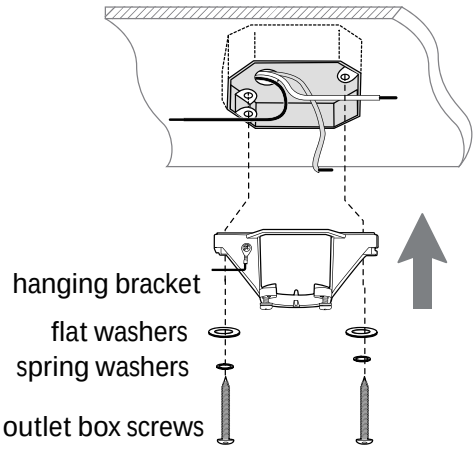

Parrot Uncle

F8003

Installation & Operating Instructions for the Parrotuncle Owner's Installation, Manual

WARNING: SHUT POWER OFF AT FUSE OR CIRCUIT BREAKER

5. PREPARATION

PREPARATION:

Verify you have all the parts before beginning the installation. Check foam insert closely for missing parts. Remove the motor from packing. To avoid damage to finish, assemble motor on soft padded surface or use the original foam inset in motor box.

DO NOT LAY MOTOR HOUSING ON ITS SIDE AS THIS COULD RESULT IN SHIFTING OF MOTOR IN DECORATIVE ENCLOSURE.

NOTE: The illustration show includes Optional Light Kit.

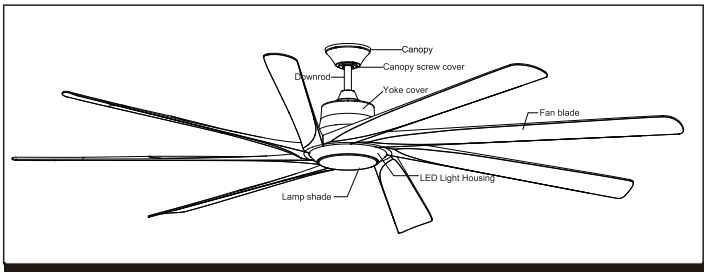

Parts identification on assembled fan.

6. INSTALLING THE HANGING BRACKET

CAUTION: To avoid possible electrical shock, be sure electricity is turned off at the main power box before wiring. All wiring must be in accordance with National and Local Electrical Codes and the ceiling fan must be grounded as a precaution against possible electric shock.

Locate ceiling joist where the fan is to be mounted, being sure location agrees with the requirements in the minimum clearance section of this guide. Wood joists must be sound and of adequate size to support 35 pounds (See page 2, items 3 and 4).

If not already present, mount a UL listed outlet box marked "suitable for fan support" following the instructions provided with the outlet box. The outlet box must be able to support a minimum of 35 pounds.

Remove canopy from hanger bracket. Remove twist-lock trim ring by rotating counterclockwise. Remove canopy screw that does not have key slot in canopy. Loosen screw with key slot and remove canopy.

Attach hanging bracket to outlet box using screws provided with the outlet box.

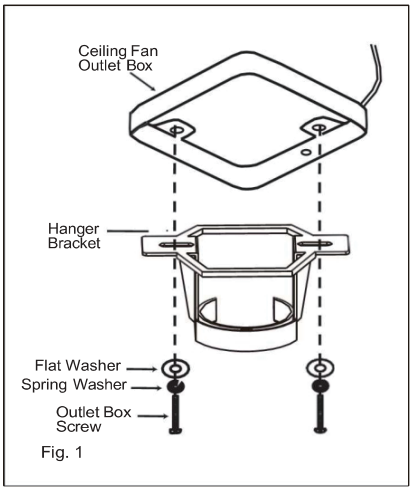

Fig. 1

7. HANGING THE FAN

Remove ball from downrod by loosening set screw in the side of the ball. Slide the ball down and remove ball pin; remove ball. (Fig. 1)

Carefully support fan body (motor) in its styrofoam packing with the mounting collar (where the wires come out) facing
upward.

Loosen the two security set screws and remove the downrod pin and retaining clip from the coupling on top of the motor assembly. (Fig. 2)

Carefully feed the electrical lead wires and safety cable from the fan through the downrod. Thread downrod into coupler until holes align. Insert downrod pin through holes in mounting collar and downrod; clip cotter pin through small hole in end of downrod pin to hold downrod in place.

Tighten security set screws against downrod using a large flat blade screwdriver to ensure a tight fit against downrod. Tighten nuts against mounting collar.

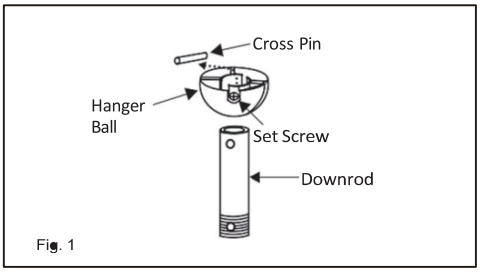

Fig. 1

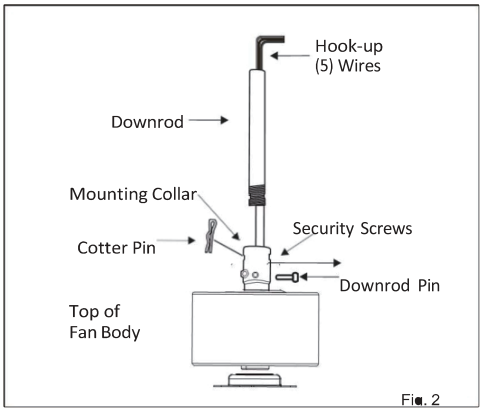

Fig. 2

Parrot Uncle

F8003

Installation & Operating Instructions for the
Parrotuncle Owner's Installation, Manual

WARNING: SHUT POWER OFF AT FUSE OR CIRCUIT BREAKER

8. ELECTRICAL CONNECTIONS

NOTE: One fan per power circuit.

REMEMBER - Turn off the power! NOTE Control must be installed with in 30 feet of fan

WARNINGS: Check to see that all connections are tight , including ground, and that no bare wire is visible at the wire nuts, except for the ground wire.

CAUTION: to reduce the risk of electric shock, this fan must be installed with an isolation wall control/swith

1. **Insert the receiver into the ceiling mounting bracket with the flat side of the receiver facing the ceiling, (Fig,1) For the best performance, make sure the Black antenna and WIFI Antena, on the end of receiver, remains extended an not tangled with any of the electrical wires,**

2. **Make wire connections from the fan to the receiver unit, For this step use the bundle of 5 wires on the receiver(Fig. 2)**

   Connect the YELLOW fan wire to the YELLOW receiver wire
   Connect the GRAY fan wire to the GRAY receiver wire
   Connect the RED fan wire to the RED receiver wire
   Connect the WHITE fan light kit wire to the WHITE receiver light kit wire
   Connect the RED fan light kit wire to the RED receiver light kit wire
   Connect the YELLOW fan light kit wire to the YELLOW receiver light kit wire

3 **Connect the wiring from the ceiling to the receiver unit (Use the 2 wire bundle on the reciver .) Secure with supplied wire nuts.**
Connect the BLACK building supply wire to the BLACK receiver wire.
Connect the WHITE building supply wire to the WHITE receiver wire.
Connect the COPPER building ground wire to the GREEN ground wire from the fan and receiver.

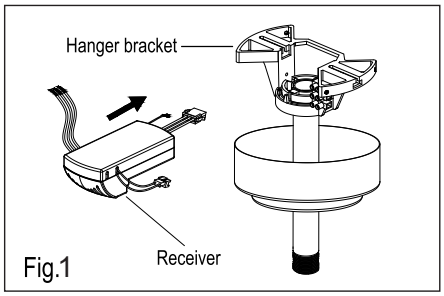

Fig.1

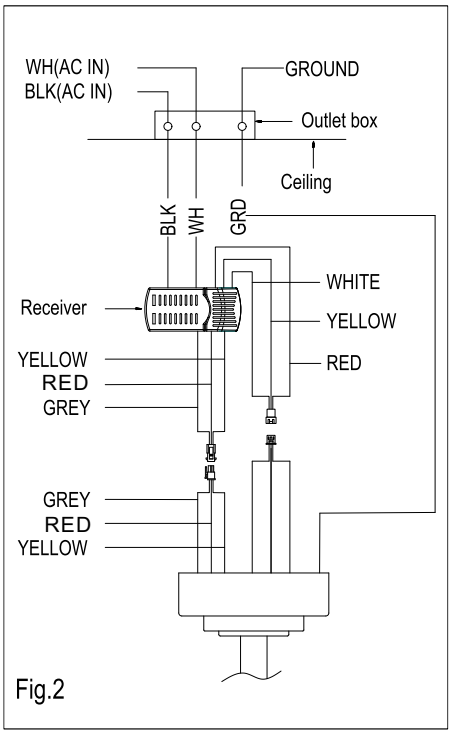

Fig.2

9. FINISHING THE INSTALLATION

Tuck connections neatly into ceiling outlet box.

Slide the canopy up to mounting bracket and allign the key hole on the canopy to the screw on the mounting bracket, turn canopy until it locks in place at the narrow section of the key holes.

Align the circular hole on canopy with the remaining hole on the mounting bracket, secure by tightening the
two set screws.

Assemble trim ring by aligning slots in trim ring with canopy screw heads.Twist to lock into place.

NOTE: Adjust the canopy screws as necessary until the canopy and trim ring are snug.

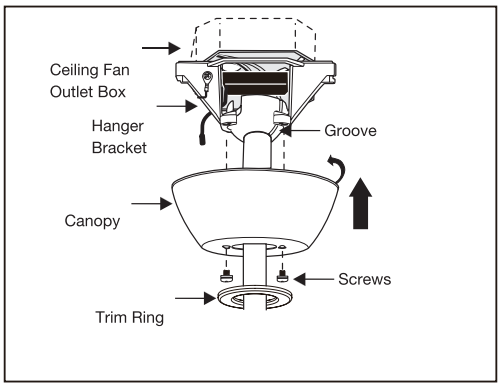

WARNING:

Make sure the hook on the hanging bracket properly sits in the groove in the hanger ball before attaching the canopy to the bracket by turning the housing until it drops into place.

Parrot Uncle

F8003

Installation & Operating Instructions for the
Parrotuncle Owner's Installation, Manual

WARNING: SHUT POWER OFF AT FUSE OR CIRCUIT BREAKER

10. BLADE ATTACHMENT

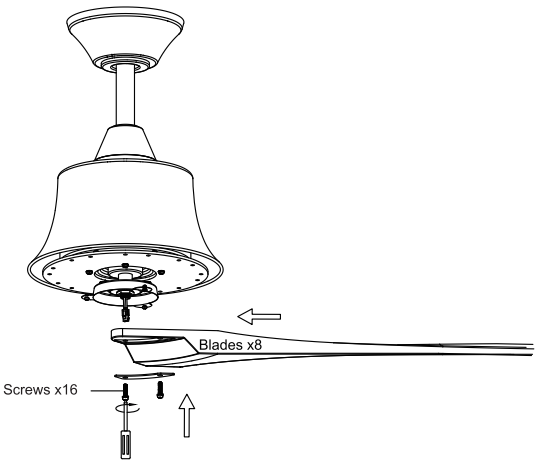

NOTE:

Remove any rubber supports that are installed for shipping.

Assemble the blades to the motor with the provided screws, lock washers and flat washers. Repeat procedure for all blades. Make sure screws are **TIGHT!** Loose motor screws can contribute to unnecessary wobble or fan noise.

NOTE:

Cordless power screwdrivers are **NOT** recommended as they usually strip the heads of the screws and usually will not fully compress the lock washers on the motor's screws.

Use a large flat blade screwdriver for final tightening to fully compress the washers. This will help ensure proper alignment of the blades and noise free, wobble free running.

11. INSTALLING THE CAP OR LED ASSEMBLY AND GLASS SHADE

Optional Light Kit

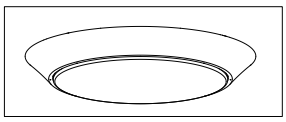

How to Assemble the Light Kit or Cap

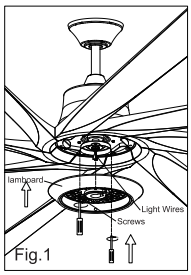

Fig.1

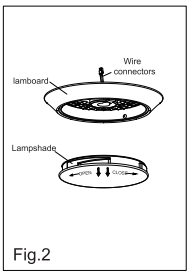

Fig.2

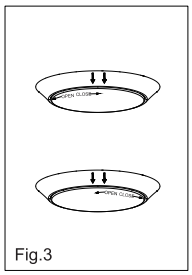
Fig.3

Connect the 2-wire plug from the fan to the 2-wire plug of the LED Assembly.

Make sure the connector snaps together.

Carefully tuck the wire connector and wires inside the mounting hub of the motor assembly. (Fig. 1)

Align all 4 holes in LED Assembly with the 4 holes of the Mounting Hub. Make sure all screws are **TIGHT!** (Fig. 1)

Raise the Glass Shade or Cap against the LED Assembly and turn clockwise until it is snug.

Make sure the index of glass is between the index of Light Kit (Fig. 2)

NOTE:

Be sure the power is off before installing

VERY IMPORTANT – DO NOT OVERTIGHTEN

Restore power and your Light Kit is ready for operation.

Parrot Uncle

F8003

Installation & Operating Instructions for the
Parrotuncle Owner's Installation, Manual

WARNING: SHUT POWER OFF AT FUSE OR CIRCUIT BREAKER

Wiring

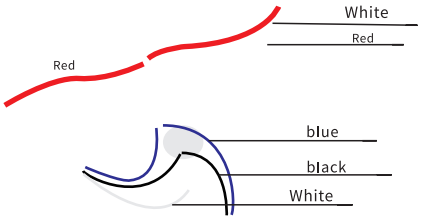

Explain

physical connection this
attachment shall prevail.

①

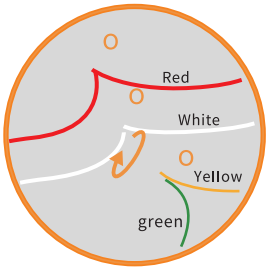

②

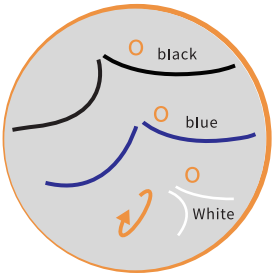

③

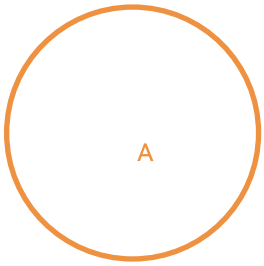

Make sure the antenna
is not squeezed.

Step 1:Wiring the receiver to the householdwiring

1. Spread the wires apart so that the red and whitewires are on one side of the outlet box and thewhite and black wires are on the other side.

2.Connect the green fan wires to the householdground wire(this may be a green or bare wire)using a wire connecting nut.

3.Connect the receiver red wire to the householdred (hot) wire using a wire connecting nut.

4.Connect the receiver white wire to the householdwhite wire (neutral)using a wire connecting nut.Secure eachwireconnectingthenutusingelectrical tape.

Step 2:Wiring the fan to the receiver

1. Connect the blue wire from the receiver to theblue wire (or possibly black with white stripe wire)from the fan.

2. Connect the black wire from the receiver to theblack wire from the fan.

3.Connect the white wire from the receiver to thwhite wire from the fan.

Step 3:Make sure the antenna is not squeezed.

F8003

Installation & Operating Instructions for the
Parrotuncle Owner's Installation, Manual

WARNING: SHUT POWER OFF AT FUSE OR CIRCUIT BREAKER

2. OPERATING TRANSMITTER:

Operating the buttons on the panel of the transmitter.

3 key -for fan high speed.

2 key-for fan medium speed.

1 key-for fan low speed.

OFF key-for fan off.

LIGHT key-for light on and off.

2hr , 4hr , 8hr button to set the FAN sleep timer

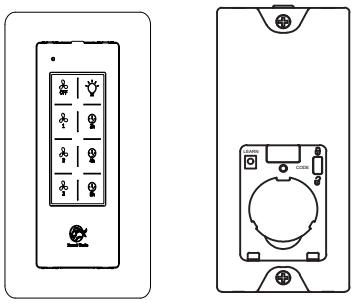

MODEL:GA030

OPERATION DISTANCE 20 FEET

YOUR REMOTE NOW HAS FULL CONTROL OF THE FAN AND LIGHT.

3.TROUBLE SHOOTING GUIDE

a.Power to receiver?

b.Receiver wired correctly?

c.Fan manual speed control in highest position?

d.Light kit switch turned on?

e.Good battery in the transmitter?

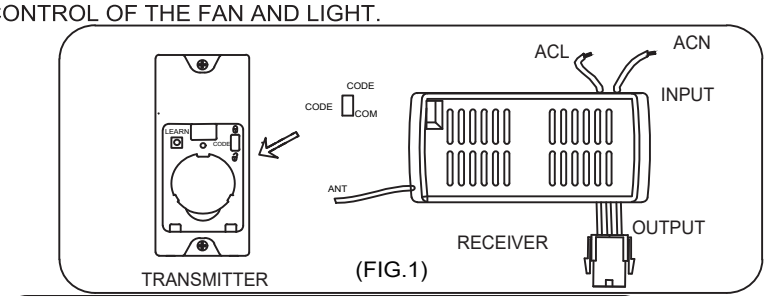

(FIG.1)

If there are two or more ceiling fans installed in the same house, in order to prevent your ceiling fans from being affected by the remote control of the adjacent ceiling fans, first turn the switch in each remote control transmitter to the CODE(UP) position (see the schematic diagram FIG1) Remarks: The standard state of the transmitter is in the down code COM.

(Power-off means you need to use a wall switch to shut down the power of the ceiling fan, if you do not have a wall switch, please power off the whole room from the air circuit-breaker for each room)

After installing the remote control receiver on the ceiling fan

1: Turn on the power of the 1# ceiling fan receiver (the power of the 2# receiver is kept in a power-off state), within 30 seconds after the fan power is turned on, press the LEARN button corresponding to the 1# transmitter, then The receiver will learn the transmitter code. When the transmitter code is learned successfully, the light of the ceiling fans will flash twice, and then it can be used normally.

2: Turn on the power of the 2# ceiling fan receiver (the power of the 1# receiver is kept in a power-off state), within 30 seconds after the fan power is turned on, press the LEARN button corresponding to the 2# transmitter, then The receiver will learn the transmitter code. When the transmitter code is learned successfully, the light of the ceiling fans will flash twice, and then it can be used normally.

And so on, only one ceiling fan is powered on each time the corresponding transmitter learns.

After the 1# and 2# remote control transmitters have been successfully learned, turn on the power of the two ceiling fans. At this time, the 1# transmitter and the 2# transmitter can be used separately for one ceiling fan.

FCC Statement:

This device complies with Part 15 of the FCC Rules. Operation is subject to the following two conditions.
This device may not cause harmful interference.
This device must accept any interference received, including interference that may cause undesired operation.
Changes or modifications not expressly approved by the party responsible for compliance could void the user's authority to operate the equipment.

NOTE: This equipment has been tested and found to comply with the limits for a Class B digital, pursuant to Part 15 or the FCC Rules. These limits are designed to provide reasonable protection against harmful interference in a residential installation. This equipment generates, uses and can radiate radio frequency energy and, if not installed and used in accordance with the instructions, may casue harmful interference to radio communications,

However, there is no guarantee that interference will not occur in a particular installation. If the equipment does cause harmful interference to radio or television reception, which can be determined by turning the equipment off and on, the user is encouraged to try to correct the interference by one or more of the following measures:

--- Reorient or relocate the receiving antenna.

--- Increase the separation between the equipment and receiver.

--- Connect the equipment into an outlet on a circuit different from that to which the receiver is connected.

--- Consult the dealer or an experienced radio/ TV technician for help.

WARNING:

Do NOT install this fan with variable speed wall control or wall-mounted dimmer switch. It will permanently damage the fan's remote control and cause the fan's function to fail.



NO Variable speed wall control



NO Dimmer switch

Parrot Uncle

F8003

Installation & Operating Instructions for the
Parrotuncle Owner's Installation, Manual

WARNING: SHUT POWER OFF AT FUSE OR CIRCUIT BREAKER

⚠ WARNING

- **INGESTION HAZARD**: This product contains a button cell or coin battery.
- **DEATH** or serious injury can occur if ingested.
- A swallowed button cell or coin battery can cause **Intemal Chemical Burns** in as little as 2 hours.
- **KEEP** new and used batteries **OUT OF REACH OF CHILDREN**
- **Seek immediate medical attention** if a battery is suspected to be swallowed or inserted inside any part of the body.



Remove and immediately recycle or dispose of used batteries according to local regulations and keep away from children. Do NOT dispose of batteries in household trash or incinerate.

Even used batteries may cause severe injury or death.

Call a local poison control center for treatment information.

Compatible battery type is CR2032,3V

Ensure the batteries are installed correctly with regard to polarity (+ and -).

Do not mix old and new batteries, different brands or types of batteries, such as alkaline, carbon-zinc, or rechargeable batteries

Non-rechargeable batteries are not to be recharged. Exhausted batteries are to be removed from the product.

Do not force discharge, recharge, disassemble, heat above (manufacturer's specified temperature rating) or incinerate. Doing so may result in injury due to venting,leakage or explosion resulting in chemical burns.

Remove and immediately recycle or dispose of batteries from equipment not used for an extended period of time according to local regulations.

Always completely secure the battery compartment. If the battery compartment does not close securely, stop using the product,remove the batteries, and keep them away from children.

⚠WARNING INGESTION HAZARD: This product contains a button cell or coin battery.

F8003

Installation & Operating Instructions for the
Parrotuncle Owner's Installation, Manual

WARNING: SHUT POWER OFF AT FUSE OR CIRCUIT BREAKER

Size of product

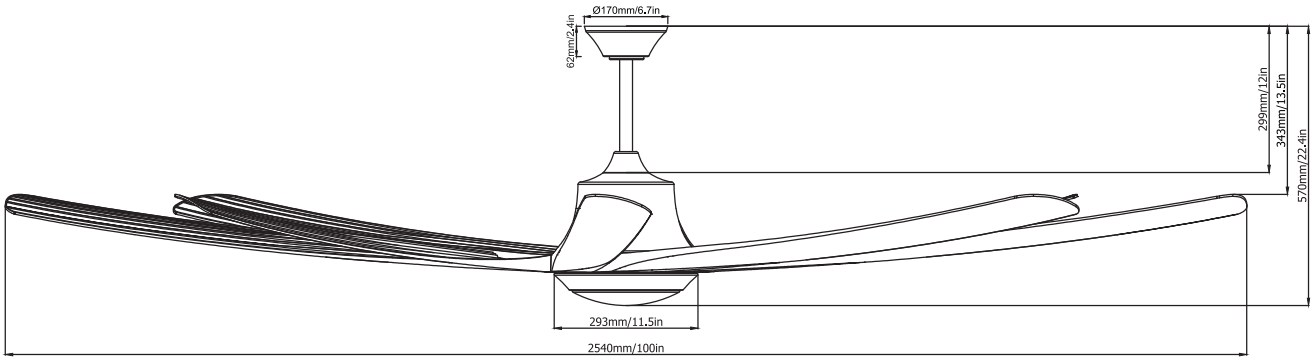

Parrot Uncle

F8003

Installation & Operating Instructions for the
Parrotuncle Owner's Installation, Manual

WARNING: SHUT POWER OFF AT FUSE OR CIRCUIT BREAKER

AFTER INSTALLATION

WOBBLE

The fan blades have been adjusted in the factory to minimize any wobble.

NOTE:CEILING FANS TEND TO MOVE DURING OPERATION DUE TO THE FACT THAT THEYARE MOUNTED ON A RUBBER CROMMET, IF THE FAN WAS MOUNTED RIGIDLY TO THECEILING, IT WOULD CAUSE EXCESS VIBRATION. MOVEMENT OF A FEW CENTIMENTERSIS QUITE ACCEPTABLE AND DOES NOT SUGGEST ANY PROBLEMTO REDUCE THE FAN WOBBLE: PLEASE CHECK THAT ALL SCREWS WHICH SECURED THE MOUNTINGBRACKET AND DOWNROD ARE SECURE,BALANCING AWOBBLING CEILING FAN:

1.Check that all blade and blade arm screws are secure.

2.Most fan wobbling problems are caused when blade levels are unequal. Check this level byselecting a point on the ceiling above the tip of one of theblades.Measure this distance.Rotate the fan until the next blade is positioned formeasurement. Repeat for each blade. The distance deviation should be equal within1/8"(0.32cm).

3.If the blade wobble is still noticeable, interchanging twoadjacent (side by side) blades can redistribute the weight.

AND POSSIBLY RESULT IN SMOOTHER OPERATION. WARNING: TO REDUCE THE RISK OF PERSONALINJURY, DO NOT BEND THE BLADE ARM WHILE INSTALLING, BALANCING THE BLADES, ORCLEANING THE FAN. DO NOT INSERT FOREIGN OBJECTS BETWEEN ROTATING FAN BLADES.

NOISE

When it is qulet(especially at night) you may hear occasional small noises.
This is normal. Please allow a 24.hour “breaking-in" period, most noises
associated with a new fan disappear during the time.
When it is qulet(especlally at night) you may hear occasional small noises.
This is normal. Please allow a 24.hour “breaking-in" period, most noises
associated with a new fan disappear during the time.

CARE AND CLEANING

1.Periodic cleaning ofyour ceiling fan is the only maintenance reguired, Use a soft brush or lint free cloth toavoid scratching the paint finish, Please make sure to turn off electricity power before you clean your fan.

2.Do not use water when cleaning your ceiling fan. It could damage the motor or the bladesand create the possibility ofan electrical shock.

3.motor has permanently lubricated ball bearing. no need to oil.

NOTE: MAKE SURE THE POWER IS OFF AT THE ELECTRICAL PANEL BOX BEFORE YOUATTEMPT ANY CLEANING OR REPAIRS.

Parrot Uncle

F8003

Installation & Operating Instructions for the
Parrotuncle Owner's Installation, Manual

WARNING: SHUT POWER OFF AT FUSE OR CIRCUIT BREAKER

Remote controller

INSTRUCTION OF INSTALLATION AND OPERATION

1. INSTALLING RECEIVER IN CEILING FAN

A.Safety precautions

1. WARNING: HIGH VOLTAGE! Disconnect power by removing fuse or switching off circuit breaker.
2. Do not use with solid state fans.
3. Electrical wire must meet all local and national electrical code requirements.
4. Supply for fan must be 110/120 volt, 60Hz, 3.5A
5. Maximum fan motor amps: 1.0.
6. Maximum light watts: 180 incandescent or ballast and LED.
7. To Reduce the risk of shock, this fan must be installed with a wall switch/control.

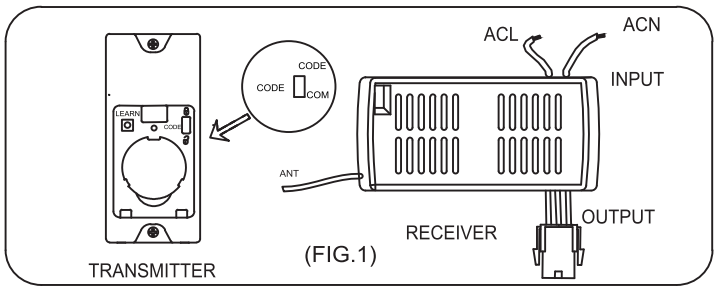

(FIG.1)

CAUTION: Ceiling Angle Shall Not Exceed 30 Degrees, For Mounting Controller. Models GA030

B. Installing receiver in fan

1. Remove power from the circuit.
2. Remove ceiling fan canopy from the mounting bracket.
3. Disconnect existing wiring between ceiling fan and Supply in electrical junction box.
4. Make connections as follows, using the wire nuts supplied.

CONNECT TO

Red/Black receiver wire(AC IN L).....Red/Black supply wire
White receiver wire(AC IN N).....White supply wire
White receiver wire(TO MOTOR N)...White fan wire
Black receiver wire(TO MOTOR L)...Black fan wire
Blue receiver wire(FOR LIGHT)...Blue light wire

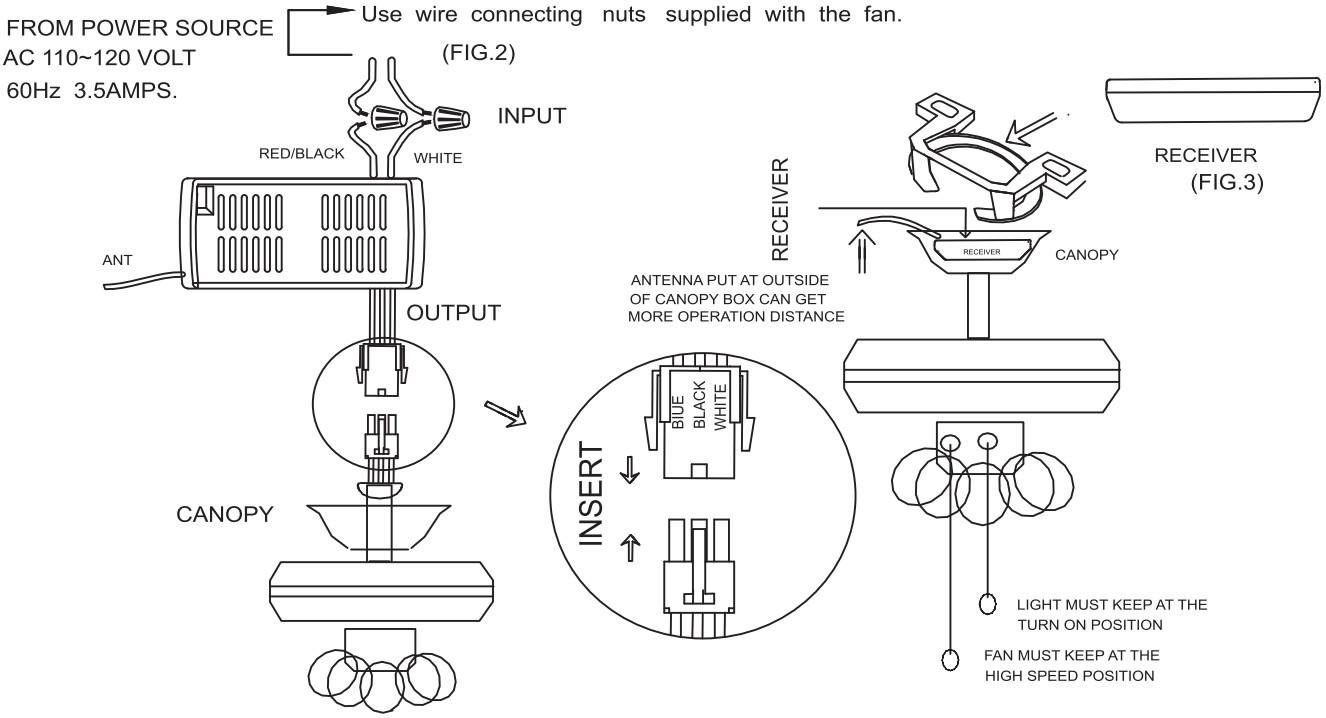

(FIG.2)

(FIG.3)

If other fans or supply wires are different color, have this unit installed by qualified licensed electrician.

a.Push all connected wires up into junction box.

b.Lay the brown antenna wire on top of the receiver,and put the receiver into the mounting bracket.

c.Reinstall the canopy on the mounting bracket.

d.Restore power.

e.Install 3.0 volt battery. (To prevent damage to transmitter, remove the battery if not used for a long time).

f. Store the transmitter away from excessive heat or humidity.

g.This remote control unit is equipped with roll code combinations. In order to prevent possible interference from or to other remote units such as garage door openers, car alarm or security system. If you find that your fan and light kit go on and off without using your remote control, simply change the code combination in your transmitter and receiver

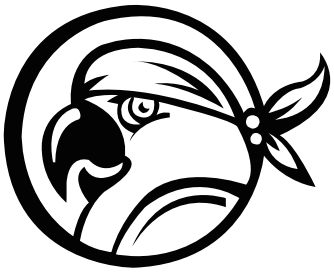

Parrot Uncle