7.2 WEEE Waste Electric and Electronic Equipment

In compliance with art.13 of the Legislative Decree n. 151 dated 25 July 2005, "Implementation of the 2002/95/CE,2002/96/CE and 2003/108/CE Directives, relative to the reduction of the use of dangerous substances in electric and electronic appliances, as well as the disposal of waste"

The barred wheeley-bin symbol on the appliance or the package indicates that at the end of the products useful life span, it must be collected separately from other waste. The recycling of this product at the end of its service life, is arranged for and carried out by the manufacturer. The user who wishes to dispose of this product must therefore contact the manufacturer and adhere to the system that he has adopted for the correct disposal of this product at the end of its service life. The correct disposal of the old product for the processes of recycling, treatment and compatible waste disposal will help prevent potential negative consequences for the environment and human health, and will result in the reuse and recycling of the materials and components which make up the appliance.

Abusive disposal of the appliance leads to the application of administrative sanctions envisioned by the Standards in force.

AUTHORISED DEALER

Ver. 001 Ed. 05.2020

VACUUM PACKAGING MACHINE

30
40
50
70

English

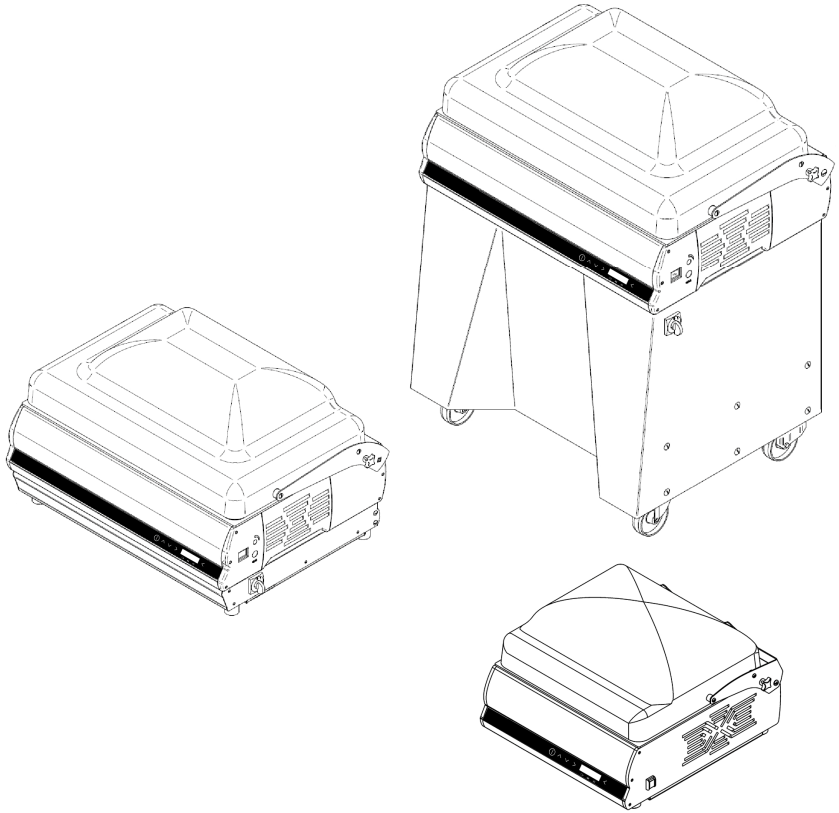

USE AND MAINTENANCE MANUAL

6 Obligations in the event of malfunctioning and/or potential dangers

The operators must inform their direct seniors of any deficiency and/or potential dangerous situation that should occur.

6.1 - User obligations

The user must inform the manufacturer immediately if any defects and/or malfunctioning of the accident-prevention system are detected, as well as any presumed dangerous situation of which he becomes aware.
It is prohibited for the user and/or third parties (excluding duly authorised manufacturer's staff) to make any type or entity of modifications to the machine and its functions, as well as to this technical document. In the event of malfunctioning and/or dangers, owing to failure to respect the afore-said, the manufacturer is not liable for any consequences. We recommend you request any modifications from the Manufacturer.

English

7 Troubleshooting

7.1 - Troubleshooting

1 After having connected the master switch, the machine does not start:

a) Check that the plug is well inserted into the socket and, if necessary, control the contacts inside the plug itself.
b) Check that on lowering the lid, the micro switch positioned on the rear below the left fixing hinge, is excited.

2 The machine operates regularly, but the package is not sealed when the lid is opened

a) Lift the Teflon and check that the resistance is not interrupted and it is blocked on the lateral clamps.

3 If the machine does not achieve an excellent vacuum

a) Close the lid and disconnect the line when a negative pressure of about 90% has been reached. Check whether the vacuum percentage indicated on the display remains fixed or decreases.
- In the first case, there are no leaks, therefore the problem has another source (pump vanes, oil replacement).
- In the second case, there is the presence of air infiltration into the lid:
  - Check the membrane below the sealing bar, checking that it has no holes or is ripped
  - Check the integrity of the sealing gasket positioned under the lid; if the afore-mentioned pieces must be replaced, request them directly from the authorised dealer.

5 Controls and maintenance

5.1 - Controls and maintenance

Access to the internal part of the machine is reserved exclusively to our specialised technician.
If the machine is accessed voluntarily, the manufacturer declines all civil and penal liability regarding any accidents or damage caused to persons or objects.
All electric components are protected within the machine body and the relative guard must be removed in order to gain access. Whenever access must be made, remove the plug from the electric control board current socket.

5.2- Maintenance

1. Clean the sealing bars and the silicon counter-bar more or less every 15 days using alcohol.
2. Change the oil every 400 hours of working (data variable depending on the type of product packed).
   After 2000 cycles the machine envisions an automatic oil control, the display shows the "**oil change**" message. The user must call the dealer, who will check the efficiency of the oil and will replace it, if necessary.
3. Replacement of electric resistances, Teflon sealing bar, lid sealing gaskets about every 200 working hours.
4. Replacement of the silicon counter-bar
5. Check pump vanes, filters, pneumatic solenoid valve seals every 35,000 work cycles.

5.2.1 - Vacuum pump

For the safeguarding and the duration of the vacuum pump, follow the indications given below scrupulously:

- Do not suck up steam, liquids and flours of any type.
  This compromises the viscosity of the pump oil and damages the pump itself.
- Periodically check the pump oil level through the visual inspection window
  A level below minimum can damage the pump
  A level above maximum can damage the pump filter and the pump itself
- Periodically check the colour of the pump oil. If the oil appears cloudy, dark or emulsioned, it must be replaced immediately.
- Replace the pump oil every 2 / 4 / 6 or 12 months, depending on use and location of the equipment, or appearing the notice "***change oil***" on the display.
  The pump oil may have to be replaced every month.
- **Replace the pump oil before prolonged machine shutdown.**

ATTENTION!!:
Considering that the vacuum packaging machine is nearly always located in the kitchen, an environment full of steam and humidity, the level and quality of the pump oil must be checked constantly and replaced frequently and periodically.

Types oil	
AGIP ARNICA 32	Q8 HAENDEL 32
SHELL TELLUST 32	ESSO INVAROL EP46

INDEX

1. Delivery and warranty 5
1.1 Foreword.
1.2 Preservation and use of this manual
1.3 Warranty
1.4 General recommendations and limits of liability of the Manufacturer
1.5 Description of the machine
1.6 Declared use
1.7 Use not allowed
1.7.1 Safety prescriptions
1.7.2 Lighting
1.8 Company information
1.8.1 Warning and Danger signs

2. Technical features 9
2.1 Main parts
2.2 Technical features
2.3 Dimensions and weight of the machine
2.4 Wiring diagram
2.4.1 Wiring diagram

3. Inspection, transport, delivery and installation 13
3.1 Inspection
3.2 Delivery and handling of the machine
3.3 Installation
3.3.1 Disposal of packaging
3.4 Connections
3.5 Electrical system hook-up
3.5.1 3-phase machine (220 V/60 Hz)
3.5.2 Single phase machine (120 V/60 Hz)

4. Using the machine 15
4.1 Key to controls
4.2 First power-up, installation settings
4.2.1 MENU language setting
4.2.2 Use type setting
4.2.3 Vacuum sensor calibration
4.2.4 Oil heating
4.3 Secondary settings
4.3.1 Oil heating and cleaning
4.3.2 Inert gas setting (where provided)
4.3.3 Printer setting
4.3.4 Label counter
4.3.5 Label counter reset
4.3.6 Label setting
4.3.7 Date and time setting
4.3.8 Buzzer volume setting
4.3.9 Reset WiFi
4.3.10 Date and time setting

English

4.4 Vacuum packing
4.4.1 Automatic packaging
4.4.2 Packaging with inert gas injection (optional)
4.4.3 Packaging with the use of the thermal printer
4.5 Packaging of liquid or semi-liquid products
4.5.1 Packaging liquid or semi-liquid products with the aid of the standard inclined surface
4.5.2 Packaging thin products with the aid of the optional raised surface
4.5.3 Packaging of products in external trays (with vacuum % control)
4.5.4 Packaging of products in external trays (with vacuum time control)
4.6 Examples of packaging in controlled atmosphere
4.7 Cleaning the machine
4.8 Machine at rest
4.9 Vacuum pump heating
4.10 Alarms

5. Controls and maintenance 30
5.1 Controls and maintenance
5.2 Maintenance
5.2.1 Vacuum pump

6. Obligations in case of malfunctioning and/or potential dangers 31
6.1 User obligations

7. Troubleshooting 31
7.1 Troubleshooting
7.2 WEEE Waste Electric and Electronic Equipment


```
OIL HEATING CYCL
              70°
```

The equipments makes 2 sounds ath the end of the process, the display will show 13 LED's on and a temperature of 70°.
Then the message **READY TO USE, THANK YOU** will show.

```
 READY TO USE
   Thank you!
```

The equipment will return automatically to the program in use before the alarm.

The oil heating cycle can be stopped by pressing ON and will be considered not completed.

```
OIL HEATING CYCL
Immediately
```

The oil cleaning cycle can be postponed as the message

```
OIL HEATING CYCL
Postpone
```

shows. Press RIGHT arrow to change, **Immediately** starts flashing.
Use UP and DOWN arrows to select **Postpone**,wait for 5 seconds Or press LEFT arrow to confirm, the selected command will stop flashing.
A new message will remind to clean oil after 50 cycles.

OIL MIX
If the equipment is seldom in use, this automatic procedure will keep the pump efficient and well lubricated.

```
AUTO OIL MIX
Do not stop!  15
```

The display shows **AUTO OIL MIX**, the message **DO NOT STOP** will flash during a 15 seconds countdown, no action is requested during this process. The equipment will then return to standby mode.

If the equipment is seldom in use,switched off and disconntected from the power source, the automatic procedure that lubricates the pump is blocked. After the equipment is switched on, the display may show the message **POSSIBLE PUMP STUCK**, which is not a proper alarm but rather a chance to be verified. Once the warning is over, the equipment can operate as usual, if the pump is working regularly, the warning is automatically reset.

```
POSSIBLE PUMP
STUCK
```

```
PUMP IS STUCK
Call service
```

If the pump is actually stuck, the display will show the message **STUCK PUMP**, the electronic control will stop the pump in order to avoid any damage. Refer to the technical service to proceed with the maintenance of the pump at this point.

English

4.10 Alarms

OIL REPLACEMENT

```
CHANGE  PUMP
OIL                 60
```

The message "**REPLACE OIL**" appears on the display when the equipments reaches the maximum amount of cycles.
The equipment stops working and the message shows for 10 seconds, as a warning for the operator, then the displays returns to the program that was in use.
The equipment can be used further until it reaches 200 cycles, then it stops again and shows the message REPLACE OIL for 30 seconds, then it starts again.

EQUIPMENTS WITH AUTOMATIC OIL REPLACEMET (A.O.R.)
If the equipment has the A.O.R. installed, it stops and shows the message "**AUTOMATIC OIL REPLACEMENT**".

```
OIL  REPLACEMENT
AUTOMATIC  YES-NO
```

Use RIGHT and LEFT arrows to select YES or NOW, the selected values will flash. Wait for 5 seconds until the next step.

```
OIL  REPLACEMENT
AUTOMATIC      YES
```

If NO is selected, the equipement will start again and will work further for 50 cycles. After 50 cycles the oil replacement message will appear again and YES will be the only option to be selected.

```
CONNECT  OIL  TANK
AND  PRESS  ON
```

Select YES
Follow the instructions on the display.

```
OIL  REPLACEMENT
ONGOING
```

The display shows: **CONNECT OIL TANK AND PRESS "ON"**, after ON is pressed the display will show **OIL REPLACEMENT RUNNING.**

```
REPLACE  OIL
TANK
```

At the end of the procedure the equipment will make a sound.

If the display shows **REPLACE OIL TANKS** it means the oil tank is full, and reminds the operator to replace the tanks during the next oil replacement.

```
PUMP  TEMP.      90°
Restarts  at     70°
```

The equipment is now ready.

PUMP OVERHEATING
When the temperature sensor reaches 90°, the equipment stops until the temperature returns to 70°. The display shows **PUMP TEMP. 90° STARTS AGAIN AT 70°**

```
OIL  HEATING  CYCL
Immediately
```

This message keeps showing until the temperature reaches 70°.
The equipments starts automatically after the pump has cooled down.

```
OIL  HEATING  CYCL
Close  black  cap
```


1 Delivery and warranty

1.1 - Foreword

ATTENTION!
The symbols used in this manual intend to call the reader's attention to points and operations that put the operator's personal safety at risk or which can cause damage to the machine itself.
Do not operate with the machine if you are not certain to have correctly understood that highlighted in these notes.

ATTENTION!
Some illustrations in this manual represent the machine or parts of the same with panels or guards removed. This is in order to make things clearer.
Do not use the machine in these conditions, but only with all protections mounted correctly and in perfect working order.

The Manufacturer prohibits reproduction, even partial, of this manual and its content cannot be used for purposes not permitted by the same.
Any breach thereof will be dealt with under the provisions of said Law.

1.2 - Preservation and use of the manual

The purpose of this manual is to make the users of the machine aware of the prescriptions and essential criteria relative to transport, handling, use and maintenance of the machine itself, via texts and figures.
Therefore, this manual must be read thoroughly before the machine is used.
Keep it in a safe place near to the machine, which is easy and quick to access for future consultation.
If the manual is lost or deteriorated, request a copy from your dealer or the Manufacturer directly.
If the machine is transferred, inform the Manufacturer of the name and address of the new owner.
This manual reflects the state of the art at the time of marketing and cannot be considered inadequate merely because it is updated successively on the basis of new developments. The manufacturer also reserves the right to update production and relative manuals without the obligation to updating earlier issues, except in exceptional cases.
If in doubt, consult the nearest after-sales centre or the Manufacturer directly.
The manufacturer is intent on continuous optimisation of its product.
For this reason it is pleased to receive any signals or proposals for improvement of the machine and/or manual.
The machine has been delivered to the user with valid warranty conditions at the time of purchase.
Contact your own supplier for all clarifications.

English

1.3 - Warranty

The Manufacturer is committed for 12 (twelve) months, from the date of shipping and direct delivery of the goods, to guaranteeing the customer or authorised dealer the integrity and good operation of the components relative to the machinery in question.

The warranty excludes all parts of the machinery subject to normal wear, i.e components in which use generates unstoppable constant wear:

A. Electric resistances – Teflon - Sealing gaskets – Lid opening pistons – Sealing membrane– Air filters – Oil filters – Oil change – Pump vanes.

B. Whenever a vacuum pump relative to a machine under warranty is returned to the Manufacturer due to problems regarding suction and malfunctioning, the Manufacturer reserves the right to control whether foreign bodies have been sucked up: (liquids, solids, juices, sauces etc.). If this situation is verified, the repair materials and labour will be charged regularly, as the problem is not linked to manufacturing defects but Customer negligence during use.

C. Any problems linked to the electronic circuit boards of the circuit must be examined by the Manufacturer before the piece to be replaced is sent under warranty. A voltage change, electric over-feeding, interference in the external mains, could cause damage that is not the manufacturer's fault or which can be blamed on the manufacture of the piece.

D. Any problems linked to pneumatic, structural, mechanical parts, will be solved normally under warranty without charge.

E. During the warranty period, for interventions covered by the same, there will be no charge for the materials replaced, while labour costs will be calculated. For any interventions performed during the warranty period that are not covered by the warranty itself, the materials replaced and the labour will be charged regularly.

F. If external interventions by our technicians are requested during the warranty period, travel expenses (return) will be charged in full, independent of the cause of the intervention.

1.4 - General recommendations and limits of liability of the Manufacturer

Every operator-machine interaction, within the declared use ambit and the entire life cycle of the same, has been carefully and thoroughly analysed by the Manufacturer during the design and construction phases and when drawing up the instruction manual. In spite of this, it is intended that nothing can replace the experience, suitable training and especially the "good common sense" of those interacting with the machine. The last requisites are therefore deemed indispensible in every operational phase inherent the machine and when reading this manual.

Failure to comply with the precautions or specific recommendations present in this manual, use of the machine by unsuitable staff, violate all Safety Standards concerning the design, manufacture and declared use of the supply and relieve the Manufacturer from all liability in the event of damage/injury to objects/persons.

FRESH MEATS	
BEEF	30/40 days
VEAL	30/40 days
PORK	20/25 days
WHITE MEATS	20/25 days
RABBIT AND GAME ON THE BONE	20 days
LAMB/GOAT	30 days
SAUSAGES	30 days
OFFAL	10/12 days

The table below shows some product types with the mixtures that have been established for them.

"To guarantee the machine inlet pressure of 0.4 – 0.5 Bar, we recommend using a pressure gauge with a scale from 0 to 3 Bar to set the gas pressure because it is much more accurate than one with a scale from 0 to 30 Bar. The machine could have problems during operation if the gas inlet pressure is not as specified."

English

4.7 - Cleaning the machine

ATTENTION!

Disconnect the machine from the mains electricity before cleaning.

Do not clean the machine using a jet of water. Use non-toxic detergents only, expressly intended for clearing components coming into contact with foodstuffs. **DO NOT** use chlorine-based detergents. **DO NOT** use ethyl alcohol to clean the lid. The lid must be cleaned regularly with a soft, damp cloth, using cold or warm water, with a small amount of neutral detergent. It is recommended to avoid:

- the use of products containing: denatured ethyl alcohol, solvents in general, Benzene, Trichloroethylene
- the use of abrasive materials and contact with sharp objects

Drying When the lid has been cleaned, it can be dried using a slightly damp chamois cloth, without rubbing hard.

4.8 - Machine at rest

ATTENTION! If the machine is not used for a long period of time, to prevent dirt and dust depositing inside the chamber, close and fix the lid using the relevant fixing knob. If the machine is not to be used for a week or more , we suggest to change the oil, even if this operation was done recently.

4.9 - Vacuum pump heating

During the winter period, in the morning it is recommended to briefly pre-heat the

4.6 - Examples of packaging in controlled atmosphere
NEVER USE MIXTURES WITH OXYGEN OVER 20%

PRODUCT	OXYGEN % (O_2)	CARBON DIOXIDE % (CO_2)	NITRO-GEN % (N_2)
Deli cold cuts	-	20	80
Bear/Beverages in cans	-	100	
Biscuits and baked products	-	100	100
Coffee	-	100	100
Freeze-dried meats and spices	-	-	100
Minced meat	-	-	100
Chocolate	-	100	-
Fresh cheese/Mozzarella	-/-	20/-	80/100
Hard cheeses	-	-	100
Fresh salad/Parsley	-	50	50
Yogurt/Puff pastry	-	100	-
Powdered milk	-	30	70
Powdered dry yeast	-	100	100
Apples	2	1	97
Sliced pork belly	-	35	65
Sliced bread/Bread	-	100	-
Toast/Danish toasts	-	80	20
Pasta	-	-	100
Fresh pasta/tortellini/lasagne	-	70/100	30
Potatoes/Chips/Snacks/Hops	-		100
Blue Fish	-	60	40
Pizza	-	30	70
Poultry	-	75	25
Tomatoes	4	4	92
Pre-cooked products	-	80	20
Cured meats	-	20	80
Fruit juices	-	-	100
Trouts/ Farmed fish	-	100	-
Wine/Oil	-	-	100

PRESERVATION TIME OF VACUUM PACKE DPRODUCTS
KEPT AT A TEMPERATURE OF +0°/+3° C.
FISH: Average duration 7/8 days with extremely fresh product
CURED COLD CUTS: Maintenance time to perfection over 3 months
MATURED CHEESES: Grana, pecorino, etc. 120 days
FRESH CHEESES: Mozzarella, brie, etc 30/60 days
VEGETABLES: In general 15/20 days

The Manufacturer is not deemed liable for the consequences caused by the user's failure to comply with the safety precautions given in this manual.

1.5 - Description of the machine
The vacuum packaging machine with lid is controlled electrically and therefore not subject to wear. The electronically-governed sealing system, is composed of a flat resistance (5mm) stainless steel bar which, thanks to an excellent pneumatic system installed, guarantees balanced and even sealing on any type of bag to be used (nylon, polyethylene, Cryovac).
The vacuum pumps used are very modern and guarantee surprising silence even though operating with uninterrupted cycles along with a very high level of final vacuum.

The models represented in this manual have been created in compliance with the **2006/42 EEC Directive** and successive amendments.
In the event of an accident, the manufacturer cannot be held responsible if the machine has been modified, tampered with, the safety protections have been removed or used in ways not declared by the manufacturer.

1.6 - Declared use
The machine has been designed and manufactured to vacuum pack products according to the instructions in this manual and must be intended for this use only. Any other use must be considered improper and therefore dangerous. The Manufacturer cannot be considered responsible for any damage deriving from improper, incorrect or unreasonable use.
It must be used in professional environments and any staff using the machine must have experience in the sector and have read and understood this manual.

1.7– Uses not allowed
1.7.1 - Safety prescriptions
The following points must be respected:
1 never touch the metal parts of the machine with wet or damp hands;
2 do not pull the power supply cable or the appliance itself, to disconnect the plug from the current;
3 do not allow the packaging machine to be used by children or untrained staff;.
4 the electric safety of this machine is only assured when the same is correctly connected to an efficient earth plant, as envisioned by the electric Safety Standards in force; this fundamental requirement must be verified. If in doubt, request an accurate control of the system by professionally qualified staff; the Manufacturer cannot be considered responsible for any damage caused by the failure to earth the system;
5 in the event of possible damage to the earth protection, the machine must be put out of service, in order to prevent undesired and/or involuntary activation;
6 always use protection fuses that are in compliance with the Safety Standards in force, with the correct value and suitable mechanical features;

English

7 avoid the use of repaired fuses and the creation of short circuits between the terminals on the fuse holders;
8 the packaging machine power supply cable must never be replaced by the user; contact the machine manufacturer exclusively in the event of damage to the cable, or for its replacement;
9 keep the cable away from hot parts;
10 always switch the machine off and disconnect it from the mains electricity before starting any global clearing procedure or washing operation;
11 clean the machine coverings, panels and commands using soft, dry cloths dampened in a weak solution of detergent or alcohol;
12 The machines for use with Gas are not set-up for use with mixtures containing over 20% oxygen.

1.7.2 - Lighting

The place of installation of the machine must have sufficient natural and artificial lighting in compliance with the Standards in force in the country of installation of the packaging machine.
In all cases, the lighting must be uniform and guarantee good visibility in all parts of the packaging machine and must not create dangerous reflections.
The lighting must allow the control panels to be read correctly and clearly identify the emergency buttons.

1.8 - Company details

An exact description of the "Model", the "Serial number" and the "Year of Manufacture" of the machine will facilitate quick and effective response by our after -sales assistance. It is advised to indicate the model of the machine and the serial number every time the after-sales service is contacted.
Identify the plate data represented in fig. 1.8.1.
We suggest you write the data of your machine in the box below as a reminder.

Machine Model……..
Serial number……
Year of construction……..
Type……..

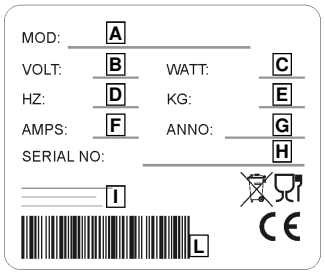

A = Machine model
B = Power supply
C = Motor power
D = Motor frequency Hz
E = Weight
F = Amperage
G = Year of construction
H = Serial N°
I = Manufacturer
L = Bar code

Fig. 1.8.1

4.5.2 - Packaging thin products with the aid of the optional raised surface

It is advisable to use the raised surface to aid packaging of thin products such as cold cuts.

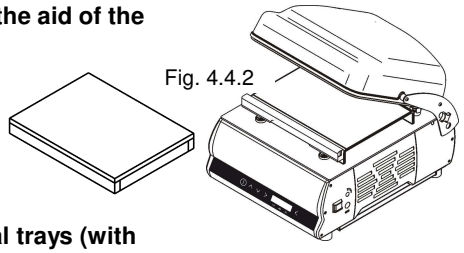

Fig. 4.4.2

4.5.3 - Packaging products in external trays (with vacuum % control)

It is advisable to use the external suction kit to aid packaging of products stored in external trays.
1. Connect the machine to the mains power
2. Unscrew the black knob (ref. 1 in fig. 4.4.3) on the right side of the machine to free the hood in order to start operation.
3. Power up the machine with the switch (ref. 2 in fig. 4.4.3) on the right side.
4. Select the “EXT VACUUM AUTO” program from the menu.
5. Remove the suction cap (ref. 3 in fig. 4.4.4).
6. Attach the suction kit hose (ref. 4 in fig. 4.4.5).
7. Attach the suction kit connector to the tray cover valve (ref. 5 in fig. 4.4.5).
8. Select the percentage vacuum that you want in the tray (from 50% to 100%).
9. Use the start key to start the program.
10. The machine will stop automatically when the vacuum reaches 100%

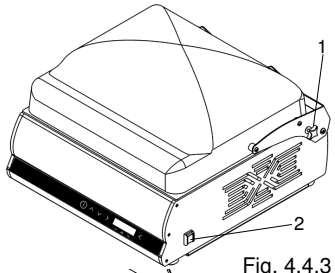

Fig. 4.4.3

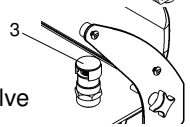

Fig. 4.4.4

Fig. 4.4.5

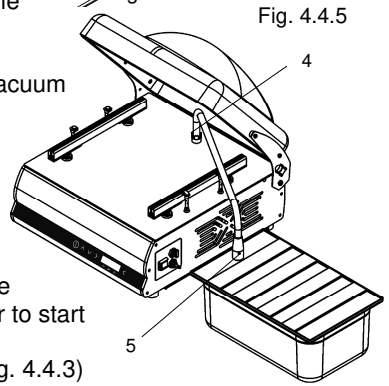

4.5.4 - Packaging products in external trays (with vacuum time control)

1. Connect the machine to the mains power
2. Unscrew the black knob (ref. 1 in fig. 4.4.3) on the right side of the machine to free the hood in order to start operation.
3. Power up the machine with the switch (ref. 2 in fig. 4.4.3) on the right side.
4. Select “EXT VACUUM TIME” from the program menu.
5. Remove the suction cap (ref. 3 in fig. 4.4.4).
6. Attach the suction kit hose (ref. 4 in fig. 4.4.5).
7. Attach the suction kit connector to the tray cover valve (ref. 5 in fig. 4.3.5).
8. Edit the suction time to the desired value.
10. Use the start key to start the program.
11. The machine stops automatically when the set suction time expires.

English

4.4.3 - Packaging with the use of a thermal printer

If the thermal printer option has been enabled in the machine, a label containing the following data will be printed for each vacuum cycle:

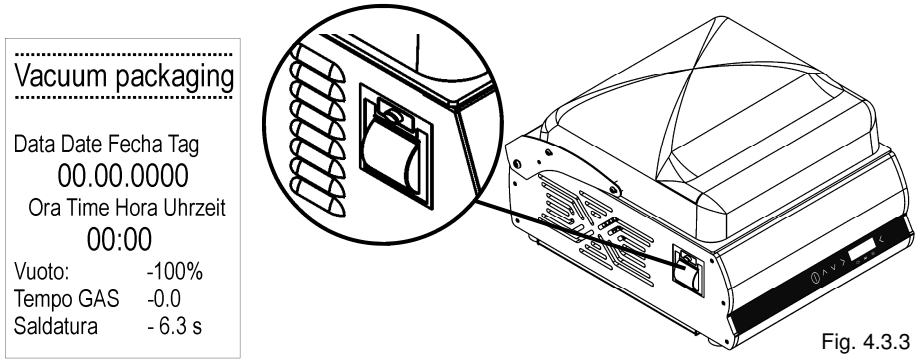

Fig. 4.3.3

Pressing the left arrow once will print the last label again.

4.5 - Packaging liquid or semi-liquid products

Our hood vacuum packaging machine can be used to vacuum pack liquid or semi-liquid products (soups, dressings, sauces, etc.) to conserve them longer without altering their flavour or hygiene.
In such cases, the bags must never be filled to the limit, but only up to 50% of their capacity, while ensuring that the edge is higher than the sealing bar.

1. Select the “LIQUID AUTOMATIC” program
2. Close the hood, and the process will start.
3. Since liquids are incompressible, there is no need for packaging in a modified atmosphere, so inert gas is not required
4. The machine pauses twice before sealing the bag.
5. All packages can stored stacked normally in a cold store.

4.5.1 - Packaging liquid or semi-liquid products with the aid of the standard inclined surface

It is advisable to use the inclined surface to aid packaging of liquid products.

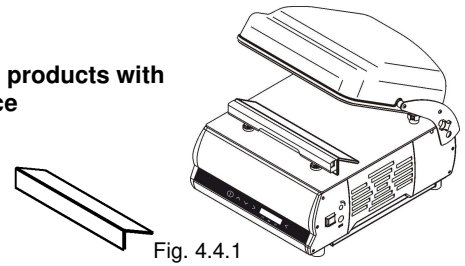

Fig. 4.4.1

1.8.1 - Warning and danger plates (Fig. 1.8.2)

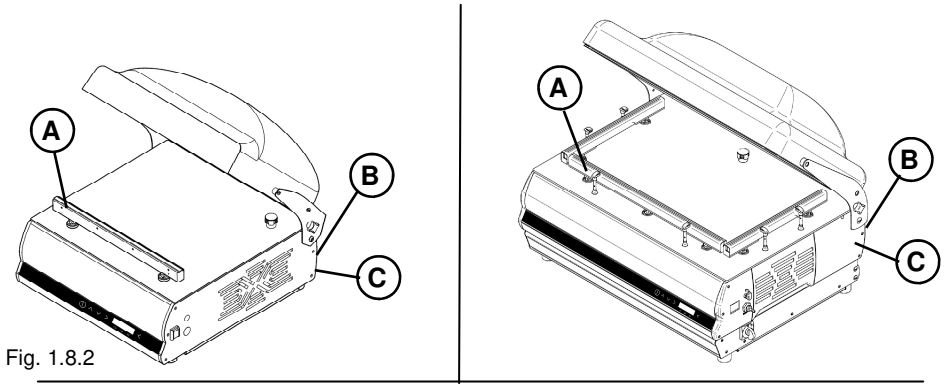

Fig. 1.8.2

2 Technical features

2.1 - Main parts

To facilitate comprehension of the manual, the main machine components are listed below and represented in fig. 2.1.1.

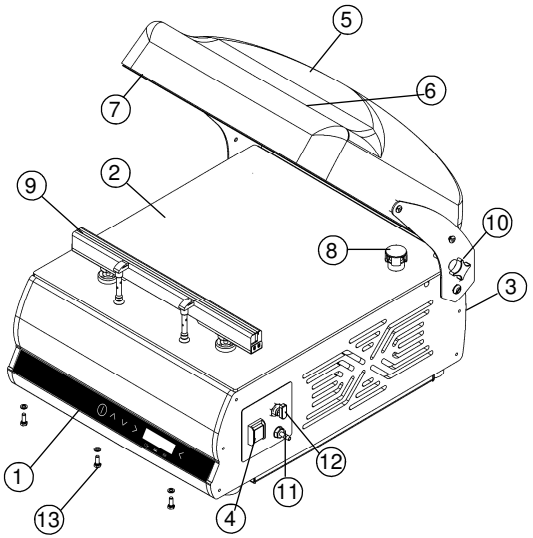

1. Control panel
2. Surface
3. Power supply cable
4. Master switch
5. Transparent lid
6. Silicon counter-bar
7. Sealing gasket
8. Suction pipe for vacuum
9. Sealing bar
10. Lid fixing knob
11. Gas pipe fitting.
12. Soft-air cock
13. Front profile locking screws

Fig. 2.1.1

English

2.2 - Technical features

	30/8	30/12	40	50	50 x2	70/40
Power Kw	0,35	0,45	0,75	0,75	0,75	1.1 KW
Vacuum pump	8 mc/h	12 mc/h	21 mc/h	21 mc/h	21 mc/h	40 mc/h
Sealing bar	310 mm	310 mm	410 mm	510 mm	n. 2 x 410 mm	n. 1 x 640 mm n. 2 x 410 mm
Chamber dimensions	340x360x h130 mm	340x360x h130 mm	430x410x h140 mm	540x430x h190 mm	545x460x h190 mm	780 x 480 h 190 mm
Power supply	120V/60Hz	120V/60Hz	120V/60Hz	120V/60Hz	120V/60Hz	220V 3ph/ 60Hz
Oil tank capacity	ml 250	ml 450	ml 450	ml 450	ml 450	1 lt

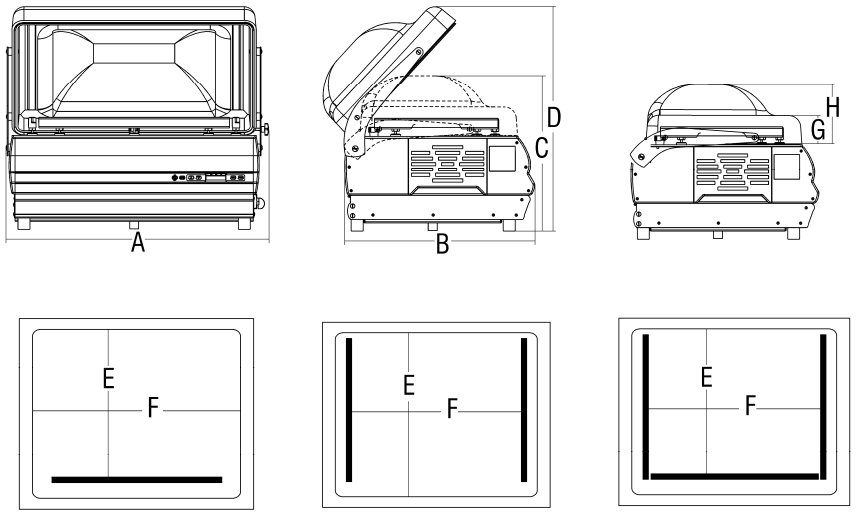

Fig. 2.3.1

2.3 - Dimensions and weight of the machine

	A	B	C	D	E	F	G	H	Net weight
	mm	*mm*	*mm*	*mm*	*mm*	*mm*	*mm*	*mm*	*Kg*
30	402	525	360	480	333,5	340	85	140	46
40	493	585	370	542	390	430	85	150	56
50	609	640	420	605	430	540	90	200	70
50 x2	609	640	420	605	424	428	90	200	71
70	850	650	520	670	424	660	90	200	115
70 P	850	650	1134	1368	424	660	95	200	167

Press the right arrow; the sealing time will start flashing.
Use the up and down arrows to edit this value in steps of 1/10 second.
Press the right arrow; the gas time will start flashing.
Use the up and down arrows to edit this value in steps of 1/10 second.
To save the changes, wait 5 seconds or press the left arrow until you have exited from editing mode and the values stop flashing.
Alternatively, close the hood and the machine will start operating .

4.4.2 Packaging with inert gas injection (optional)

CAUTION! ONLY USE GAS WITH A MAXIMUM OXYGEN CONTENT OF 20%. MIXTURES WITH HIGHER PERCENTAGES OF OXYGEN ARE POTENTIALLY HAZARDOUS IF USED WITH THIS MACHINE

Connect the hose from the cylinder to the fitting on the right side of the machine, and set the pressure gauge on the cylinder to 0.4 – 0.5 Bar.
After activating gas injection

- Select a suitable program for packaging the product.
  Normally the gas injection time should never exceed 6 – 7 seconds as gas saturation under the hood would cause the pressure of the sealing bars to drop (minimum vacuum under the hood = 70%).
- Place the bag containing the product in the vacuum chamber, with the gas injection nozzle inserted into the mouth of the bag; make sure there are no folds blocking the gas flow.
  When using large bags, two nozzles can be inserted simultaneously to avoid wasting gas under the hood.

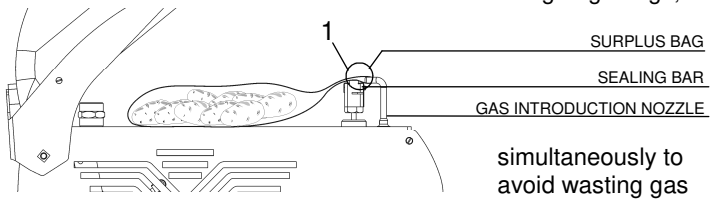

Fig. 4.3.2

SIAD PERGINE | SIO LINDE GAS | SAPIO SOL | RIVOIRA

The major food-grade gas suppliers are:

You can normally find their addresses under GAS in the telephone directory.

SEALING TIME	MATERIAL	THICKNESS (micron)
2 “	CRYOVAC / HEATSHRINK	-
4,5 “	BAGS	100
5,5” - 6”	BAGS	140

English

EXT VACUUM AUTO
100% s.s.cov.

This is for packaging products using an external vacuum.
If the vacuum is set higher than 70%, the text “s.s. cov.” will flash on the display.
It is advisable to use a stainless steel cover on the tray when starting a cycle with an external vacuum higher than 70%.
If you want to edit the settings in this program, press the right arrow; the vacuum value (100%) will start flashing.
Use the up and down arrows to edit this value from 50 to 100%.
Use the start key to start the program.

EXT VACUUM TIME
30 sec s.s.cov.

Press the down arrow to proceed to the next program

This is for packaging products using an external vacuum.
If the vacuum is set higher than 70%, the text “s.s. cov.” will flash on the display.
It is advisable to use a stainless steel cover on the tray when starting a cycle with an external vacuum higher than 70%.
To edit the settings in this program, press the right arrow; the vacuum time value (30) will start flashing.
Use the up and down arrows to edit this value in steps of 1 second.

MARINATION
100% 4.8 Sec

Use the start key to start the program; the display will count down to 0.
Press the down arrow to proceed to the next program.

Three-step vacuum cycle. Closing the hood starts the first vacuum cycle, which reaches 100%. The machine then stops for 30 seconds, discharges the air and restarts the vacuum cycle.
The bag is sealed at the end of the third cycle.
To edit the settings in this program, press the right arrow; the vacuum value (100%) will start flashing.
Use the up and down arrows to edit this value from 50 to 100%.
Press the right arrow; the sealing time (4.8) will start flashing.

EXT MARINATION
100%

Use the up and down arrows to edit this value in steps of 1/10 second.
To save the changes, wait 5 seconds or press the left arrow until you have exited from editing mode and the values stop flashing.
Alternatively, close the hood and the machine will start operating.
Press the down arrow to proceed to the next program

THREE-STEP VACUUM
100% 5.0 Sec

Three-step vacuum cycle. Pressing the start key starts the first vacuum cycle, which reaches 100%. The machine then stops for 30 seconds, discharges the air and restarts the vacuum cycle.
The bag is sealed at the end of the third cycle.
The settings in this program cannot be edited.
Press the down arrow to proceed to the next program .

2.4 - Wiring diagram

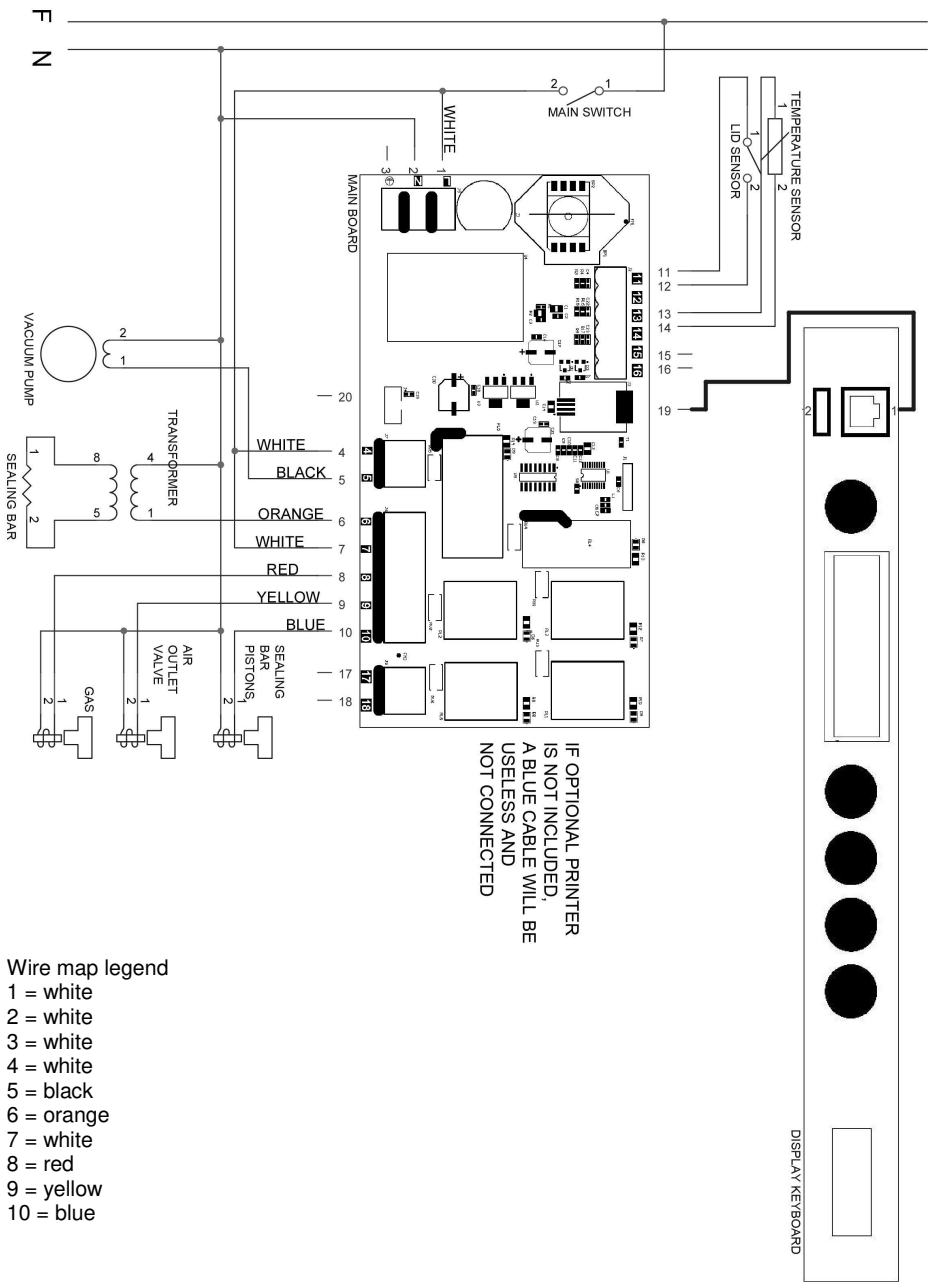

Wire map legend
1 = white
2 = white
3 = white
4 = white
5 = black
6 = orange
7 = white
8 = red
9 = yellow
10 = blue

Fig. 2.4.1

English

3 Inspection, transport, delivery and installation

3.1 - Inspection

The machine you own has been inspected at our establishment in order to certify correct operation and adjustment.

3.2 - Delivery and handling the machine

All material delivered has been accurately controlled before consignment to the carrier.
Unless agreed differently with the Customer or for particularly onerous transport, the machine is wrapped in nylon and cardboard.
The packaging dimensions are given in fig. 3.2.1

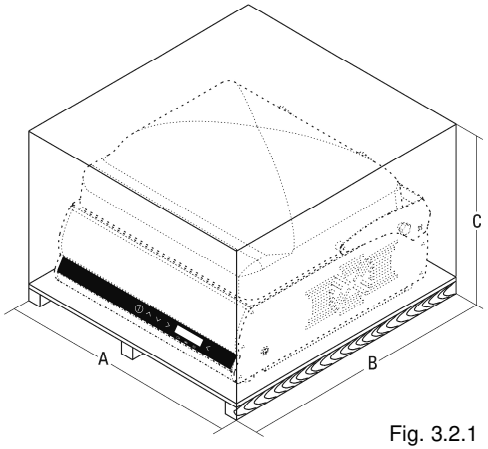

Fig. 3.2.1

	A	B	C	Gross weight
	mm	*mm*	*mm*	*Kg*
30	720	570	770	57
40	760	640	770	67
50	840	870	750	84
70	1200	800	720	128
70 P	1200	800	1350	180

On receipt of the machine, check the integrity of the packaging.
If the packaging is damaged, sign the documents for receipt with the following note:
"Accepted subject to checking..." and the reason.
Open the packaging, and in the presence of machine components that are really damaged, make a claim to the carrier within three days from the date indicated on the documents.

3.3 - Installation

After having removed the packaging, check the integrity of the machine.
In particular, check that the machine is integral and without visible damage, which could have been caused during transport.
If in doubt, do not use the machine and contact the Manufacturer.

Place

4.4 Vacuum packaging

After making all the primary settings, the machine is ready for use.
- Connect the machine to the mains power.
- Unscrew the black knob on the right side of the machine to free the hood in order to start operation.
- Power up the machine with the switch on the right side. The display will turn on and show the main screen.
- Use the up and down arrows to scroll through the list of preset programs
- Place the bag on the surface with the open side resting perfectly flat on the sealing bar.
- Lower the hood and apply firm pressure to keep it closed and start the operating cycle. When packaging with an external vacuum, press the start button to start the cycle.

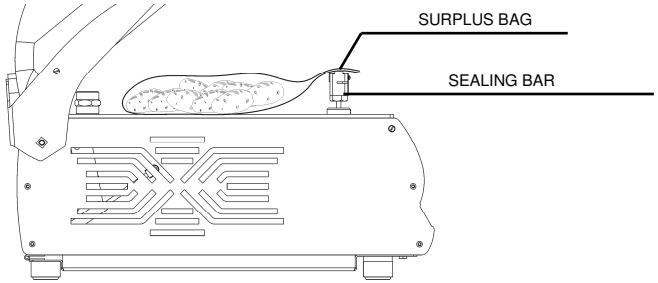

Fig. 4.3.1

4.4.1 Automatic packaging

The machine offers automatic packaging by default. You can choose from a list of preset programs and a list of timer programs from 0 to 9 that you can set according to your time preferences.

```
AUTOMATIC  SENSOR
100%  5.0  7.5  Sec
```

```
LIQUID  AUTOMATIC
100%  5.0  off  Sec
```

Use the up and down arrows to scroll through the list and choose the most suitable program.
Close the hood, and the machine will start the vacuum packaging process.
Preset programs

To edit the settings in these programs, press the right arrow; the vacuum value (100%) will start flashing.
Use the up and down arrows to edit this value from 50 to 100%.
Press the right arrow; the sealing time (5.0) will start flashing.
Use the up and down arrows to edit this value in steps of 1/10 second.

English

If instead the machine has the A.O.R. accessory,
press the down arrow to enter the A.O.R. menu.

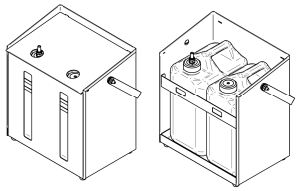

4.3.12 A.O.R. Automatic oil replacement (optional)
This is a system that changes the oil automatically using external tanks connected to the pump.

```
OIL  REPLACEMENT
AUTOMATIC  NO  YES
```

To execute the automatic oil replacement cycle, select YES and follow the instructions on the machine display.

```
CONNECT  OIL  TANK
Close  black  cap
```

The following text will scroll on the display: “CONNECT OIL TANKS, CLOSE BLACK CAP AND PRESS ON ”

```
OIL  REPLACEMENT
IN  PROGRESS
```

```
OIL  REPLACEMENT
FINISHED
```

The oil replacement process will start and the display shows the text

The procedure ends when the oil in the pump reaches the maximum level.
The display shows the text “OIL REPLACEMENT FINISHED”
The machine emits a sound and returns to the last program used.
If, for any reason, the oil replacement cycles does not complete the cycle correctly, the machine display will show the following warning message:

```
ATTENTION  OIL
REPLACEMENT  FAIL
```

CAUTION OIL REPLACEMENT FAILED, NO OIL IN PUMP.

```
REPLACE  OIL
TANKS!!
```

The oil replacement procedure can be repeated. The machine allows up to three consecutive attempts if the procedure fails

4.3.13 Settings shortcuts
You can use keyboard shortcuts for the main functions of the menu:

Press RIGHT arrow 3 times = **preheating.**

```
OIL  HEATING  CYCL
Close  black  cap
```

Follow the instructions on display

```
GAS  FLUSH
Activated
```

Press and keep RIGHT arrow for 3 seconds = **gas on/off**

```
PRINTER
Deactivated
```

```
PRINTER
Activated
```

Press and keep LEFT arrow = **printer on/off**

Press LEFT arrow 1 time = **repeats last print** (no instructions appear on display)

Before carrying out any check that leads to the removal of some items, the plug must be removed from the mains electricity.

3.3.1 - Disposal of the packaging
The packaging materials such as cardboard, nylon and wood are products similar to solid urban waste. They can therefore be disposed of freely.
Nylon is a pollutant, which produces toxic fumes if burned.
Do not burn and disperse in the environment, but dispose according to the Laws in force.
If the machine is in a country where there are particular regulations, dispose of the packaging in compliance with that described by the Standards in force.

English

3.4 - Connections
Before start-up, check the oil level via the control window present on the pump.

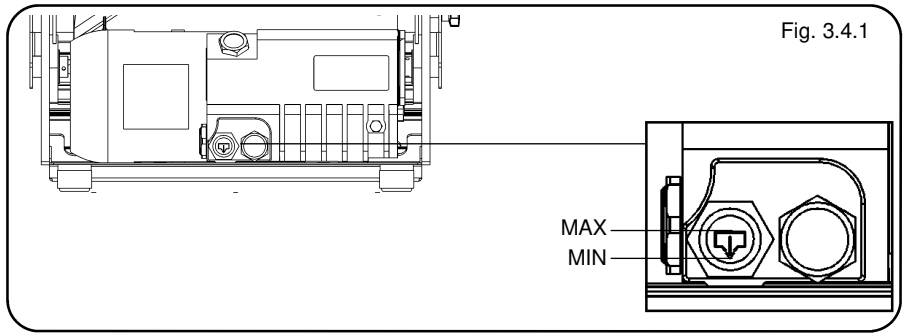

Fig. 3.4.1

Before connecting the packaging machine, make sure that the plate data correspond with that of the mains electricity.
The plate is on the rear of the machine.
When the level has been checked and everything closed, connect the plug to the 230V socket.
In the event of incompatibility between the socket and plug, have the socket replaced with a suitable one by professionally qualified staff.
In particular, the latter must check that the section of the cables is suitable for the input power of the machine. In general, the use of adapters, multiple socket outlets and/or extensions is not recommended.
Whenever their use is indispensible, only simple or multiple adapters and extensions must be used that are in compliance with Safety Standards in force; however paying attention not to exceed the capacity limit in terms of current value, and the maximum power value marked on the multiple outlet.

3.5 - *Electrical system hook-up*

ATTENTION!

- Make sure that its voltage matches the value displayed on the machine's rating Plate. **A**ll work on the electrical system of the machine must be carried out by specialized staff duly authorized for its performance by the manager in charge. Hook the machine to a power grid that has an efficient earthing connection.

3.5.1 - 3-phase machine (220 V/60 Hz)

These machine versions include 11 AWG power cable.
The power cable is plugged into a quadripolar 3-phase socket. Hook the cable to the 3-phase power grid, interposing a 16 ampere differential circuit breaker.

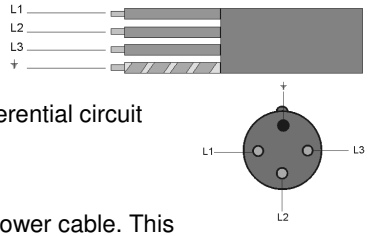

3.5.2 - Single-phase machine (230 V/60 Hz)

This machine version includes 16 or 12 AWG power cable. This power cable is pulgged into a tripolar single-phase socket. Hook the cable to a single-phase 230 Volt-60 Hz power grid, interposing a 16 ampere differential circuit breaker. For machine versions configured with a different voltage, contact the manufacturer for instructions. If there is need to extend the power cable, use a cable with the same diameter as the one installed by the manufacturer.

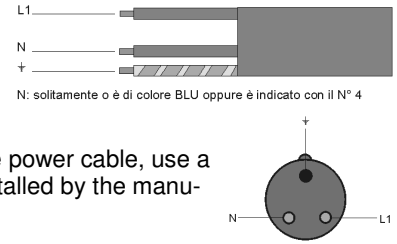

In the three-phase connection line, at the installation time, check the motor fan rotation. That must be the same as the one indicated by the arrow

English

4.3.6 Label setting

```
1 S T   R O W   L A B E L
X x x x x
```

Press the RIGHT arrow; the first letter will start flashing. Use the UP and DOWN arrows to edit the individual letters. Press the RIGHT arrow to move to the next letter. Use the LEFT arrow to return to the previous letters and edit them if necessary. Press the LEFT arrow while on the first letter to exit from editing

```
2 S T   R O W   L A B E L
V a c u u m   P a c k i n g
```

mode; nothing will flash. Press the DOWN arrow to proceed to the next step.
Press the RIGHT arrow; the first letter will start flashing. Use the UP and DOWN

4.3.7 Language

```
L A N G U A G E
E n g l i s h
```

Press the RIGHT arrow, to enter the LANGUAGE menu. The word English will start flashing. Use the arrows UP and DOWN to scroll through the languages in the system to select the desired language.

4.3.8 Vacuum sensor calibration

```
C A L I B R A T I O N   S E N S
C l o s e   l i d
```

The vacuum sensor calibration will start as soon as the hood is closed.
The hood opens when the calibration cycle has finished.

4.3.9 Reset WiFi

```
W I F I   R E S E T
N O
```

Press the RIGHT arrow The word **NO** will start flashing. Use the arrows UP and DOWN to select **YES.** Press the LEFT arrow or wait 5 seconds to confirm

4.3.10 Date and time setting

```
D A T E   A N D   T I M E
2 5 - 0 6 - 2 0 1 8   1 3 : 3 5
```

Press the RIGHT arrow. The first number will start flashing.
Use the UP and DOWN arrows to edit the numbers. Press the RIGHT arrow to move to the next number. Use the LEFT arrow to return the previous numbers and edit them if necessary. To confirm and exit, wait 5 seconds or press the LEFT arrow to

4.3.11 Beeper tone setting

```
B E E P E R   T O N E
H i g h
```

Press the RIGHT arrow; the set value (High) will start flashing. Use the UP and DOWN arrows to select the preferred value from High, Medium, Low or Off. To confirm and exit, wait 5 seconds or press the LEFT arrow to move until nothing is flashing.

4.3 User menu

Press the ON key and hold it down for 3 seconds to enter the user menu.
Use the arrow keys to display the list of machine functions with values that can be

ON-OFF	RIGHT arrow	LEFT arrow	UP arrow	DOWN arrow

set or edited.

```
OIL HEATING CYCL
Close black cap
```

4.3.1 Oil heating and cleaning

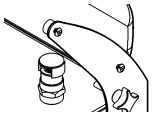

The text “Close black cap and press ON key” scrolls on the second line of the display. Follow the instructions.
The machine will start the oil heating process to bring it to the preset temperature of about 50 °C.
Pressing the ON-OFF key will stop the cycle.

```
PRINTER
Activated
```

4.3.2 Printer setting

The second line of the display shows the text “Activated” continuously. Press the RIGHT arrow; the text will start flashing. Press the DOWN arrow to de-activate the

```
GAS FLUSH
Activated
```

4.3.3 Inert gas setting (where provided)

The second line of the display shows the text “Activated” continuously.

Press the RIGHT arrow; the text will start flashing.
Press the DOWN arrow to deactivate the gas.
Press the LEFT arrow or wait 5 seconds to confirm the change.
Press the DOWN arrow to proceed to the next function.

```
LABEL COUNTER
Activated 1/0000
```

4.3.4 Label counter

The second line of the display shows the text “Activated” continuously. Press the RIGHT arrow; the text will start flashing. Press the DOWN arrow to deactivate the counter. Press the LEFT arrow or wait 5 seconds to confirm the change.
Press the RIGHT arrow twice; 1/0000 will start flashing.
Use the UP and DOWN arrows to set the maximum number of labels to

4.3.5 Label counter reset

```
LABEL COUNTER
Reset
```

The second line of the display shows the text “Reset” continuously.
Press the RIGHT arrow; the text will start flashing. Press the LEFT arrow or wait 5 seconds to confirm the change.
The counter will be reset even if it has not reached the value set previously.
Press the DOWN arrow to proceed to the next function.

4 Using the machine

4.1 - Key to controls

1. - Main machine ON-OFF switch.
This switches the machine on and off.
It is located on the side of the machine.

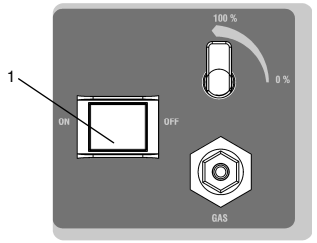

Fig. 4.1.1

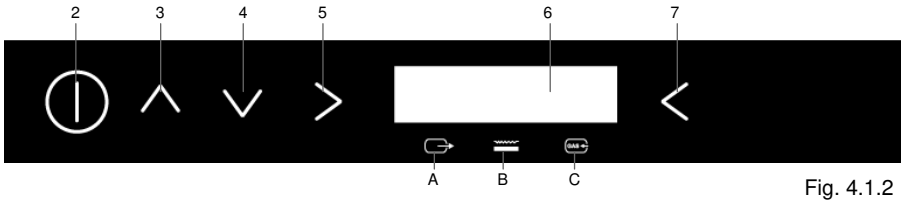

Fig. 4.1.2

2. - Board on or off.
This lights blue when the main machine switch is in the ON position. It can have three colours.
Blue light: when the machine is on but the board is disabled while setting the menus
Green light: when the machine is active and ready for use
Red light: when the machine is operating

3-4. - Scroll the software menus
- Select the stored or automatic programs.
- Increase or decrease the selected values (where permitted): percentage suction, vacuum time, sealing time, gas injection time (where provided).

5. - Opens the machine programming menu.
6. - Analogue display.
A = suction time
B = sealing time
C = gas injection time
7. - Confirms a selection.

CAUTION! Changes are stored automatically. The control system exits from the current menu five seconds after setting a value.

It is recommended to turn off the power switch, the mains switch or disconnect the plug only in case of maintenance or specific operations specified in the manual. The equipment does not need to be turned off after each use, it automatically switches to stand by mode and energy saving mode without removing the power supply. When the equipment remains connected to the power source, all the control functions are active and this guarantees better functionality and longer life.

English

4.2 First power-up, installation settings

CAUTION! All the functions and settings described below are MANDATORY. They must be carried out with the machine powered (main switch ref. 1 in fig. 4.1.1. in the ON position) and the board off. The board on key light is blue and the display shows the HW version and FW version.

```
XXXXX   XXXX
HW  4.0  FW  3.0
```

If the board is on, press ON key before carrying out the following operations.

4.2.1 MENU language setting

```
LANGUAGE
English
```

A few seconds after switching on the machine, the display shows: English is set by default.

Press the RIGHT arrow, to enter the LANGUAGE menu. The word English will start flashing.

Use the arrows UP and DOWN to scroll through the languages in the system to select the desired language.

Press the LEFT arrow, to store the change and proceed with the next settings.

4.2.2 Use type setting

```
Choose  product
usage
```

Select the packaged product type so that the software can calculate the filter change and oil change cycle times. For a few seconds the display shows

Then the display shows a list of products.

The

```
PRODUCT
Dry          YES-NO
```

```
PRODUCT
Powder       YES-NO
```

```
PRODUCT
Liquid       YES-NO
```

```
PRODUCT
Hot          YES-NO
```

selected text flashes. Use the RIGHT arrow to select YES or NO

Use the DOWN arrow to confirm the choice and proceed to the next product.

Once the product type of packaged has been selected, the filter change and oil change cycle times are calculated as follows:

	cycles to OIL change	h of use to FILTER change
S	7000	500
S+L	3000	300
S+C	2000	200
S+P	2000	100
S+L+P	2000	100
S+C+P	2000	100
S+L+C+P	2000	100
C	1000	200
C+L	1500	200
C+P	1000	100
S+L+C	1500	200
L	2000	300
L+P	2000	100
L+P+C	1000	100
P	1000	50

4.2.3 Vacuum sensor calibration

After setting the packaged products with the down arrow, the display shows:

```
CALIBRATION  SENS
Close  lid
```

The vacuum sensor calibration will start as soon as the hood is closed.
This process serves to align the sensor with the pressure at the place of installation. The hood opens when the calibration cycle has finished.
It is advisable to repeat the procedure if there is a power failure or the calibration cycles is interrupted.

NOTE: The machine has a very accurate “relative pressure” sensor, allowing it to manage the optimal operating time automatically without the need for trials or manual settings.
The relative pressure is the difference between the local atmospheric pressure and the desired final vacuum pressure (which can be selected from 1, 5, or 10 Mb).
The relative pressure depends on the atmospheric pressure at the place where the machine is installed, and may differ from that where the machine was manufactured and tested (20 m a.s.l. with an average pressure of 1020 Mb).
The pressure decreases significantly with an increase in altitude and the sensor may have difficulty in making measurements, which will affect the percentage vacuum shown on the display. The machine operation does not change, the pump is not affected in any way, and the actual pressure in the chamber will be the same or lower than that obtained in the manufacturing site for the same operating time.
However, it does create the following problem: even when the chamber has reached the requested vacuum, the display continues to show a lower vacuum level, and so the pump will continue to operate continuously.
A sensor calibration program has been provided to realign the sensor with the new pressure condition in the place of installation due to the different altitude and pressure from those at the manufacturing site.

4.2.4 Oil heating

Once the sensor calibration cycle has finished, the machine automatically proceeds to the oil heating process.

```
OIL  HEATING  CYCL
Close  black  cap
```

The text “Close black cap and press ON button” scrolls on the second line of the display. Follow the instructions.

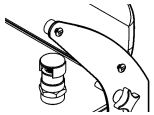

The machine will start the oil heating process to bring it to the preset temperature of about 60 – 65 °C.
Once the oil heating process has finished, the machine is in the best operating conditions.

```
READY  FOR  USE
      Thanks
```

After a few seconds, the display shows:

```
AUTOMATIC  SENSOR
100%  5.0  7.5  Sec
```


English