Form No. 3445-301 Rev C

TORO®

Count on it.

Operator's Manual

# Revolution™ 60V Hedge Trimmer

**Model No. 66120T—Serial No. 323000001 and Up**

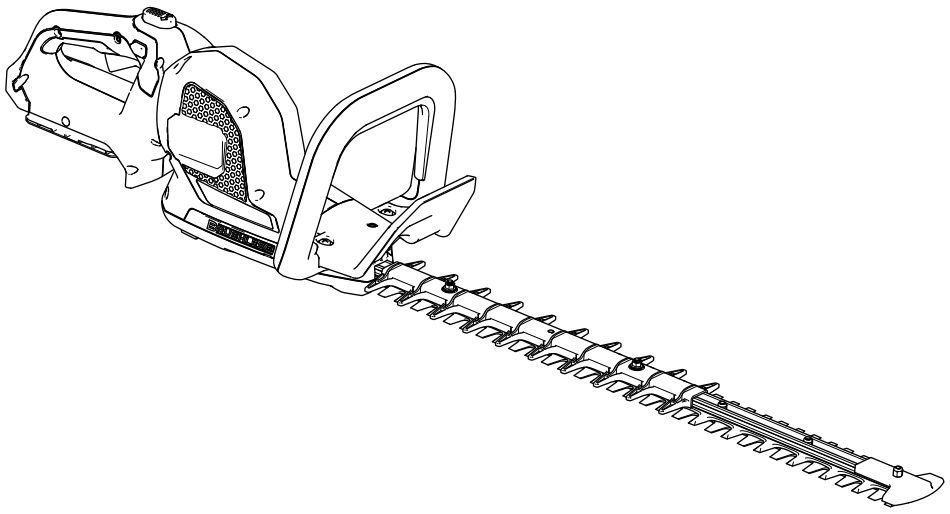

Register at www.Toro.com.
Original Instructions (EN)

*3445-301*

**For assistance, please see www.Toro.com/support for instructional videos or contact 1-888-384-9939 before returning this product.**

**⚠ WARNING**

**CALIFORNIA**
**Proposition 65 Warning**

**The power cord on this product contains lead, a chemical known to the State of California to cause birth defects or other reproductive harm. Wash hands after handling.**

**Use of this product may cause exposure to chemicals known to the State of California to cause cancer, birth defects, or other reproductive harm.**

# Introduction

This trimmer is intended to be used by homeowners and professional operators. It is designed to maintain bushes and hedges. It is designed to use Toro 60V lithium-ion battery packs. These battery packs are designed to be charged only by Toro 60V lithium-ion battery chargers. Using these products for purposes other than their intended use could prove dangerous to you and bystanders.

**Model 66120T does not include a battery or a charger.**

Read this information carefully to learn how to operate and maintain your product properly and to avoid injury and product damage. You are responsible for operating the product properly and safely.

Visit www.Toro.com for more information, including safety tips, training materials, accessory information, help finding a dealer, or to register your product.

Whenever you need service, genuine Toro parts, or additional information, contact an Authorized Service Dealer or Toro Customer Service and have the model and serial numbers of your product ready. Figure 1 identifies the location of the model and serial numbers on the product. Write the numbers in the space provided.

***Important:*** **With your mobile device, you can scan the QR code (if equipped) on the serial number plate to access warranty, parts, and other product information.**

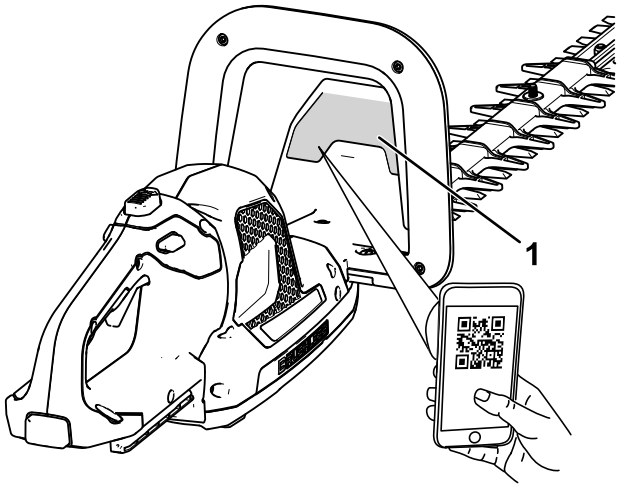


g365004

**Figure 1**

1. Model number, serial number, and QR code location

**Model No.** _____

**Serial No.** _____

© 2022—The Toro® Company
8111 Lyndale Avenue South
Bloomington, MN 55420



Contact us at www.Toro.com.
Printed in China
All Rights Reserved

# Safety-Alert Symbol

The safety-alert symbol (Figure 2) shown in this manual and on the machine identifies important safety messages that you must follow to prevent accidents.



g000502

**Figure 2**
Safety-alert symbol

---

The safety-alert symbol appears above information that alerts you to unsafe actions or situations and is followed by the word **DANGER**, **WARNING**, or **CAUTION**.

**DANGER** indicates an imminently hazardous situation which, if not avoided, **will** result in death or serious injury.

**WARNING** indicates a potentially hazardous situation which, if not avoided, **could** result in death or serious injury.

**CAUTION** indicates a potentially hazardous situation which, if not avoided, **may** result in minor or moderate injury.

This manual uses two other words to highlight information. **Important** calls attention to special mechanical information and **Note** emphasizes general information worthy of special attention.

# Safety

**⚠ WARNING**

**Read all safety warnings, instructions, illustrations and specifications provided with this power tool.**

***Failure to follow the warnings and instructions may result in electric shock, fire and/or serious injury.***

**Save all warnings and instructions for future reference.**

*The term "power tool" in the warnings refers to your mains-operated (corded) power tool or battery-operated (cordless) power tool.*

# IMPORTANT SAFETY INSTRUCTIONS

## I. Work area safety

1. **Keep work area clean and well lit.** *Cluttered or dark areas invite accidents.*
2. **Do not operate power tools in explosive atmospheres, such as in the presence of flammable liquids, gases or dust.** *Power tools create sparks which may ignite the dust or fumes.*
3. **Keep children and bystanders away while operating a power tool.** *Distractions can cause you to lose control.*

## II. Electrical safety

1. **Power tool plugs must match the outlet. Never modify the plug in any way. Do not use any adapter plugs with earthed (grounded) power tools.** *Unmodified plugs and matching outlets will reduce risk of electric shock.*
2. **Avoid body contact with earthed or grounded surfaces, such as pipes, radiators, ranges and refrigerators.** *There is an increased risk of electric shock if your body is earthed or grounded.*
3. **Do not expose power tools to rain or wet conditions.** *Water entering a power tool will increase the risk of electric shock.*
4. **Do not abuse the cord. Never use the cord for carrying, pulling or unplugging the power tool. Keep cord away from heat, oil, sharp edges or moving parts.** *Damaged or entangled cords increase the risk of electric shock.*
5. **When operating a power tool outdoors, use an extension cord suitable for outdoor use.**

*Use of a cord suitable for outdoor use reduces the risk of electric shock.*

6. **If operating a power tool in a damp location is unavoidable, use a ground fault circuit interrupter (GFCI) protected supply.** *Use of a GFCI reduces the risk of electric shock.*

## III. Personal safety

1. **Stay alert, watch what you are doing and use common sense when operating a power tool. Do not use a power tool while you are tired or under the influence of drugs, alcohol or medication.** *A moment of inattention while operating power tools may result in serious personal injury.*
2. **Use personal protective equipment. Always wear eye protection.** *Protective equipment such as a dust mask, non-skid safety shoes, hard hat or hearing protection used for appropriate conditions will reduce personal injuries.*
3. **Prevent unintentional starting. Ensure the switch is in the OFF-position before connecting to power source and/or battery pack, picking up or carrying the tool.** *Carrying power tools with your finger on the switch or energizing power tools that have the switch on invites accidents.*
4. **Remove any adjusting key or wrench before turning the power tool on.** *A wrench or a key left attached to a rotating part of the power tool may result in personal injury.*
5. **Do not overreach. Keep proper footing and balance at all times.** *This enables better control of the power tool in unexpected situations.*
6. **Dress properly. Do not wear loose clothing or jewellery. Keep your hair and clothing away from moving parts.** *Loose clothes, jewelry or long hair can be caught in moving parts.*
7. **If devices are provided for the connection of dust extraction and collection facilities, ensure these are connected and properly used.** *Use of dust collection can reduce dust-related hazards.*
8. **Do not let familiarity gained from frequent use of tools allow you to become complacent and ignore tool safety principles.** *A careless action can cause severe injury within a fraction of a second.*

## IV. Power tool use and care

1. **Do not force the power tool. Use the correct power tool for your application.** *The correct power tool will do the job better and safer at the rate for which it was designed.*
2. **Do not use the power tool if the switch does not turn it on and off.** *Any power tool that cannot be controlled with the switch is dangerous and must be repaired.*
3. **Disconnect the plug from the power source and/or remove the battery pack, if detachable, from the power tool before making any adjustments, changing accessories, or storing power tools.** *Such preventive safety measures reduce the risk of starting the power tool accidentally.*
4. **Store idle power tools out of the reach of children and do not allow persons unfamiliar with the power tool or these instructions to operate the power tool.** *Power tools are dangerous in the hands of untrained users.*
5. **Maintain power tools and accessories. Check for misalignment or binding of moving parts, breakage of parts and any other condition that may affect the power tool's operation. If damaged, have the power tool repaired before use.** *Many accidents are caused by poorly maintained power tools.*
6. **Keep cutting tools sharp and clean.** *Properly maintained cutting tools with sharp cutting edges are less likely to bind and are easier to control.*
7. **Use the power tool, accessories and tool bits etc. in accordance with these instructions, taking into account the working conditions and the work to be performed.** *Use of the power tool for operations different from those intended could result in a hazardous situation.*
8. **Keep handles and grasping surfaces dry, clean and free from oil and grease.** *Slippery handles and grasping surfaces do not allow for safe handling and control of the tool in unexpected situations.*

## V. Battery tool use and care

1. **Recharge only with the charger specified by the manufacturer.** *A charger that is suitable for one type of battery pack may create a risk of fire when used with another battery pack.*
2. **Use power tools only with specifically designated battery packs.** *Use of any other battery packs may create a risk of injury and fire.*
3. **When battery pack is not in use, keep it away from other metal objects, like paper clips, coins, keys, nails, screws or other small metal objects, that can make a connection from one terminal to another.** *Shorting the battery terminals together may cause burns or a fire.*
4. **Under abusive conditions, liquid may be ejected from the battery; avoid contact. If contact accidentally occurs, flush with water. If liquid contacts eyes, additionally seek medical help.** *Liquid ejected from the battery may cause irritation or burns.*
5. **Do not use a battery pack or tool that is damaged or modified.** *Damaged or modified batteries may exhibit unpredictable behavior resulting in fire, explosion or risk of injury.*
6. **Do not expose a battery pack or tool to fire or excessive temperature.** *Exposure to fire or temperature above 130 °C (265 °F) may cause explosion.*
7. **Follow all charging instructions and do not charge the battery pack or tool outside the temperature range specified in the instructions.** *Charging improperly or at temperatures outside the specified range may damage the battery and increase the risk of fire.*

## VI. Service

1. **Have your power tool serviced by a qualified repair person using only identical replacement parts.** *This will ensure that the safety of the power tool is maintained.*
2. **Never service damaged battery packs.** *Service of battery packs should only be performed by the manufacturer or authorized service providers.*

## VII. Hedge trimmer safety warnings

1. **Keep all parts of the body away from the blade. Do not remove cut material or hold material to be cut when blades are moving.** *Blades continue to move after the switch is turned off. A moment of inattention while operating the hedge trimmer may result in serious personal injury.*
2. **Carry the hedge trimmer by the handle with the blade stopped and taking care not to operate any power switch.** *Proper carrying of the hedge trimmer will decrease the risk of inadvertent starting and resultant personal injury from the blades.*
3. **When transporting or storing the hedge trimmer, always fit the blade cover.** *Proper handling of the hedge trimmer will decrease the risk of personal injury from the blades.*
4. **When clearing jammed material or servicing the unit, make sure all power switches are off and the battery pack is removed or disconnected.** *Unexpected actuation of the hedge trimmer while clearing jammed material or servicing may result in serious personal injury.*
5. **Hold the hedge trimmer by insulated gripping surfaces only, because the blade may contact hidden wiring or its own cord.** *Blades contacting a "live" wire may make exposed metal parts of the hedge trimmer "live" and could give the operator an electric shock.*
6. **Keep all power cords and cables away from cutting area.** *Power cords or cables may be hidden in hedges or bushes and can be accidentally cut by the blade.*
7. **Do not use the hedge trimmer in bad weather conditions, especially when there is a risk of lightning.** *This decreases the risk of being struck by lightning.*

# SAVE THESE INSTRUCTIONS

# Safety and Instructional Decals

Safety decals and instructions are easily visible to the operator and are located near any area of potential danger. Replace any decal that is damaged or missing.

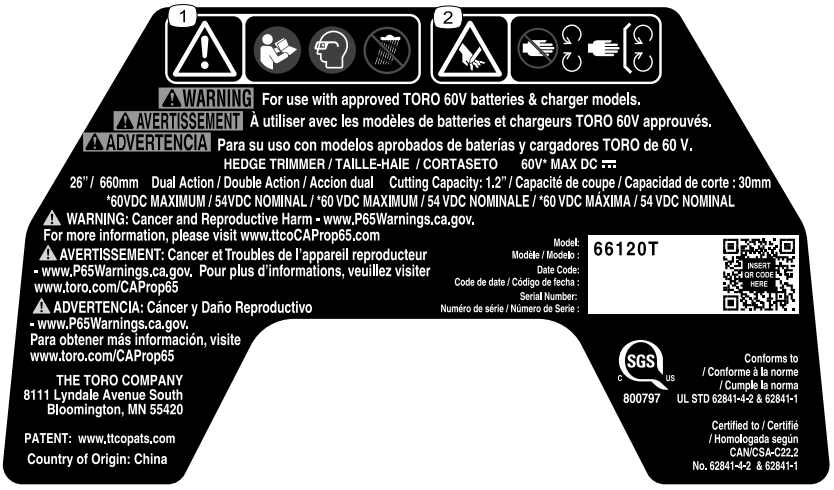


decal145-2303

**145-2303**

1. Warning—read the *Operator's Manual*; wear eye protection; do not expose to rain.
2. Cutting/dismemberment hazard of hand—stay away from moving parts; keep all guards and shields in place.

# Product Overview

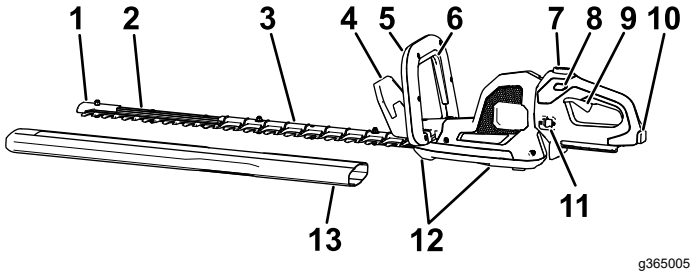


**Figure 3**

Left side of the trimmer shown.

1. Tip guard
2. Blades
3. Blade guard
4. Hand guard
5. Auxiliary handle
6. Auxiliary-handle switch
7. Handle-rotation button
8. Lock switch
9. Trigger
10. Battery latch
11. Speed/Anti-jam switch
12. Vents
13. Protective cover

# Specifications

| | |
|---|---|
| **Model** | 66120T |
| **Rated Voltage** | 60V DC maximum, 54 VDC nominal |
| **Overall Length** | 113 cm (44-1/2 inches) |
| **Weight (without battery)** | 4.1 kg (9.2 lbs) |
| **Cutting Length** | 660 mm (26 inches) |
| **Cutting Width** | 30 mm (1.2 inches) |
| **Charger Type** | Toro 60V lithium-ion chargers |
| **Battery Type** | Toro 60V lithum-ion batteries |

### Appropriate Temperature Ranges

| | |
|---|---|
| Charge/store the battery pack at | 5°C (41°F) to 40°C (104°F)* |
| Use the battery pack at | -30°C (-22°F) to 49°C (120°F)* |
| Use the machine at | 0°C (32°F) to 49°C (120°F)* |

*Charging time will increase if you do not charge the battery pack within this range.

Store the machine, battery pack, and battery charger in an enclosed clean, dry area.

# Attachments/Accessories

A selection of Toro approved attachments and accessories is available for use with the machine to enhance and expand its capabilities. Contact your Authorized Service Dealer or authorized Toro distributor or go to www.Toro.com for a list of all approved attachments and accessories.

To ensure optimum performance and continued safety certification of the machine, use only genuine Toro replacement parts and accessories. Replacement parts and accessories made by other manufacturers could be dangerous.

# Operation

## Starting the Hedge Trimmer

1. Remove the protective cover from the blades (Figure 4).

**⚠ WARNING**

**The hedge trimmer blades can cause cuts or amputation.**

**Be careful when handling the hedge trimmer with the protective cover removed.**

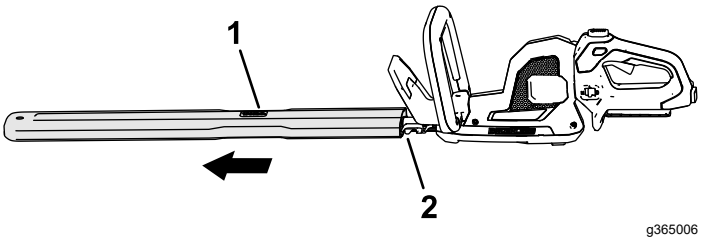


g365006

**Figure 4**

1. Protective cover
2. Blades

2. Ensure that the vents on the hedge trimmer are clear of any dust and debris (Figure 6).

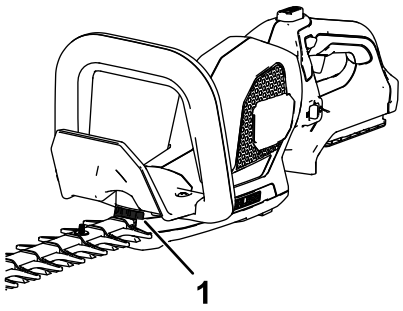


g378082

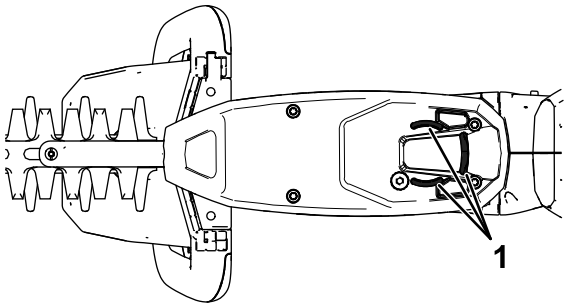


g378084

**Figure 5**

1. Hedge trimmer venting areas

3. Align the cavity of the battery pack with the tongue in the handle housing, grasp the handle, and push the battery pack into the handle until the latch locks into place (Figure 6).

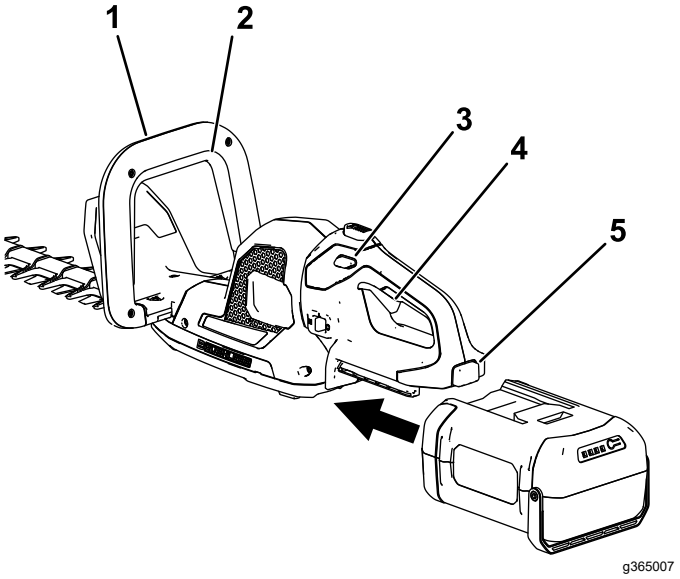


g365007

**Figure 6**

1. Auxiliary handle
2. Auxiliary-handle switch
3. Lock switch
4. Trigger
5. Battery latch

4. Place 1 hand on the trigger handle. Place the other hand on the auxiliary handle (Figure 6).
5. Press the lock switch and then squeeze the trigger switch while engaging the auxiliary-handle switch to turn on the hedge trimmer (Figure 6).

   The trimmer stays on as long as the auxiliary-handle switch is engaged and the trigger is squeezed. You may release the lock switch once the hedge trimmer is running (Figure 6).

# Rotating the Hedge Trimmer Handle

1. Press and hold the rotational lock button (A of Figure 7).
2. Rotate the handle 90° to the right or left depending on desired cutting direction, then release the rotational lock button to lock the handle in the desired position (B of Figure 7).

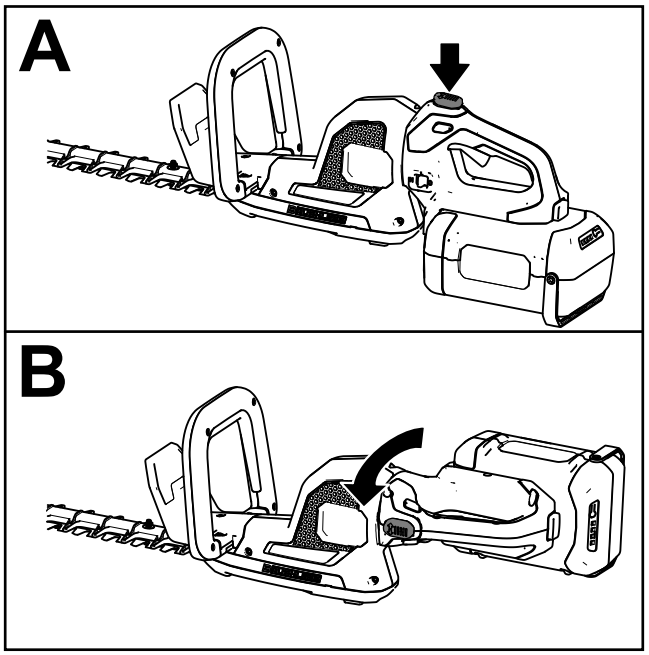


g365008

**Figure 7**

# Using the Speed/Anti-jam Switch

The hedge trimmer has multiple speed settings; move the switch forward to the H position for high-speed. Move the switch to the center position for low-speed cutting (Figure 8).

The switch also includes an anti-jam setting; move the switch back to temporarily reverse the motion of the blades to free a jam (Figure 8).

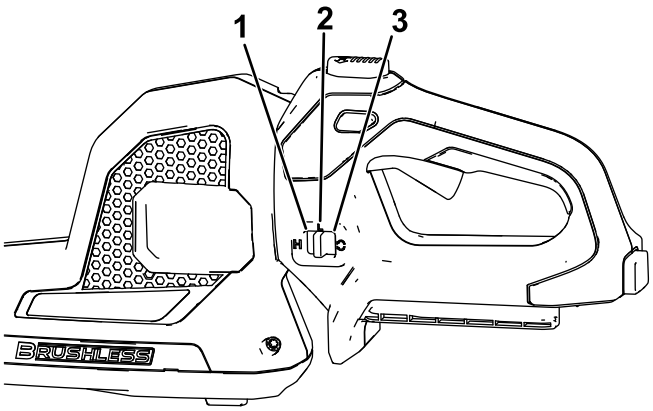


g365021

**Figure 8**

1. High speed position
2. Low speed position
3. Anti-jam position

# Shutting Off the Hedge Trimmer

To shut off the hedge trimmer, release the trigger or the auxiliary-handle switch (Figure 6). Allow at least 5 seconds for the cutting blade to stop moving.

Whenever you are not using the trimmer or are transporting the trimmer to or from the work area, remove the battery pack and install the protective cover over the blades.

# Removing the Battery Pack

Press the battery latch on the tool to release the battery pack and slide the battery pack out of the tool (Figure 9).

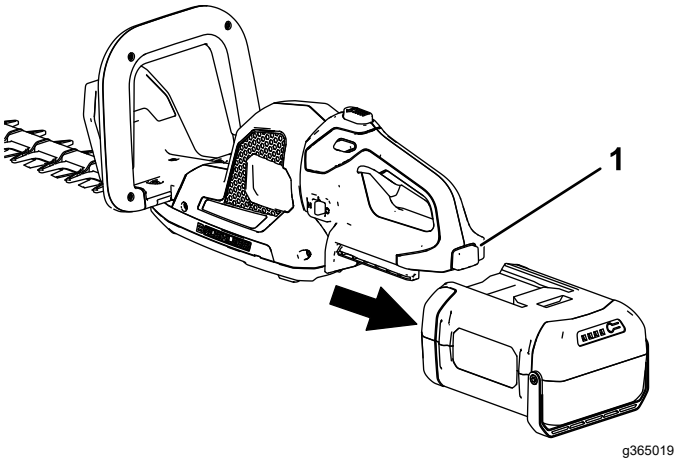


g365019

**Figure 9**

1. Battery latch

# Operating Tips

- Use the power tool for cutting in either direction in a slow, sweeping action.
- When trimming new growth, use a wide sweeping action so that the stems are fed directly into the cutting blade.
- Use a different tool to trim stems that are too large for the trimmer.
- If desired, you can use a string to help cut your hedge level. Decide how high you want the hedge. Stretch a piece of string along the hedge at the desired height as a guideline. Trim the hedge just above the string guideline.

# Maintenance

After each use of the trimmer, complete the following:

1. Remove the battery pack from the trimmer before maintaining or cleaning.
2. Wipe the trimmer clean with a damp cloth any time there is an accumulation of debris. Do not hose the trimmer down or submerge it in water.

**⚠ WARNING**

**The hedge trimmer blades can cause cuts or amputation.**

**Be careful when handling the hedge trimmer with the protective cover removed.**

3. Inspect the machine, check and tighten all fasteners. If any part is damaged or lost, repair or replace it.

   ***Important:*** **Use only the manufacturer's recommended replacement parts and accessories.**

   **Have the product repaired only by an Authorized Service Dealer.**

4. Brush debris away from air intake vents and exhaust on motor housing to prevent the motor from overheating.

# Lubricating the Trimmer

## Lubricating the Blades

**Service Interval:** After each use

**⚠ WARNING**

**The hedge trimmer blades can cause cuts or amputation.**

**Be careful when handling the hedge trimmer with the protective cover removed.**

1. Shut off the trimmer, remove the battery pack, and place the trimmer on a flat surface.
2. Clean dirt and debris from the hedge trimmer, using a brush or a damp cloth with a mild detergent.
3. Apply light weight machine oil (such as #10) along the edge of the top blades (Figure 10).

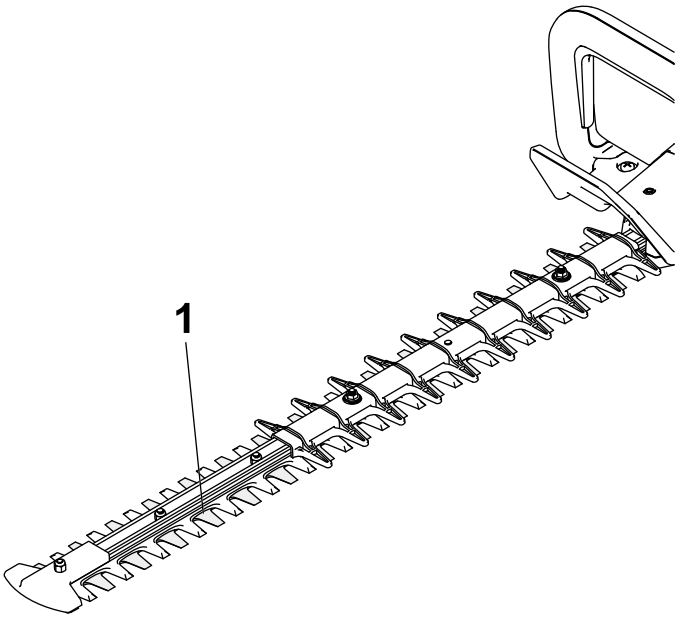


**Figure 10**

1. Apply machine oil to the top edge of the blades.

## Lubricating the Gearbox

**Service Interval:** Every 25 hours or monthly, whichever comes first

1. Shut off the trimmer, remove the battery pack, and install the protective cover over the blades.
2. Turn the trimmer over so the gearbox is facing up.
3. Remove the gearbox hex-socket head plug (Figure 11).

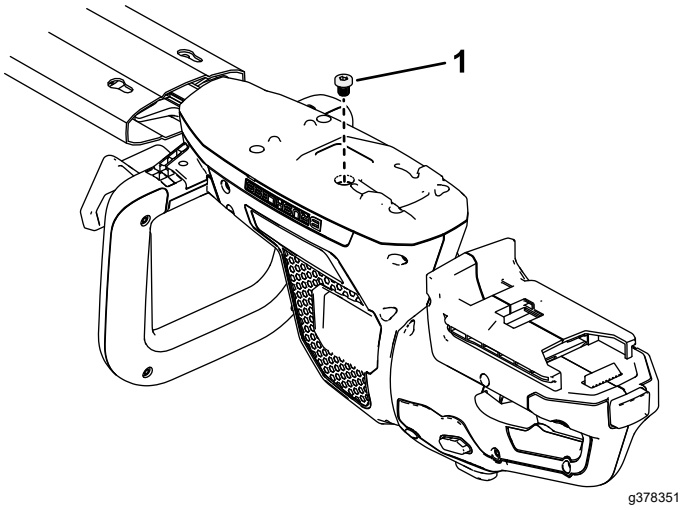


**Figure 11**

1. Gearbox plug

4. Apply a small amount of grease into the gearbox using a grease gun.

   **Note:** Use No. 2 lithium grease.
5. Install the gearbox plug.

# Storage

***Important:*** **Store the tool, battery pack, and charger only in temperatures that are within the appropriate range; refer to Specifications (page 7).**

***Important:*** **If you are storing the battery pack for the off-season, remove the battery pack from the tool and charge the battery pack until 2 or 3 LED indicators turn green on the battery. Do not store a fully charged or fully depleted battery. When you are ready to use the tool again, charge the battery pack until the left indicator light turns green on the charger or all 4 LED indicators turn green on the battery.**

- Disconnect the product from the power supply (i.e., remove the plug from the power supply or the battery pack) and check for damage after use.
- Clean all foreign material from the product.
- Do not store the tool with the battery pack installed.
- When not in use, store the tool, battery pack, and battery charger out of the reach of children.
- Keep the tool, battery pack, and battery charger away from corrosive agents, such as garden chemicals and de-icing salts.
- To reduce the risk of serious personal injury, do not store the battery pack outside or in vehicles.
- Store the tool, battery pack, and battery charger in an enclosed clean, dry area.

# Troubleshooting

Perform only the steps described in these instructions. All further inspection, maintenance, and repair work must be performed by an authorized service center or a similarly qualified specialist if you cannot solve the problem yourself.

Always remove the battery from the tool when troubleshooting, inspecting, maintaining, or cleaning the tool.

| Problem | Possible Cause | Corrective Action |
|---|---|---|
| The tool does not run or does not run continuously. | 1. The battery is not fully installed in the tool.<br>2. The battery pack is not charged.<br>3. The battery pack is over or under the appropriate temperature range.<br>4. There is moisture on the leads of the battery pack.<br>5. The battery pack is damaged.<br>6. There is another electrical problem with the tool.<br>7. Both the auxiliary handle switch and the trigger are not pressed. | 1. Remove and then replace the battery into the tool, making sure that it is fully installed and latched.<br>2. Remove the battery pack from the tool and charge it.<br>3. Move the battery pack to a place where it is dry and the temperature is between 5°C (41°F) and 40°C (104°F).<br>4. Allow the battery pack to dry or wipe it dry.<br>5. Replace the battery pack.<br>6. Contact an Authorized Service Dealer.<br>7. Press both the trigger and the auxiliary handle switch simultaneously. |
| The tool does not reach full power. | 1. The speed switch is in the low speed or anti-jam position.<br>2. The battery pack charge capacity is too low.<br>3. The air vents are blocked. | 1. Turn the speed switch to the high speed position.<br>2. Remove the battery pack from the tool and fully charge the battery pack.<br>3. Clean the air vents. |
| The gearbox is hot. | 1. The air vents are blocked.<br>2. The gearbox is not being lubricated properly. | 1. Clean the air vents.<br>2. Lubricate the gearbox. |
| The tool is producing excessive vibration or noise. | 1. The blades are dull or damaged.<br>2. The machine is not being lubricated properly. | 1. Contact an Authorized Service Dealer.<br>2. Lubricate the blades and gearbox. |
| The battery pack loses charge quickly. | 1. The battery pack is over or under the appropriate temperature range.<br>2. The trimmer is overloaded | 1. Move the battery pack to a place where it is dry and the temperature is between 5°C (41°F) and 40°C (104°F).<br>2. Trim at a slower pace. |

# Notes:

# California Proposition 65 Warning Information

## What is this warning?

You may see a product for sale that has a warning label like the following:



**WARNING:** Cancer and Reproductive Harm—www.p65Warnings.ca.gov.

## What is Prop 65?

Prop 65 applies to any company operating in California, selling products in California, or manufacturing products that may be sold in or brought into California. It mandates that the Governor of California maintain and publish a list of chemicals known to cause cancer, birth defects, and/or other reproductive harm. The list, which is updated annually, includes hundreds of chemicals found in many everyday items. The purpose of Prop 65 is to inform the public about exposure to these chemicals.

Prop 65 does not ban the sale of products containing these chemicals but instead requires warnings on any product, product packaging, or literature with the product. Moreover, a Prop 65 warning does not mean that a product is in violation of any product safety standards or requirements. In fact, the California government has clarified that a Prop 65 warning "is not the same as a regulatory decision that a product is 'safe' or 'unsafe.'" Many of these chemicals have been used in everyday products for years without documented harm. For more information, go to https://oag.ca.gov/prop65/faqs-view-all.

A Prop 65 warning means that a company has either (1) evaluated the exposure and has concluded that it exceeds the "no significant risk level"; or (2) has chosen to provide a warning based on its understanding about the presence of a listed chemical without attempting to evaluate the exposure.

## Does this law apply everywhere?

Prop 65 warnings are required under California law only. These warnings are seen throughout California in a wide range of settings, including but not limited to restaurants, grocery stores, hotels, schools, and hospitals, and on a wide variety of products. Additionally, some online and mail order retailers provide Prop 65 warnings on their websites or in catalogs.

## How do the California warnings compare to federal limits?

Prop 65 standards are often more stringent than federal and international standards. There are various substances that require a Prop 65 warning at levels that are far lower than federal action limits. For example, the Prop 65 standard for warnings for lead is 0.5 µg/day, which is well below the federal and international standards.

## Why don't all similar products carry the warning?

- Products sold in California require Prop 65 labelling while similar products sold elsewhere do not.
- A company involved in a Prop 65 lawsuit reaching a settlement may be required to use Prop 65 warnings for its products, but other companies making similar products may have no such requirement.
- The enforcement of Prop 65 is inconsistent.
- Companies may elect not to provide warnings because they conclude that they are not required to do so under Prop 65; a lack of warnings for a product does not mean that the product is free of listed chemicals at similar levels.

## Why does Toro include this warning?

Toro has chosen to provide consumers with as much information as possible so that they can make informed decisions about the products they buy and use. Toro provides warnings in certain cases based on its knowledge of the presence of one or more listed chemicals without evaluating the level of exposure, as not all the listed chemicals provide exposure limit requirements. While the exposure from Toro products may be negligible or well within the "no significant risk" range, out of an abundance of caution, Toro has elected to provide the Prop 65 warnings. Moreover, if Toro does not provide these warnings, it could be sued by the State of California or by private parties seeking to enforce Prop 65 and subject to substantial penalties.




**Count on it.**