Parts:

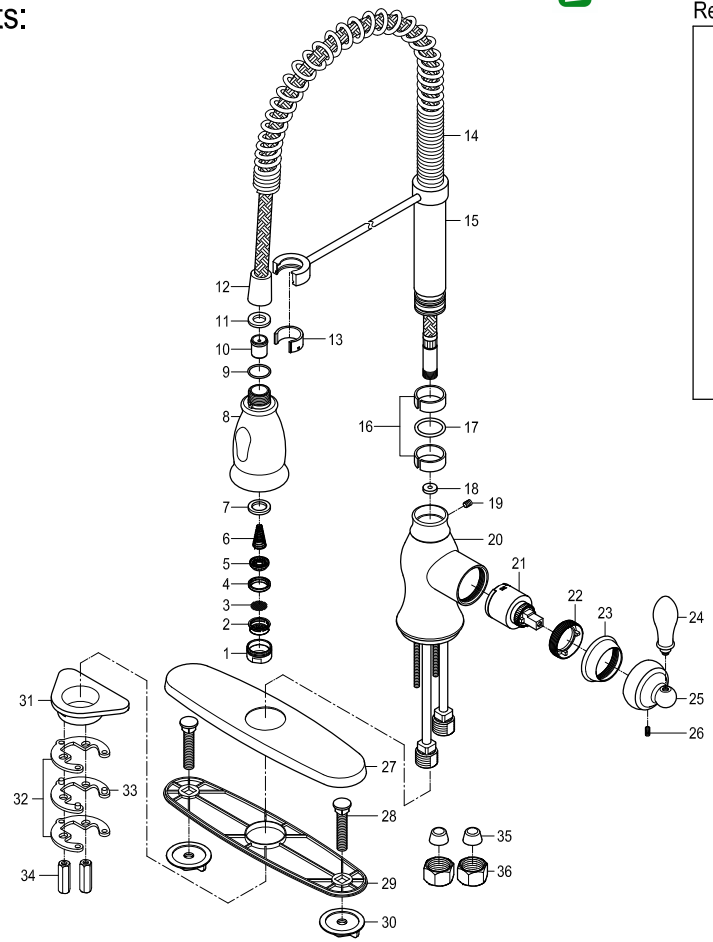

Replacement Parts:

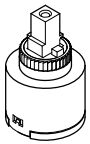

Cartridge: KSRP3891C

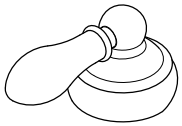

Handle: GSYH8891ACL

KINGSTON
KITCHEN & BATH

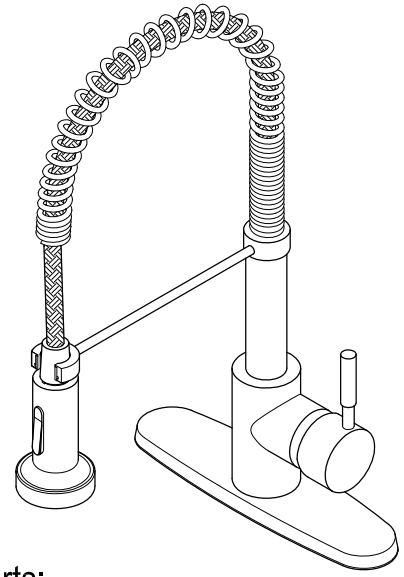

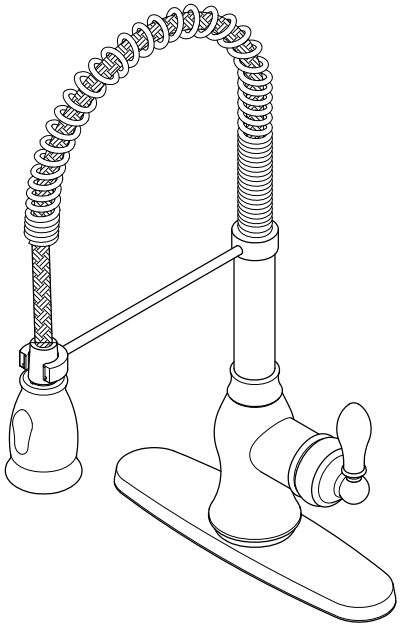

Parts:

Washer & Lock Nut	Support	Bolt & Lock Nut	Cone Washer & Coupling Nut
	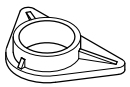	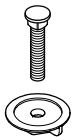	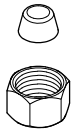
1 Pc	1 Pc	2 Pcs	2 Pcs

CARE AND MAINTENANCE OF YOUR FAUCET

Your Kingston Brass faucet has been finished to the most strict standards; however, due to the high content of minerals in the water, your finish may appear dull and tarnished after time. These are some do's and don'ts to maintain the luster on your faucet for many years to come.

DO
1. Use a silicon based caulking when installing.
2. Clean your faucet with only a mild soap and water solution.
3. Dry your faucet after using it.
4. Give it a coat of Carnauba Wax periodically.

DON'T
1. Use plumbers putty when installing the faucet.
2. Use any abrasive cleaning agents.

It may seem like a very simple and short list but it is that simple to maintain your faucet, looking shiny and new.

If your faucet is already looking somewhat dull and tarnished, before replacing it, try cleaning it with a 50/50 solution of vinegar and water, you may need to soak some rags and wrap around those stubborn areas, leave overnight and rinse completely in the morning, apply Carnauba wax once you have removed the mineral deposits.

NOTICE

Failure to follow all directions may cause leaks which may result in water damage

www.kingstonbrass.com
TOLL-FREE CUSTOMER SERVICE: 1-877-2-KBRASS
TECHNICAL SUPPORT E-mail: service@kingstonbrass.com
12775 Reservoir Street, Chino, CA 91710

KINGSTON
KITCHEN & BATH

INSTALLATION INSTRUCTIONS
Pull-Down Kitchen Faucet

Need Tools:

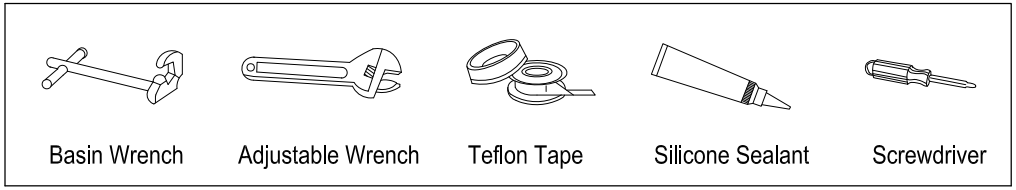

BEFORE BEGINNING INSTALLATION:

1. Flush plumbing lines to clear any debris.
2. Shut off both supply lines after flushing.

1

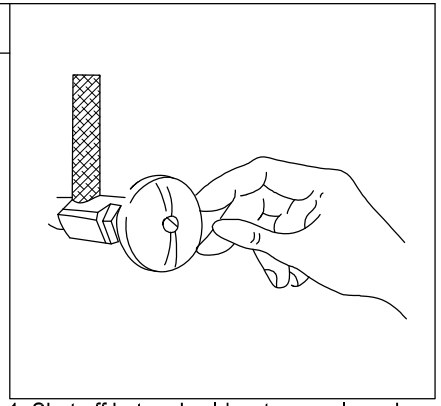

1. Shut off hot and cold water supply under sink. Plug sink drain with cloth to avoid losing small parts. Remove old faucet.

2

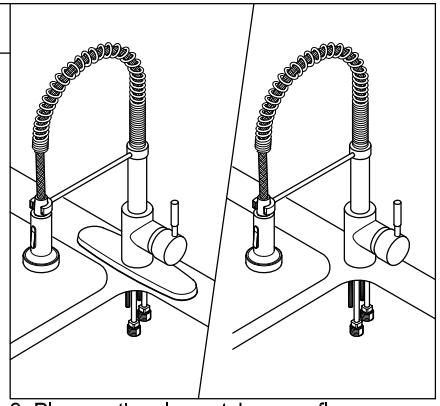

2. Place optional escutcheon or flange on bottom of new faucet before position faucet through mounting hole.

3

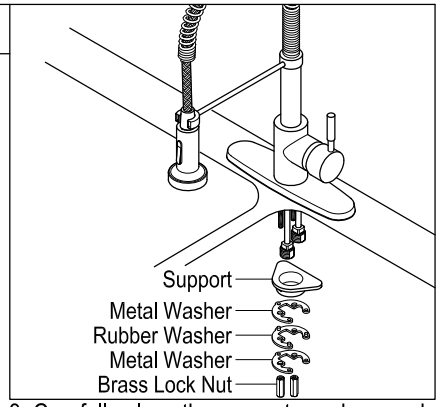

3. Carefully place the support, washers and brass lock nut into faucet shank and secure them gently, make sure faucet is in center position.

4

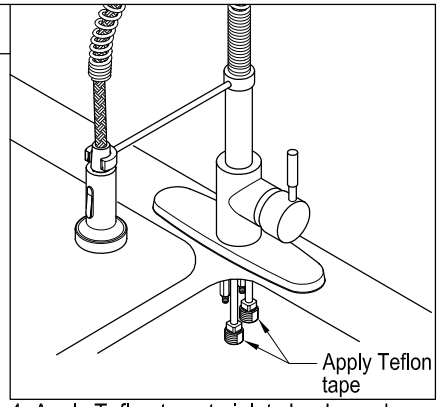

4. Apply Teflon tape to inlet shanks and connect supply lines.

5

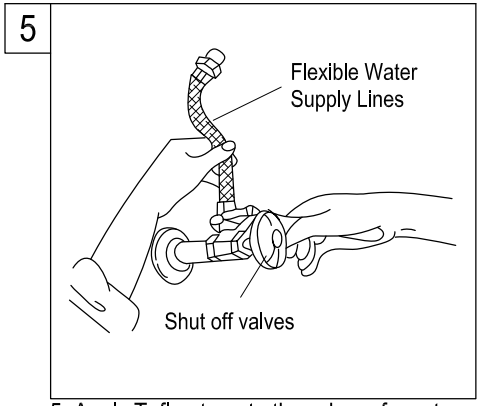

5. Apply Teflon tape to threads on faucet shank and shut off valves, connect water supply line.

6

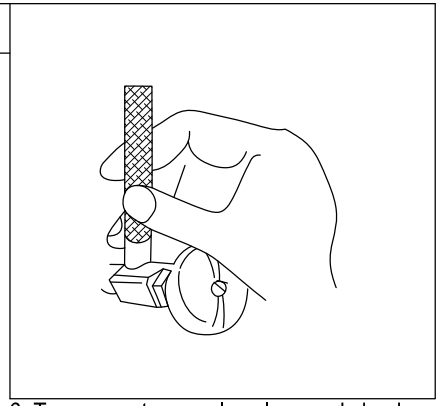

6. Turn on water supply valves and check for leaks, especially all supply line connections.

7

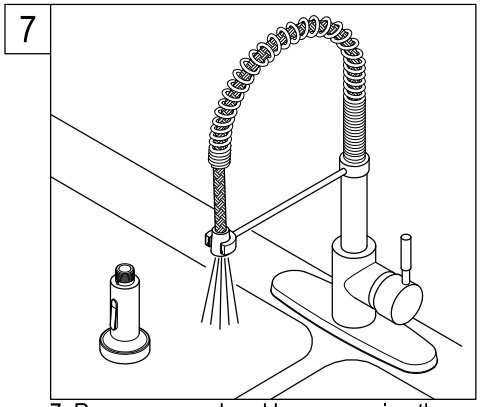

7. Remove spray head by unscrewing the sprayer in a counter clockwise direction, turn on both hot and cold valves and let water run for at least one minute, this will clear any debris left in the line.

Warning!!!

- Do not over-tighten nut during installation.
- Over-tighten may crack the valve and cause severe leak.

©2023-09-E Kingston Brass