TORO®

Operator's Manual

Ultra Buggy® 2500

Model—Serial Range

68038—410171431 and Up

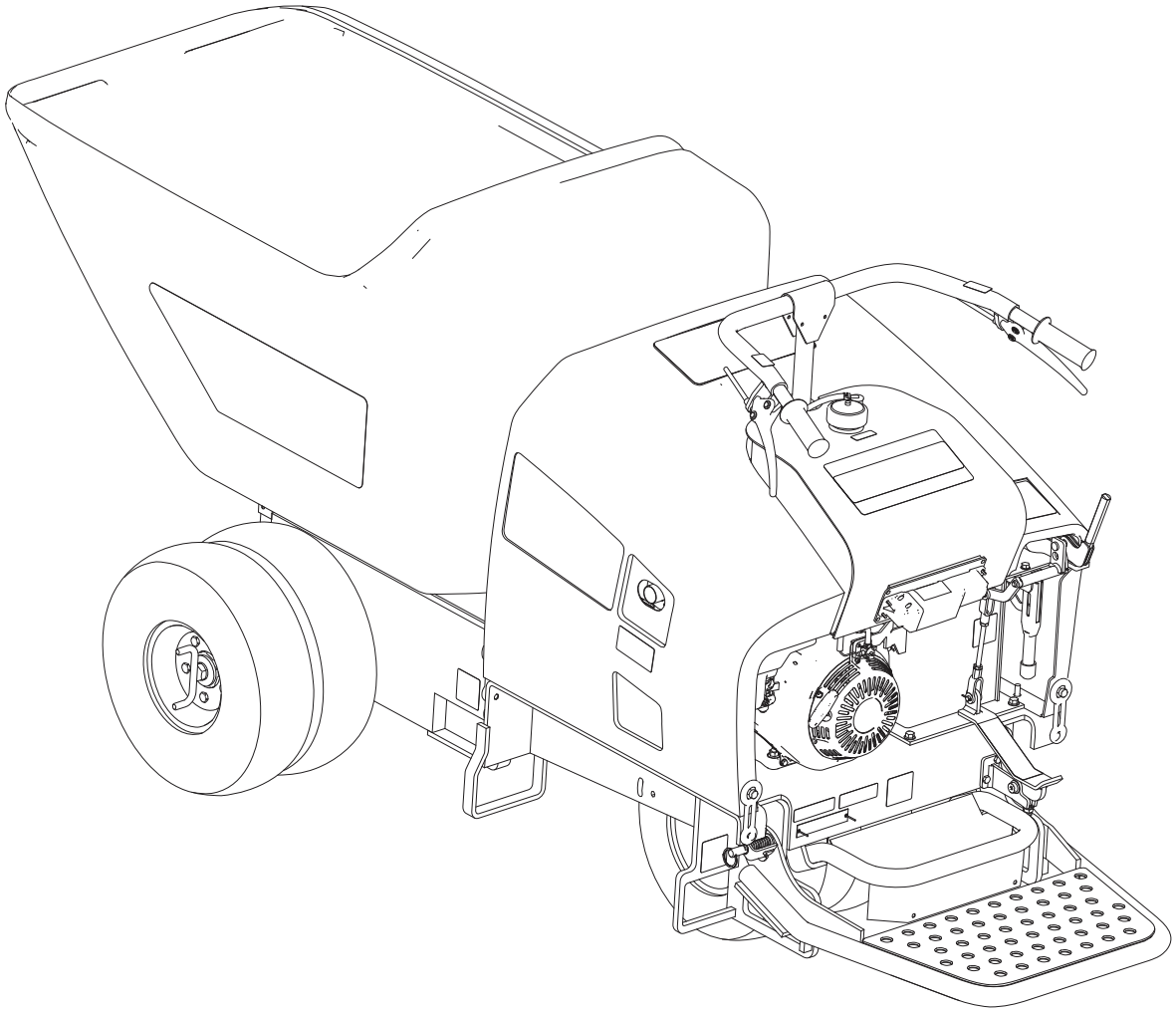

3461-467A

Original Instructions (EN)

*3461-467*A

Disclaimers and Regulatory Information

It is a violation of California Public Resource Code Section 4442 or 4443 to use or operate the engine on any forest-covered, brush-covered, or grass-covered land unless the engine is equipped with a spark arrester, as defined in Section 4442, maintained in effective working order or the engine is constructed, equipped, and maintained for the prevention of fire.

Because in some areas there are local, state, or federal regulations requiring that a spark arrester be used on the engine of this machine, a spark arrester is available as an option. If you require a spark arrester, contact your Authorized Service Dealer. Genuine Toro spark arresters are approved by the USDA Forestry Service.

The enclosed engine owner's manual is supplied for information regarding the US Environmental Protection Agency (EPA) and the California Emission Control Regulation of emission systems, maintenance, and warranty. Replacements may be ordered through the engine manufacturer.

⚠ WARNING

CALIFORNIA
Proposition 65

The engine exhaust from this product contains chemicals known to the State of California to cause cancer, birth defects, or other reproductive harm.

Battery posts, terminals, and related accessories contain lead and lead compounds, chemicals known to the State of California to cause cancer and reproductive harm. Wash hands after handling.

Use of this product may cause exposure to chemicals known to the State of California to cause cancer, birth defects, or other reproductive harm.

Table of Contents

Disclaimers and Regulatory Information 2
Chapter 1: Introduction 1–1
- Intended Use 1–1
- Getting Help 1–1
- Manual Conventions 1–2

Chapter 2: Safety 2–1
- General Safety 2–1
- Safety and Instructional Decals 2–1

Chapter 3: Product Overview 3–1
- Controls 3–1
  - Brake Pedal 3–1
  - Parking Brake 3–2
  - Drive Controls 3–2
  - Dump Controls 3–2
  - Fuel Gauge 3–3

© 2022—The Toro® Company

8111 Lyndale Ave So
Bloomington, MN 55044

Contact us at www.Toro.com

Printed in the USA

All rights reserved

Engine Controls 3–3
Specifications 3–4
Attachments/Accessories 3–5
Chapter 4: Operation 4–1
Before Operation 4–1
Before Operation Safety 4–1
Fuel 4–2
Performing Daily Maintenance 4–3
During Operation 4–3
During Operation Safety 4–3
Starting the Engine 4–5
Shutting Off the Engine 4–6
Operating the Machine 4–6
Operator Platform 4–7
Operating the Hopper 4–8
After Operation 4–9
After Operation Safety 4–9
Haul the Machine 4–9
Removing the Outer Wheels 4–13
Chapter 5: Maintenance 5–1
Maintenance Safety 5–1
Recommended Maintenance Schedule 5–2
Pre-Maintenance Procedures 5–2
Moving a Non-Functional Machine 5–2
Lifting the Machine 5–3
Removing the Cowl 5–4
Lubrication 5–4
Greasing the Machine 5–4
Engine Maintenance 5–5
Servicing the Air Cleaner 5–5
Engine Oil Service 5–6
Replacing the Spark Plug 5–8
Cleaning the Blower Housing 5–8
Fuel System Maintenance 5–9
Cleaning the Sediment Cup 5–9
Replacing the Fuel Filter 5–9
Draining the Fuel Tank 5–10
Drive System Maintenance 5–10
Checking the Transmission Neutral Position 5–10
Inspecting the Tires 5–11
Torquing the Wheel Lug Nuts 5–11
Brake Maintenance 5–12
Checking the Brake Pedal 5–12
Checking the Parking Brake 5–12
Adjusting the Parking Brake 5–12
Hydraulic System Maintenance 5–13
Hydraulic Fluid Specifications 5–13
Checking the Hydraulic Fluid 5–14
Changing the Hydraulic Fluid 5–14
Replacing the Hydraulic Filter 5–15
Checking the Hydraulic Lines 5–16
Cleaning 5–16
Removing Debris 5–16

Chapter 6: Storage 6–1
Storage Safety 6–1
Preparing the Machine for Storage Over 30 Days 6–1
Chapter 7: Troubleshooting 7–1
California Proposition 65 Warning Information

Introduction

Intended Use

This machine is intended to be used by professional, hired operators in commercial applications. This machine is a stable, reliable, and productive machine for carrying and moving materials for any job site. It is primarily designed to move concrete, mortar, gravel, dirt, or debris around job sites. Using this product for purposes other than its intended use could prove dangerous to you and bystanders.

Read this information carefully to learn how to operate and maintain your product properly and to avoid injury and product damage. You are responsible for operating the product properly and safely.

Getting Help

Visit www.Toro.com for product safety and operation training materials, accessory information, help finding a dealer, or to register your product.

Whenever you need service, genuine Toro parts, or additional information, contact an Authorized Service Dealer or Toro Customer Service and have the model and serial numbers of your product ready. These numbers are located on the serial plate on your product (1). Write the numbers in the space provided.

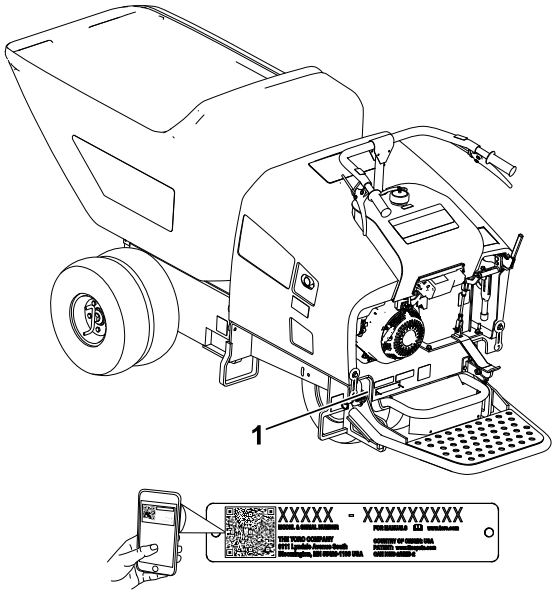

g328431

IMPORTANT

With your mobile device, you can scan the QR code on the serial number decal (if equipped) to access warranty, parts, and other product information.

Model Number:		**Serial Number:**	

Manual Conventions

This manual identifies potential hazards and has safety messages identified by the safety-alert symbol, which signals a hazard that may cause serious injury or death if you do not follow the recommended precautions.



G405934

This manual uses 2 words to highlight information. **Important** calls attention to special mechanical information and **Note** emphasizes general information worthy of special attention.

General Safety

- Read and understand the contents of this *Operator's Manual* before starting the engine.
- Do not operate the machine without all guards and other safety protective devices in place and functioning properly on the machine.
- Park the machine on a level surface, lower the hopper, shut off the engine, and remove the key (if applicable) before leaving the operating position.
- Keep your hands and feet away from moving parts. If possible, do not make adjustments with the engine running.

Improperly using or maintaining the machine can result in injury. To reduce the potential for injury, comply with these safety instructions and always pay attention to the safety-alert symbol, which means **Caution**, **Warning**, or **Danger**—personal safety instruction. Failure to comply with the instruction may result in personal injury or death.

Safety and Instructional Decals

Safety decals and instructions are easily visible to the operator and are located near any area of potential danger. Replace any decal that is damaged or missing.

Decal Part: 125-4958

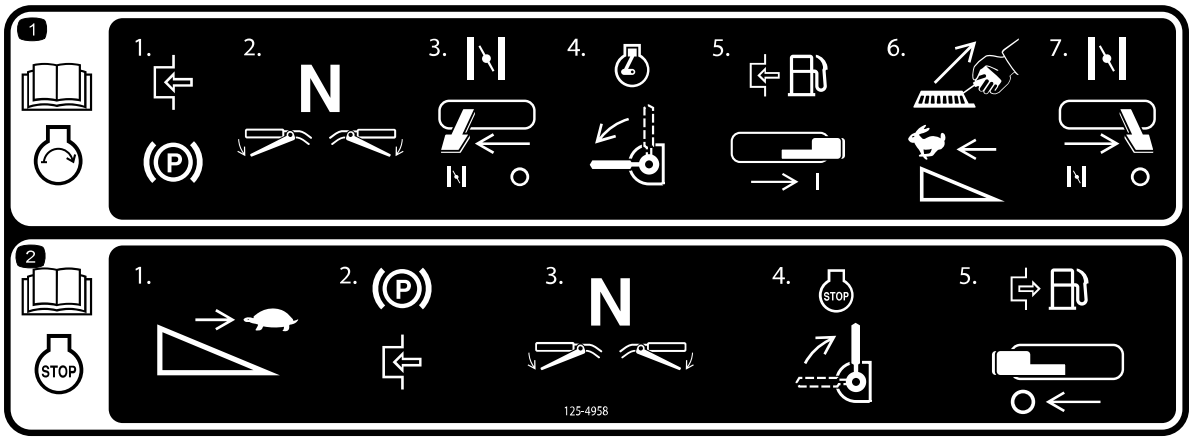

decal125-4958

1 Read the *Operator's Manual* for information on starting the engine—1) Engage the parking brake; 2) Set the drive to neutral; 3) Open the choke; 4) Turn the engine switch on; 5) Engage the fuel switch; 6) Pull the recoil starter and set the throttle to fast; 7) Close the choke.

2 Read the *Operator's Manual* for information on shutting off the engine—1) Set the throttle to slow; 2) Engage the parking brake; 3) Set the drive to neutral; 4) Turn the engine switch to stop; 5) Disengage the fuel switch.

Decal Part: 125-4959

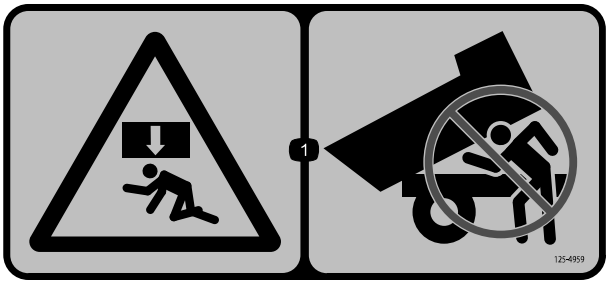

decal125-4959

1 Force from above can cause crushing of the whole body—never place your head under the hopper.

Decal Part: 125-4960

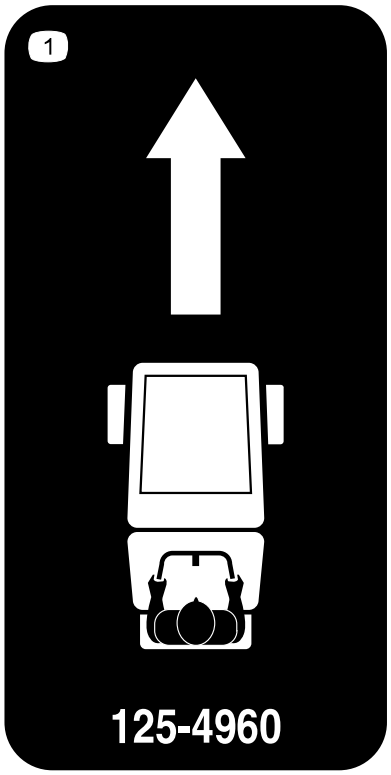

decal125-4960

(1) Forward

Decal Part: 125-4961

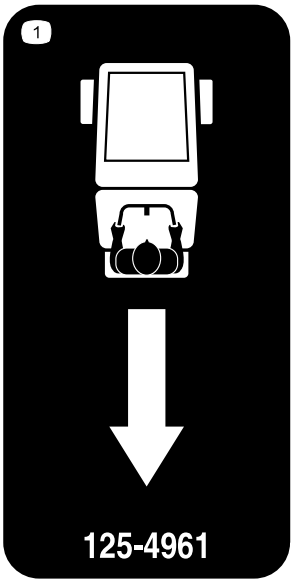

decal125-4961

(1) Reverse

Decal Part: 125-4962

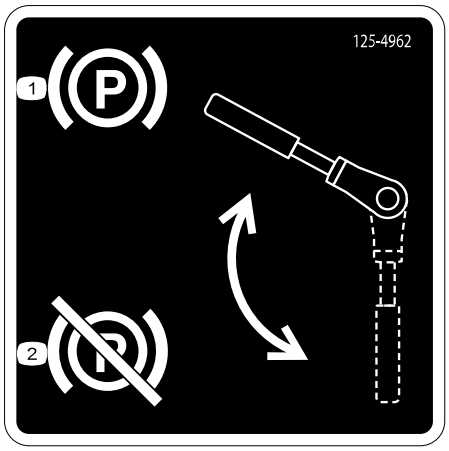

decal125-4962

1 Engage the parking brake.

2 Disengage the parking brake.

Decal Part: 125-4963

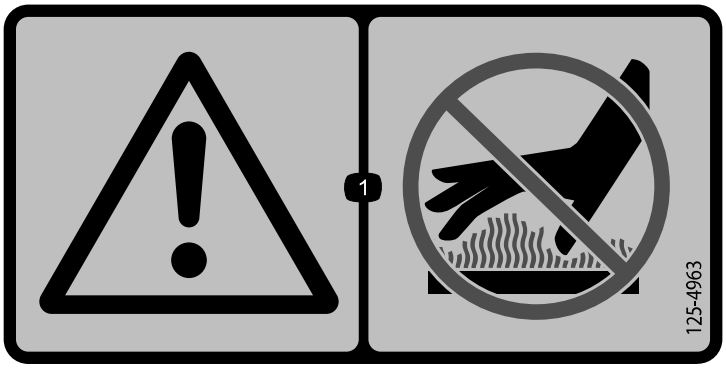

decal125-4963

1 Warning—stay away from hot surfaces.

Decal Part: 125-4964

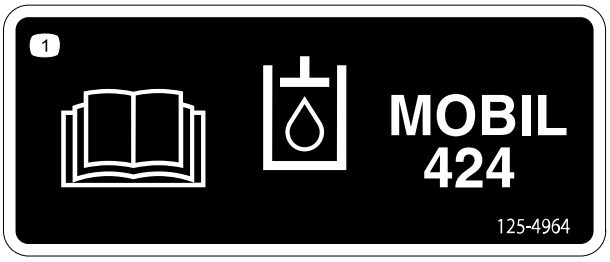

decal125-4964

1 Read the *Operator's Manual* for hydraulic oil information.

Decal Part: 125-4967

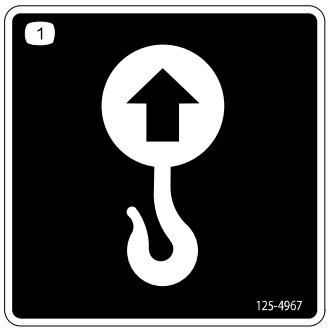

decal125-4967

1 Lift point

Decal Part: 125-6694

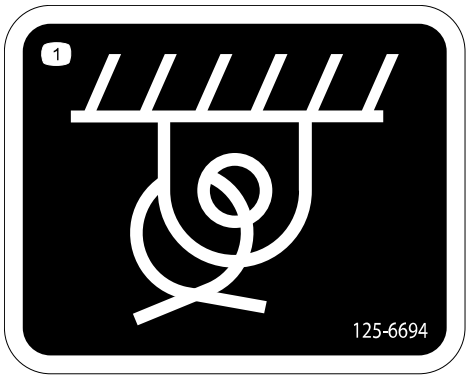

decal125-6694

1 Tie-down location

Decal Part: 125-8190

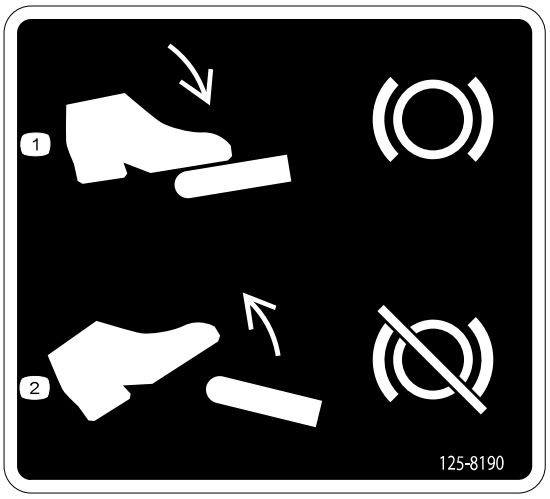

decal125-8190

1 Press down on the pedal to engage the service brake.

2 Release the pedal to disengage the service brake.

Decal Part: 127-2855

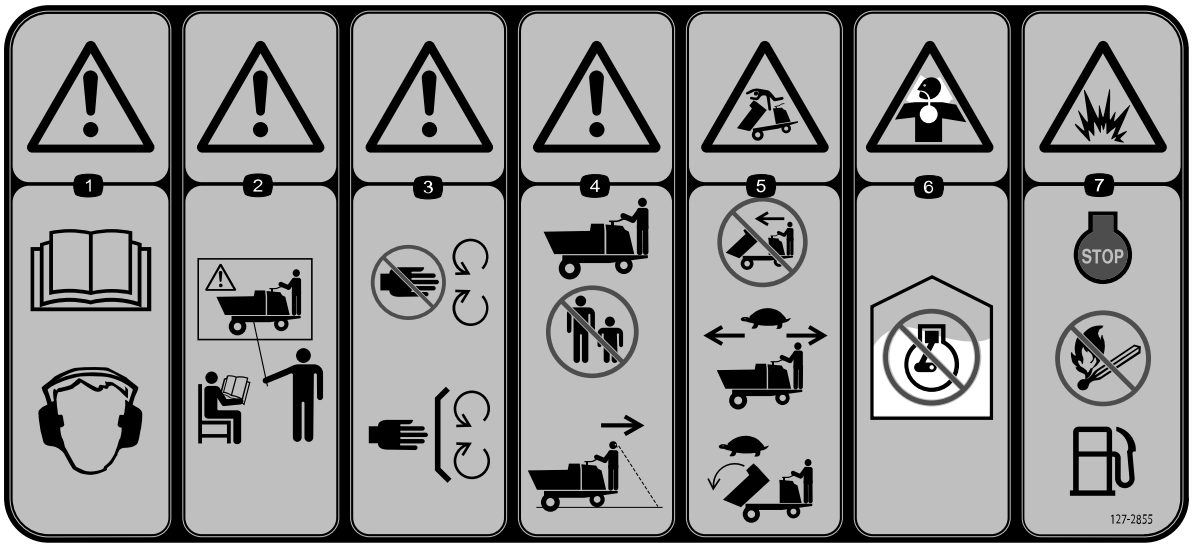

decal127-2855

1. Warning—read the *Operator's Manual*; wear hearing protection.
2. Warning—all operators should read the *Operator's Manual* and be trained before operating the machine.
3. Warning—stay away from moving parts; keep all guards and shields in place.
4. Warning—keep bystanders away; look behind and down when moving in reverse.
5. Tipping hazard—do not drive forward with the hopper raised; drive slowly with the hopper lowered; raise the hopper slowly.
6. Asphyxiation hazard, poisonous fumes, or toxic gases—do not run the engine in an enclosed space.
7. Explosion hazard—shut off the engine and do not expose to fire or open flame while fueling.

Decal Part: 130-2844

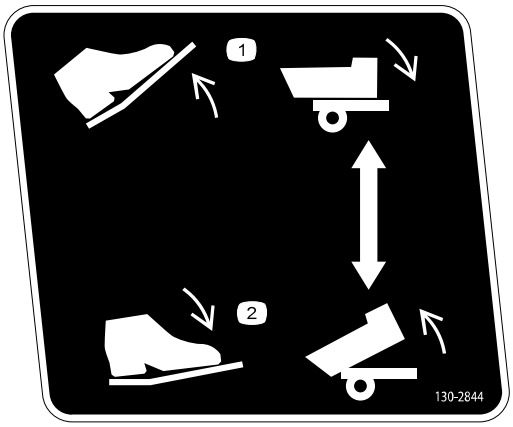

decal130-2844

1 Release the pedal to lower the hopper.

2 Press down on the pedal to raise the hopper.

Decal Part: 133-8062



s_decal133-8062

Product Overview

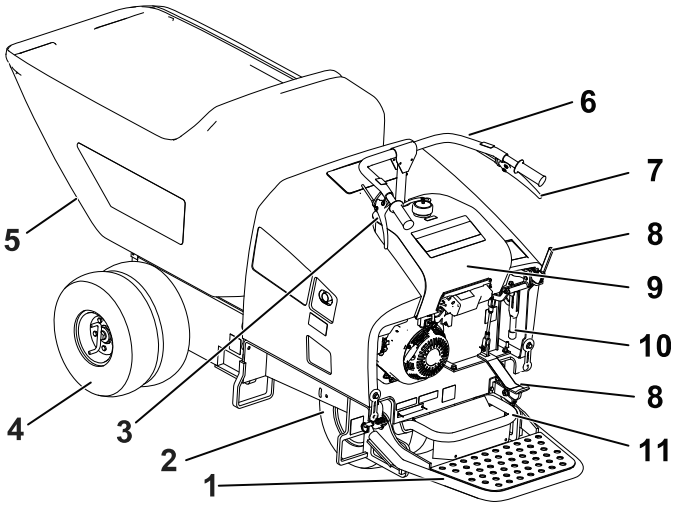

G356654

1. Operator platform
2. Steer tires
3. Reverse-speed-control lever
4. Drive tires
5. Hopper
6. Handle bars
7. Forward-speed-control lever
8. Dump handle/pedal
9. Fuel tank
10. Parking brake
11. Brake pedal

Controls

Brake Pedal

Press down on the brake pedal 1 to stop the machine.

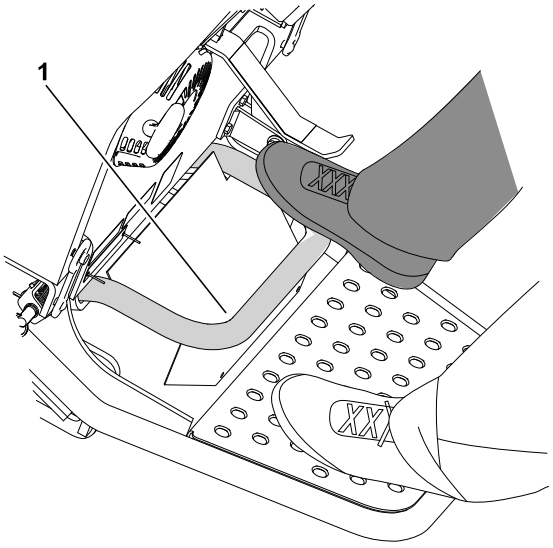

g356774

Parking Brake

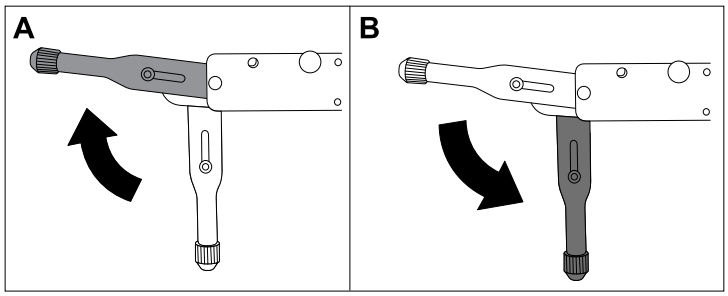

g357455

1. Engage
2. Disengage

Drive Controls

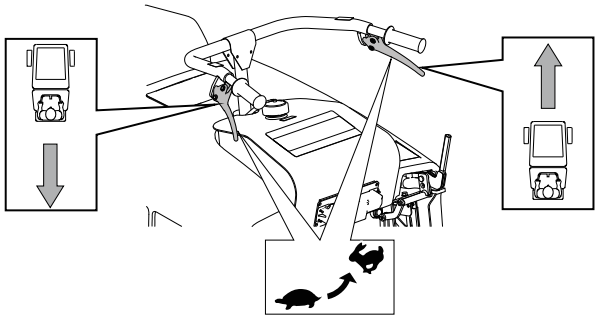

g356775

Dump Controls

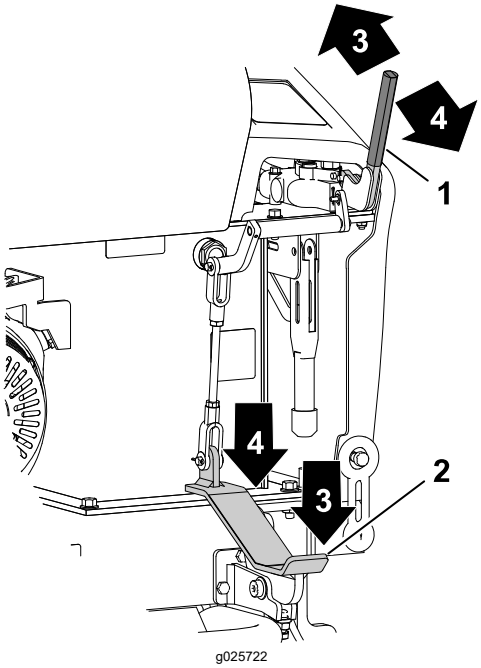

g025722

1. Dump switch
2. Dump pedal
3. Lower the hopper
4. Dump the hopper

Fuel Gauge

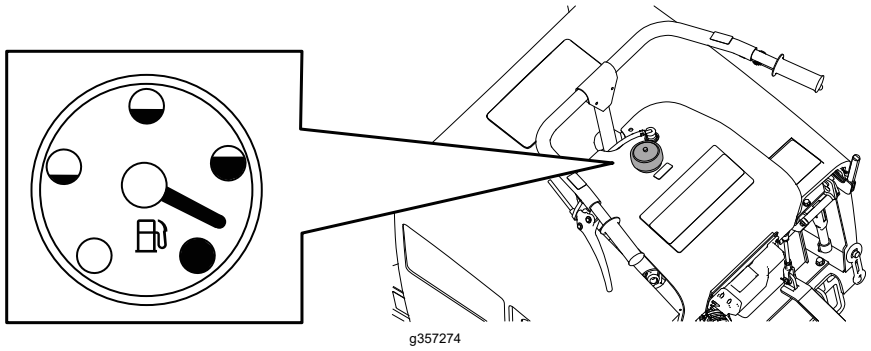

Engine Controls

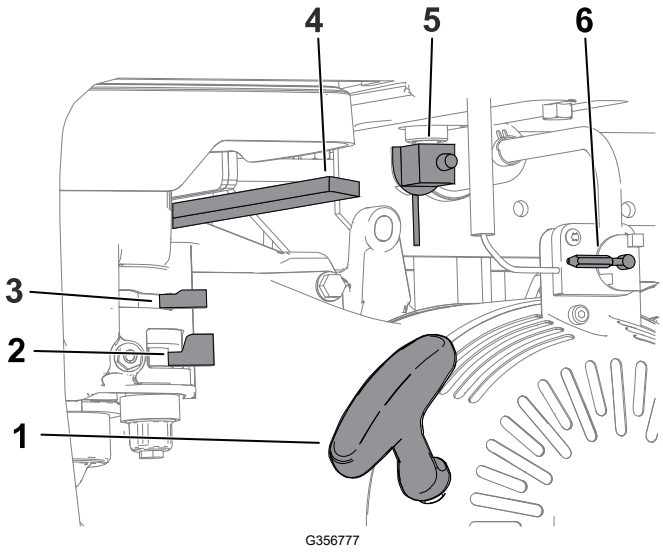

1. Recoil starter
2. Fuel shut-off valve
3. Choke lever
4. Throttle lever
5. Fuel tank shut off valve
6. On/Off switch

Choke Control

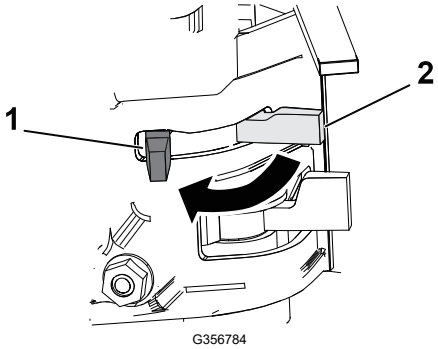

1. ENGAGE the choke before starting a cold engine.
2. DISENGAGE the choke when the engine is warm.

Engine Controls (continued)

Engine On/Off Control

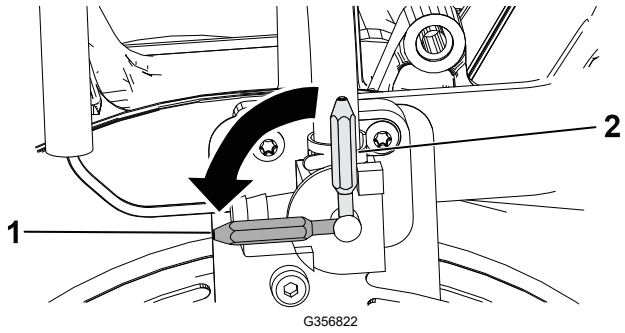

1 On

2 Off

Fuel Shutoff Controls

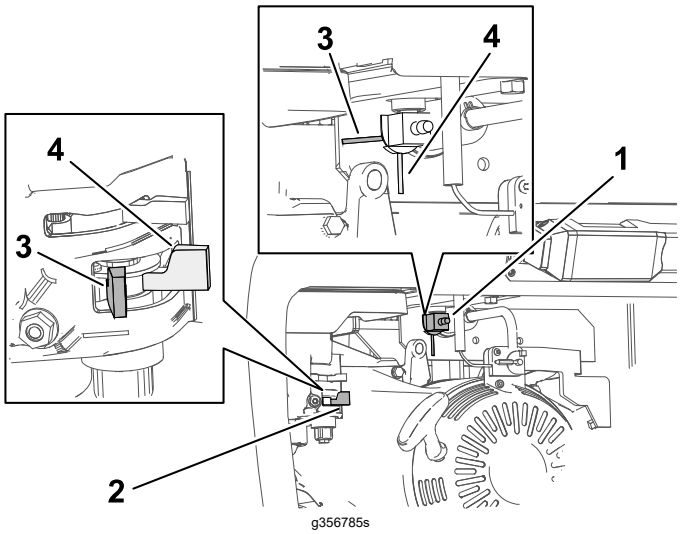

1 Fuel tank shutoff control—use when performing maintenance and storing the machine.

2 Engine fuel shutoff control—use before starting and after stopping the machine.

3 Off

4 On

Recoil Starter

Use the recoil starter handle to start the engine.

Throttle Control

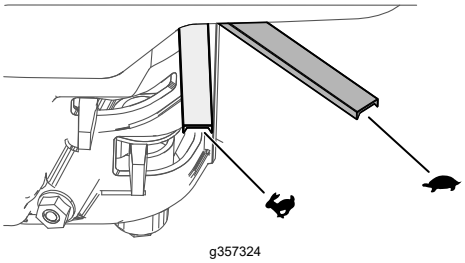

Specifications

Note: Specifications and design are subject to change without notice.

Width (single wheel)	86 cm (34 inches)
Width (single wheel)	117 cm (46 inches)
Length	268 cm (105.5 inches)
Height	114.3 cm (45 inches)
Weight	621 kg (1370 lb)
Hopper capacity	0.45 m^3 (16 cu.ft.)
Maximum load	1136 kg (2500 lb)
Maximum load (single wheel)	850 kg (1875 lb)
Wheelbase	107 cm (42 inches)
Discharge height	16.5 cm (6.5 inches)

Attachments/Accessories

A selection of Toro approved attachments and accessories is available for use with the machine to enhance and expand its capabilities. Contact your Authorized Service Dealer or authorized Toro distributor or go to www.Toro.com for a list of all approved attachments and accessories.

To ensure optimum performance and continued safety certification of the machine, use only genuine Toro replacement parts and accessories. Replacement parts and accessories made by other manufacturers could be dangerous, and such use could void the product warranty.

Before Operation

Before Operation Safety

General Safety

- Never allow children or untrained people to operate the machine. Local regulations may restrict the age of the operator. The owner is responsible for training all operators and mechanics.
- Become familiar with the safe operation of the equipment, operator controls, and safety signs.
- Inspect the area where you will use the machine and remove all objects that could interfere with the operation of the machine.
- Know and mark the locations of all utility lines.
- Check that the operator's presence controls, safety switches, and shields are attached and functioning properly. Do not operate the machine unless they are functioning properly.
- Locate the pinch point areas marked on the machine and keep your hands and feet away from these areas.
- Do not carry passengers on the machine.
- Keep bystanders, especially children, out of the operating area. Ensure that the area is clear of bystanders before operating the machine. Shut off the machine if a bystander enters the area.
- Park the machine on a level surface, engage the parking brake, and shut off the engine. Wait for all movement to stop and allow the machine to cool before adjusting, servicing, cleaning, or storing the machine.

Fuel Safety

Use extreme care in handling fuel. It is flammable and its vapors are explosive.

- Extinguish all cigarettes, cigars, pipes, and other sources of ignition.
- Use only an approved container.
- Do not remove the fuel cap or fill the fuel tank while the engine is running or hot.
- Do not add or drain fuel in an enclosed space.
- Do not store the machine or fuel container where there is an open flame, spark, or pilot light, such as on a water heater or other appliance.

Before Operation Safety (continued)

- If you spill fuel, do not attempt to start the engine; avoid creating any source of ignition until the fuel vapors have dissipated.
- Do not fill containers inside a vehicle or on a truck or trailer bed with a plastic liner. Always place containers on the ground, away from your vehicle before filling.
- Remove the equipment from the truck or trailer and refuel it while it is on the ground. If this is not possible, then refuel from a portable container rather than a fuel-dispenser nozzle.
- Keep the fuel-dispenser nozzle in contact with the rim of the fuel tank or container opening at all times until fueling is complete. Do not use a nozzle-lock-open device.
- Do not operate the machine without the entire exhaust system in place and working properly.
- Fuel is harmful or fatal if swallowed. Long-term exposure to vapors can cause serious injury and illness.
  - Avoid prolonged breathing of vapors.
  - Keep your face away from the nozzle and fuel tank or conditioner opening.
  - Keep fuel away from your eyes and skin.

Fuel

Fuel Specifications

Capacity	21.6 L (5.7 US gallons)
Type	Unleaded gasoline
Minimum octane rating	87 (US) or 91 (research octane; outside the US)
Ethanol	No more than 10% by volume
Methanol	None
MTBE (methyl tertiary butyl ether)	Less than 15% by volume
Oil	Do not add to the fuel

Use only clean, fresh (no more than 30 days old), fuel from a reputable source.

IMPORTANT

To reduce starting problems, add fuel stabilizer/conditioner to fresh fuel as directed by the fuel-stabilizer/conditioner manufacturer.

Fuel (continued)

Filling the Fuel Tank

1. Park the machine on a level surface, shut off the engine, and allow it to cool.
2. Clean around the fuel tank cap and remove it.
3. Add fuel to the fuel tank until the level is just below the bottom of the filler neck.

   Note: This space in the tank allows fuel to expand. Do not fill the fuel tank completely full.
4. Install the fuel tank cap securely, turning it until it clicks.
5. Wipe up any fuel that may have spilled.

Performing Daily Maintenance

Before starting the machine each day, perform the Each Use/Daily procedures listed in the Maintenance Schedule.

During Operation

During Operation Safety

General Safety

- The owner/user can prevent and is responsible for accidents that may cause personal injury or property damage.
- Do not exceed the rated operating capacity, as the machine may become unstable, which may result in loss of control.
- Wear appropriate clothing including eye protection, long pants, substantial slip-resistant footwear, and hearing protection. Tie back long hair and do not wear loose clothing or loose jewelry.
- Use your full attention while operating the machine. Do not engage in any activity that causes distractions; otherwise, injury or property damage may occur.
- Do not operate the machine while ill, tired, or under the influence of alcohol or drugs.
- Operate the machine only in good light, keeping away from holes and hidden hazards.
- Ensure that all drives are in the NEUTRAL position before starting the engine. Start the engine only from the operating position.
- Keep your hands and feet away from moving parts. If possible, do not make adjustments with the engine running.
- Never jerk the controls; use a steady motion.
- Use care when approaching blind corners, shrubs, trees, or other objects that may obscure your vision.
- Slow down and use caution when making turns and crossing roads and sidewalks with the machine. Always yield the right-of-way.

During Operation Safety (continued)

- Operate the engine only in well-ventilated areas. Exhaust gasses contain carbon monoxide, which is lethal if inhaled.
- Never leave a running machine unattended.
- Operate the machine only in good visibility and appropriate weather conditions. Do not operate the machine when there is the risk of lightning.
- Be aware of obstacles in close proximity to you. Failure to maintain adequate distance from trees, walls, and other barriers may result in injury as the machine backs up during operation if you are not attentive to the surroundings.
- Check for overhead clearance (i.e., electrical wires, branches, and doorways) before driving under any objects and do not contact them.
- Do not overload the hopper and always keep the load level when operating the machine.
- Keep the hopper lowered and straight (if applicable) when moving, storing, loading, transporting, and cleaning the machine.
- Do not modify the machine.
- Use care and slow down when you are operating the machine on a slippery surface.
- Always look down and behind you before moving the machine in reverse.
- If you feel uneasy operating the machine because the terrain is rough, slippery, or unfamiliar, do not do it.
- Distribute loads evenly to improve the stability and control of the machine.
- Liquid loads shift, which can cause the machine to tip over.

Slope Safety

- Slopes are a major factor related to loss-of-control and tip-over accidents, which can result in severe injury or death. You are responsible for safe slope operation. Operating the machine on any slope requires extra caution. Before using the machine on a slope, do the following:
  - Review and understand the slope instructions in the manual and on the machine.
  - Evaluate the site conditions of the day to determine if the slope is safe for machine operation. Always use common sense and good judgment when performing this evaluation. Changes in the terrain, such as moisture, can quickly affect the operation of the machine on a slope.
- Do not raise the hopper on a slope. Raising the hopper on a slope affects the stability of the machine. Keep the hopper in the lowered and straight position when on slopes.
- When operating on a slope, fold the platform up and walk behind the machine until it is on flat ground.
- **Operate up and down slopes with the heavy end of the machine uphill.** Weight distribution changes with a full hopper. A full hopper makes the front of the machine the heavy end, so walk behind the machine with the full hopper uphill.
- Identify hazards at the base of the slope. Do not operate the machine near drop-offs, ditches, embankments, water or other hazards. The machine could suddenly roll over if a wheel or track goes over the edge or the edge collapses. Keep a safe distance (twice the width of the machine) between the machine and any hazard.

During Operation Safety (continued)

- Avoid starting, stopping, or turning the machine on a slope. Avoid making sudden changes in speed or direction; turn slowly and gradually.
- Keep all movements on slopes slow and gradual. Do not make sudden changes in speed or direction.
- Do not operate the machine under any conditions where traction, steering, or stability is in question. Be aware that operating the machine on wet grass, across slopes or downhill may cause the machine to lose traction. Loss of traction to the wheels or tracks may result in sliding and a loss of braking and steering. The machine can slide even if the wheels or tracks are stopped.
- Remove or mark obstacles such as ditches, holes, ruts, bumps, rocks or other hidden hazards. Tall grass can hide obstacles. Uneven terrain could overturn the machine.
- If you lose control of the machine, step off and away from the direction of travel of the machine.

Starting the Engine

1. Stand on the platform.
2. Engage the parking brake (A).
3. Ensure that the forward/reverse speed levers (B) are in the neutral (released) position.
4. Turn the fuel tank shutoff valve (C) to the ON position.
5. Move the engine fuel-shutoff valve (D) to the ON position.
6. Move the choke lever (E) to the ON position when starting a cold engine.

   Note: The choke may not be required when starting a warm engine.
7. Move the throttle lever (F) away from the SLOW position, about 1/3 of the way toward the FAST position.
8. Turn the engine On/Off switch (G) to the ON position.
9. Pull the recoil starter handle (H) out until positive engagement results, then pull it vigorously to start the engine.

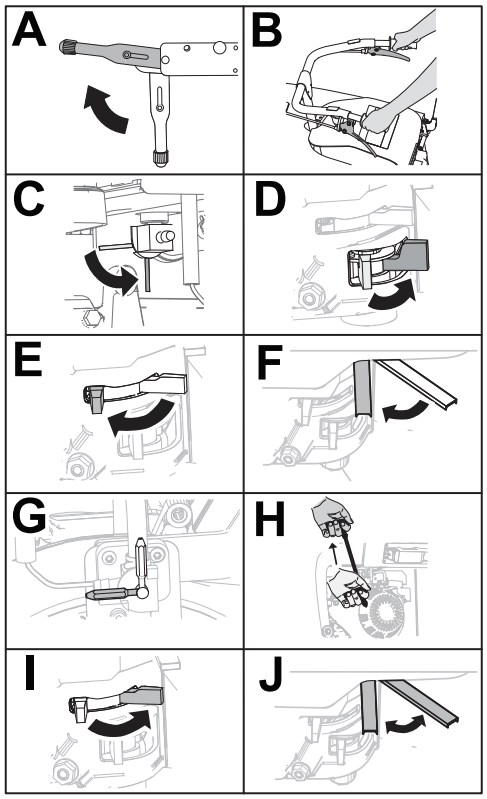

G357562s

IMPORTANT

Do not pull the recoil rope to its limit or let go of the starter handle when the rope is pulled out; the rope may break or the recoil assembly may be damaged.

10. When the engine has started and warms up, push the choke lever (I) to the OFF position.

Starting the Engine (continued)

11. Move the throttle lever (J) to the desired setting.

Shutting Off the Engine

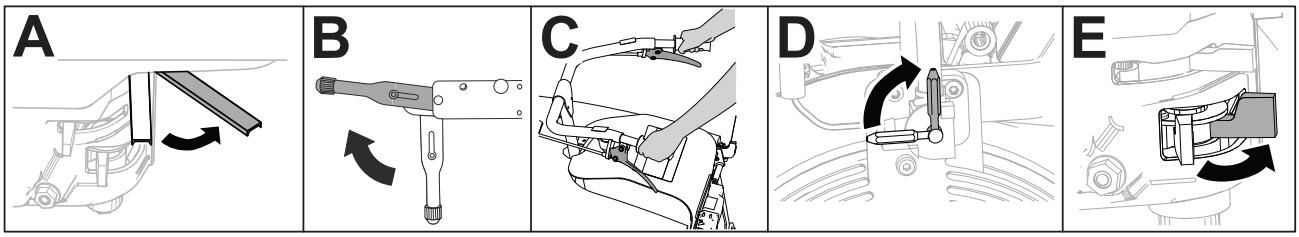

g357646s

1. Move the throttle lever (A) to the MIN position.
2. Engage the parking brake (B).
3. Ensure that the forward/reverse speed levers are in the NEUTRAL position (C).
4. Turn the engine On/Off switch to the OFF position (D).
5. When the engine stops running, turn the fuel-shutoff valve on the engine to the OFF position (E).

Operating the Machine

1. Step onto the machine.

⚠ CAUTION ⚠

When mounting the machine, slippery or uneven ground may cause you to fall.

Always have 3 out of 4 arms/legs in contact with the machine when you mount or dismount the machine.

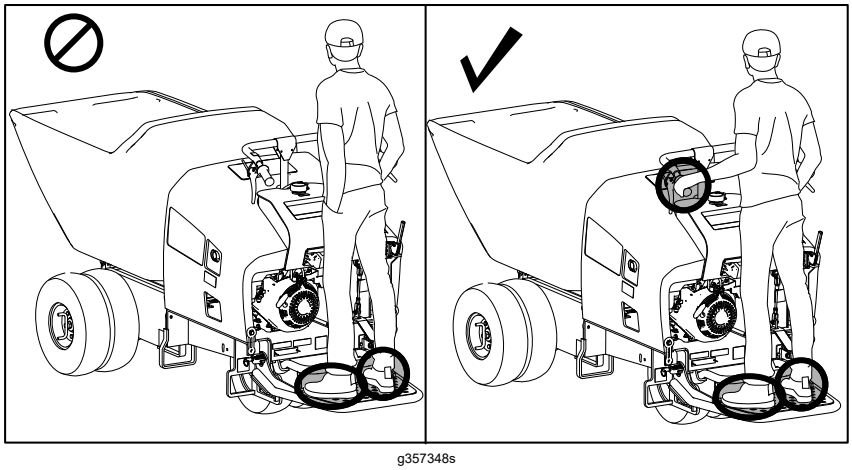

g357348s

2. Start the engine.

3. Adjust the throttle lever to the desired engine rpm (A).
4. Disengage the parking brake lever (B).
5. Move the machine in the desired direction:
   A. forward—squeeze the speed-control-lever on the right handle bar (C).
   B. rearward—squeeze the speed-control lever on the left handle bar (D).

   Note: The more you squeeze the handle, the faster the machine travels.
6. Release the speed control handle and press the brake pedal to stop the machine (E).
7. Engage the parking brake (F) and shut off the engine.

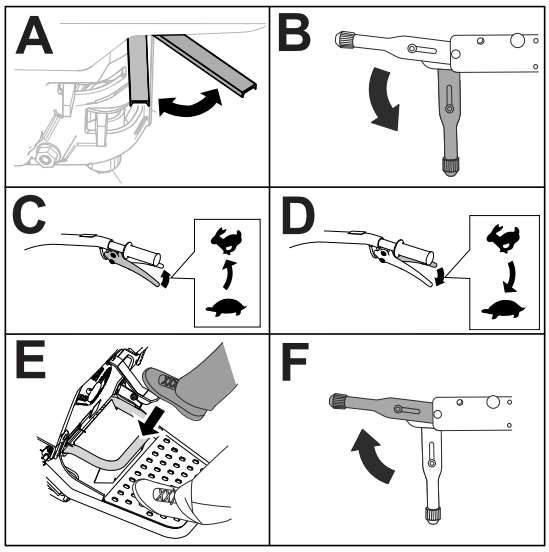

G357351s

Operator Platform

You can use the machine with the platform in the up or down position.

⚠ WARNING ⚠

The operator platform is heavy and may cause injury when you raise or lower it. Carefully lower or raise the operator platform, as suddenly dropping it could injure you.

- **Do not put your hands or fingers in the platform-pivot area when lowering or raising the operator platform.**
- **Make sure that the platform is supported when you pull the latch pin out.**
- **Make sure that the latch secures the platform when folding it up. Push it tight against the cushion for the latch pin to lock into place.**
- **Keep bystanders away from the machine when raising or lowering the platform.**

Operate the machine with the platform up for the following conditions:

- Using the machine near drop-offs
- Using the machine in small areas where the machine is too large
- Areas with low-hanging branches or obstacles
- When loading or unloading the machine from a trailer for transport
- Driving up slopes

Operate the machine with the platform down for the following conditions:

- Using the machine in most areas
- Driving across slopes

Operator Platform (continued)

- Driving down slopes

Lowering the Platform

1. Push the platform against the cushion to release pressure on the latch pin.
2. Pull the latch pin out and lower the platform.

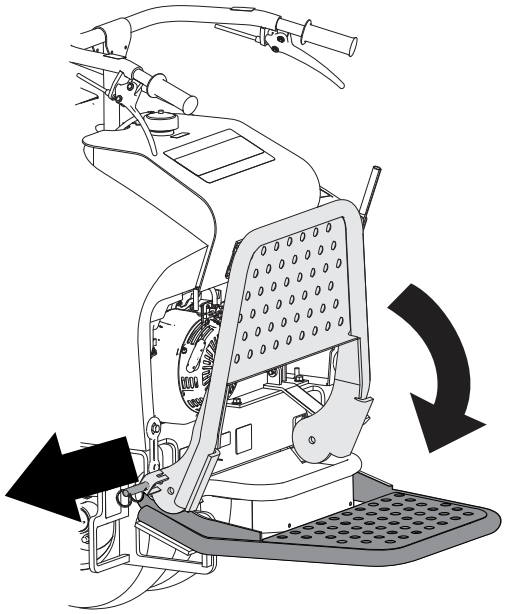

G384422s

Raising the Platform

1. Pull out the latch pin and raise the platform.
2. Release the latch pin to lock the platform in place.

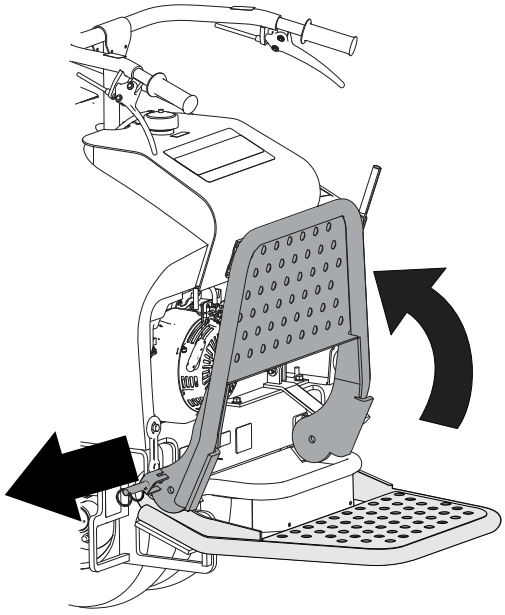

G384423s

Operating the Hopper

The machine is normally operated on uneven, unpaved, bumpy, and/or inclined surfaces. Know the load capacities of your machine and adjust your load accordingly.

Operating the Hopper (continued)

1. Position the machine in the area where you intend to dump the load.
2. Dump the hopper ④ by either of the following:
   - Pull the dump handle ① down.
   - Press down on the forward part of the dump pedal ②.
3. Move the hopper to the upright position ③ by either of the following:
   - Push the dump handle ① up.
   - Press down on the rear part of the dump pedal ②.

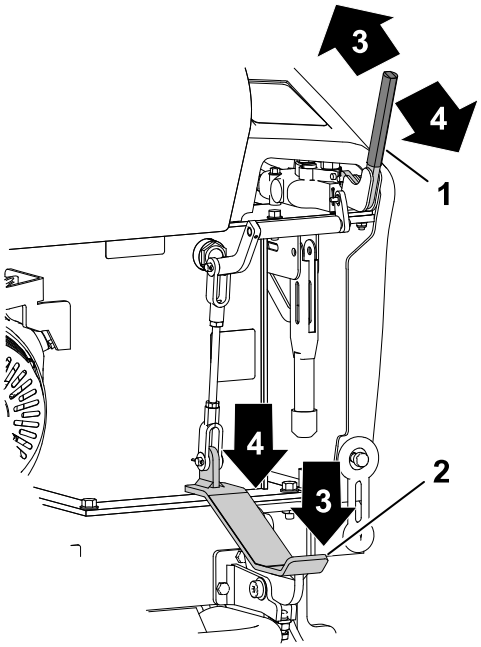

g025722s

After Operation

After Operation Safety

General Safety

- Engage the parking brake, shut off the engine, remove the key (if applicable), and wait for all movement to stop before adjusting, cleaning, or repairing the machine.
- Do not touch parts that may be hot from operation. Allow them to cool before attempting to maintain, adjust, or service the machine.
- Clean debris from drives, mufflers, and the engine to help prevent fires. Clean up oil or fuel spills.
- Use care when loading or unloading the machine into a trailer or truck.

Haul the Machine

Use a heavy-duty trailer or truck to haul the machine. Use a full-width ramp. Ensure that the trailer or truck has all the necessary brakes, lighting, and marking as required by law. Please carefully read all the safety instructions. Knowing this information could help you or bystanders avoid injury. Refer to your local ordinances for trailer and tie-down requirements.

Haul the Machine (continued)

WARNING

Driving on the street or roadway without turn signals, lights, reflective markings, or a slow-moving-vehicle emblem is dangerous and can lead to accidents causing personal injury.

Do not drive the machine on a public street or roadway.

Selecting a Trailer

WARNING

Loading a machine onto a trailer or truck increases the possibility of tip-over and could cause serious injury or death.

- **Use only full-width ramps.**
- **Ensure that the length of ramp is at least 4 times as long as the height of the trailer or truck bed to the ground. This ensures that ramp angle does not exceed 15 degrees on flat ground.**

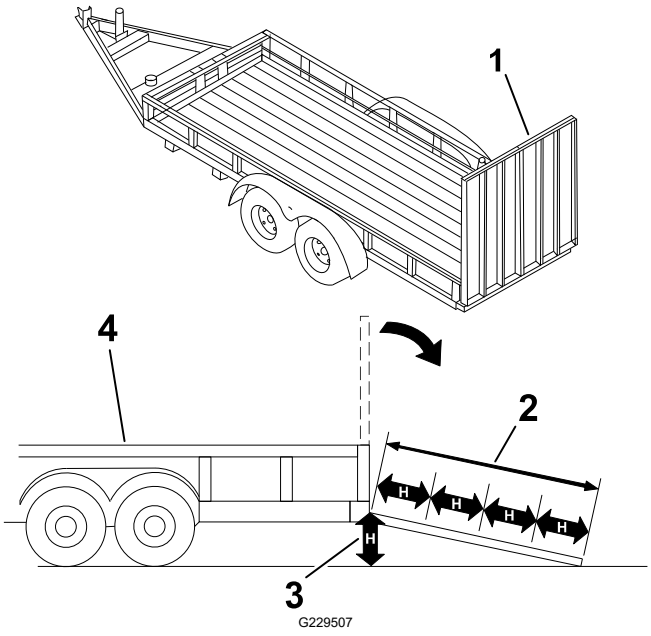

(1) Full-width ramp in stowed position

(2) Ramp is at least 4 times as long as the height of the trailer or truck bed to the ground

(3) H = height of the trailer or truck bed to the ground

(4) Trailer

Haul the Machine (continued)

Loading the Machine

⚠ WARNING ⚠

Loading a machine onto a trailer or truck increases the possibility of tip-over and could cause serious injury or death.

- **Use extreme caution when operating a machine on a ramp.**
- **Load and unload the machine with the heavy end up the ramp.**
- **Avoid sudden acceleration or deceleration while driving the machine on a ramp as this could cause a loss of control or a tip-over situation.**

---

1. If using a trailer, connect it to the towing vehicle and connect the safety chains.
2. If applicable, connect the trailer brakes.
3. Lower the ramp(s).
4. Load the machine onto the trailer with the heavy end up the ramp, carrying loads low.
   - If the machine has a **full** hopper, drive the machine forward up the ramp (1).
   - If the machine has an **empty** hopper, back the machine up the ramp (2).

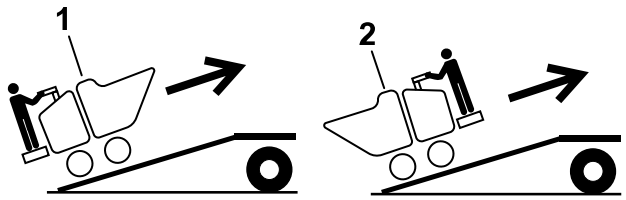

g357132

5. Engage the parking brake and shut off the engine.
6. Raise the operator platform.

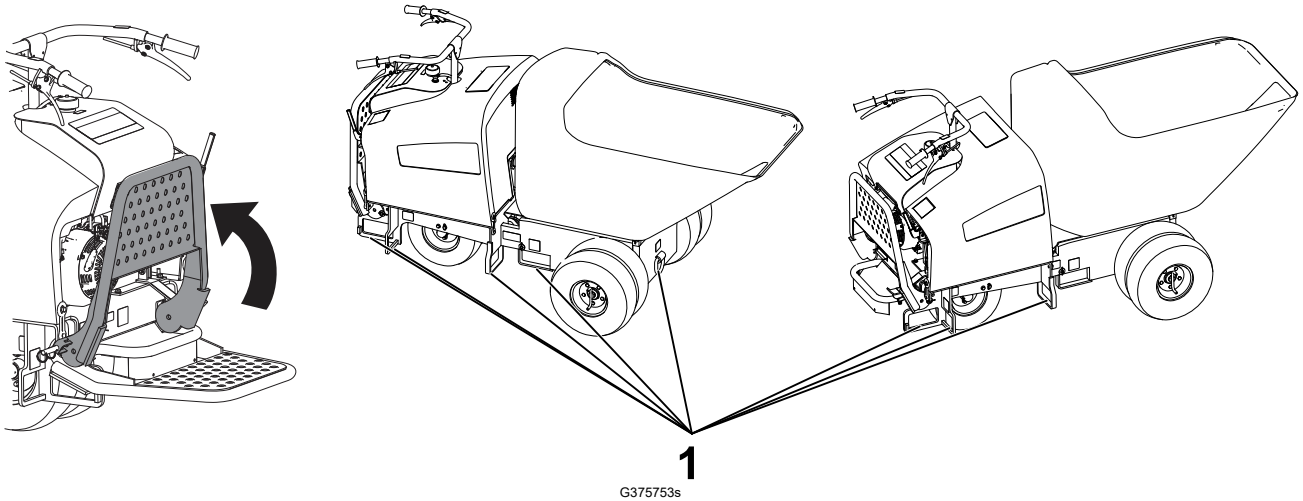

G375753s

Haul the Machine (continued)

7. Use the metal tie-down loops [1] to securely fasten the machine to the trailer or truck with straps, chains, cable, or ropes . Refer to local regulations for tie-down requirements.

IMPORTANT

Do not use the tie-down loops to lift the machine.

Unloading the Machine

1. Lower the ramp(s).
2. Lower the operator platform.
3. Unload the machine from the trailer with the heavy end up the ramp, carrying loads low.

   - If the machine has a **full** hopper, back it down the ramp [1].
   - If the machine has an **empty** hopper, drive it forward down the ramp [2].

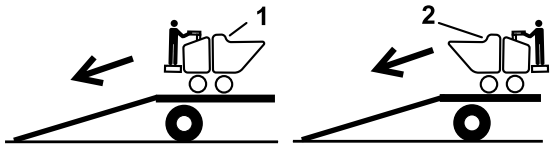

g357130

Removing the Outer Wheels

You can reduce the width of the machine from 117 cm (46 inch) to 91 cm (36 inch), using a wood block and a crow bar.

IMPORTANT

The maximum payload is reduced to 850 kg (1875 lb) when operating the machine without the dual wheels.

1. Drive the machine onto a wood block so only the inner wheel is on top of the block with the outer wheel unsupported; engage the parking brake.
2. Remove the large T-bolt in the center of the wheel with a crow bar.
3. Remove the outside wheel hub with the quick-change hub attached.
4. Repeat the above steps on other side of the machine.

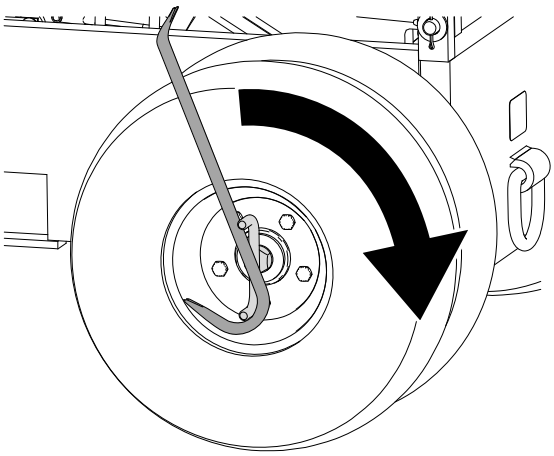

G358041s

Maintenance Safety

- Park the machine on a level surface, engage the parking brake, and shut off the engine. Wait for all movement to stop and allow the machine to cool before adjusting, servicing, cleaning, or storing the machine.
- Disconnect the battery or remove the spark-plug wire before making any repairs. Disconnect the negative terminal first and the positive terminal last. Connect the positive terminal first and negative last.
- Charge the batteries in an open, well-ventilated area, away from spark and flames. Unplug the charger before connecting or disconnecting it from the battery. Wear protective clothing and use insulated tools.
- Battery acid is poisonous and can cause burns. Avoid contact with skin, eyes, and clothing. Protect your face, eyes, and clothing when working with a battery.
- Battery gasses can explode. Keep cigarettes, sparks, and flames away from the battery.
- Do not change the engine governor setting or overspeed the engine.
- Support the machine with jack stands whenever you work under the machine.
- Carefully release pressure from components with stored energy.
- Keep all parts in good working condition and all hardware tightened. Replace all worn or damaged decals.
- Use the cylinder lock to secure the hopper in the raised position.
- Never tamper with safety devices.
- To ensure safe, optimal performance of the machine, use only genuine Toro replacement parts. Replacement parts made by other manufacturers could be dangerous, and such use could void the product warranty.
- Seek immediate medical attention if fluid is injected into skin. Injected fluid must be surgically removed within a few hours by a doctor.
- Ensure that all hydraulic-fluid hoses and lines are in good condition and all hydraulic connections and fittings are tight before applying pressure to the hydraulic system. Keep your body and hands away from pinhole leaks or nozzles that eject high-pressure hydraulic fluid.
- Use cardboard or paper to find hydraulic leaks.
- Safely relieve all pressure in the hydraulic system before performing any work on the hydraulic system.

Recommended Maintenance Schedule

Maintenance Service Interval	Maintenance Procedure	Part No.	Qty	Description
After the first 50 hours	Change the engine oil.	-	-	-
Before each use or daily	Check the engine oil level.	-	-	-
	Check the brake pedal.	-	-	-
	Check the parking brake.	-	-	-
	Check the hydraulic fluid level.	-	-	-
	Remove debris from the machine.	-	-	-
	Check for loose fasteners.	-	-	-
Every 40 hours	Check the condition of the tires.	-	-	-
	Check the lug nuts.	-	-	-
	Check the hydraulic lines.	-	-	-
Every 50 hours	Grease and oil the machine.	-	-	-
	Clean the air cleaner.	-	-	-
Every 100 hours	Change the engine oil.	-	-	-
	Check/Adjust the spark plug.	-	-	-
	Clean the sediment cup.	-	-	-
	Replace the hydraulic filter.	ST45150	1	Hydraulic filter
Every 200 hours	Change the hydraulic fluid.	-	-	-
Every 300 hours	Replace the paper element.	-	-	-
	Replace the spark plug.	-	-	-
	Change the fuel filter.	-	-	-
Every 1,000 hours	Drain and flush the fuel tank.	-	-	-
Every 1,500 hours	Replace all moving hydraulic hoses.	125-8569	1	Hydraulic hose
		125-8570	1	Hydraulic hose
Yearly	Pack wheel bearings.	-	-	-
Yearly or before storage	Touch up chipped paint.	361-9	1	Paint
		361-10	1	Paint

Pre-Maintenance Procedures

Moving a Non-Functional Machine

In an emergency, you can move the machine forward by actuating the bypass valve (1) in the hydraulic pump and pushing or towing the machine.

Moving a Non-Functional Machine (continued)

IMPORTANT

Do not tow or pull the machine without bypassing the parking brake or you will damage the hydraulic system.

1. Place the hopper in the dump position and remove the cowl.
2. Rotate the bypass valve counterclockwise to tow the machine.
3. Tow the machine as required using the tie down locations.

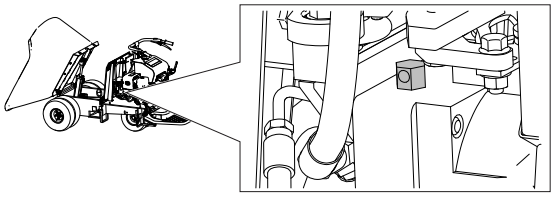

G357878s

IMPORTANT

Do not push or tow the machine faster than 3 to 4.8 km/h (2 to 3 mph) for longer than 3 minutes, because you may damage the transmission. The bypass valves must be open whenever you push or tow the machine.

4. Rotate the bypass valve clockwise to operate the machine normally.

Lifting the Machine

Lifting the Machine with a Hoist

Ensure that the hopper is empty before lifting the machine.

1. Place the platform in the raised position.
2. Place the hopper in the dump position.
3. Attach a chain or straps to each of the 3 lift points located under the hopper.
4. Remove any slack in the chains or straps to ensure that the machine is properly balanced.

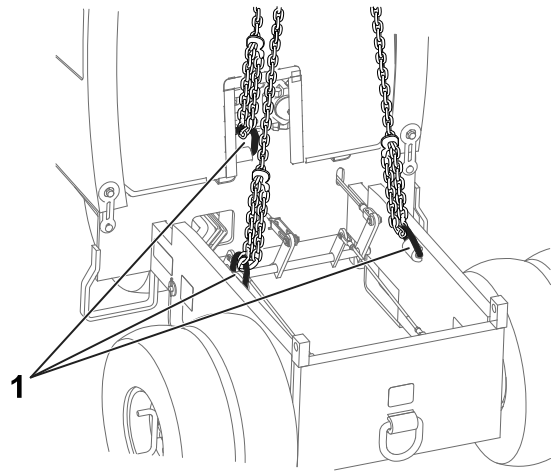

g358012s

Lifting the Machine with a Forklift

Ensure that the hopper is empty before lifting the machine.

1. Place the platform in the raised position.

Lifting the Machine (continued)

2. Lift the machine using the side or rear pockets.

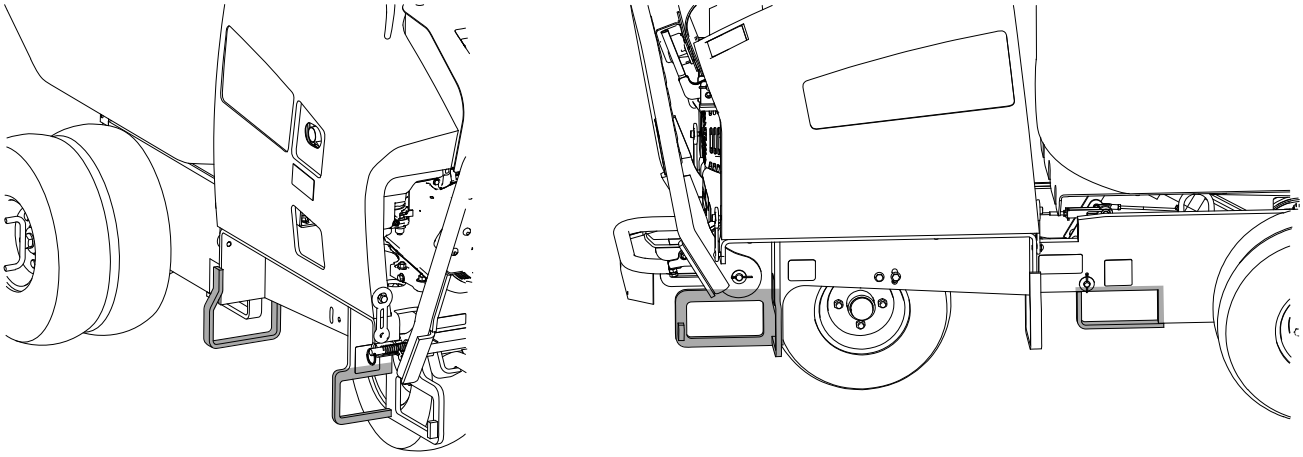

g358688s

Removing the Cowl

1. Place the hopper in the dump position.
2. Shut off the engine and allow the engine to cool.
3. Unhook the cowl latches and remove the cowl.
4. When finished, install the cowl and secure the latches.

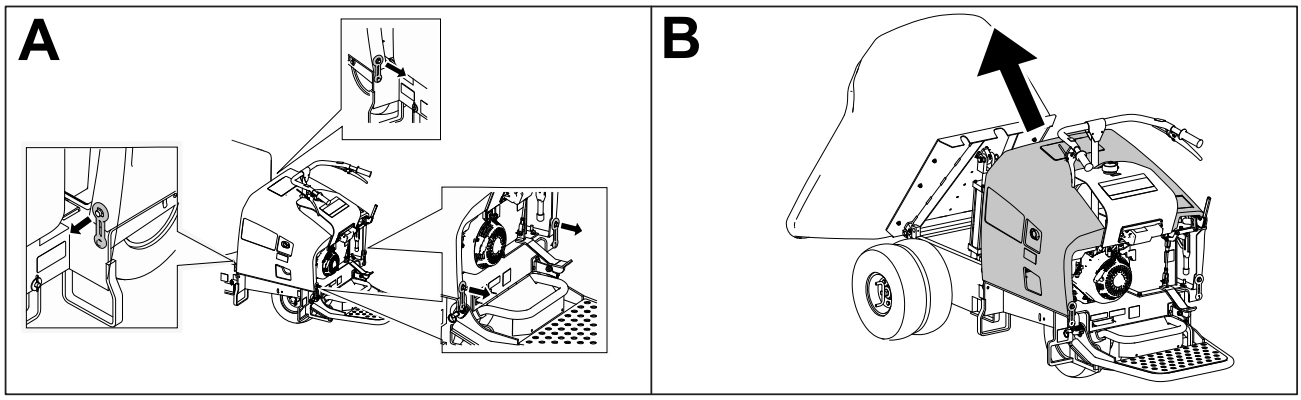

g358757s

Lubrication

Greasing the Machine

Grease Type: General-purpose grease.

Note: Remove the blue protection caps, if applicable, before greasing and replace when finished.

1. Park the machine on a level surface and engage the parking brake.
2. Shut off the engine and allow the engine to cool.
3. Clean the grease fittings with a rag.

Greasing the Machine (continued)

4. Connect a grease gun to each fitting.

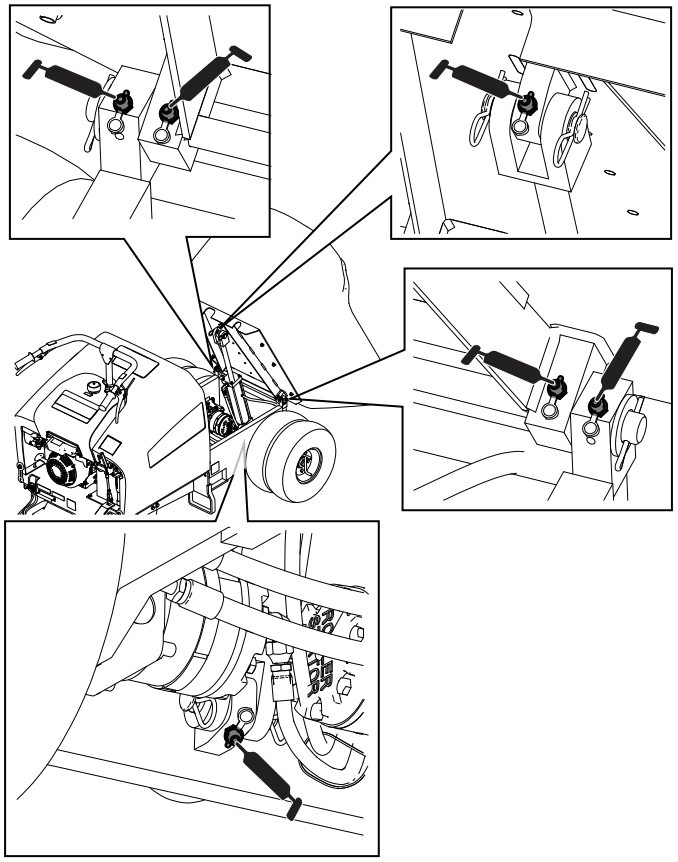

G357166

5. Pump grease into the fittings until grease begins to ooze out of the bearings (approximately 3 pumps).
6. Wipe up any excess grease.

Engine Maintenance

Servicing the Air Cleaner

IMPORTANT

Do not operate the engine without the air-cleaner element. Operating without an element causes damage to the engine.

1. Disconnect the spark-plug wire.

Servicing the Air Cleaner (continued)

2. Remove the wing nut ① that secures the air-cleaner cover to the air cleaner and remove the cover ②. Clean the cover thoroughly.
3. Remove the wing nut ③ from the air filter and remove the filter.
4. Remove the foam filter ④ from the paper filter ⑤.
5. Inspect both air-filter elements and replace them if they are damaged.

   Note: Always replace the paper air-filter element at the scheduled interval.
6. Clean the foam element as follows:
   A. Wash the foam element in a solution of liquid soap and warm water.

      Note: Squeeze to remove dirt, but do not twist the element because the foam may tear.

   B. Dry the element by wrapping in a clean rag. Squeeze the rag and foam element to dry, but do not twist the element because the foam may tear.

   C. Saturate the element with clean engine oil. Squeeze element to remove excess oil and to distribute oil thoroughly.
7. Clean the paper element by tapping the filter element several times on a hard surface or blow compressed air (not exceeding 2.07 bar (30 psi)) through the paper element from the inside.

   Note: Never try to brush off the dirt; brushing the paper element will force the dirt into the fibers.
8. Install the foam element, paper element, and air-cleaner cover.

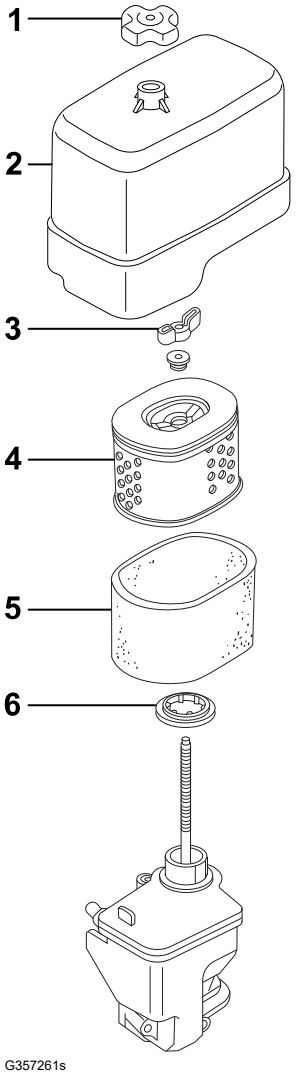

Engine Oil Service

Engine Oil Specifications

Crankcase capacity:	1.1 L (1.16 US qt)
Oil type:	API classification SJ or later.
Oil viscosity:	Selected the oil viscosity according to ambient temperature in the table below.
Over 13° C (40° F)	SAE 30 or 10W30
Below 13° C (40° F)	SAE 20 or 10W30

Engine Oil Service (continued)

Checking the Engine-Oil Level

1. Park the machine on a level surface and shut off the engine. Allow the engine to cool.
2. Unlatch and remove the cowl.
3. Clean around the oil filler cap/dipstick (2).

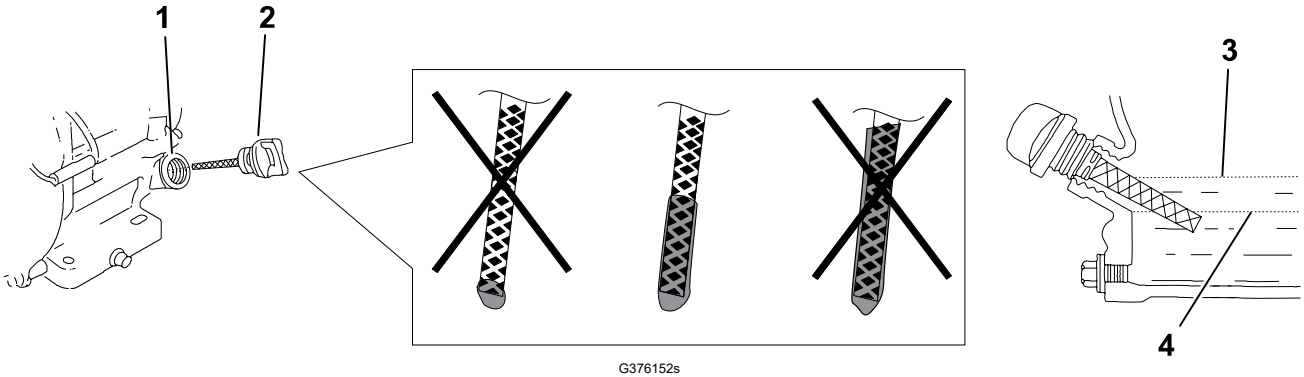

G376152s

4. Remove the oil filler cap/dipstick by rotating it counterclockwise.
5. Wipe the oil filler cap/dipstick clean and insert it into filler port (1).

   Note: Do not screw it into the port.

IMPORTANT

Do not overfill the crankcase with oil because the engine may be damaged.

6. Remove and check level of oil.

   Note: If oil level is near or below the lower limit mark (4) on the dipstick, add only enough of the specified oil to raise level to the upper limit mark (3) (bottom edge of the oil fill hole).
7. Check level of oil.
8. Install the oil filler cap/dipstick and wipe up any spilled oil.
9. Install the cowl and secure the latches.

Changing the Engine-Oil

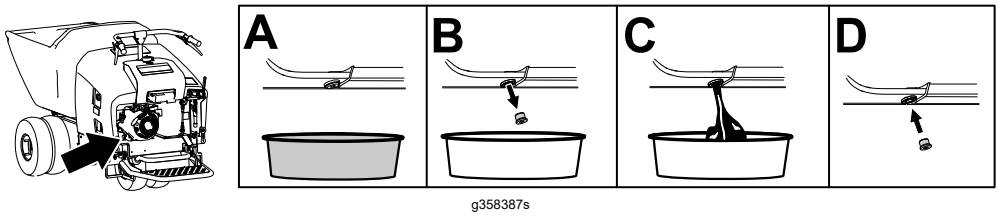

g358387s

1. Start the engine and let it run for 5 minutes.

   Note: This warms the oil so that it drains better.
2. Park the machine on a level surface, engage the parking brake, and shut off the engine.

Engine Oil Service (continued)

3. Have a funnel ready to place under the oil drain plug, then remove the plug and place the funnel under the plug to guide the oil into a container.

⚠ CAUTION ⚠

Components will be hot if the machine has been running. If you touch hot components, you may be burned.

Use care to avoid touching hot components while changing the oil and/or filter.

---

4. Install the drain plug and wipe away excess oil from the machine.
5. Fill the crankcase with the specified oil.
6. Dispose of the oil properly. Recycle the used oil according to local codes.

Replacing the Spark Plug

1. Remove the spark-plug wire.
2. Clean around spark plug and remove plug from cylinder head.

   Note: Replace a cracked, fouled, or dirty spark plug. Do not sand blast, scrape, or clean electrodes because engine damaged could result from grit entering the cylinder.

3. Set the air gap at 0.70 to 0.80 mm (0.028 to 0.031 inch) ①. Install the spark plug carefully by hand to avoid cross-threading.

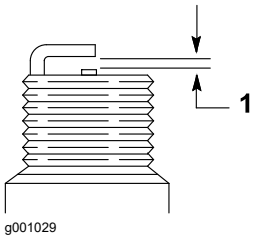

4. After the spark plug is seated, tighten it with a spark plug wrench to compress the sealing washer.
5. When installing a new spark plug, tighten 1/2 turn after the spark plug seats to compress the washer.
6. When installing the original spark plug, tighten 1/8 to 1/4 turn after the spark plug seats to compress the washer.

   Note: A loose spark plug can overheat and damage the engine. Overtightening the spark plug can damage the threads in the cylinder head.

7. Connect the spark-plug wire.

Cleaning the Blower Housing

To ensure proper cooling, ensure that the cooling fins and other external surfaces of the engine are kept clean at all times.

Ensure that the cooling shrouds are installed.

Cleaning the Blower Housing (continued)

IMPORTANT

Operating the engine with dirty or plugged cooling fins and/or cooling shrouds removed causes engine damage due to overheating.

Fuel System Maintenance

Cleaning the Sediment Cup

1. Move the fuel valve to the OFF position (1).
2. Remove the fuel sediment (3) cup and O-ring (2).
3. Wash the sediment cup and O-ring in nonflammable solvent, and dry them thoroughly.
4. Place the O-ring in the fuel valve, and install the sediment cup.
5. Tighten the sediment cup securely.

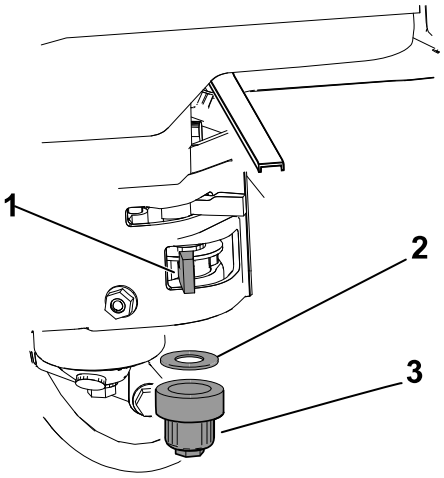

G357295s

Replacing the Fuel Filter

1. Park the machine on a level surface, shut off the engine, engage the parking brake, and allow the engine to cool.
2. Rotate the lever for the tank-shutoff valve (1) forward and up to the OFF position.
3. Start the engine and run the machine until the engine shuts off.
4. Rotate the engine switch (2) clockwise to the STOP position, and allow the engine to cool.
5. Remove the spark-plug wire.

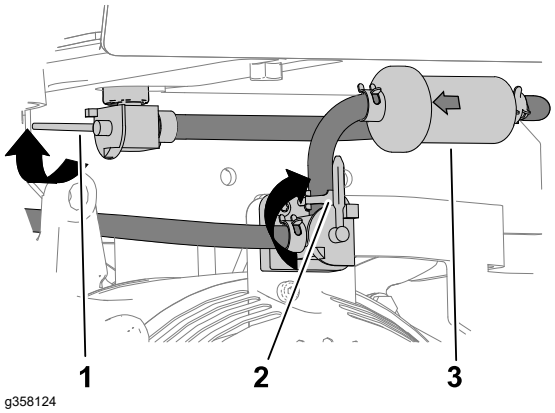

g358124

Replacing the Fuel Filter (continued)

6. Replace the filter (3).

   Note: Ensure that the flow-direction arrow on the replacement filter points toward the engine.

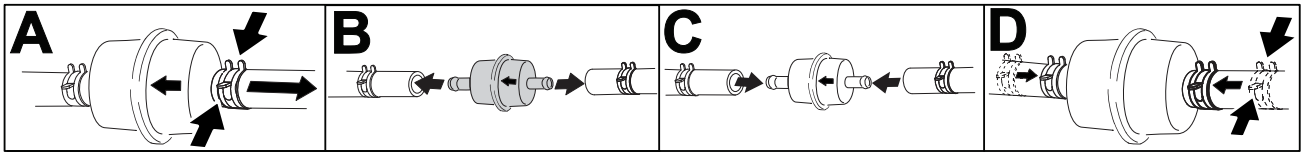

G376154

7. Connect the spark plug wire.
8. Open the tank shutoff valve and turn on the engine switch, and check for fuel leaks.

Draining the Fuel Tank

1. Park the machine on a level surface, shut off the engine, engage the parking brake, and allow the engine to cool.
2. Rotate the lever for the fuel tank shutoff valve (A) to the OFF position.
3. Remove the fuel sediment cup (B) and empty the fuel from it.
4. Move the fuel tank shutoff valve (C) to the ON position, and drain the fuel from the fuel tank into a suitable container.
5. Replace the sediment cup and tighten securely (D).
6. Loosen the drain screw (E) to drain fuel from the carburetor into a suitable container (F).
7. Install the drain screw (G) when the carburetor is drained.

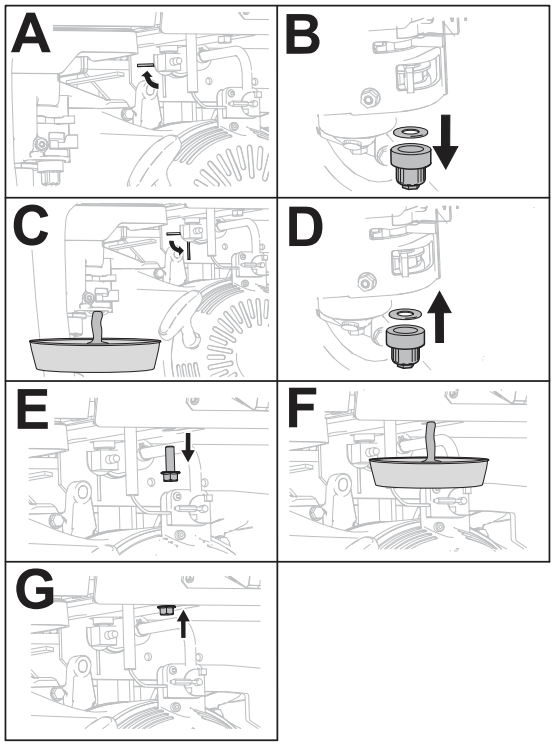

G357343

Drive System Maintenance

Checking the Transmission Neutral Position

If the machine creeps in any direction when you release the controls, adjust the transmission neutral position.

Checking the Transmission Neutral Position (continued)

1. Put the hopper in the dump position Ⓐ and shut off the engine.
2. Remove the cowl Ⓑ.
3. Remove the throttle lever cables at the transmission.
4. Lift the front wheels off the ground, and support the machine with a jack stand.
5. Start the machine. Increase the engine throttle to full speed while checking for front drive wheel rotation.

   Note: If the wheels rotate, proceed to the next step. If the wheels do not rotate, shut off the engine and install the control cables and cowl.
6. Note the directional movement of the front drive wheels. Shut off the engine.
7. Remove the hardware securing the screen to the frame Ⓒ and Ⓓ.
8. Remove the screen Ⓔ.
9. Remove the transmission cover plate Ⓕ.
10. Loosen the lock down screw Ⓖ until the return arm can be rotated.

    Note: If wheels rotate forward, rotate the return arm counterclockwise. If wheels rotate backward, rotate the return arm clockwise.
11. Tighten the lock down screw and check the front drive wheel rotation.

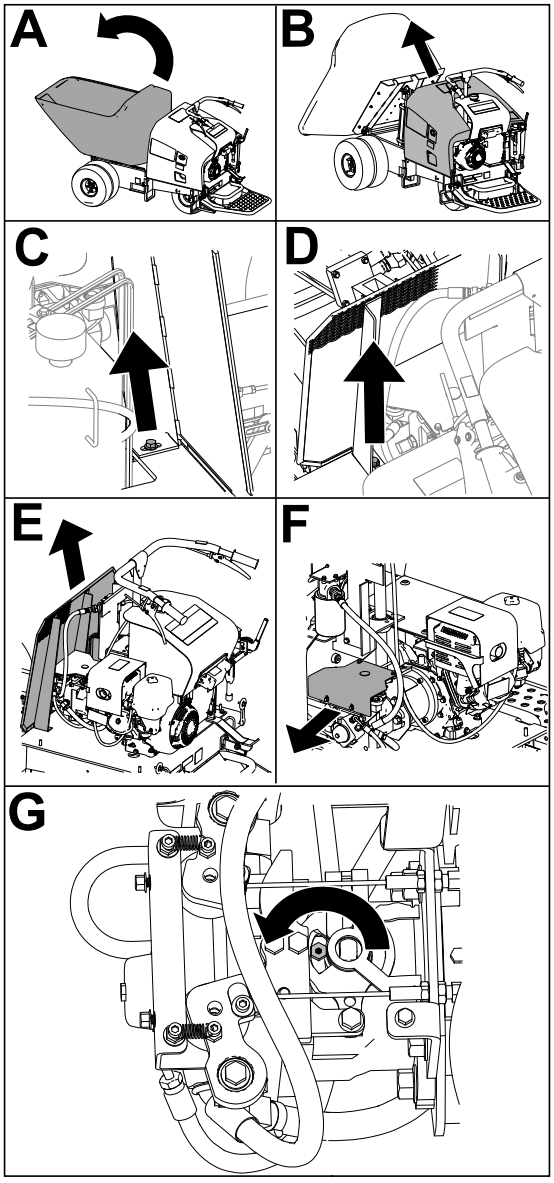

g358000

Inspecting the Tires

Inspect tires for cuts, slashes, or bulges. Tires with defects need to be replaced or repaired for proper handling and safety.

Torquing the Wheel Lug Nuts

Torque the lug nuts at the front and rear wheels in a crossing pattern to **122 N·m (90 ft-lb)**.

Brake Maintenance

Checking the Brake Pedal

1. Move the machine to a level, open area.
2. ENGAGE the parking brake and start the engine.
3. Set the engine throttle to the FAST position.
4. Step on the brake pedal (1).
5. DISENGAGE the parking brake.
6. Slowly squeeze the forward speed-control lever.

   The machine should not move forward and the engine should stall at full engagement of the speed control.

7. Release the speed-control lever.
8. If the machine moves forward or backward, bring the machine to an Authorized Service Dealer.

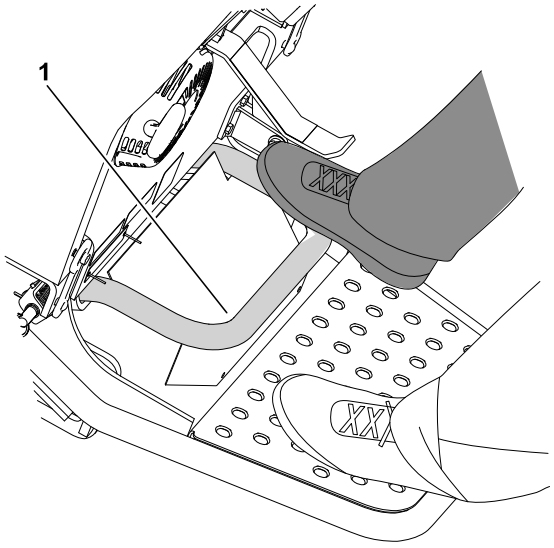

G356774

Checking the Parking Brake

1. Move the machine to a level, open area.
2. ENGAGE the parking brake and start the engine.
3. Set the engine throttle to the FAST position.
4. Slowly squeeze the forward speed-control lever.

   The machine should not move forward and the engine should stall at full engagement of the speed control. If the machine moves forward, adjust the parking brake.

5. Release the speed-control lever.
6. Disengage the parking brake.
7. Slowly squeeze the forward speed-control lever.

   The machine should move forward. If the machine does not move forward, adjust the parking brake.

8. Repeat the steps above for the reverse speed control lever.
9. Step on the brake pedal, engage the parking brake, and shut off the engine.

Adjusting the Parking Brake

1. Shut off the engine.

Adjusting the Parking Brake (continued)

2. Step on the brake pedal.
3. Disengage the parking brake.
4. Rotate the knob (1) to adjust the parking brake.
   - Counterclockwise—loosen
   - Clockwise—tighten

   Note: Rotate the knob no more than 1 revolution each time.
5. Test the parking brake.
6. Repeat steps above until the machine does not move forward.

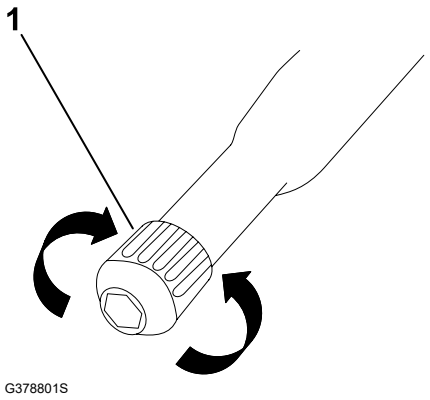

Hydraulic System Maintenance

Hydraulic Fluid Specifications

Hydraulic-Fluid type:	Mobil 424 Hydraulic Oil or equivalent
Hydraulic fluid capacity:	28.4 L (30 US qt)

The machine hydraulic tank is filled at the factory with approximately 28.4 L (30 US qt) of hydraulic fluid.

Use only 1 of the following fluids in the hydraulic system:

- **Toro Premium Transmission/Hydraulic Tractor Fluid** (refer to your Authorized Service Dealer for more information)
- **Toro PX Extended Life Hydraulic Fluid** (refer to your Authorized Service Dealer for more information)
- If either of the above Toro fluids are not available, you may use another **Universal Tractor Hydraulic Fluid (UTHF)**, but they must be only **conventional, petroleum-based** products. The specifications must fall within the listed range for all the following material properties and the fluid should meet the listed industry standards. Check with your hydraulic fluid supplier to determine if the fluid meets these specifications.

  Note: Toro will not assume responsibility for damage caused by improper substitutions, so use only products from reputable manufacturers who will stand behind their recommendations.

Material Properties	
Viscosity, ASTM D445	cSt at 40°C: 55 to 62
	cSt at 100°C: 9.1 to 9.8
Viscosity index, ASTM D2270	140 to 152
Pour Point, ASTM D97	-37 to -43°C (-35 to -46°F)

Hydraulic Fluid Specifications (continued)

Industry Standards
API GL-4, AGCO Powerfluid 821 XL, Ford New Holland FNHA-2-C-201.00, Kubota UDT, John Deere J20C, Vickers 35VQ25 and Volvo WB-101/BM

Note: Many hydraulic fluids are almost colorless, making it difficult to spot leaks. A red dye additive for the hydraulic system fluid is available in 20 ml (2/3 fl oz) bottles. One bottle is sufficient for 15 to 22 L (4 to 6 US gallons) of hydraulic fluid. Order Part No. 44-2500 from your Authorized Toro Dealer.

Checking the Hydraulic Fluid

⚠ CAUTION ⚠

The hydraulic breather/filler cap is designed to pressurize the reservoir to 34 kPa (5 psi).

Loosen the cap slowly to avoid injury whenever adding oil or working on the hydraulic system. Use a wrench on the hex directly under the cap.

1. Park the machine on a level surface, lower the hopper, shut off the engine, and allow the engine to cool.
2. Check the fluid level on the sight gauge.

   Note: When the fluid level is correct, the fluid level will cover 25% to 75% of the window in the sight gauge.
3. If the fluid level is low, add enough of the specified hydraulic to raise it to the proper level.
   A. Unlatch and remove the cowl.
   B. Slowly loosen the hex nut (1) on the bottom of the cap (2).
   C. Add the fluid to the hydraulic tank.
   D. Install the breather/filler cap and wipe up any spilled fluid.
   E. Install and latch the cowl.

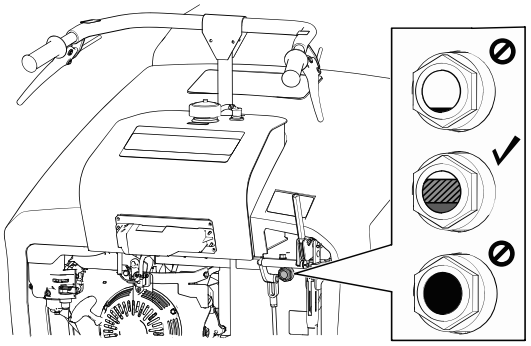

G358709

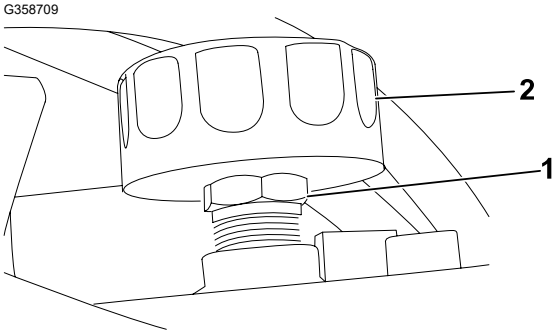

G376172

Changing the Hydraulic Fluid

1. Park the machine on a level surface, shut off the engine, and allow the engine to cool.
2. Unlatch and remove the cowl.

Changing the Hydraulic Fluid (continued)

3. Slowly loosen the hex nut on the bottom of the cap.

⚠ CAUTION ⚠

The hydraulic breather/filler cap is designed to pressurize the reservoir to 34 kPa (5 psi).

Loosen the cap slowly to avoid injury whenever adding oil or working on the hydraulic system. Use a wrench on the hex directly under the cap.

4. Place a large drain pan under the drain plug located at the bottom of the hydraulic tank.
5. Remove the drain plug and allow the oil to drain into the pan.
6. Install and tighten the drain plug.

   Note: Dispose of the used oil at a certified recycling center.
7. Fill the hydraulic tank with the proper hydraulic fluid.
8. Start the engine and let it run for a 2 to 3 minutes.
9. Shut off the engine.
10. Check the hydraulic fluid level and add more fluid if necessary.
11. Install the cowl and secure the latches.

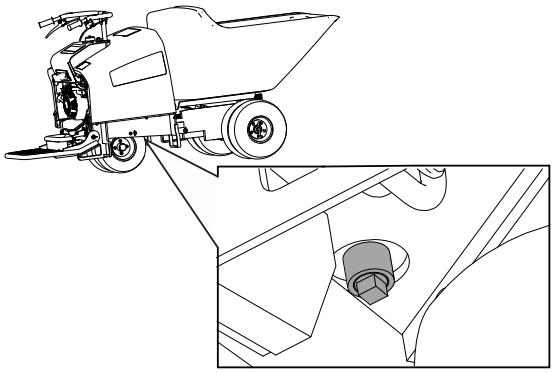

g358361

Replacing the Hydraulic Filter

IMPORTANT

Do not use an automotive oil filter or severe hydraulic system damage may result.

1. Park the machine on a level surface, shut off the engine, and allow the engine to cool.
2. Unlatch and remove the cowl.

Replacing the Hydraulic Filter (continued)

3. Place a drain pan under the filter and replace it as shown:

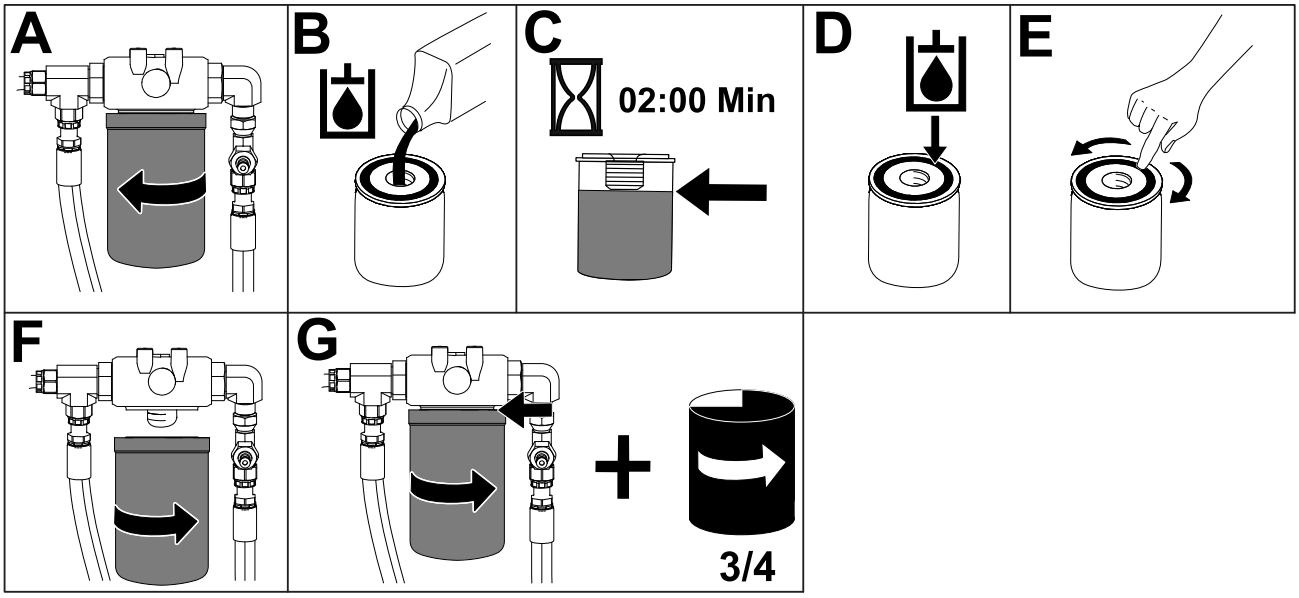

4. Clean up any spilled fluid.
5. Start the engine and let it run for 2 minutes to purge air from the system.
6. Shut off the engine and check for leaks.
7. Check the fluid level in the hydraulic tank.
8. Install the cowl and secure the latches.

Checking the Hydraulic Lines

Check the hydraulic lines for leaks, loose fittings, kinked lines, loose mounting supports, wear, and deterioration. Make necessary repairs before operating.

Cleaning

Removing Debris

IMPORTANT

Operating the engine with blocked screens, dirty or plugged cooling fins, and/or cooling shrouds removed, will result in engine damage from overheating.

1. Park the machine on a level surface and shut off the engine. Allow the engine to cool.
2. Unlatch and remove the cowl.
3. Clean any debris from under the hopper.

Removing Debris (continued)

4. Wipe away debris from the air cleaner.
5. Clean any debris buildup on the engine and in the transmission with a brush or blower.

IMPORTANT

It is preferable to blow dirt out rather than washing it out. If you use water, keep it away from electrical items and hydraulic valves.

Do not use a high-pressure washer. High-pressure washing can damage the electrical system and hydraulic valves or deplete grease.

Storage Safety

- Shut off the engine, remove the key (if applicable), wait for all moving parts to stop, and allow the machine to cool before storing it.
- Do not store the machine or fuel near flames.

Preparing the Machine for Storage Over 30 Days

1. Park the machine on a level surface, engage the parking brake, and lower the hopper.
2. Shut off the engine and remove the key.
3. Remove dirt and grime from the entire machine.

IMPORTANT

You can wash the machine with mild detergent and water. Do not pressure-wash the machine. Avoid excessive use of water, especially near the control panel, engine, hydraulic pumps, and motors.

4. Service the air cleaner.
5. Grease the machine.
6. Change the engine oil.

7. Prepare the fuel system.
   A. Add a petroleum-based fuel stabilizer/conditioner to the fuel in the tank. **Do not use an alcohol-based stabilizer (ethanol or methanol).**
   B. Run the engine to distribute conditioned fuel through the fuel system for 5 minutes.
   C. Shut off the engine, allow it to cool, and drain the fuel tank using a pump-type syphon.
   D. Start the engine and run it until it shuts off.
   E. Choke the engine.
   F. Start and run the engine until it does not start again.
   G. Dispose of fuel properly. Recycle as per local codes.

IMPORTANT

Do not store fuel containing stabilizer/conditioner longer than the duration recommended by the fuel-stabilizer manufacturer.

8. Prepare the engine.
   A. With the spark plugs removed from the engine, pour 2 tablespoons of engine oil into the spark plug holes.
   B. Place a rag over the spark plug holes to catch any oil spray, then turn the key to crank the engine and distribute the oil inside the cylinder.
   C. Install the spark plugs.

      Note: Do not install the wire on the spark plugs.
9. Check and tighten all fasteners. Repair or replace any worn, damaged, or missing parts.
10. Paint all scratched or bare metal surfaces with paint available from your Authorized Service Dealer.
11. Store the machine in a clean, dry garage or storage area. Remove the key from the ignition switch and keep it in a memorable place.
12. Cover the machine to protect it and keep it clean.

The engine does not start.

Possible Cause	Corrective Action
The On/Off switch is in the OFF position.	Move the switch to the ON position.
The fuel-shutoff valve is closed.	Open the fuel-shutoff valve.
The engine oil is low. Before the oil level in the crankcase can fall below a safe limit, the oil alert system will automatically shut off the engine.	Check the engine oil.
The choke is open.	Close the choke when starting a cold engine.
The fuel tank is empty.	Fill the tank with fresh fuel.
The spark plug wire is loose or disconnected.	Check the electrode gap and clean or replace the spark plug.

The engine runs rough.

Possible Cause	Corrective Action
The choke is closed.	Open the choke.
The air filter is clogged.	Clean or replace the air filter. .
The fuel line is clogged.	Clean the sediment cup.
There is water or contaminants in the fuel.	Drain the fuel tank and fill it with fresh fuel.
The spark plugs are worn or have buildup on the electrodes.	Check the electrode gap and clean or replace the spark plug.

The machine does not drive.

Possible Cause	Corrective Action
The hydraulic-fluid in the transmission is low.	Add hydraulic fluid to the hydraulic fluid expansion tank.
Air is in the hydraulic system.	Bleed the air out the hydraulic system.
The parking brake is engaged.	Disengage the parking brake.

The machine does not stop.

Possible Cause	Corrective Action
The hydraulic or transmission system is damaged.	Contact your Authorized Service Dealer.

California Proposition 65 Warning Information

What is this warning?

You may see a product for sale that has a warning label like the following:



WARNING: Cancer and Reproductive Harm—www.p65Warnings.ca.gov.

What is Prop 65?

Prop 65 applies to any company operating in California, selling products in California, or manufacturing products that may be sold in or brought into California. It mandates that the Governor of California maintain and publish a list of chemicals known to cause cancer, birth defects, and/or other reproductive harm. The list, which is updated annually, includes hundreds of chemicals found in many everyday items. The purpose of Prop 65 is to inform the public about exposure to these chemicals.

Prop 65 does not ban the sale of products containing these chemicals but instead requires warnings on any product, product packaging, or literature with the product. Moreover, a Prop 65 warning does not mean that a product is in violation of any product safety standards or requirements. In fact, the California government has clarified that a Prop 65 warning "is not the same as a regulatory decision that a product is 'safe' or 'unsafe.'" Many of these chemicals have been used in everyday products for years without documented harm. For more information, go to https://oag.ca.gov/prop65/faqs-view-all.

A Prop 65 warning means that a company has either (1) evaluated the exposure and has concluded that it exceeds the "no significant risk level"; or (2) has chosen to provide a warning based on its understanding about the presence of a listed chemical without attempting to evaluate the exposure.

Does this law apply everywhere?

Prop 65 warnings are required under California law only. These warnings are seen throughout California in a wide range of settings, including but not limited to restaurants, grocery stores, hotels, schools, and hospitals, and on a wide variety of products. Additionally, some online and mail order retailers provide Prop 65 warnings on their websites or in catalogs.

How do the California warnings compare to federal limits?

Prop 65 standards are often more stringent than federal and international standards. There are various substances that require a Prop 65 warning at levels that are far lower than federal action limits. For example, the Prop 65 standard for warnings for lead is 0.5 µg/day, which is well below the federal and international standards.

Why don't all similar products carry the warning?

- Products sold in California require Prop 65 labelling while similar products sold elsewhere do not.
- A company involved in a Prop 65 lawsuit reaching a settlement may be required to use Prop 65 warnings for its products, but other companies making similar products may have no such requirement.
- The enforcement of Prop 65 is inconsistent.
- Companies may elect not to provide warnings because they conclude that they are not required to do so under Prop 65; a lack of warnings for a product does not mean that the product is free of listed chemicals at similar levels.

Why does Toro include this warning?

Toro has chosen to provide consumers with as much information as possible so that they can make informed decisions about the products they buy and use. Toro provides warnings in certain cases based on its knowledge of the presence of one or more listed chemicals without evaluating the level of exposure, as not all the listed chemicals provide exposure limit requirements. While the exposure from Toro products may be negligible or well within the "no significant risk" range, out of an abundance of caution, Toro has elected to provide the Prop 65 warnings. Moreover, if Toro does not provide these warnings, it could be sued by the State of California or by private parties seeking to enforce Prop 65 and subject to substantial penalties.

Notes:

Notes:


TORO®