Form No. 3447-971 Rev A

48in or 52in Recycler® Kit

Model No. 139-6650

Model No. 139-6653

Installation Instructions

Important: **This kit does not come with the recycler blades.**

Loose Parts

Use the chart below to verify that all parts have been shipped.

Procedure	Description	Qty.	Use
1	No parts required	–	Raise the mower for access (GrandStand mowers only).
2	No parts required	–	Prepare the machine.
3	No parts required	–	Remove the existing baffles (for mower decks with existing baffles).
4	No parts required	–	Remove the deck fasteners and discharge baffle (for Z Master 4000 mower deck).
5	No parts required	–	Remove the existing discharge chute.
6	No parts required	–	Drill holes (for G3 mower decks).
7	Discharge plate Carriage bolt (3/8 x 1-1/4 inches) Carriage bolt (5/16 x 7/8 inch) Flange nut (small flange) (3/8 inch) Flange nut (5/16 inch)	1 2 1 2 1	Install the discharge plate.
8	Left baffle Center baffle Right baffle Small flange nut (3/8 inch) Carriage bolt (3/8 x 1 inch) Bolt (3/8 x 1 inch) Large flange nut (3/8 inch)	1 1 1 7 7 2 2	Install the baffles (for 48-inch mower decks).
9	Left baffle Center baffle Right baffle Flange nut (small flange) (3/8 inch) Carriage bolt (3/8 x 1 inch) Bolt (3/8 x 1 inch) Flange nut (large flange) (3/8 inch)	1 1 1 8 7 2 1	Install the baffles (for 52-inch mower decks).
10	No parts required	–	Tighten all the fasteners.
11	Recycler blade (sold separately)	3	Install the recycler blades.

© 2021—The Toro® Company
8111 Lyndale Avenue South
Bloomington, MN 55420

Register at www.Toro.com.

Original Instructions (EN)
Printed in the USA
All Rights Reserved

3447-971

1

Raising the Mower for Access

GrandStand Mowers Only

No Parts Required

Procedure

You can raise the front of the mower and support to access under the machine for maintenance.

⚠ WARNING

The machine could fall onto someone and cause serious injury or death.

- **Always shut off the engine, engage the parking brake, and remove the key before performing any maintenance on the mower.**
- **Use extreme caution when the machine is raised and supported on its back. The blades and moving parts are exposed and could cause injury.**
- **Use this position only for cleaning, removing blades or baffles, and maintenance.**

1. Park the machine on a level surface, disengage the PTO, and engage the parking brake.
2. Shut off the engine, remove the key, and wait for all moving parts to stop before leaving the operating position.
3. Remove the battery from the machine; refer to the *Operator's Manual*.
4. Raise the mower deck to the highest position.
5. Drain the fuel from the fuel tank; refer to Draining the Fuel Tank in the *Operator's Manual*.
6. Remove the hydraulic-tank cap and place a piece of plastic over the opening and install the cap.

   This seals the hydraulic tank and prevents fluid from leaking.

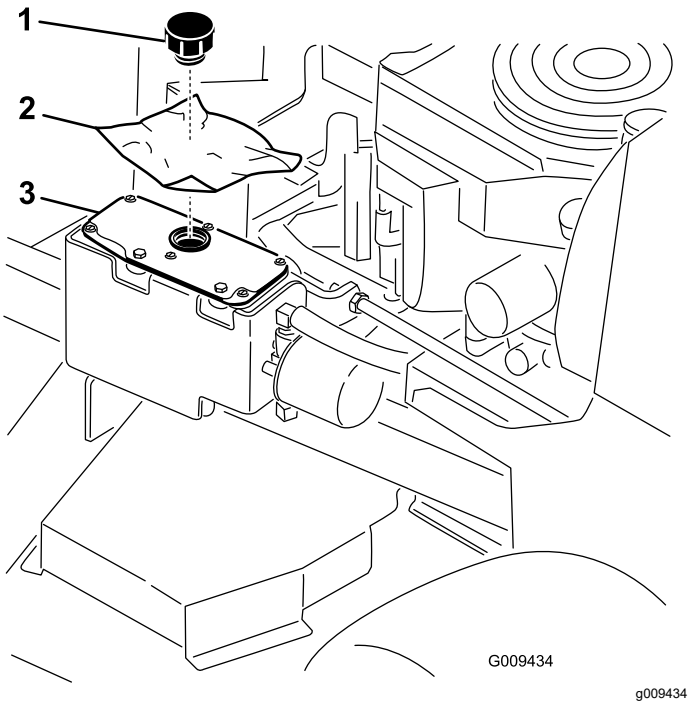

Figure 1

Grandstand mowers only

1. Cap
2. Piece of plastic
3. Hydraulic tank

7. With 2 people, raise the front of the mower so that it rests on the drive tires and with the platform in the upright position.

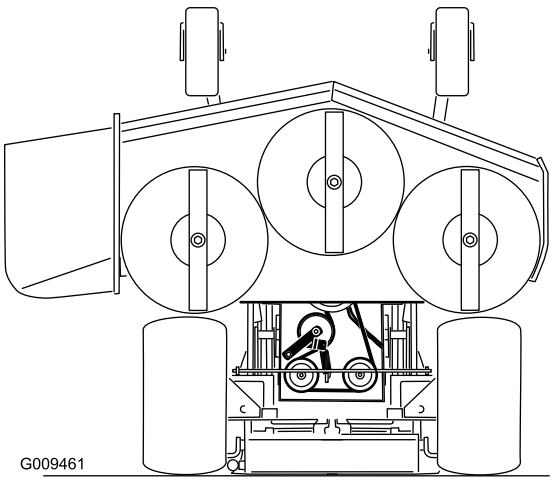

Figure 2

GrandStand mowers only

1. Ensure that you remove the battery.
2. With two people, lift the front end of the mower (ensure the mower deck is in the highest position)

2

Preparing the Machine

No Parts Required

Procedure

1. Disengage the PTO, move the motion-control levers to the NEUTRAL-LOCK position, and engage the parking brake.
2. Shut off the engine, remove the key, and wait for all moving parts to stop before leaving the operating position.
3. Repair all bent or damaged areas of mower deck and replace any missing parts.
4. Clean the machine of any debris on the deck to ease installation.
5. Remove the existing blades; refer to the *Operator's Manual*.

3

Removing the Existing Baffles

For Mower Decks with Existing Baffles

No Parts Required

Procedure

Note: Remove the nuts first before removing the bolts.

1. Remove the flange nuts holding the baffles in place (Figure 3).
2. Remove the cam lock and washer by unscrewing it from the adjustable flow baffle (Figure 3).

   Note: For certain models of mower decks, remove the nut, knob, and washer if a cam lock is not present.
3. Remove the bolts holding the baffles in place (Figure 3).

   Note: Save the baffles and hardware.
4. After removing the discharge baffle, install the nuts and bolts back into the mower deck (Figure 3).

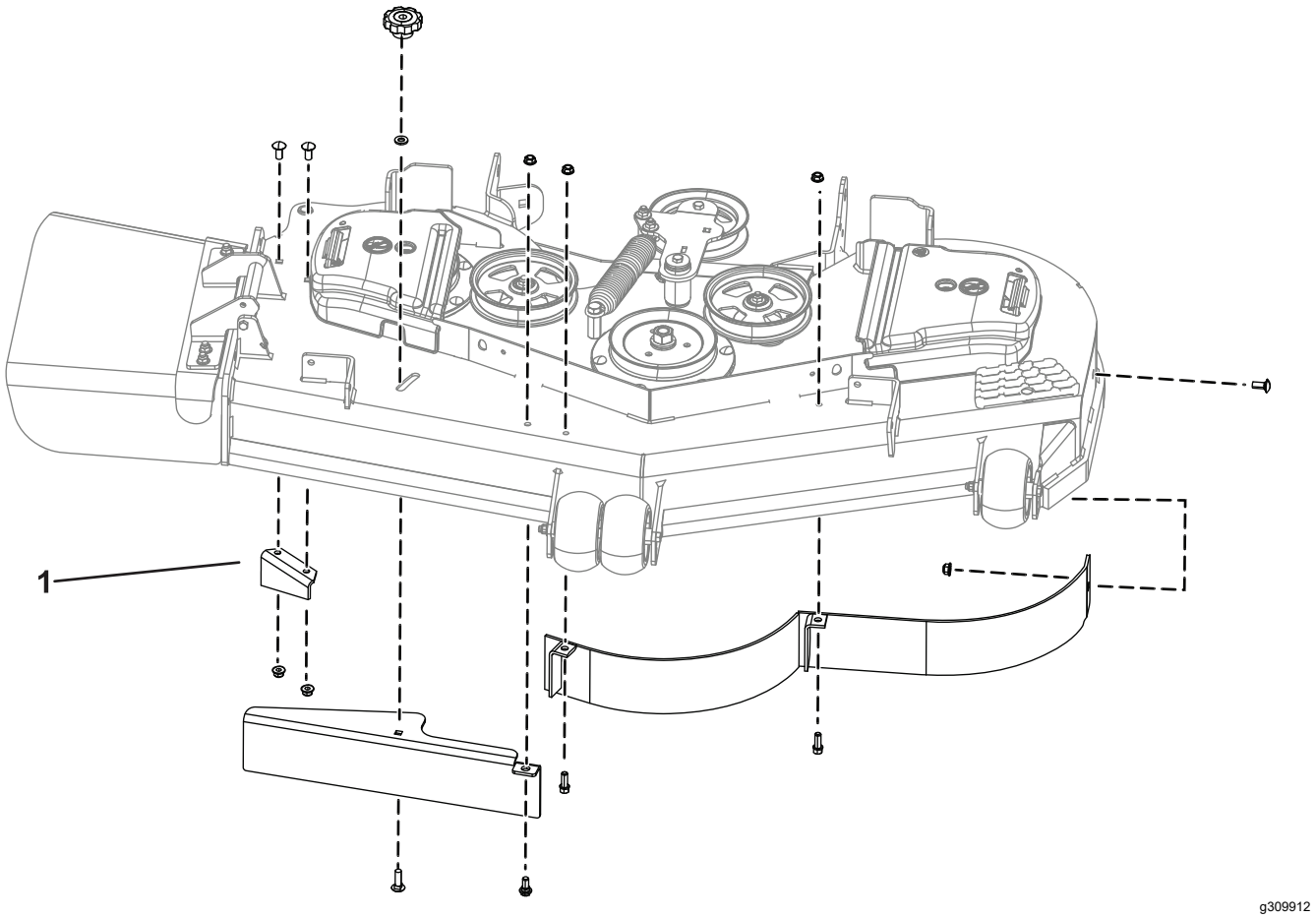

Figure 3

1. Discharge baffle

4

Removing the Deck Fasteners and Discharge Baffle

For Z Master 4000 Mower Decks

No Parts Required

Procedure

Remove the 6 carriage bolts (3/8 x 7/8 inch), 6 locknuts (3/8 inch), and discharge baffle from the mower deck (Figure 4).

After removing the discharge baffle, install the 2 carriage bolts (3/8 x 7/8 inch) and 2 locknuts (3/8 inch) back into the mower deck (Figure 4).

Retain the fasteners and discharge baffle for converting back to side discharge.

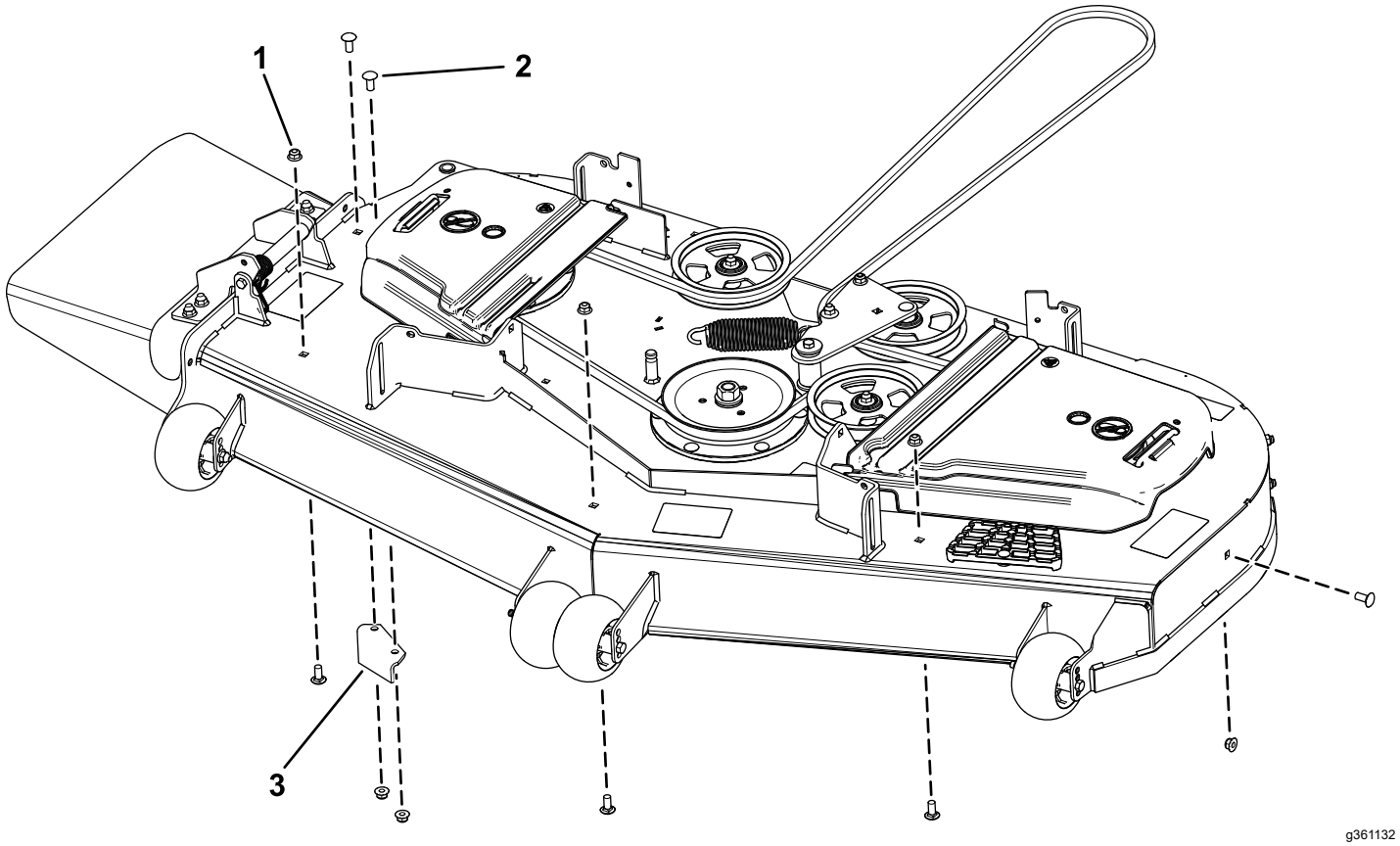

Figure 4

1. Locknut (3/8 inch)
2. Carriage bolt (3/8 x 7/8 inch)
3. Discharge baffle

5

Removing the Existing Discharge Chute

No Parts Required

Procedure

1. Remove the locknut, bolt, spring, and spacer holding the deflector to the pivot brackets (Figure 5).
2. Remove the grass deflector (Figure 5).

   Note: Retain the hardware that you removed during this procedure so that it is available for changeover.

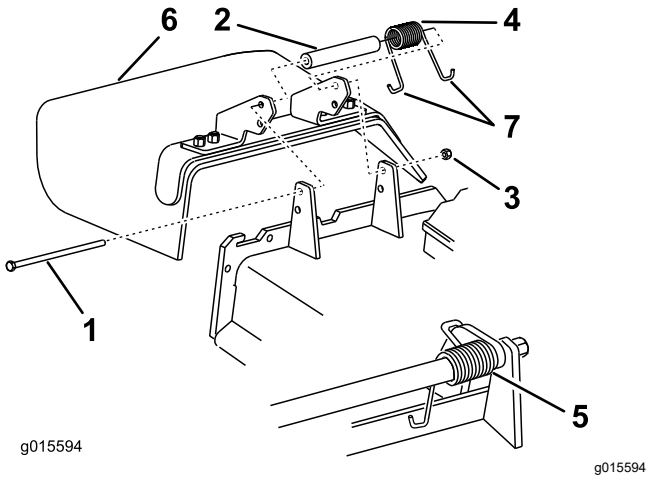

Figure 5

1. Bolt
2. Spacer
3. Locknut
4. Spring
5. Spring installed
6. Grass deflector
7. J-hook end of spring

6

Drilling Holes

For G3 Mower Decks

No Parts Required

Procedure

1. Check the hole diameters in the locations shown in Figure 6.
2. If there are no holes in the side discharge mounting bracket, use the discharge plate as a template and mark the location of the holes.

   Note: For the upper rear hole, use the upper part of the slot to mark the location of the hole. This will allow for clearance of the nut when the discharge plate is installed.
3. Drill the holes to the specified diameter in the locations shown in Figure 6.

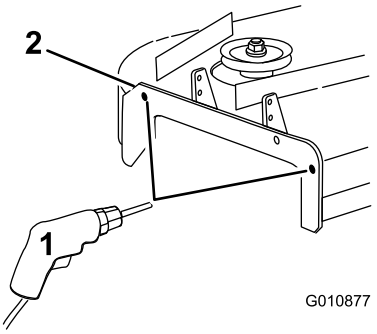

Figure 6

1. Drill this hole to 7/16 inch diameter
2. Side discharge mounting bracket

7

Installing the Discharge Plate

Parts needed for this procedure:

1	Discharge plate
2	Carriage bolt (3/8 x 1-1/4 inches)
1	Carriage bolt (5/16 x 7/8 inch)
2	Flange nut (small flange) (3/8 inch)
1	Flange nut (5/16 inch)

Procedure

1. Install the discharge plate to the outside of the mounting bracket with 2 carriage bolts (3/8 x 1-1/4 inches) and 2 flange nuts (small flange) (3/8 inch) as shown in Figure 7.
2. Install the tab to the inside of the mower deck with 1 carriage bolt (5/16 x 7/8 inch) and 1 flange nut (5/16 inch) (small flange) as shown in Figure 7.

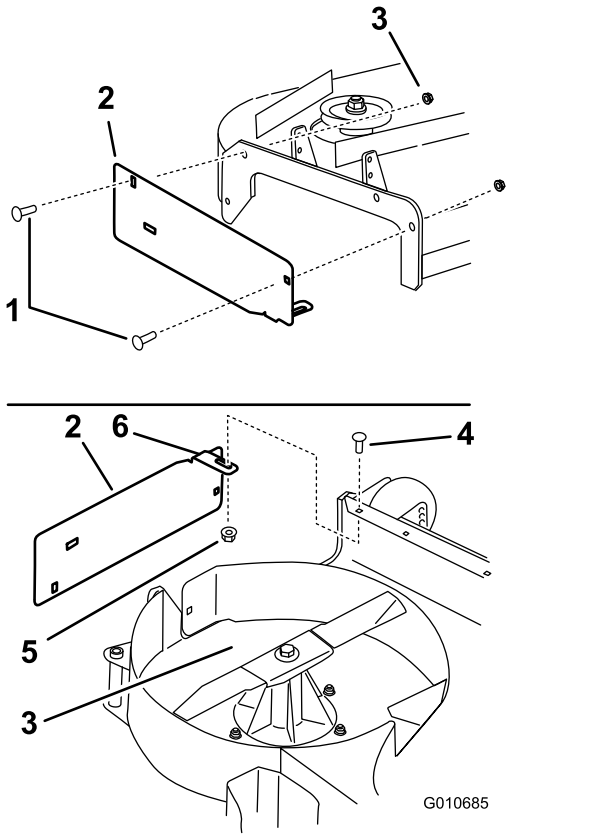

Figure 7

1. Carriage bolt (3/8 x 1-1/4 inches)
2. Discharge plate
3. Flange nut (small flange) (3/8 inch)
4. Carriage bolt (5/16 x 7/8 inch)
5. Flange nut (5/16 inch)
6. Ensure the tab is positioned inside the mower deck

8

Installing the Baffles

For 48-inch Mower Decks

Parts needed for this procedure:

1	Left baffle
1	Center baffle
1	Right baffle
7	Small flange nut (3/8 inch)
7	Carriage bolt (3/8 x 1 inch)
2	Bolt (3/8 x 1 inch)
2	Large flange nut (3/8 inch)

Procedure

Note: Loosely install the baffles to align the baffles with all holes in the mower (Figure 8).

1. Position the right baffle into the mower.
2. Loosely install the right baffle to the discharge plate with 1 carriage bolt (3/8 x 1 inch) and a small flange nut (3/8 inch) as shown in Figure 8.
3. Loosely install the right baffle to the top of the mower deck with 1 carriage bolt (3/8 x 1 inch) and 1 large flange nut (3/8 inch) as shown in Figure 8.

   Refer to Figure 9 for the position of the baffles.
4. Loosely install the right baffle to the mower deck with 1 carriage bolt (3/8 x 1 inch) and 1 small flange nut (3/8 inch) as shown in Figure 8.
5. Position the left baffle into the mower.
6. Loosely install the left baffle to the top of the mower deck with 1 bolt (3/8 x 1 inch) and 1 small flange nut (3/8 inch) as shown in Figure 8.

   Refer to Figure 9 for the position of the baffles.
7. Loosely install the left baffle to the mower deck with 1 carriage bolt (3/8 x 1 inch) and 1 small flange nut (3/8 inch) as shown in Figure 8.
8. Loosely install the left baffle to the side of the mower deck with 1 carriage bolt (3/8 x 1 inch) and 1 large flange nut (3/8 inch) as shown in Figure 8.

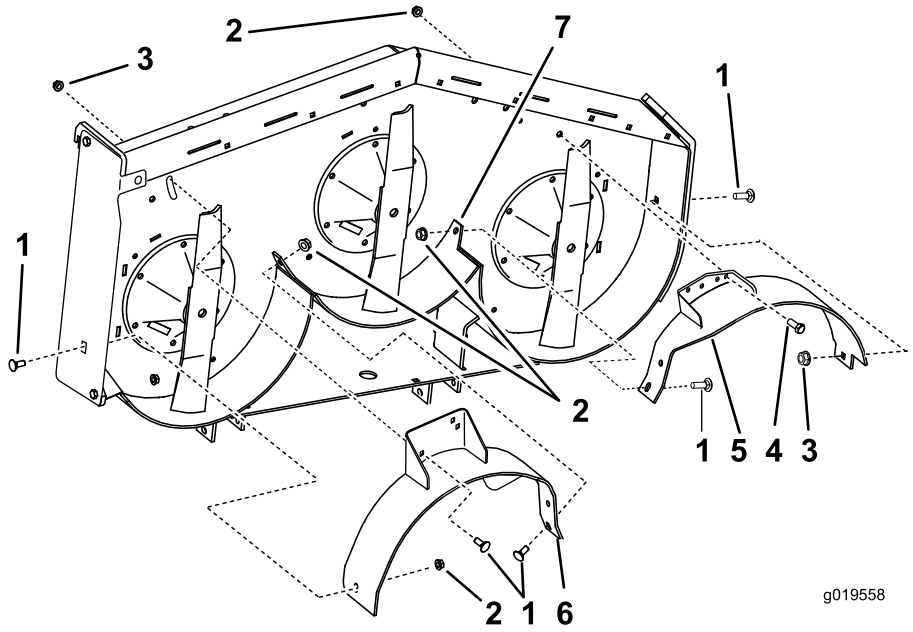

g019558

Figure 8

1. Carriage bolt (3/8 x 1 inch)
2. Flange nut (small flange) (3/8 inch)
3. Flange nut (large flange) (3/8 inch)
4. Bolt (3/8 x 1 inch)
5. Left baffle
6. Right baffle
7. Welded baffle

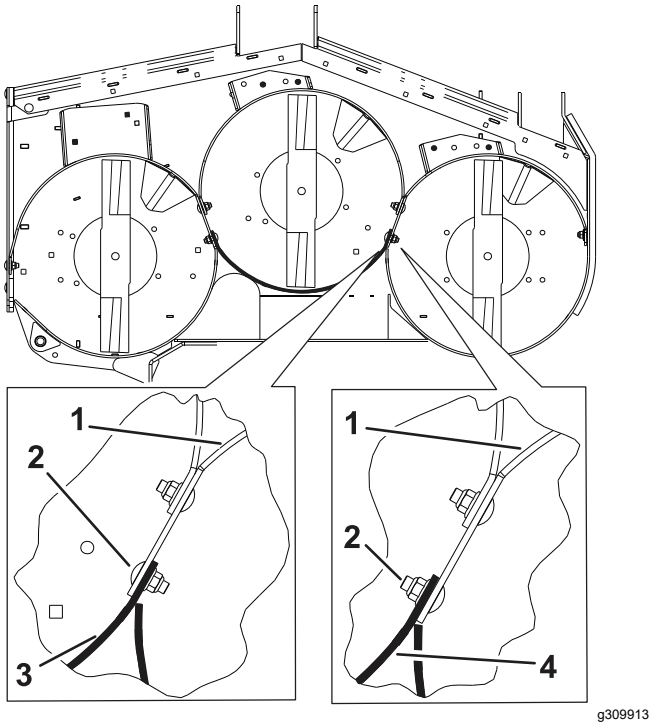

Figure 9
48-inch mower deck shown

1. Left baffle
2. Note the position of the hardware (48-inch mowers only)
3. Welded baffle for GrandStand Mowers
4. Welded baffle for G3 Z Master Mowers

9. Position the center baffle into the mower.
10. Loosely install the center baffle to the left baffle with 1 carriage bolt (3/8 x 1 inch) and 1 flange nut (small flange) (3/8 inch) as shown in Figure 10.

    Refer to Figure 9 for the position of the baffles.
11. Loosely install the center baffle to the right baffle with 1 carriage bolt (3/8 x 1 inch) and 1 flange nut (small flange) (3/8 inch) as shown in Figure 10.
12. Loosely install the center baffle to the top of the mower deck with 1 bolt (3/8 x 1 inch) and 1 flange nut (small flange) (3/8 inch) as shown in Figure 10.

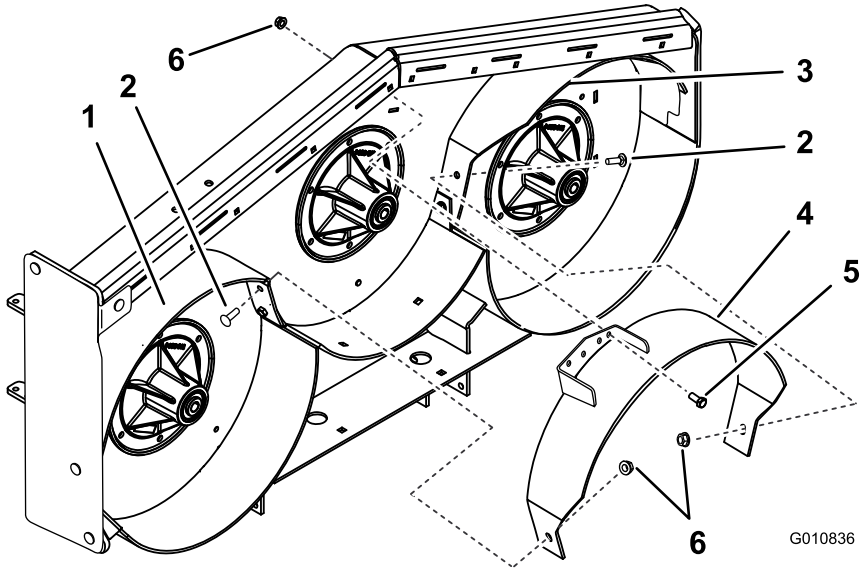

Figure 10
GrandStand mower deck shown

1. Right baffle
2. Carriage bolt (3/8 x 1 inch)
3. Left baffle
4. Center baffle
5. Bolt (3/8 x 1 inch)
6. Flange nut (small flange) (3/8 inch)

9

Installing the Baffles

For 52-inch Mower Decks

Parts needed for this procedure:

1	Left baffle
1	Center baffle
1	Right baffle
8	Flange nut (small flange) (3/8 inch)
7	Carriage bolt (3/8 x 1 inch)
2	Bolt (3/8 x 1 inch)
1	Flange nut (large flange) (3/8 inch)

Procedure

Note: Loosely install the baffles to align the baffles with all holes in the mower (Figure 8).

1. Position the right baffle into the mower.
2. Loosely install the right baffle to the discharge plate with 1 carriage bolt (3/8 x 1 inch) and a flange nut (small flange) (3/8 inch) as shown in Figure 11.
3. Loosely install the right baffle to the top of the mower deck with 1 carriage bolt (3/8 x 1 inch) and 1 flange nut (large flange), (3/8 inch) as shown in Figure 11.
4. Loosely install the right baffle to the mower deck with 1 carriage bolt (3/8 x 1 inch) and 1 flange nut (small flange) (3/8 inch) as shown in Figure 11.
5. Position the left baffle into the mower.
6. Loosely install the left baffle to the top of the mower deck with 1 bolt (3/8 x 1 inch) and 1 flange nut (small flange) (3/8 inch) as shown in Figure 11.
7. Loosely install the left baffle to the mower deck with 1 carriage bolt (3/8 x 1 inch) and 1 flange nut (small flange) (3/8 inch) as shown in Figure 11.
8. Loosely install the left baffle to the side of the mower deck with 1 carriage bolt (3/8 x 1 inch) and 1 flange nut (small flange) (3/8 inch) as shown in Figure 11.

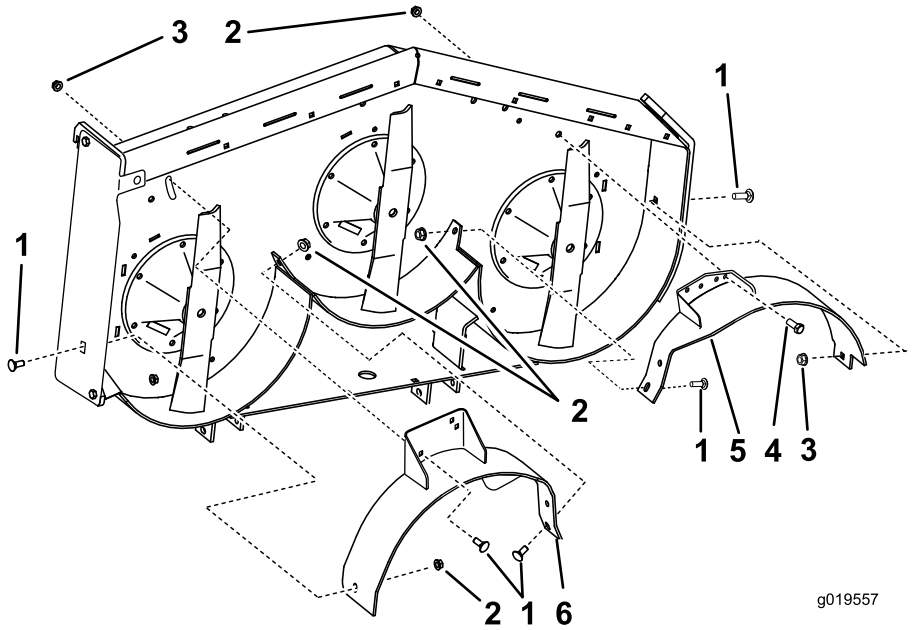

g019557

Figure 11

1. Carriage bolt (3/8 x 1 inch)
2. Flange nut (small flange) (3/8 inch)
3. Flange nut (large flange) (3/8 inch)
4. Bolt (3/8 x 1 inch)
5. Left baffle
6. Right baffle

9. Position the center baffle into the mower.
10. Loosely install the center baffle to the left baffle with 1 carriage bolt (3/8 x 1 inch) and 1 flange nut (small flange) (3/8 inch) as shown in Figure 12.
11. Loosely install the center baffle to the right baffle with 1 carriage bolt (3/8 x 1 inch) and 1 flange nut (small flange) (3/8 inch) as shown in Figure 12.

12. Loosely install the center baffle to the top of the mower deck with 1 bolt (3/8 x 1 inch) and 1 flange nut (small flange) (3/8 inch) as shown in Figure 12.

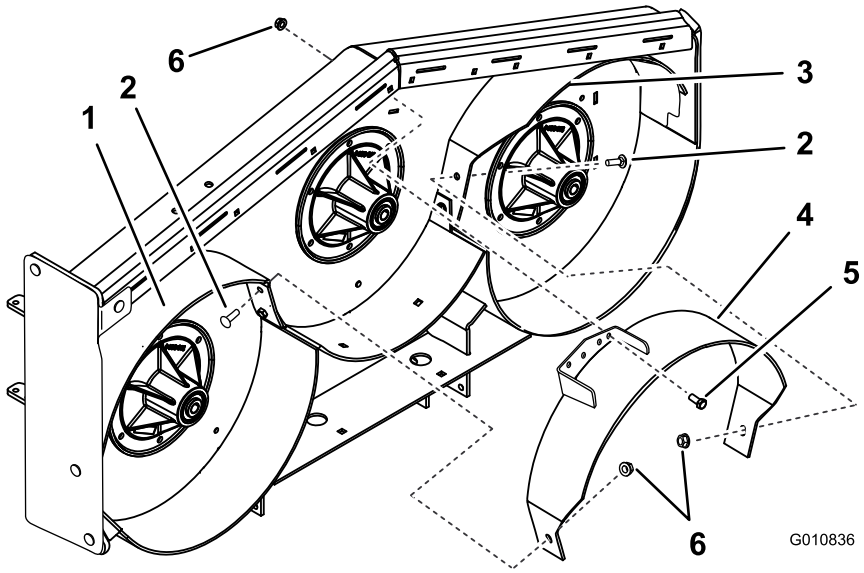

g010836

Figure 12
GrandStand mower deck shown

1. Right baffle
2. Carriage bolt (3/8 x 1 inch)
3. Left baffle
4. Center baffle
5. Bolt (3/8 x 1 inch)
6. Flange nut (small flange) (3/8 inch)

10

Tightening all the Fasteners

No Parts Required

Procedure

1. Tighten all nuts and bolts for the baffles; refer to the Installing the Baffles sections.
2. **For GrandStand mowers,** lower the machine, remove the plastic from the hydraulic tank, and connect the battery.
3. **For GrandStand mowers,** place the battery onto the machine.
4. Secure the battery with the hold-down plate, J-bolts, and locknuts.
5. Install the positive (red) battery cable to positive (+) battery terminal with a nut, washer, and bolt.

   Slide the rubber cover over the post.
6. Install the negative battery cable and ground wire to the negative (-) battery terminal with a nut, washer, and bolt.

   Slide the rubber cover over the post.

11

Installing the Recycler Blades

Parts needed for this procedure:

3	Recycler blade (sold separately)

Procedure

1. Install the 3 recycler blades; refer to the *Operator's Manual*.
2. Rotate the blades and ensure that there is clearance between the blades and baffles.

   If there is interference, loosen the baffle and reposition it.



Count on it.