THOR KITCHEN

GORDON RAMSAY COLLECTION

USE + CARE MANUAL

GAS RANGE

RSG30P | RSG30PB



REV.032026

USE AND CARE MANUAL

GAS RANGE

RSG30P/RSG30PB

THOR KITCHEN®

TABLE OF CONTENTS

SAFETY AND WARNINGS....5
WARNINGS....5
WELCOME....6
BEFORE YOU START....6
SAFETY SYMBOLS....7
ELECTRICAL SHOCK HAZARD....8
TIPPING HAZARD....8
EXPLOSION HAZARD....9
FIRE HAZARD....9
POISONING HAZARD....10
HOT SURFACE HAZARD....10
OTHER SAFETY TIPS....10
GAS SUPPLY REQUIREMENTS....13
SAFETY TIPS FOR GAS OPERATION....13
DIMENSIONS AND CLEARANCES....14
CONNECT RANGE TO GAS SUPPLY....20
AFTER INSTALLATION....21
COOKTOP SAFETY GUIDELINES....22
FIRST USE....22
CONDITIONING THE OVEN....23
SIMMER AND BROIL....24
FLAME SIZE....24
POWER FAILURE....24
COOKTOP....24
BURNER GRATES....24
OVEN BURNER USE....25

TABLE OF CONTENTS

BROIL BURNER USE 25
OVEN COOKING GUIDELINES 25
OVEN FUNCTION 27
NATURAL AIRFLOW BAKE 27
INFRARED BROIL 27
CONVECTION BAKE 27
CONVECTION ROAST 28
CONVECTION DEFROST 28
DEFROSTING 28
CONVECTION DEHYDRATION 28
BROILER OPERATION 29
PREHEATING 29
TO BROIL 29
SETTING BROIL 29
PREHEATING IS SUGGESTED 30
CLEANING INSTRUCTIONS 32
DO'S 32
DON'TS 32
CLEANING BURNER CAPS AND BRASS FLAME SPREADERS 32
CLEANING SIDE RACKS 33
CLEANING OVEN SHELVES 33
CLEANING BROIL/ROAST PAN AND SLOTTED GRID 33
CLEANING BAKE AND BROIL BURNERS 34
CLEANING PORCELAIN SURFACES 34
CLEANING THE OVEN GLASS WINDOW 34
CLEANING THE OVEN DOOR GASKET 34
CLEANING STAINLESS STEEL SURFACES 34
REMOVING AND REPLACING THE OVEN DOOR 35
REMOVING THE OVEN DOOR 35
REPLACING THE OVEN DOOR 36
TROUBLESHOOTING GUIDE 37
COOKTOP 37
OVEN 39
WARRANTY 41

1. Warnings

These are the most critical warnings summarized below.

⚠ WARNING

- If the instructions in this manual are not followed exactly, a fire or explosion may result, causing property damage, personal injury or death.
- Do not store or use gasoline or other flammable substances and liquids near this or other appliance,
- Never use this appliance as a space heater to warm a room.
- Installation of this appliance must be done by a qualified, service agency or gas supplier.

What to do if you smell gas

- Do not light any appliance
- Do not touch an electrical switch
- Immediately call the gas supplier from a neighbor's phone
- Open a window and leave the area
- Follow the gas supplier's instructions
- If you cannot reach the gas supplier, call the fire department

2. Welcome

Thank you for purchasing Thor range. We appreciate your business and we recommend that you read this entire User's Manual before operating your new appliance for the first time.

This manual contains instructions on how to properly install and set up your new range, as well as insights into the unique features that our product offers. Please keep this manual for future reference, as it contains answers to questions that you might have as you begin to cook.

Thank you, Thor Group

3. Before you start

- ✓ Make sure that the anti-tip of the range has been properly installed.
- ✓ Find the model and serial numbers on the CSA label in the bottom right-hand corner of the backboard. Note these numbers down for future reference in the space provided in section 'Warranty and service'.
- ✓ Read this guide, taking special note of the 'Safety and warnings' section.
- ✓ Remove all the packaging from the oven(s) and cooktop. Recycle items that you can. If any adhesive residue is left on surfaces, remove this using dish washing liquid on a soft cloth. Do not use any harsh or abrasive cleaners.
- ✓ Make sure you follow the instructions under 'First use' before using your range for cooking.
- ✓ To reduce the risk of fire, electrical shock, injury to persons, or damage when using the appliance, follow the important safety instructions listed below:

4. Safety and Warnings

Safety Symbols

Symbol	Definition
	This will alert you to potential personal or property safety hazards. Obey all safety rules to avoid any property damage, personal injury or death
	WARNING indicates a potentially hazardous situation, which, if not avoided, could result in serious injury or death
	CAUTION indicates a moderate hazardous situation, which, if not avoided, could result in minor or moderate injury
	CAUTION – when used without the safety alert symbol, indicates a potentially hazardous situation, which, if not avoided, could result in property damage
	IMPORTANT used for installation, operation and maintenance information that are not related to safety.

SAFETY AND WARNING

Electrical Shock Hazard



- ✓ Before removing a faulty oven light bulb, make sure you turn OFF the power to the range at the main fuse or circuit breaker panel. If you don't know how to do this, contact an electrician.
- ✓ Do not remove the kick panel or the back panel. Due to electrical wires behind it, both panels should only be removed by a qualified technician.
- ✓ This appliance is equipped with a three-prong grounding plug for your protection against shock hazard and should be plugged directly into a properly grounded power outlet. Do not under any circumstances cutor remove the grounding prong from this plug.

Failure to follow this advice may result in death or electrical shock.

Tipping Hazard



All ranges can tip and cause injuries to adults and children. To prevent tipping, install the anti-tip device supplied with your range. Follow all installation instructions.

- ✓ Even after the safety device is installed, do not step, lean or sit on the oven door or place any heavy objects on it. Doing so may result in personal injury.

Make sure anti-tip device is installed as follows:

1. Slide the range forward.
2. Install the anti-tip device as described in the instruction sheet
3. Safely tilt the front section of the range and slide the range slowly
4. back against thewall.
5. The rear pins should slide under the bracket.

Do not use the appliance until it has been secured.

Failure to follow this advice may result in serious injury.

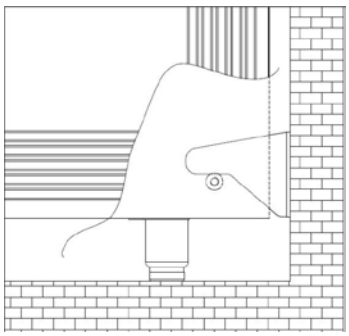

Anti-tip device for RSG36P/PB

Explosion Hazard



- ✓ If you smell gas, do not use the appliance. Open a window or door to let the gas escape, then follow the instructions on the inside front cover of this manual.
- ✓ Do not use water on grease fires. A violent steam explosion may result.
- ✓ Turn all burners off, then smother fire or flame with a dry chemical or foam-type extinguisher. Do not try to smother with flammable blankets.
- ✓ Do not heat unopened food containers such as cans. Build-up of pressure may cause container to burst and result in injury.

Failure to follow this advice may result in injury or death.

Fire Hazard



- ✓ Never use your appliance as a space heater. People could be injured or a fire could start.
- ✓ Keep the area around the appliance free from combustible materials (e.g. wall coverings, curtains, drapes), gasoline and other flammable vapors and liquids.
- ✓ Clean the stove and burners regularly.
- ✓ Do not let cooking grease or other flammable materials accumulate on the surfaces or near the appliance.
- ✓ Do not hang any articles (e.g. dish towels) off the oven handle. Some fabrics may ignite or melt from the heat.
- ✓ Never leave the cooktop burners unattended when in use. Boil over causes smoking and greasy spillovers that may ignite.
- ✓ Never spray an aerosol cleaner on or around the appliance while burners are lit, Be sure all the controls are turned off and the appliance is cool. The aerosol gas and chemicals in such cleaners could, in the presence of heat, ignite or cause metal parts to corrode.
- ✓ Do not store flammables near cooktop.
- ✓ Flammable materials should not be stored in an oven or near the cooktop. An accident could cause a serious fire.

SAFETY AND WARNING

Poisoning Hazard



- ✓ Never cover any slots, holes or passages in the oven bottom or cover an entire rack or the oven floor with materials such as aluminum foil. Doing so blocks airflow through the oven and may cause carbon monoxide poisoning. Aluminum foil linings may also trap heat, causing a fire hazard.
- ✓ Clean the appliance with caution. If a wet sponge or cloth is used to wipe spills on a hot cooking area, be careful to avoid steam burn. Some cleaners can produce noxious fumes if applied to a hot surface. Follow the directions of the cleaner manufacturer.
- ✓ Never use this appliance as a space heater to heat or warm the room. Doing so may result in carbon monoxide poisoning and overheating of the appliance.

Failure to follow this advice may result in poisoning or death.

Hot Surface Hazard



Accessible parts may become hot during use.

- ✓ Do not touch burners, areas near burners, the grill, griddle, grease drip- pans, heating elements or interior surfaces of oven. These may be hot enough to cause burns even though they are dark in color. During and after use, do not touch, or let clothing or other flammable materials contact these parts and surfaces until they have had sufficient time to cool. Other parts and surfaces of the appliance may become hot enough to cause burns - among these areas are the grates, back trim and oven vents at the back of the cooktop, front edge, surfaces adjacent to the cooktop, and the oven door.
- ✓ Use only dry potholders. Moist or damp potholders on hot surfaces may result in burns from steam. Do not let potholder touch hot heating elements. Do not use a towel or other bulky cloth.
- ✓ Let hot grease cool before attempting to handle it.

Failure to follow this advice could result in burns and scalds.

Other Safety Tips

- ✓ Read instructions before use
  Read all the instructions before using the appliance. Use the appliance only for its intended purpose as described in these instructions.
- ✓ Install the stove properly
  Be sure your stove is properly installed and grounded by a qualified technician.

SAFETY AND WARNING

- ✓ Do not install or operate stove if damaged.
  Do not operate the appliance if it is damaged or not working properly. If you received a damaged product, contact your dealer or installer immediately.

- ✓ Know how to turn off power in emergency
  Be sure to have the installer show you where and how to turn off the power supply to the range (i.e. location of the main fuse or circuit breaker panel) and where and how to turn off the gas supply to the range in an emergency.

- ✓ Do not leave children alone near stove
  Children should not be left alone or unattended in the area where the appliance is in use. They should never be allowed to play with the appliance or to sit or stand on any part of the appliance.
- ✓ Do not store toys or candy over the stove
  For safety reasons, do not store items of interest to children in cabinets above a range or at the back of the range – children climbing on the range to reach items could be seriously injured.

- ✓ Don't wear lose clothing that could catch fire
  Loose-fitting or hanging garments should never be worn while using the appliance.

- ✓ Do not repair or replace parts yourself (unless recommended)
  Do not repair or replace any part of the appliance
  unless specifically recommended in the manual. All other servicing should be referred to a qualified technician. Technicians must disconnect the appliance from the power supply before any servicing.
- ✓ Careful opening oven door
  Use care when opening the oven door by allowing warm air or steam escape before removing or replacing food.

- ✓ Keep oven vent ducts unobstructed.

- ✓ Do not touch hot oven shelves
  Protect your hands from burning by making sure the oven is cool before sliding oven shelves into oven. If a shelf must be removed while the oven is hot, do not let oven mitts or potholder contact the base of the oven or hot heating elements in the oven.
- ✓ Protect oven gasket
  Do not clean the oven gasket or use any oven-cleaning products on it. It is essential for a good seal,
  which ensures that the oven operates efficiently. Care should be taken not to rub, damage or move it.
- ✓ Protect glass oven doors
  Do not use harsh/abrasive cleaners, scourers or sharp metal scrapers to clean the oven door glass since they scratch the surface, which may result in the glass shattering.

- ✓ Never step on oven door or place a heavy object (like a Turkey) on it

- ✓ Check for gas leaks
  When the appliance installed, check for gas leaks according to the instruction before use.

- ✓ Ventilation hood is mandatory
  This appliance should not be operated without a properly sized and operational ventilation hood.
- ✓ Use proper gas conversion kit
  This stove might be used for natural gas or liquid propane. If you are not sure whether the unit is used for NG or LP, please contact your dealer or Thor customer service for verification. For LP conversion, please use conversion kit for your certain model. Please have a certified technician install the unit and kit (technical support is available during normal business hours). If planning to resell unit, please indicate whether it is natural gas or has LP kit installed.

- ✓ Do not reach for items over the stove when it is lit Be careful when reaching for items stored in cabinets above theappliance.

- ✓ Read all instructions before using the product to ensure proper and safe operation. Install or locate the product only in accordance with the provided Installation Instructions.

- ✓ Do not attempt to adjust, repair, service orreplace any part of your appliance unless it is specifically recommended in this guide.

- ✓ Do not use the range as a spaceheater.

- ✓ Do not leave children unattended in the area where the range is in use. Never allow children to sit or stand on any part of the range. Do not let children play with the range.

- ✓ All servicing should be referred to aqualified technician.

- ✓ Have the technician show you the location of the gas shut off valve and how to shut it off in anemergency.

SAFETY AND WARNING

- ✓ Always disconnect power to appliance before any type of servicing.
- ✓ Do not use abrasive or caustic cleaners or detergents on this appliance. They may cause permanent damage to the surface.
- ✓ When cooking, set the burner controls so that the flame heats only the bottom of the utensil and does not overlap at the sides of the utensil.
- ✓ Utensils (pots and pans) that conduct heat slowly, i.e. glass pots, should be used in conjunction with burner flames at a low or medium setting.
- ✓ Turn off all controls and wait for appliance parts to cool down before touching them. Do not touch the burner grates or surrounding areas until cool.
- ✓ Do not use water on grease fires.
- ✓ Clean appliance with caution.
- ✓ Always turn pot handles to the side or back of the range. Do not turn handles towards the area where they are easily burned. Handles should not extend over the adjacent burners.
- ✓ Use the range only for cooking tasks as outlined in this manual. When using the range, do not touch the grates, burner caps, burner bases, or any other parts in proximity to the flame. These components may be hot enough to cause burns.
- ✓ Use dry pot holders. Moist or damp pot holders on hot surfaces may result in burns from steam
- ✓ Do not use a towel or other bulky cloth.
- ✓ Do not heat unopened food containers. Buildup of pressure may cause the container to explode and result in injury.
- ✓ During and after use, do not touch interior surfaces of the oven until cool
- ✓ Do not let pot holder touch hot surface areas

5. Gas Supply Requirements

Installation of this range must conform with local codes, or in the absence of local codes, with national Fuel Gas Code，ANSIZ223.1 / NFPA 54.

In Canada, installation must conform to the current natural Gas Installation /code, CAN 1-1.1-M81 and with local codes where applicable.

This range has been design-certified according to ANSIZ21.1a, latest edition.

Reading	LP in. w.c.	NG (Natural Gas) in. w.c,
Maximum gas pressure	13.0.	10.0
Appliance Regulator Setting for outlet pressure	10.0	5.0

Safety Tips for Gas Operation

- ✓ Keep appliance area clear and free from combustible materials, gasoline, and otherflammable vapors.
- ✓ Do not obstruct the flow of combustion air into the range and ventilation air away from the range.
- ✓ Ventilation: it is a must that the unit be set under a powered, vented exhaust hood of sufficient size and capacity.
- ✓ Before installing the range, you must locate and secure the included anti-tip bracket to thewall for your range.

⚠ CAUTION

- ✓ The use of cabinets for storage above the appliance may result in a potential burn hazard. Combustible items may ignite; metallic items may become hot and cause burns. If a cabinet storage is to be provided, the risk can be reduced by installing a range hood that projects horizontally a minimum of 5" (12.7cm) beyond the bottom of thecabinets.

DIMENSION AND CLEARANCE

⚠ WARNING

- ✓ The appliance shall not be used for space heating. This information is based onsafety considerations.
- ✓ All openings in the wall behind the appliance and in the floor under the appliance shallbe sealed.

6. Dimensions and Clearances

- ✓ The range may be installed flush to the rear wall.
- ✓ You may install a non-combustible material, such as tile, on the rear wall above the range and up the vent hood.
- ✓ It is not necessary to install non-combustible materials behind the range below the countertop height.
- ✓ The minimum distance from the side of the range above the counter top to combustible sidewalls must be at least 10 inches.

DIMENSION AND CLEARANCE

BTU Design

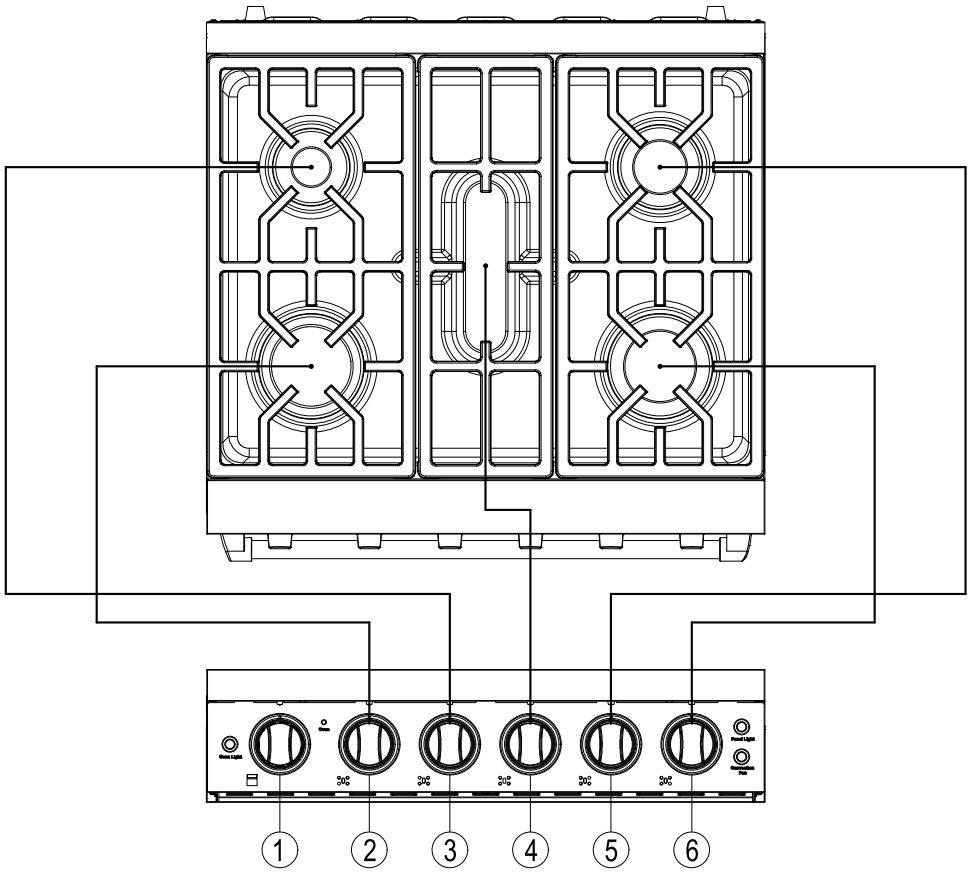

①: 18500BTU
②: 18000BTU
③: 4000BTU
④: 9000BTU
⑤: 8000BTU
⑥: 6000BTU

DIMENSION AND CLEARANCE

RSG30P RSG30PB

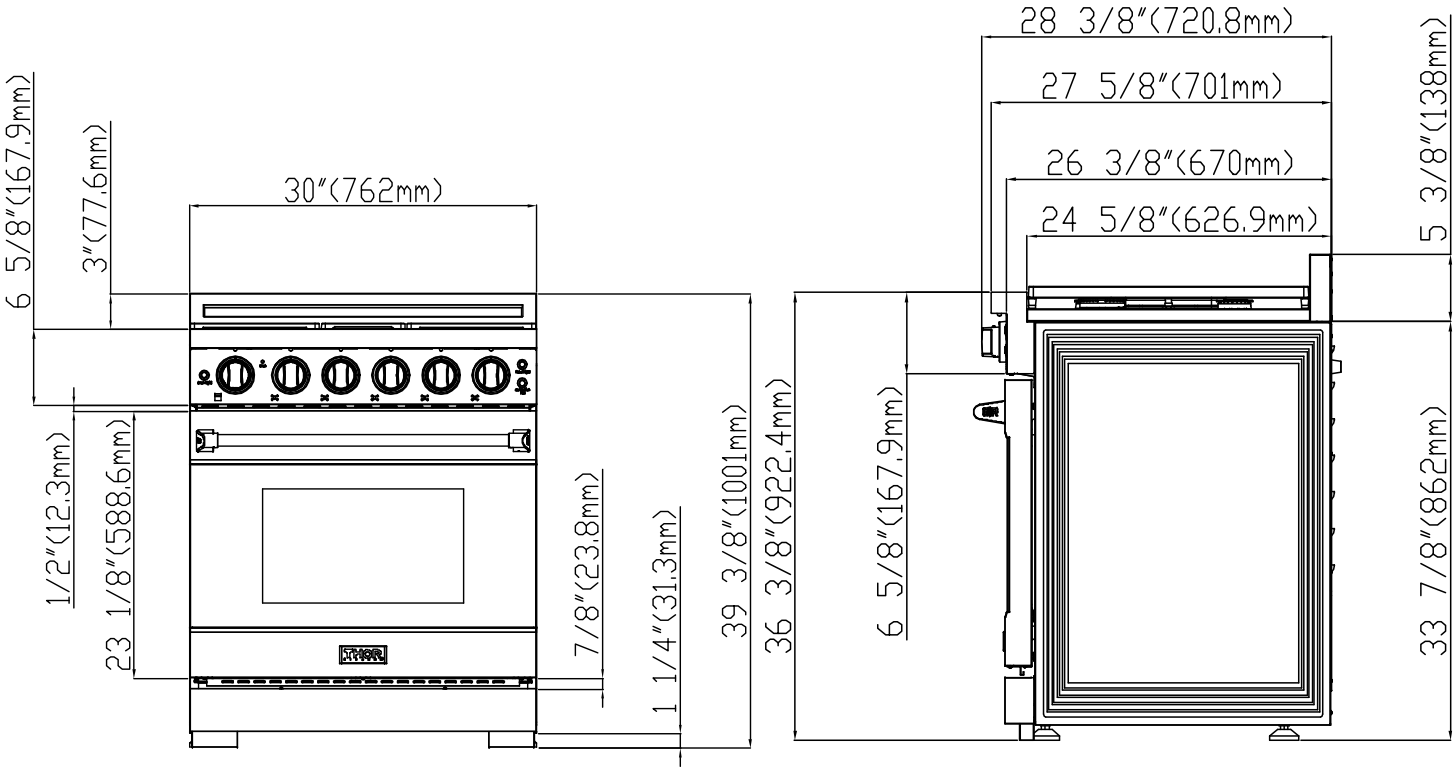

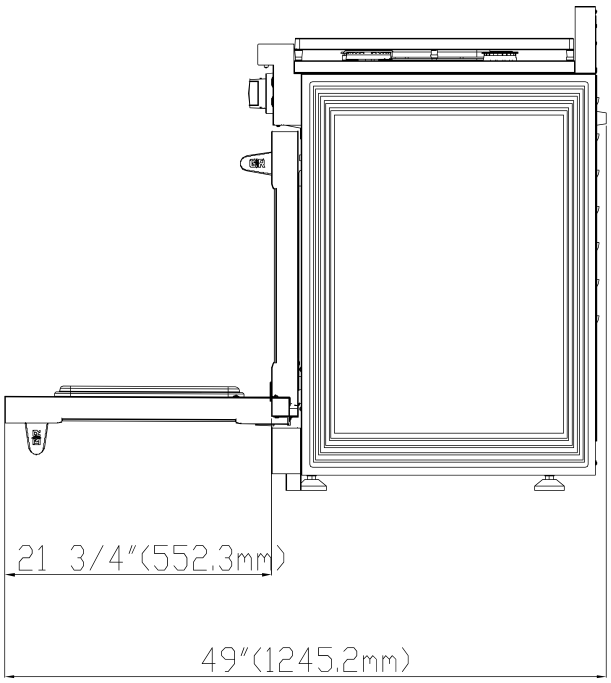

DIMENSION AND CLEARANCE

RSG30P RSG30PB Clearance

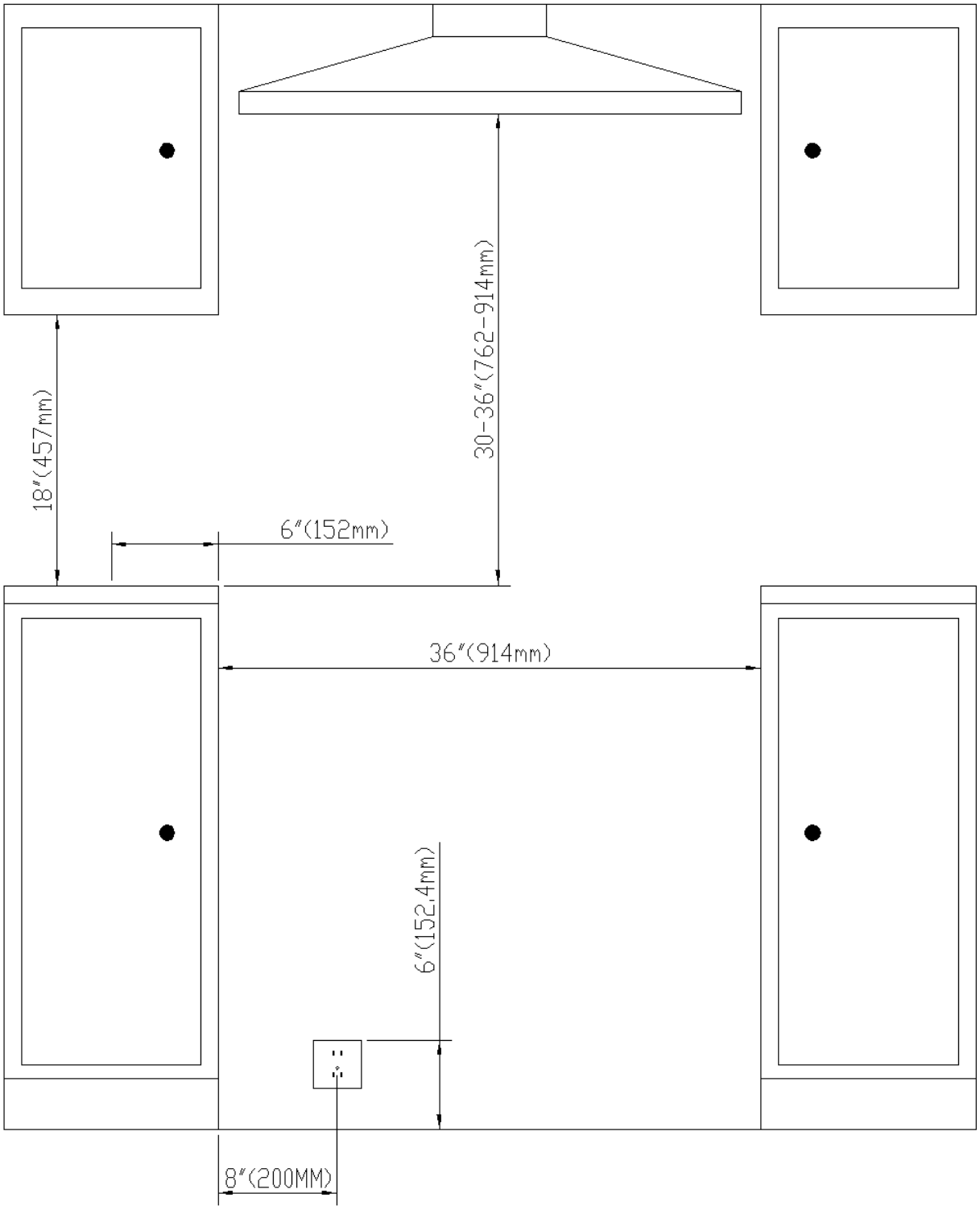

Front View

DIMENSION AND CLEARANCE

RSG30P RSG30PB Clearance

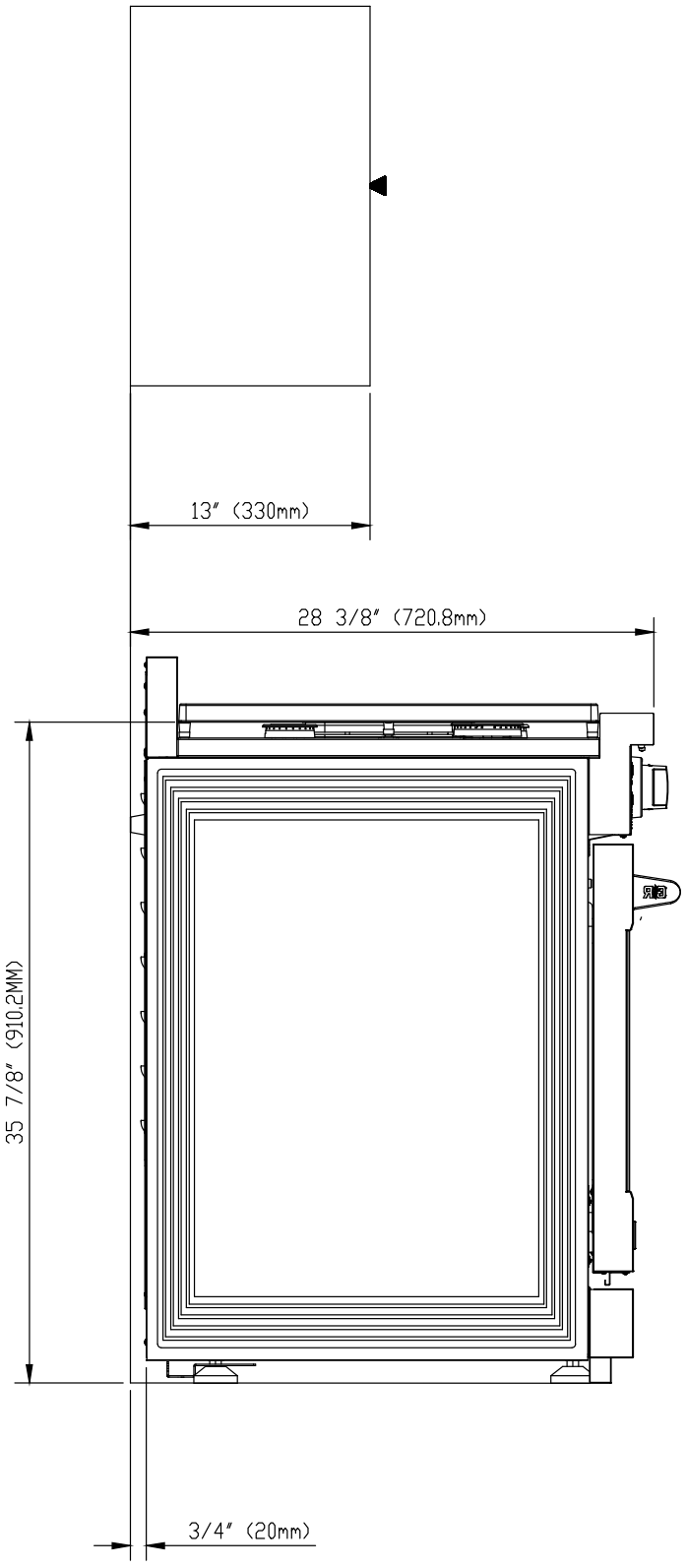

Side View

7.Electric Power Supply Requirements

Your range must be electrically grounded in accordance with local codes or, in the absence of local codes, in accordance with the National Electrical Code (ANSI/NFPA 70, latest edition).

In Canada, electrical grounding must be in accordance with the current CSA C22.1 Canadian Electrical Code Part 1 and/or local codes. A copy of this standard may be obtained from: National Fire Protection Association, 1 Battery march Park, Quincy, Massachusetts 02269-9101.
The power supply must be the correct polarity. Reverse polarity will result in continuous sparking of the electrodes, even after flame ignition. If there is any doubt as to whether the power supply has the correct polarity or grounded, have it checked by a qualified electrician.

Use 120V, 60Hz, and properly grounded branch circuit protected by a 15-amp or 20-amp circuit

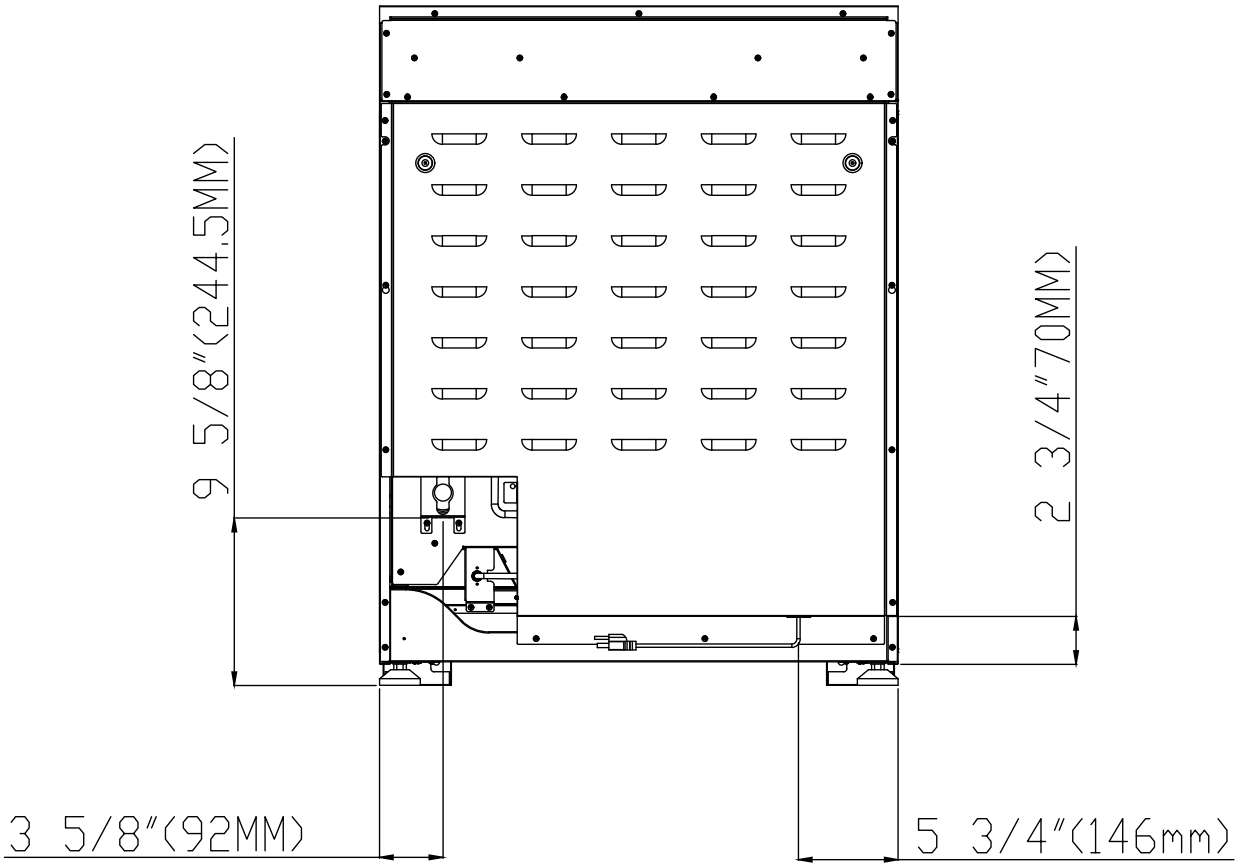

Installation for RSG30P&RSG30PB

CONNECT RANGE TO GAS SUPPLY

8. Electrical Grounding Instructions

⚠ WARNING

This indoor gas cooking appliance is equipped with a three-prong (grounding) plug for your protection against shock hazard and should be plugged directly into a properly grounded three- pronged receptacle.

Where a standard two-prong wall receptacle is encountered, it is the responsibility and obligationof the customer to have it replaced with a properly grounded three-prong wall receptacle.

Do not cut or remove the grounding prong from the power cord.

Before connecting plug to the cord, disconnect the electrical supply.

CAUTION

Label all wires prior to disconnection when servicing controls. Wiring errors can cause improper and dangerous operation. Verify proper operation after servicing.

9. Connect Range to Gas Supply

Most localities will require that the stove shutoff valve and gas connections be installed by a certified technician or plumber. These instructions are for a professional. Gas installation specifications and regulations may vary so please consult your local codes before proceeding.

1. Install a manual gas line shut-off valve in the gas line as follows:

    a. in an easily accessed location outside the range

    b. in the gas piping external to the appliance

2. Install male 1/2" flare union adapter to 1/2" NPT internal thread elbow at inlet of regulator.

On models equipped with standard twin burners, install the male pipe thread end of the 1/2" flare union adapter to the 1/2" NPT internal thread at inlet of pressure regulator.

Use a wrench on the regulator fitting to avoid damage.

CONNECT RANGE TO GAS SUPPLY

1. Install male 1/2" or 3/4" (3/4" refers to 48-inch gas range) flare union adapter to the NPT internal thread of the manual shut-off valve, taking care to secure the shut-off valve to keep it from turning.
2. The gas supply pressure for checking the regulator setting is 6 in.w.c. (Nature Gas) and 11 inch.w.c. (LP gas) connect flexible gas line connector to the regulator on the range. Position range to permit connection at the shut-off valve.
3. When all connections have been made, make sure all range controls are in the position and turn on main gas supply valve.
4. Leak testing of the appliance shall be conducted according to the manufacturer's instructions. Use some soap water (50% water and 50% soap) or a leak detector at all joints and connections to check for leaks in the system. Do not use a flame to check for gas leaks.
5. The appliance must be isolated from the building's gas supply piping system by closing its individual manual shut-off valve during any pressure testing of the gas supply piping system at test pressure equal to or less than 1/2 psig(3.5kPa).

After installation:

1. Check ignition of cooktop burners.
2. Check ignition of oven burner.
3. Visually check tubular burner (oven burner) re-ignition to be sure both rows of burner ports are relighting each time.
4. Check for gas leaks at all gas connections (using a gas detector, never aflame).
5. Check oven bake and convection bake function.

COOKTOP SAFETY GUIDELINES

10. First Use

Conditioning the oven

Conditioning will burn off any manufacturing residues and ensure that you get the best results right from the start.

Follow these steps to condition your new stove’s oven:

1.Insert all the shelves. See ‘Positioning the shelves’ for instructions.

2.Turn on the ventilation hood above your range on high.

Heat the empty oven at the highest temperature for:

a.30 minutes using BAKE

b.30 minutes using BROIL (some ovens only).

There will be a distinctive smell while you are conditioning the oven. This is normal, but make sure the kitchen is well ventilated during the conditioning.

Once cooled, wipe out the oven with a damp cloth and mild detergent, and dry thoroughly.

6.Positioning the shelves

Both the sides panel and shelves with safety stop to keep them sliding out of the oven when pulled forward;

And the front stop prevents the shelves from against hitting the back of the oven

11. Cooktop Safety Guidelines

There are dual burners have the same low turn-down setting (SIM) for gentle simmering (620 BTU/hr.). Use the SIM setting for melting chocolate and butter, cooking rice and delicate sauces, simmering soups and stews, and keeping cooked food hot.

- ✓ Never leave the cooktop unattended when in use. Boil over causes smoking and greasy spills that may ignite.
- ✓ Never allow flames to extend beyond cookware or curl up on sides. This could discolor and damage the utensil and you may get burned touching the hot handle.

COOKTOP SAFETY GUIDELINES

- ✓ Keep handles out of the way. Turn handles so that they don't extend over the edge of the range or on a burner that is on.
- ✓ Take care when deep-frying. Oil or fat can overheat very quickly, particularly on a high setting.
- ✓ Make sure that all burner parts are properly in place. Incorrectly or incompletely assembled burners may produce dangerous flames. See 'Replacing the burner parts' in 'Care and cleaning'.
- ✓ Keep the burners clean, especially after a spill or boil over, make sure you clean the affected burners before using them again. Food residue may clog the igniter and the notches of the flame spreader, stopping the burner from functioning correctly. See 'Care and cleaning' for instructions.
- ✓ Check that the burner flames. They should be blue with no yellow tipping, and burn without fluttering all around the burner cap. If not, see 'Troubleshooting' for advice.



Conditioning the oven

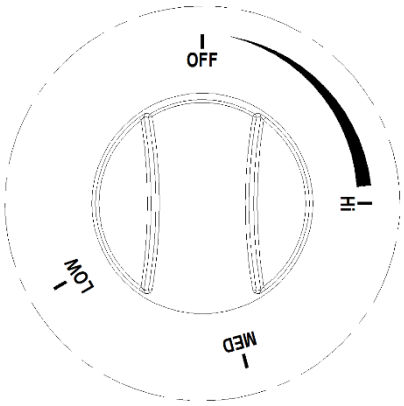

To light the top burners, push and turn the appropriate control knob counter clockwise to the "HI" position. You will hear a clicking noise – the sound of the electric spark igniting the burner. Once burner ignition has been achieved, then turn the burner control knob to adjust the desired heat setting.

COOKTOP SAFETY GUIDELINES

NOTE: When one burner is turned to the "HI" position, the burner igniters will park. Do not attempt to disassemble or clean around any burner while another burner is on. Do not touch any burner cap, burner base, or igniter while the igniters are sparking.

Simmer and Boil

A smaller flame will give the best simmer results. Small flames offer precise cooking performance for delicate foods, keeping food warm, melting chocolate or butter, and for cooking that need to cook over low heat for a long time.

2The highest flame settings provides the maximum heat that is available on your range. This setting should be used for heavy cooking loads such as water boiling or pasta cooking.

Flame Size

When you select the flame size, watch the flame when you turn the knob.

Any flame larger than the bottom of the cookware is wasted.The flame should be steady and blue in color. Foreign material in the gas line may cause an orange flame during initial operation.

Power Failure

If the gas does not ignite within four seconds, turn off the valve and allow at least five minutes for any gas to dissipate. Repeat the lighting procedure.

If the power fails, it is not capable of being safely placed in operation and user that no attempt should be made to operate during power failure.

Cooktop

To prevent the cooktop from discoloring or staining, clean cooktop after each use, and wipe up acidic or sugary spills as soon as the cooktop has cooled.

The sealed burners of your range are not sealed to your cooktop and are designed to be removed. Boil overs or spills will not seep underneath the cooktop. The burners should be cleaned after each use.

Burner Grates

The grates must be properly positioned before cooking. Improper installation of the grates may result in scratching of the cooktop and / or poor combustion.

Oven burner use

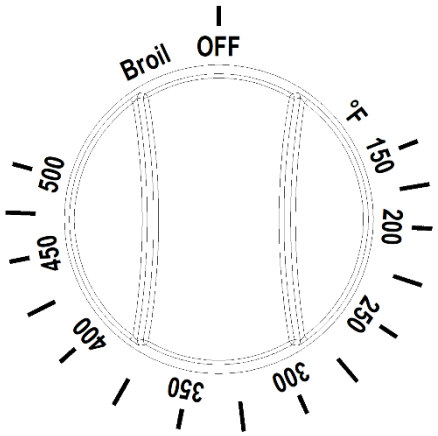

To light the oven burner, push and turn the appropriate control knob counter clockwise to the (150 °F~500°F) position. You will hear a clicking noise – the sound of the electric spark igniting the burner. Once burner ignition has been achieved, then turn the burner control knob to adjust the desired heat setting.

Broil burner use

To light the broiler burner, push and turn the appropriate control knob clockwise to the broil position. You will hear a clicking noise – the sound of the electric spark igniting the burner. Keep pressing about 4 seconds until the burner ignition has been achieved.

IMPORTANT

Oven cooking guidelines

- ✓ Do not block the ducts on the rear of the range when cooking in the oven. It is important that the flow of warm air from the oven and fresh air into the oven burner never be interrupted. Avoid touching the vent opening or nearby surfaces during oven or broiler operation because they are hot.
- ✓ Use all the oven modes with the oven door closed.
- ✓ Never use aluminum foil to cover the oven shelves or to line the floor of the oven. The trapped heat can irreversibly damage the enamel and may even cause fire.

COOKTOP SAFETY GUIDELINES

- ✓ Do not place water, ice, or any dish or tray directly on the oven floor, as this will irreversibly damage the enamel.
- ✓ Do not cover the slotted grid of the broil/roast pan with aluminum foil. This will catch the grease and could cause fire.
- ✓ Do not use plastic wrap or wax paper in the oven.
- ✓ For food safety reasons, do not leave food in the oven for longer than two hours before and after cooking or defrosting. This is to avoid contamination by organisms which may cause food poisoning. Take care during warmer weather.

⚠ WARNING

According to the United Sates Department of Agriculture: DO NOT hold foods at temperatures between 40ºF to 140ºF more than 2 hours. Cooking raw foods below 275ºF is not recommended.

⚠ WARNING

Never cover any slots, holes or passages in the oven bottom or cover an entire rack with materials such as aluminum foil. Doing so blocks air flow through the oven and may cause carbon monoxide poisoning.

Aluminum foil lining may also trap heat, causing a fire hazard.

12. Oven Function

Natural Airflow Bake

Occurs when heat is transferred into the oven from the bake burners in the bottom of the oven cavity. Heat is then circulated by natural airflow. This is a traditional bake setting.

Infrared Broil

The broil burner is located at the top of the oven. This burner heats the metal screen until it glows. The glowing screen produces the infrared heat, searing the outside of broiled foods and sealing in juices.

Convection Bake

The oven convection fan circulates and distributes the heat in the oven for faster and even cooking. Convection cooking allows you to bake more items on multiple racks.

To bake using the convection fan:

1.Position the oven bottom cover and the oven shelves before using

oven. 2.Remove any unused shelves and baking utensils from the oven.

3.Preheat the oven to the temperature stated in the recipe. Depending on the temperature andthe size of the oven, preheating will take around 15-20minutes.

4.Arrange pans and food items evenly on the shelves. Make sure pans do not touch each other or the sides of the oven. When baking a single item, always center the item on the oven shelf. If baking on multiple shelves, make sure you stagger items on the shelves so that one is never directly above another.

5.When baking using convection, either reduce the temperature stated in the recipe and leave the baking time unchanged, or reduce the baking time by several minutes and leave the temperature unchanged. For foods with a baking time of over an hour, reducing both the temperature and time slightly may give the best results.

6.Dark metal baking pans or those with a dull finish absorb heat faster than shiny pans, andare excellent for pies and breads, or anything that needs browning or a crispercrust.

7.A shiny finish may work best for foods that require lighter, delicate browning (e.g. cakes and cookies), as it reflects some heat and gives a less intense bakingsurface.

8. Avoid opening the oven door frequently during baking.

OVEN FUNCTION

Convection Roast

For best results use the broiler pan. The pan is used to catch grease spills and has a cover to prevent grease splatter.

The convection fan circulates heated air over the around the food being roasted, sealing juices quickly for a moist and tender product while, at the same time, creating a rich golden-brown exterior.

Use the broil/roast pan and slotted grid supplied with the range when roasting in order to elevate the meat on a metal roasting rack. This allows hot air to circulate around the meat, browning it more evenly like a rotisserie. A suitable roasting rack can be purchased through your HRG by the distributer or Customer Care.

When roasting larger items like a whole turkey, use only the pan and grid for greater stability.

Convection Defrost

With temperature control off, a motorized fan in the rear of the oven circulates air. The fan accelerates natural defrosting of the food without heat. To avoid illness and food waste, do not allow defrost food to remain in the oven for more than two hours without being cooked.

Defrosting

To thaw uncooked frozen food, set the oven temperature to 100-150°F . Once thawed, cook the food immediately and do not refreeze.

To prevent liquid from thawing food dripping on the oven floor, be sure any uncooked food is tightly wrapped in foil and/or placed in a container.

Convection Dehydration

With the temperature control on 175 °F, warm air is radiated from the bake burners on the bottom of the oven cavity and is circulated by a motorized fan in the rear of the oven.

Over a period of time, the water is removed from the food by evaporation. Removal of water increases growth of microorganisms and detains the activity of enzymes.

13. Broiler Operation

Note: Door must be closed during broiler operation.

Broiling is a method of cooking tender cuts of meat directly under the infrared broiler in the oven. Broiling in the oven is accomplished with the oven door closed. It is normal and necessary for some smoke to be present to give the food a broiled flavor.

If you open the oven door to check the food, have it open for as short a time as possible. This is to prevent the control panel from overheating and prevents melted knobs.

Use both the broil/roast pan and slotted grid supplied. The grid helps to reduce smoking and splatter by letting grease drip into the bottom of the pan, away from intense heat. To prevent food sticking, spray the grid with a light coating of non-stick cooking spray.

Preheating

Preheating is suggested when searing rare steaks (Remove the broiler pan before preheating with the infrared broiler. Foods will stick to hard metal). To preheat, turn the "Oven" selector knob to the "Broil" position. Wait for the burner to become hot, approximately 2 minutes. Preheating is not necessary when broiling meat well-done.

To Broil

Broil one side until the food is browned; turn and cook on the second side. Season and serve. Always pull the rack out to the "stop" position before turning or removing food.

Setting Broil

The "Oven" selector knob controls the Broil feature. When broiling, heat radiates downward from the oven broiler for even coverage. The Broil feature temperature is 500 F (260℃).

The broil pan and insert used together allow dripping grease to drain and be kept away from the high heat of the oven broiler. DO NOT use the broil pan without the insert.

DO NOT cover the broil pan insert with foil. The exposed grease could catch fire.

BROILER OPERATION

To set the oven to Broil:

1.Place the broiler pan insert on the broiler pan. Then place the food on the broiler pan insert.

2.Arrange the interior oven rack and place the broiler pan on the rack. Be sure to center the broiler pan and position directly under the broil burner. If preheating the broil burner first, position the broiler pan after the broil burner is preheated.

3. Turn selector knob to Broil.

The oven indicator light will remain on until the selector knob is turned to the off position or the temperature control cycles off.

Preheating is suggested

Choose a suitable shelf position. To ensure that meat is cooked through rather than just browned on the outside, broil thick pieces of meat and poultry on shelf positions 2 or 3. Use shelf position 4 for thinner items that need less cooking time like steaks, chops, or hamburger patties.

When finishing off meals by browning the top under the broiler, use metal or glass-ceramic bakeware. Do not use heatproof glass or earthenware, as these cannot withstand the intense heat of the broiler.

Center the item in the oven, so that it is directly under the broiler.

BROILER OPERATION

For the models with Griddle

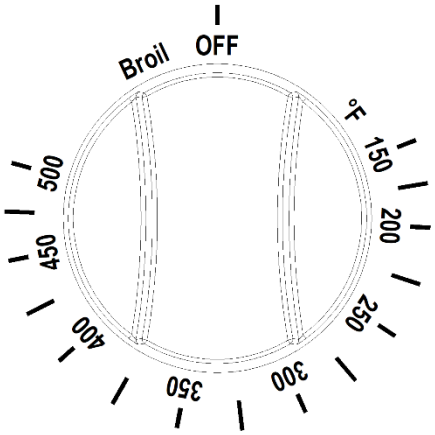

Before Using the Griddle

1. Clean the griddle thoroughly with warm, soapy water to remove dust or any protective coating.
2. Rinse with clean water and wipe off to dry with soft, clean, lint-free cloth.
3. A stainless-steel cover when the griddle is not being used is provided. Please note that the cover must be removed before turning the griddle on.
4. Make sure the grease tray is under the front edge of the griddle. Position the tray under the griddle overhang to catch grease or food residue.

Use of the griddle

1. Push and turn the control knob counter-clockwise to the preferred cooking temperature.
2. Preheat the griddle for 10-12 minutes.
3. When the griddle is preheated to the desired temperature, the indicator light will turn on.
4. Butter or cooking oil can may be added.

⚠ CAUTION

- ✓ The surface of the griddle is hot after use. Please allow sufficient time for the griddle to cool prior to cleaning.
- ✓ When using the appliance for the first time. The oven and broiler burners should be turned on to burn off the manufacturing oils. Turn the oven on to 450℉(230℃) for 20 to 30 minutes. Then turn the oven control knob to "Broil" for the same length of time. It is recommended to turn on the ventilator above the range at this time.
- ✓ Must disconnect the electrical supply before servicing or cleaning the appliance. Failure to follow this advice may result in injury or death.

CLEANING INSTURCTION

14. Cleaning Instructions

Do's

- ✓ Read these cleaning instructions and the 'Safety and warnings' section before youstart cleaning your range.
- ✓ Before cleaning or removing any part, make sure that everything on the range has beenturned off.
- ✓ Unless suggested otherwise in the following chart, allow any part to cool to a safe temperature before cleaning. If you do need to handle a warm or hot part (e.g. grill or griddle), take extreme care. Wear long protective mitts to avoid burns from steam or hot surfaces.
- ✓ Try using any cleaner on a small area first, to ensure it does notstain.
- ✓ See the pages following this chart for instructions on removing and replacing various parts of the range for cleaning or maintenance.
- ✓ To help you identify any parts, see illustrations in section 'Introduction' and after thiscleaning chart.

Don'ts

- ✓ Do not use aerosol cleaners until the range has completely cooled. The propellant substance in these cleaners could catch fire in the presence of heat.
- ✓ Do not let soiling or grease accumulate anywhere in or on the range. This will makefuture cleaning more difficult and may present a fire hazard.
- ✓ Do not use any abrasive or harsh cleaners, cloths, scouring pads or steel wool. Thesewill scratch your range and damage its appearance.
- ✓ Do not use a steam cleaner to clean any part of the range.
- ✓ Do not lift the black grill and griddle frames off thecooktop.

Cleaning Burner caps and brass flame spreaders

1.Check that the burner is turned OFF and allow it to cool. Lift off the burner cap and brass flame spreader. Wash them in hot soapy water, rinse, and dry.

2.Use a stiff nylon brush or straight-ended paper clip to clear the notches of a flame spreader. Replace the flame spreader and burner cap correctly.

CLEANING INSTURCTION

3.Before cleaning the cooktop, ensure that all burners are turned off and that all components are cool enough to safely touch

4.To avoid electrical shock or burns, turn off controls and ensure the cooktop is cool before cleaning.

5.Do not use harsh or abrasive cleaning detergents, waxes, polishes, or commercial cooktop cleaners to clean the cooktop.

6.Use only a sponge, soft cloth, fibrous or plastic brush, and nylon pad for cleaning.

7.Always dry components completely before using the cooktop.

8.Control Panel, Door Handle, Control Housing

Clean the control panel, door handle and control housing with a solution of mild detergent and warm water.

9.Do not use abrasive cleaners or scrubbers; they may permanently damage the finish.

10. Dry the components with a soft, lint-free cloth.

Cleaning side racks

1.Pre-soak any stubborn, burnt-on soiling, then clean with a solution of mild detergent and hot water and wipe dry with a microfiber cloth.

2.Alternatively, clean these in the dishwasher.

Cleaning oven shelves

3. To remove stubborn or 'baked-on' soiling, scrub with a dampened, soap-filled, non-

4. metal, non-abrasive pad, then wipe dry.

5. Apply a chrome cleaner with a damp sponge or cloth following manufacturer's instructions.

6. Wipe and dry.

Cleaning broil/roast pan and slotted grid

- ✓ Pre-soak any stubborn soiling in a solution of mild detergent and hot water.
- ✓ Wash by hand or in a dishwasher.

CLEANING INSTURCTION

Cleaning bake and broil burners

✓ Do not clean these parts. They self-clean during normal use.

Cleaning porcelain surfaces

Clean oven interior and inner door liners with a solution of mild detergents and hot water. Rinse and dry with a soft, lint-free cloth. Do not use abrasives or commercial oven cleaners.

Cleaning the oven glass window

✓ Clean all glass surfaces with a solution of mild detergent and hot water. Use a mild glass cleaner to remove fingerprint or smears.

✓ Dry completely with a soft, lint-free cloth.

Cleaning the oven door gasket

Avoid cleaning this part. If you need to remove large food particles off it, proceed as follows:

1.Dampen a sponge with clean hot water.

2.Gently wipe off the soiling, but do not rub. 3.Press

a dry towel gently on the gasket to dry.

Do not use any cleaning detergents on the gasket. The gasket is essential for a good seal.

CAUTION: Do not scratch, displace, or damage it.

Cleaning stainless steel surfaces

✓ Do not use any cleaning product with chlorine bleach.

✓ Do not use a steel wool pad; it will scratch the surface.

✓ Use a hot, damp cloth with a mild detergent.

✓ Use a clean, hot, damp cloth to remove soap. Dry with a dry, clean cloth.

15.Removing and Replacing the Oven Door

Do not lift the oven door by its handle. Doing so may damage the door.
Make sure the oven and the door are cool before you begin to remove the door.

IMPORTANT

Before removing the door, ensure there is a large, clean, and protected surface in the kitchen to rest the door on.

Caution: The oven door is heavy.

Removing the oven door

1. Open the door very carefully

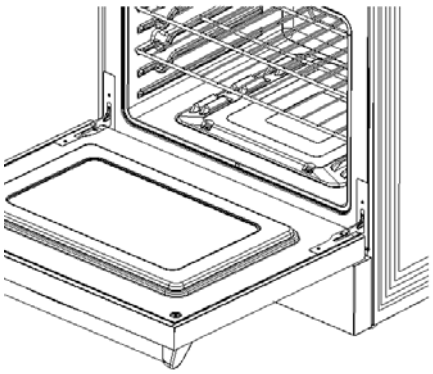

2. Open the levers fully on both sides.

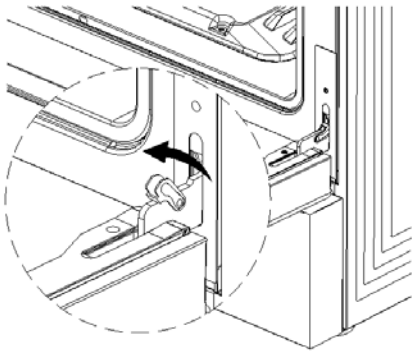

3. Hold the door firmly on both sides.

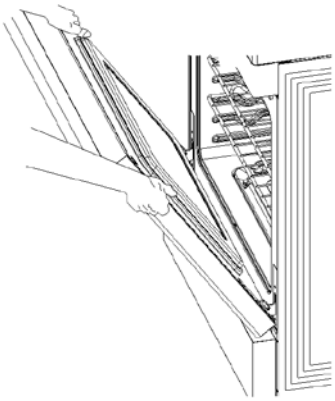

4. Disengage the hinges and remove the door; gently close it about halfway; place the door on a protected surface.

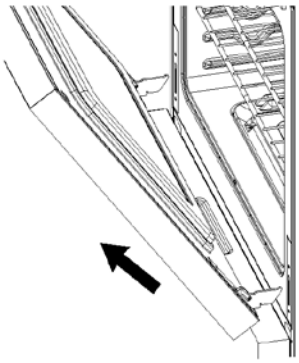

REMOVING AND REPLACING THE OVEN DOOR

Replacing the Oven Door

1. Hold the door firmly in an approximately open position.

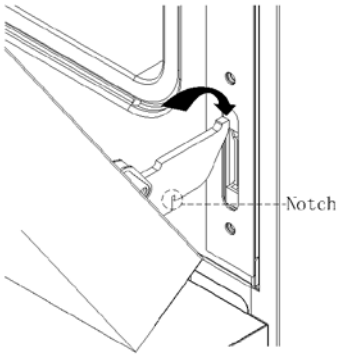

2. Insert the hinge tongues into the slots making sure that the notches on bothsides drop into place as shown.

3. Open the door fully.

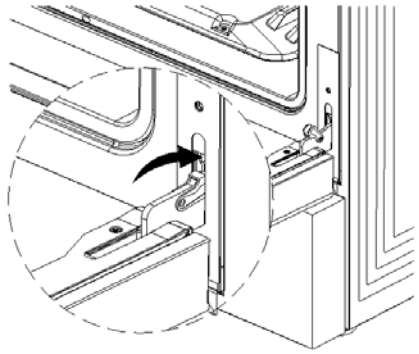

4. Fully close the levers on the left and right hinges,then close the door.

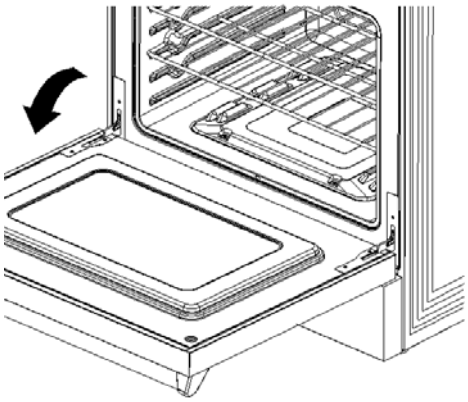

16. Troubleshooting Guide

If you can't find an answer to your problem in the chart below, or if the problem cannot be fixed, you will need technical help. Contact your Authorized Service Center or Customer Care.

Problem	Probable causes	What to do
Cooktop		
Some burners will not light. Flames do not burn all around the burner cap.	Burner parts or igniters may be wet, dirty, or misaligned.	Check that the burner parts are clean, dry, and correctly assembled. Check that the igniters are clean and dry. See 'Care and cleaning' for instructions.
Burner flames very large and yellow.	Burner bezel ports are clogged. Burner ports or burner caps are not positioned properly. Cooktop is being operated with the wrong type of gas. Regulator is not installed, is faulty, or is set for the wrong type of gas.	Clean burner bezel ring ports with straightened paper clip, needle, or wire. Remove and carefully re- install burner bezel and caps. Ensure that the type of cooktop matches the natural gas supply. Check installation, replace regulator, or set regulator for proper gas.
Sparking but no flame ignition.	Gas shut-off valve is in the 'OFF' position.	Turn shut-off valve to the 'ON' position.
Igniters spark continuously after flame ignition.	Power supply polarity is reversed. Igniters are wet or dirty.	Have polarity corrected. Dry or clean igniters.
Burner flame goes out at low setting.	Low gas supply pressure. Air intake holes around knobs are obstructed.	Contact gas company. Remove obstruction.

TROUBLESHOOTING GUIDE

The flames have suddenly gone out.	A draft or a spill has extinguished the flame.	No action required. The burner will detect this and automatically relight. However, if there has been a large spill, we recommend turning the burners off and cleaning the burners and sump area. See 'Care and cleaning' for instructions.
There is a power failure – can I still use the cooktop burners?	Power outage in your area.	The cooktop burners can still be used. To light them: 1.Holding a lighted match to the flame spreader, push in on the control knob and turn counterclockwise to LITE. 2.When the flame is burning all the way around the burner, you may adjust the heat. Important! If the flame is blown out during a power failure, turn the knob immediately to OFF, as the burner will not automatically relight and gas may escape.

TROUBLESHOOTING GUIDE

Problem	Possible causes	What to do
Oven		
The oven doesn't work (no heating).	No power supply (oven light and halos do not come on either). No gas supply (gas ovens).	Check that the circuit breaker hasn't tripped and there is no power outage in your area. If there is a power outage, you cannot use the oven until power has been restored. The supply to the house may not be working or there may be an outage. Contact your local gas supplier.
One of the oven lights does not come on, but the oven works.	The light bulb is loose. The light bulb has blown.	See instructions for 'Replacing the oven light bulb' in section 'Care and cleaning'. Instead of replacing the bulb, simply ensure that it is secure in its socket. Replace the bulb. See instructions for 'Replacing the oven light bulb' in section 'Care and cleaning.'
Condensation around oven (e.g. on control panel or top of oven door.)	Food has high moisture content or local climate (temperature, humidity) is contributing to condensation.	Condensation is normal. You can wipe the drops off the control panel. If there is frequent or excessive condensation, make sure that cabinetry around the range is moisture-proofed.
Steam coming from oven vents at the back of the range.	Moisture from food evaporating during cooking.	This is normal, especially if you are cooking large quantities of food in the oven using a CONVECTION mode.
The convection fan does not come on in a CONVECTION mode.	Technical fault.	Contact your Authorized Service Center or Customer Care.

TROUBLESHOOTING GUIDE

Oven will not heat	Oven settings are not corrected	Follow mode selection and clock settings as specified in Oven Operation section of the manual.
Foods over-cooked or under-cooked	Incorrect cooking time or temperature.	Adjust time, temperature, or rack position.
'Cracking' or 'Popping' sound.	This is the sound of metal heating and cooling.	This is normal.
There is a power failure – can I still use the oven?	Power outage in your home or neighborhood.	The oven cannot be used until power is restored.

Warranty&Service

This product has been manufactured by Thor International, 4651 E Airport Dr, Ontario, CA 91761

For Customer Service, please call (877) 288 - 8099

For the most up to date warranty and service policy, please refer to our website
WWW.THORKITCHEN.COM/WARRANTY-REGISTRATION

For in-warranty service requests, please visit our website at
WWW.THORKITCHEN.COM/SERVICE

Please Note: You must provide proof of purchase or installation date for any in- warranty service requests

We Stand Behind the Quality of Our Appliances.

Reliability and customer satisfaction are our top priorities. We offer a solid two-year warranty on both parts and labor. Enjoy professional-grade performance with the confidence that we've got you covered.

Warranty Registration Made Easy.

01 Scan the QR Code or visit thorkitchen.com/register-your-product.

02 Input your purchase and product information and select register.

03 That's it. You're all set. Enjoy!

Questions: service@thorinternational.com

WARRANTY

PARTS