PRORUN®

GAS///

CHAINSAW

OPERATOR'S MANUAL

MODELS: PCS218

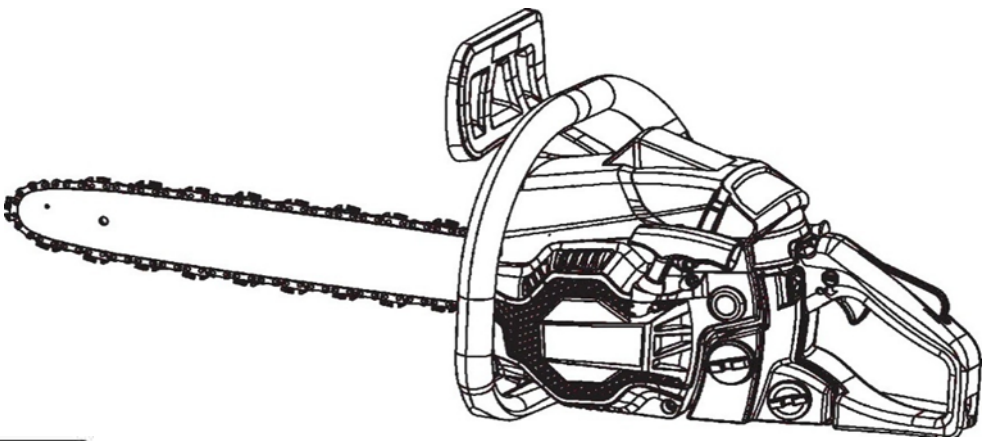

Everything PRORUN

⚠ **IMPORTANT – READ CAREFULLY BEFORE USE.**

⚠ **IMPORTANT SAFETY INSTRUCTIONS – SAVE THESE INSTRUCTIONS**

WARNING: To reduce the risk of injury, the user must read and understand the user manual before using this product. Keep these instructions for future reference.

Please let us know what you think. To leave a comment and see our complete product line, Visit:

PRORUNTOOLS.COM ★★★★★

1-844-905-0882, info@proruntech.com

Version: A – Issue Date: 3/27/2026

10130 Perimeter Pkwy Ste 140, Charlotte, NC 28216

1. PRODUCT SPECIFICATION

Engine	Displacement		45.02cc
	Engine Type		Single Cylinder 2-stroke
	Cooling System		Forced air-cooled
	Fuel	Type	87+ octane stabilizer-treated unleaded gasoline containing no more than 10% ethanol (E10) mixed with 2-Stroke oil (see below)
		Capacity	20.3 fl. oz.
	Oil	Type	2-Stroke oil must meet either JASO M345 FD or ISO-L-EGO requirements for air-cooled engines, synthetic
		Ratio	40:1 gasoline-to-oil ratio 3.2 oz of oil per gallon of gasoline
	Bore x Stroke		43mm x 31mm
	Compression Ratio		8.3 :1
	Spark Plug	Type	Champion® RCJ7Y / Bosch® L8RTF NGK® BPMR7A
		Gap	0.02 inch
	Speed	Idle	3000 ±400RPM
Chainsaw	Saw Chain	Length	18 inches
		Pitch	0.325 inch
		Gauge	0.058 inch
		Model	Oregon 21BPX072X
	Guide Bar	Length	18 inches
		Model	Oregon 188PXBK095
	Lubrication	Type	Bar and chain oil
		Capacity	8.8 fl. oz.

2. TABLE OF CONTENTS

1. PRODUCT SPECIFICATIONS 2
2. TABLE OF CONTENTS 3
3. SAFETY 4
4. SETUP 9
5. OPERATION 13
6. MAINTENANCE 22
7. TROUBLESHOOTING 29
8. EXPLODED VIEW & PARTS 33
9. WARRANTIES 41

3. SAFETY

WARNING SYMBOLS AND DEFINITIONS	
	**THIS SAFETY ALERT SYMBOL INDICATES POTENTIAL PERSONAL INJURY HAZARDS. FOLLOW ALL SAFETY INSTRUCTIONS ASSOCIATED WITH THIS SYMBOL TO REDUCE THE RISK OF INJURY OR DEATH.**
⚠ **DANGER!**	**INDICATES A HAZARDOUS SITUATION THAT, IF NOT AVOIDED, WILL RESULT IN DEATH OR SERIOUS INJURY.**
⚠ **WARNING!**	**INDICATES A HAZARDOUS SITUATION THAT, IF NOT AVOIDED, COULD RESULT IN DEATH OR SERIOUS INJURY.**
⚠ **CAUTION!**	**INDICATES A HAZARDOUS SITUATION THAT, IF NOT AVOIDED, COULD RESULT IN MINOR OR SERIOUS INJURY.**
NOTE	**PROVIDES ADDITIONAL INFORMATION TO PREVENT EQUIPMENT DAMAGE.**

SYMBOL DEFINITIONS

Symbol	Property or Statement
	**WARNING: Read and follow all safety precautions in the operator's manual(s).** Failure to follow instructions could result in serious personal injury.
	**WARNING: Risk of Loss of Control.** Do not operate the chainsaw with only one hand.
	**WARNING: Risk of Loss of Control.** Always use two hands when operating the chainsaw.
	Read the manual before setting up and/or using the chainsaw.
	**WARNING: Risk of Kickback.** Contact of the guide bar tip with any object should be avoided.

Symbol	Property or Statement
	Appropriate ear, eye, and head protection must be worn.
	Always wear safety and anti-vibration (AV) gloves when operating the device.
	Always wear safety and slip-resistant boots when operating the device.
	Cutters must face in the direction of rotation.
	Indicated the port to refuel the “MIXED GASOLINE”.
	Indicated the operation of the engine switch. Flip the switch to the “O” position to stop the engine immediately. “O” and “I” are shown on the switch button.
	The port to refill the chain oil
	Indicates the adjustment of the oil flow. Turn the screw with a screwdriver counterclockwise, and the saw chain oil flows more. Turn the screw clockwise, and the saw chain oil flows less.
	Indicates the operation of the choke knob. Pull the choke knob out to close the choke. Push the choke knob in to open the choke.
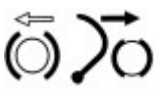	Indicates the direction that the chain brake is released (WHITE ARROW) and activated (BLACK ARROW).
H **L** **T**	The screw under the "H" stamp is The High-speed mixture adjustment screw. The screw under the "L" stamp is The Low-speed mixture adjustment screw. The screw up the "T" stamp is the idle speed adjustment screw.
I **O**	Operate the engine switch Flipping the switch to the "O" position, the engine immediately stops.

IMPORTANT SAFETY INSTRUCTIONS

SAVE THESE INSTRUCTIONS

This manual contains important instructions that should be followed during setup, operation, and maintenance of the Chainsaw.

SET UP PRECAUTIONS

1. Gasoline and fuel vapors are flammable and potentially explosive. Store and handle fuel in accordance with approved safety procedures. Do not store fuel or other flammable materials nearby.
2. Keep multiple ABC-rated fire extinguishers readily available.
3. Operation may generate sparks capable of igniting dry vegetation. A spark arrestor may be required. Consult local fire authorities for applicable fire prevention laws and regulations.
4. Set up and operate the equipment only on a flat, level, and well-ventilated surface.
5. Wear ANSI-approved safety goggles, heavy-duty work gloves, and a dust mask or respirator during operation.
6. Use only lubricants and fuel recommended in the Specifications chart of this manual.

OPERATING PRECAUTIONS

1. Operate the chainsaw only in accordance with the instructions and safety precautions in the operator's manual. The owner is responsible for ensuring that all operators receive and understand these instructions.
2. Keep children away from the equipment at all times, especially during operation.
3. Keep bystanders and spectators at least six feet away from the engine while operating.
4. Fire hazard: Do not refuel while the engine is running or hot. Do not operate the equipment if fuel has been spilled; clean spills thoroughly before starting. Keep away from open flames, sparks, and pilot lights.
5. Do not touch the engine during operation. Allow it to cool completely before handling or servicing.
6. Never store fuel or flammable materials near the engine. Secure the equipment during transport to prevent rolling, slipping, or tipping.
7. Industrial and commercial use must comply with applicable OSHA requirements.
8. Do not leave the equipment unattended while running. Shut off the engine and remove safety keys, if equipped, before leaving the work area.
9. The equipment produces high noise levels. Prolonged exposure above 85 dBA can cause hearing damage. Wear appropriate hearing protection during operation.
10. Wear proper personal protective equipment, including safety footwear, snug-fitting clothing, gloves, and eye, hearing, and head protection.
11. Individuals with pacemakers should consult a physician before use. Electromagnetic fields near the engine's magneto or recoil starter may interfere with pacemaker operation.
12. Use only accessories recommended by the manufacturer. Accessories suitable for one tool may be hazardous when used with another.
13. Do not operate in explosive or flammable atmospheres, including the presence of gases, liquids, or dust. Gasoline engines can ignite fumes or particles.

14. Stay alert and use common sense. Do not operate while fatigued or under the influence of alcohol, drugs, or medications that impair alertness.
15. Maintain proper footing and balance at all times. Avoid overreaching to maintain control of the equipment.
16. Operate the chainsaw with both hands at all times. One-handed operation can result in loss of control and serious injury.
17. Dress appropriately. Do not wear loose clothing or jewelry, and keep hair, clothing, and gloves clear of moving parts.
18. Exhaust and engine components become extremely hot during operation. Avoid contact with hot surfaces.
19. Do not cover the equipment while in operation.
20. Keep the equipment, engine, and surrounding area clean and free of debris.
21. Do not smoke or allow sparks, flames, or ignition sources near the equipment, especially during refueling.
22. Use the equipment only for its

23. intended purpose and under appropriate working conditions. Improper use may result in hazardous situations.
24. Do not operate the equipment if fuel system leaks are present.
25. Clean up fuel or oil spills immediately. Dispose of fluids and cleaning materials in accordance with all local, state, and federal regulations. Store oily rags in a covered, bottom-ventilated metal container.
26. Keep hands and feet away from moving parts. Do not reach over or across the equipment during operation.
27. Inspect the equipment before use for misalignment, binding, broken parts, or other conditions that could affect safe operation. Have damaged equipment serviced before use.
28. Use only equipment suitable for the application. Do not modify the equipment or use it for unintended purposes.
29. Never operate the chainsaw while fatigued, ill, emotionally distressed, or under the influence of alcohol, drugs, or impairing medication.

CHAINSAW SAFETY WARNING

1. Keep all body parts away from the saw chain while the chainsaw is operating. Before starting, ensure the saw chain is not contacting any object. Momentary inattention can result in clothing or body entanglement with the chain.
2. Always hold the chainsaw with the right hand on the rear handle and the left hand on the front handle. Reversed hand positions increase the risk of serious injury and must never be used.
3. Hold the chainsaw only by insulated gripping surfaces. Contact between the saw chain and hidden electrical wiring may energize exposed metal parts, resulting in electric shock.
4. Wear approved eye and hearing protection. Additional protective equipment for the head, hands, legs, and feet is recommended. Proper protective clothing reduces the risk of injury from flying debris or accidental chain contact.
5. Do not operate a chainsaw while in a tree. Tree operation significantly increases the risk of personal injury.
6. Keep all bystanders and animals clear of the work area when starting or operating the chainsaw. Ensure a clear work area, secure footing, and a planned retreat path before cutting.

7. When cutting limbs under tension, be alert for spring-back. Releasing wood fiber tension may cause the limb or chainsaw to move suddenly and strike the operator.
8. Use extreme caution when cutting brush and saplings. Small or flexible material may catch the chain and whip toward the operator or pull the saw off balance.
9. Carry the chainsaw by the front handle with the engine stopped, the guide bar and chain facing rearward, and the muffler away from the body. Always install the guide bar cover during transport or storage.
10. Follow instructions for chain lubrication, tensioning, and accessory replacement. Improper chain tension or lubrication increases the risk of chain breakage or kickback.
11. Keep handles dry, clean, and free of oil or grease to maintain control of the tool.
12. Cut wood only. Do not use the chainsaw to cut plastic, masonry, or non-wood building materials. Misuse may result in hazardous conditions.

KICKBACK HAZARDS

1. Kickback may occur when the nose of the guide bar contacts an object or when wood pinches the saw chain during cutting. Either condition can cause sudden loss of control and serious injury. Do not rely solely on built-in safety devices.

To reduce the risk of kickback:

a. Understand kickback and how it occurs to reduce surprise reactions.
b. Maintain a firm, two-handed grip with thumbs and fingers fully encircling the handles while the engine is running.
c. Ensure the cutting area is free of obstruction. Avoid contact between the guide bar tip and any object.
d. Cut at proper engine speed to maintain control.
e. Do not overreach or cut above shoulder height.
f. Follow manufacturer instructions for chain sharpening and maintenance.
g. Use only guide bars and chains specified by the manufacturer or approved equivalents. Altering depth gauge settings increases kickback risk.

2. Maintain all safety labels and nameplates. If labels are missing or unreadable, contact the manufacturer for replacements.
3. Do not leave the chainsaw unattended while running. Turn off the engine before leaving the work area.
4. This product is not a toy. Keep it out of reach of children.
5. Individuals with pacemakers should consult a physician before use. Electromagnetic fields near the engine may interfere with pacemaker function.
6. The warnings and instructions in this manual do not cover all possible conditions. Safe operation requires common sense, caution, and operator judgment.

4. SETUP

Read the ENTIRE IMPORTANT SAFETY INFORMATION section at the beginning of this manual, including all text under subheadings therein, before setting up or using this chainsaw.

TO PREVENT SERIOUS INJURY:

Operate only with a proper spark arrestor installed.



Operation of this equipment may create sparks that can start fires around dry vegetation.
A spark arrestor may be required.
The operator should contact local fire agencies for laws or regulations relating to fire prevention requirements.

TO PREVENT SERIOUS INJURY FROM ACCIDENTAL STARTING:

Make sure that the Engine is switched **OFF**, wait for the Engine to cool, and unplug the spark plug wire before performing any procedure in this section.

At high altitudes, the engine's carburetor, governor (if so equipped), and any other parts that control the fuel-air ratio will need to be adjusted by a qualified mechanic to allow efficient high-altitude use and to prevent damage to the engine and any other devices used with this product. Contact PRORUN Customer Service.

COMPONENTS AND CONTROL

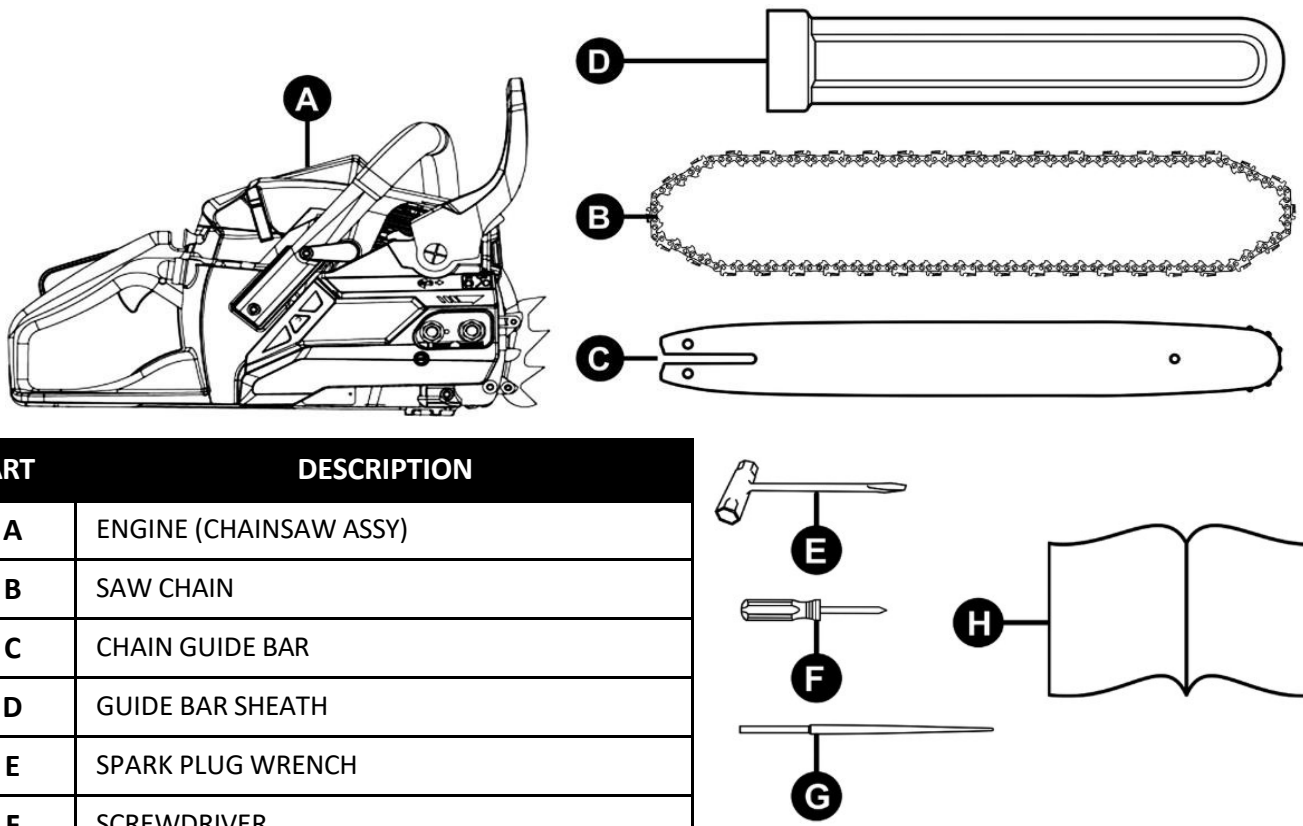

PART	DESCRIPTION
A	ENGINE (CHAINSAW ASSY)
B	SAW CHAIN
C	CHAIN GUIDE BAR
D	GUIDE BAR SHEATH
E	SPARK PLUG WRENCH
F	SCREWDRIVER
G	FILE
H	OPERATOR'S MANUAL

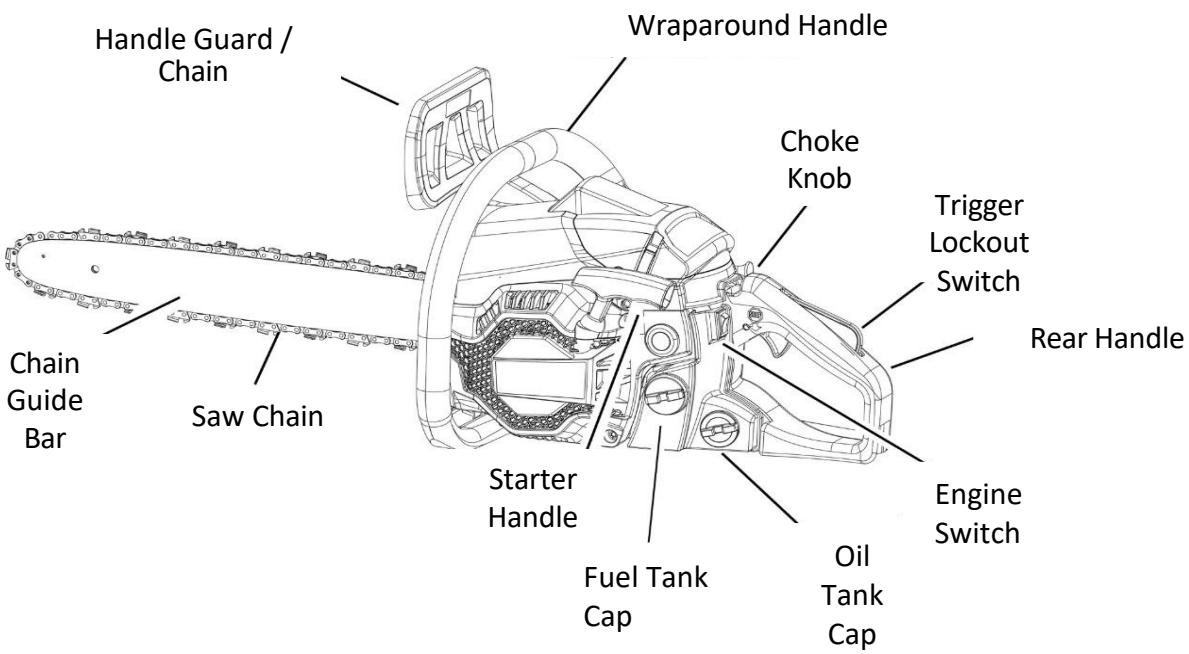

GUIDE BAR AND SAW CHAIN INSTALLATION AND ADJUSTMENT

⚠ **WARNING!**

TO PREVENT SERIOUS INJURY FROM ACCIDENTAL OPERATION:

Make sure that the Engine is switched **OFF**, wait for the Engine to cool, and unplug the spark plug wire before performing any procedure in this section.

NOTE:

New Saw Chains often need to be tensioned several times during the first use. Check a new Saw Chain's tension often when first using.

Follow the directions in the following sections for installing the Guide Bar and Saw Chain, for checking and adjusting Saw Chain tension, and for replacing the Saw Chain when necessary.

GUIDE BAR / SAW CHAIN INSTALLATION/REPLACEMENT

1. Pull the Hand Guard / Chain Brake Lever back toward the rear to make sure the chain brake is not on.
2. Loosen and remove the Drive Cover Nuts, then remove the Drive Cover from the Saw.
3. Place the Saw Chain over the Guide Bar. The cutters of the Saw Chain must face away from the Chainsaw along the top edge of the Guide Bar. Fit the Drive Links into the groove around the Guide Bar.
4. Place the slotted end of the Chain Guide Bar over the Guide Bar Bolts and place the Saw Chain over the Drive Sprocket. Refer to Figure 3.
5. Check again that the Saw Chain cutters are aligned properly and the Saw Chain Drive Links are seated completely in the slot of the Guide Bar. The cutters of the Saw Chain must face away from the Chainsaw along the top edge of the Guide Bar.

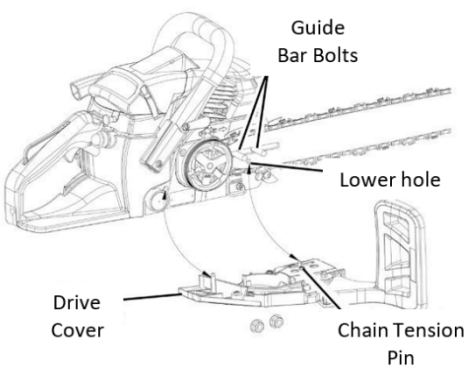

Figure 3:
Installing Guide Bar and Chain

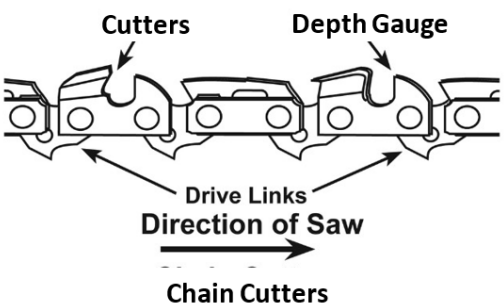

Figure 4: Saw Chain Orientation

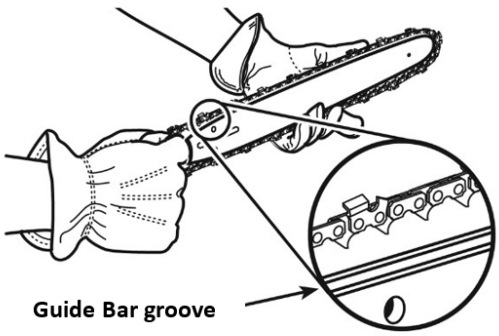

Figure 2: Saw Chain Orientation

6. Replace the Drive Cover, making sure the Chain Tension Pin on the Cover is inserted into the lower hole on the Guide Bar as shown in Figure 2. Replace the Drive Cover Nuts and tighten so that the Cover is snug, but not tight. Tension the Saw Chain following the steps in Checking Saw Chain Tension and Adjusting Saw Chain Tension on page 12.

CHECKING SAW CHAIN TENSION

1. Before using, check the Saw Chain tension.
2. While wearing heavy-duty gloves, use your index finger and thumb to carefully grab the Saw Chain in the middle section under the Chain Guide Bar.
3. Pull the Saw Chain away from the Guide Bar.
4. The Saw Chain should snap back against the Guide Bar. The Chain should fit snugly in the groove of the Chain Guide Bar, yet you should still be able to slide the chain along the Chain Guide Bar by hand.
5. There should be no sagging between the Guide Bar and Saw Chain on the underside of the Guide Bar.

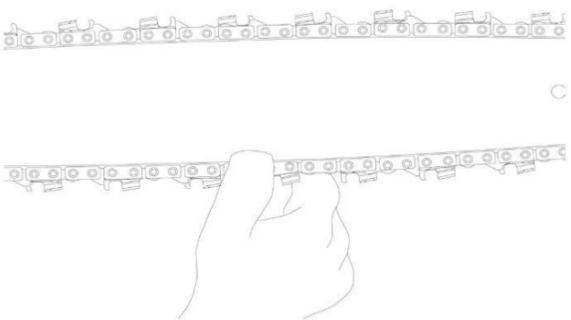

Figure 5: Checking Saw Chain Tension

ADJUSTING SAW CHAIN TENSION

1. Loosen the Drive Cover Nuts on the Drive Cover. It is not necessary to remove the Drive Cover to adjust chain tension.
2. Turn the Chain Tension Screw clockwise to increase chain tension and counterclockwise to decrease tension.
3. Tighten the Drive Cover Nuts on the Drive Cover while holding the Chain Guide Bar up.
4. Check the Saw Chain tension again, following steps 2 through 5 under Checking Saw Chain Tension above. If needed, repeat the adjusting steps to achieve the correct tension.

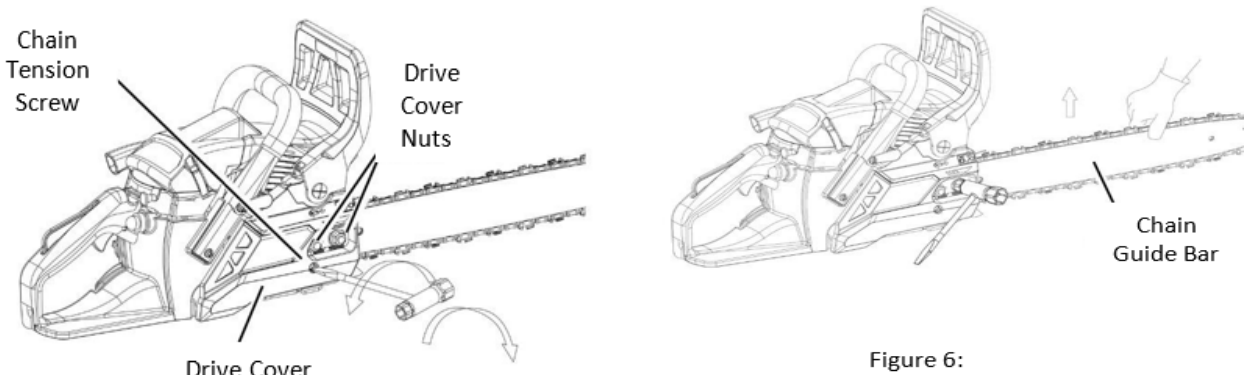

Figure 6:
Adjusting Saw Chain Tension

5. OPERATION

Read the ENTIRE IMPORTANT SAFETY INFORMATION section at the beginning of this manual, including all text under subheadings therein, before setting up or using this chainsaw.

CHECKING SAW CHAIN TENSION

Inspect the engine and equipment, looking for damaged, loose, and missing parts before setting up and starting. If any problems are found, do not use the chainsaw until fixed properly.

CHECKING AND FILLING FUEL

⚠ **WARNING!**

TO PREVENT SERIOUS INJURY FROM FIRE:

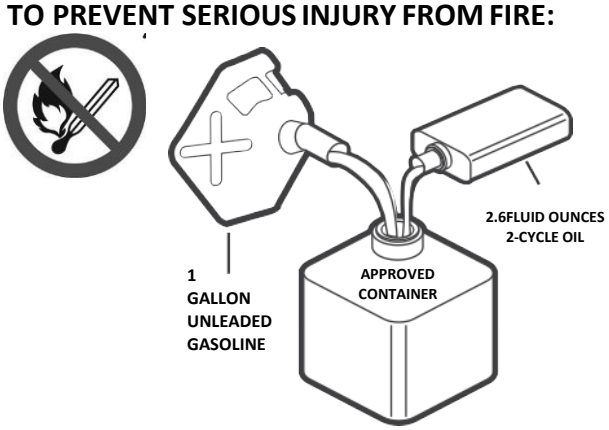

Fill the fuel tank in a well-ventilated area away from ignition sources. If the engine is hot from use, shut the engine off and wait for it to cool before adding fuel. Do not smoke.

1. Clean the Fuel Tank Cap and the area around it.
2. Unscrew and remove the Fuel Tank Cap.

NOTE:

Do not use gasoline containing more than 10% ethanol (E10). Do not use E85 ethanol. Add fuel stabilizer to the gasoline, or the Warranty is VOID.

NOTE:

Do not use gasoline that has been stored in a metal fuel container or a dirty fuel container. It can cause particles to enter the carburetor, affecting engine performance and/or causing damage.

⚠ **IMPORTANT:**

Your Warranty is VOID if the Engine's Fuel Tank is not filled with the proper mixture (50:1) of unleaded gasoline and 2-cycle oil before each use.

2-Stroke oil must meet either JASO M345 FD or ISO-L-EGD requirements for air-cooled engines, synthetic. Before each use, check the fuel level. Do not run the Engine with an improper unleaded gasoline/2-cycle oil mixture. Running the Engine with an improper mixture WILL permanently damage the Engine.

3. To obtain the proper gasoline and 2-cycle oil mixture, mix 2.6 fluid ounces of 2-cycle oil with 1 gallon of unleaded gasoline into an approved container. Then gently agitate the

container to thoroughly mix the
4. gasoline/2-cycle oil.
5. If needed, fill the Fuel Tank to about 1 inch under the fill neck of the Fuel Tank with the pre-mixed unleaded gasoline/2-cycle oil mixture.
6. Then replace the Fuel Tank Cap.
7. Wipe up any spilled fuel and allow excess to evaporate before starting the engine. To prevent a fire, do not start the engine while the smell of fuel hangs in the air.
8. Use caution when handling fuel. Move the blower at least 10 feet (3 m) from the fueling point before starting the engine.

STARTING THE ENGINE

Before starting the engine

a. inspect the equipment and engine.
b. Fill the engine with the proper amount and type of unleaded gasoline and 2-cycle oil mixture.
c. Fill the oil tank with the proper amount and type of bar and chain oil.

MANUAL START

A "cold start" is when the engine is no longer hot to the touch, typically at least 30 minutes after it has last been run.

1. To start a cold Engine or the first start of the day, ensure the Guide Bar and Saw Chain are not touching or near any object, as the chain will spin during startup. Push the Hand Guard / Chain Brake Lever forward to engage the chain brake.

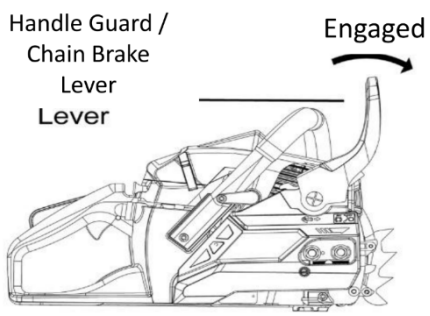

Figure 8: Lock the Handle Guard

2. Put the engine switch to the “I” position.

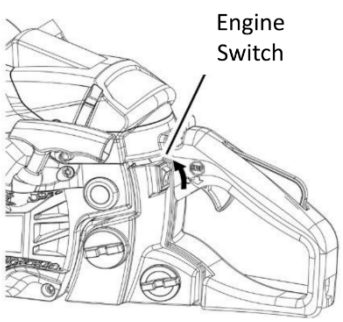

Figure 9: Put the Engine Switch

3. Press the Prime Bulb up to 10 times until the Bulb begins to fill with fuel.

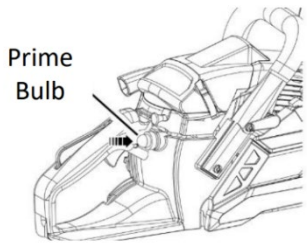

Figure 10:
Press on the Prime Bulb

4. Pull out the Choke Knob to the START (closed) position.

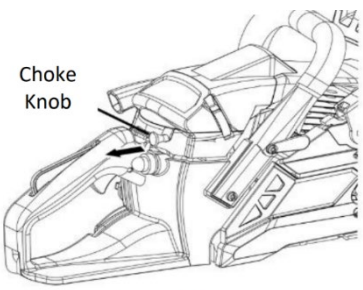

Figure 11:
Pull Out the Choke Knob

5. Hold the chainsaw securely on the ground. Firmly grasp the starter handle and pull it rapidly until the engine sputters.

NOTE:
Do not let the starter handle snap back against the engine. Hold it as it recoils so it doesn't hit the engine.

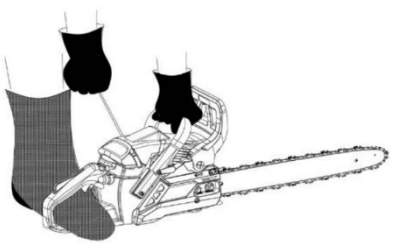

Figure 12: Starting the Engine

6. Pull back the choke knob to the RUN (open) position-this will partially engage the throttle to assist start

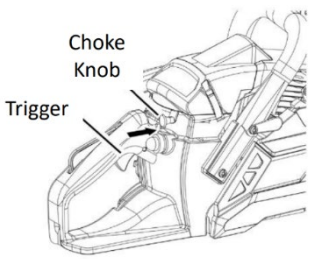

Figure 13:
Press Back the Choke Knob

Pull the Starter Handle rapidly until the Engine starts. Immediately disengage the chain brake by pulling back on the Hand Guard / Chain Brake Lever.

⚠ **CAUTION!**

The Saw Chain will immediately start spinning with the Engine running at partial throttle. Allow the Engine to run at partial throttle for 5 seconds. Quickly squeeze and then release the trigger to disengage the throttle assist and allow the Engine to idle. Allow the Engine to warm up at idle for 60 seconds after each start-up so that the Engine can stabilize before use.

TO RESTART A WARM ENGINE

Follow the starting instructions above with the following exception:
Omit the portion of Step 5 which states — Firmly grasp the Starter Handle and pull it rapidly until the Engine sputters - and proceed to Step 6.

TO SWITCH BETWEEN OPERATING MODES

1. Flip the engine switch to turn off the engine.
2. Remove the cover to the air filter, remove the air filter, and then remove the choke knob from the cylinder cover.
3. Loosen the screws holding the cylinder cover in place (i.e., the three screws on the inside and the one screw on the outside of the cover) and then remove the cylinder cover.
4. Press with your finger down on the icing cap • located on the right-hand side of the cylinder cover to remove the icing cap.
5. Adjust the icing cap so that the "snow" mark faces upwards and then return it to its original position in the cylinder cover.
6. Fix the cylinder cover back into its original position and then fix all other parts back into their proper positions.

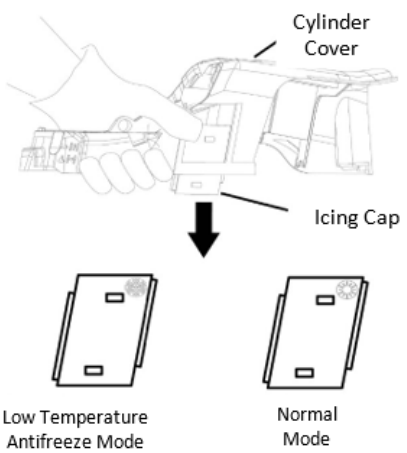

Figure 14:
Exchange the Icing Cap

STOPPING THE ENGINE

1. To stop the engine in an emergency, release the Trigger and press the Stop Engine Switch.
2. Under normal conditions, use the following procedure:
   - **A.** Release the Trigger.
   - **B.** Let the engine idle 3 to 5 minutes.
   - **C.** Press the Stop Engine Switch.

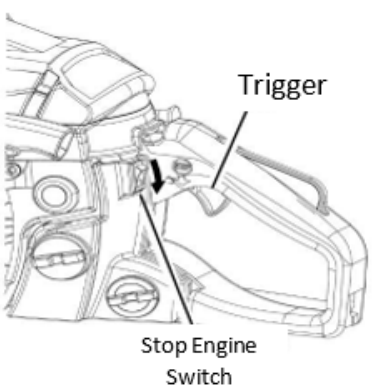

Figure 15: Stop the Engine

WORKPIECE AND WORK AREA SET UP

1. Designate a work area that is clean and well-lit. Do not allow access by children or pets to prevent distraction and injury.
2. There must not be objects, such as utility lines, nearby that will present a hazard while working.
3. A first-time user should, as a minimum practice, cut logs on a sawhorse or cradle before cutting down trees.

GENERAL OPERATING INSTRUCTIONS

1. Before first use and before each use thereafter, remove the Oil Tank Cap. Inspect the Cap Gasket for damage. Fill the Oil Tank to just below the fill plug with oil (not included). Refer to the Specifications chart on page 30 for oil type. Then replace the Oil Tank Cap. Oil is automatically applied to the Saw Chain during operation.

2. Start the Engine as detailed in Starting the Engine on page 14. If necessary, adjust the engine idle speed so the Saw Chain does not rotate at idle. To adjust, turn the Idle Adjusting Screw (T) counterclockwise to lower the idle speed until the chain does not turn. Refer to Figure 16.

Figure 16.

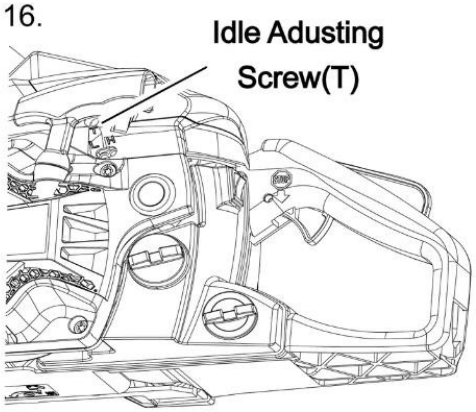

Figure 16: Idle Adjusting Screw

3. Place the Hand Guard / Chain Brake Lever in normal operating (disengaged) position by pulling the Hand Guard back toward the Handle. Refer to Figure 17.

NOTE:

The Chainsaw will not operate unless the Hand Guard / Chain Brake Lever is in the disengaged position

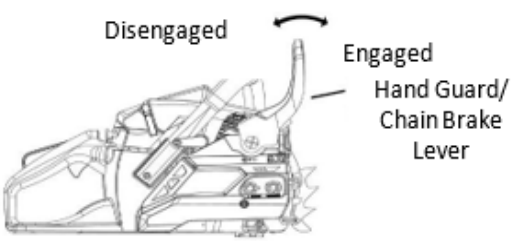

Figure 17: Hand Guard/Chain Brake Lever

4. Grasp the Handles with both hands. Always grip the handle with the thumb and fingers encircling the handle as shown in Figure 18.

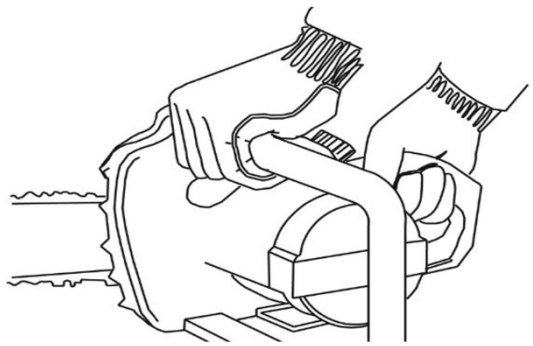

Figure 18: Holding the Chainsaw

NOTE:
Front Hand Guard not shown.

5. Stand in front of the wood to be cut with your feet firmly in place.
6. Grasp the Rear Handle to activate the Trigger Lockout Switch, then squeeze and hold the Trigger. Releasing the Trigger will return the Engine to idling speed

NOTE:
The Trigger cannot be activated unless the Trigger Lockout Switch is depressed.

⚠ **DANGER!**
To prevent serious injury and death from kickback: Do not touch the Guide Bar Nose to the wood.

7. When the Chainsaw reaches full speed, begin cutting with a light, downward pressure against the bottom mid-section of the Saw Chain. Allow the Saw Chain to cut at its own rate. Applying too much pressure can damage the tool.

⚠ **DANGER!**
To prevent serious injury and death from kickback: When cutting loose, round wood stock, place the wood stock on a sawhorse, in a cradle, or use a timber jack (all sold separately) to avoid grabbing and throwing back.

8. When cutting is complete, release the Trigger, allow the Engine to idle 3 to 5 minutes, then press the Stop Engine Switch. To prevent accidents, place the Hand Guard / Chain Brake Lever forward in its engaged position after use.
9. When the Saw has cooled completely, clean thoroughly and cover the Chain Guide Bar with the Chain Guide Bar Sheath. Store the tool indoors out of children's reach. See Long-Term Storage on page 25 for complete storage instructions.

INSTRUCTIONS CONCERNING THE PROPER TECHNIQUES FOR BASIC FELLING, LIMBING, AND CROSS-CUTTING

When bucking and felling operations are being performed by two or more persons at the same time, the felling operations should be separated from the bucking operation by a distance of at least twice the height of the tree being felled. Trees should not be felled in a manner that would endanger any person, strike any utility line, or cause any property damage. If the tree does contact any utility line, the company should be notified immediately.

The chainsaw operator should keep on the uphill side of the terrain as the tree is likely to roll or slide downhill after it is felled.

An escape path should be planned and cleared as necessary before cuts are started. The escape path should extend back and diagonally to the rear of the expected line of fall, as illustrated in Figure 19.

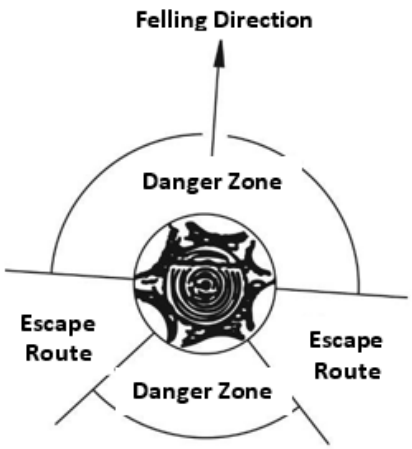

Figure 19: Escape Routes

Before felling is started, consider the natural lean of the tree, the location of larger branches, and the wind direction to judge which way the tree will fall.

Remove dirt, stones, loose bark, nails, staples, and wire from the tree.

The Spiked bumper must always be put on while using the chainsaw on a tree trunk. Push the spiked bumper into the tree trunk by using the rear handle. Push the front handle in the direction of the cutting line. The spiked bumper must remain set for further saw guiding if necessary. Use a spiked bumper when cutting trees and thick branches to ensure your safety and decrease the working strength and vibration level.

If there's debris between the cutting material and the chainsaw, turn off the machine. Wait until it stops completely. Wear the safety glove and remove the debris. If the chain must be removed, please follow the instructions of the relevant part in the manual. A trial run must be conducted after the cleaning and reinstallation. If vibration or mechanical noise is discovered, please stop the use and contact your dealer.

Contact PRORUN Customer Service.

NOTCHING UNDERCUT

Make the notch 1/3 the diameter of the tree, perpendicular to the direction of falls, as illustrated in Figure 20. Make the lower horizontal notching cut first. This will help to avoid pinching either the saw chain or the guide bar when the second notch is being made.

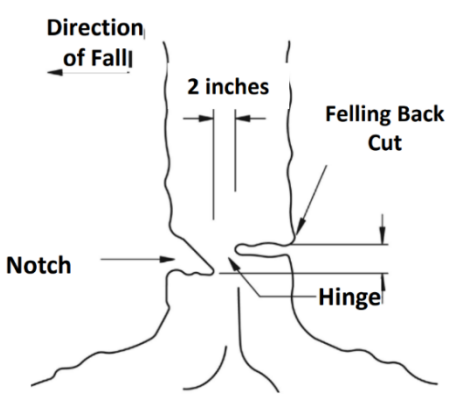

Figure 20: Undercutting

FELLING BACK CUT

Make the felling back cut at least 2 inches higher than the horizontal notching cut, as illustrated in Figure 19. Keep the felling back cut parallel to the horizontal notching cut. Make the felling back cut so enough wood is left to act as a hinge. The hinge wood keeps the tree from twisting and falling in the wrong direction. Do not cut through the hinge. As the felling gets close to the hinge, the tree should the tree may not fall in the desired direction, or it may

rock back and bind the saw chain. Stop cutting before the felling back cut is complete, and use wedges of wood, plastic, or aluminum to open the cut and drop the tree along the desired line of fall. When the tree begins to fall, remove the chainsaw from the cut, stop the motor, put the chainsaw down, then use the retreat path planned. Be alert for overhead limbs falling and watch your footing.

LIMBING A TREE

Limbing is removing the branches from a fallen tree. When limbing, leave the larger lower limbs to support the log off the ground. Remove the small limbs in one cut as illustrated in Figure 21. Branches under tension should be cut from the bottom up to avoid binding the chainsaw.

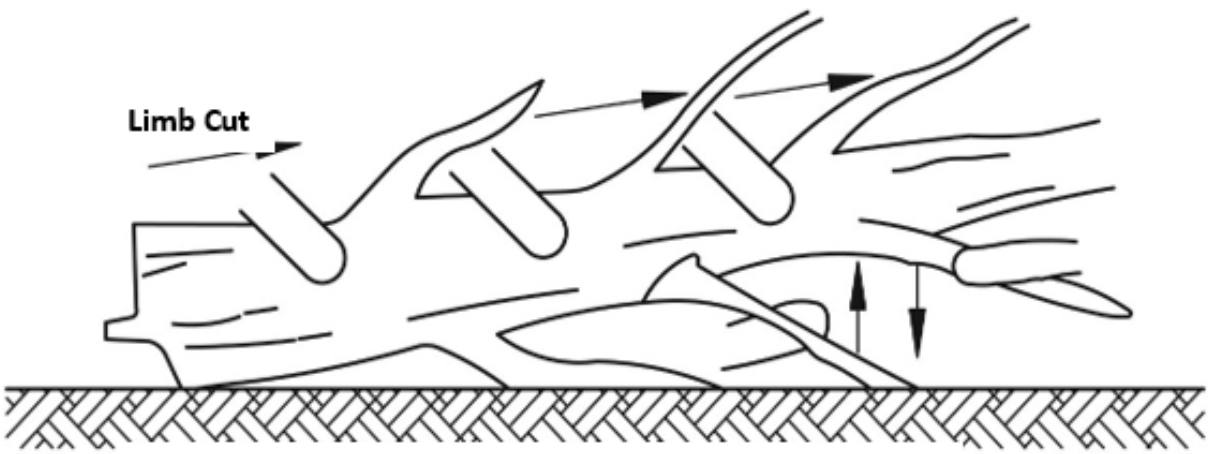

Keep working off the ground leave support limbs until the log is cut. Figure 21: Tree Limbing.

BUCKING A LOG

Bucking is cutting a log into lengths. It is important to make sure your footing is firm and your weight is evenly distributed on both feet. When possible, the log should be raised and supported by the use of limbs, logs, or chocks. Follow the simple directions for easy cutting.
When the log is supported along its entire length, as illustrated in Figure 22, it is cut from the top.

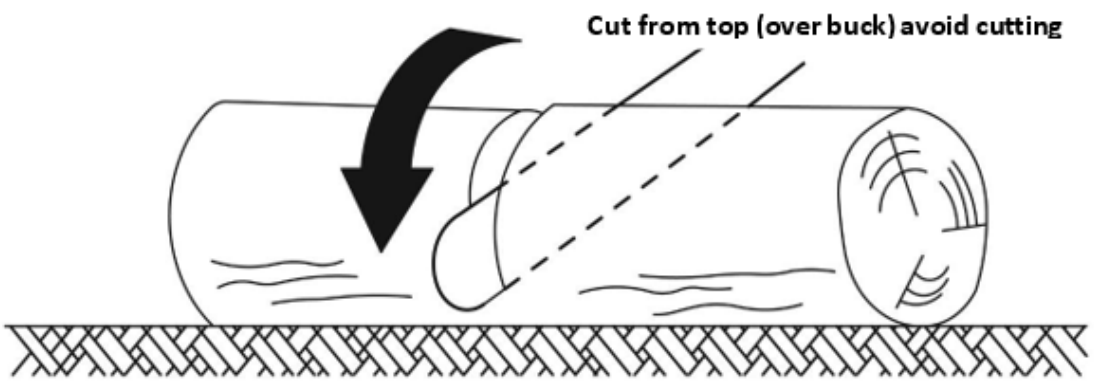

Figure 22: Log Supported Along the Entire Length

When the log is supported on one end, as illustrated in Figure 23, cut 1/3 of the diameter from the underside (under buck). Then make the finished cut by over-bucking to meet the first cut.

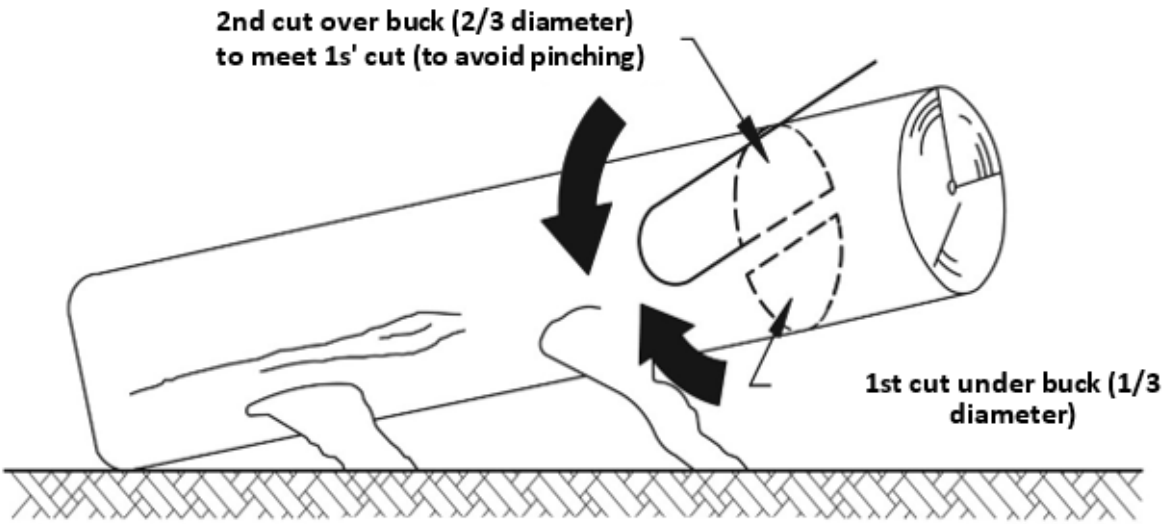

Figure 23: Log Supported One End

When the log is supported on both ends, as illustrated in Figure 24, cut 1/3 of the diameter from the top (over buck). Then make the finished cut by under bucking the lower 2/3 to meet the first cut.

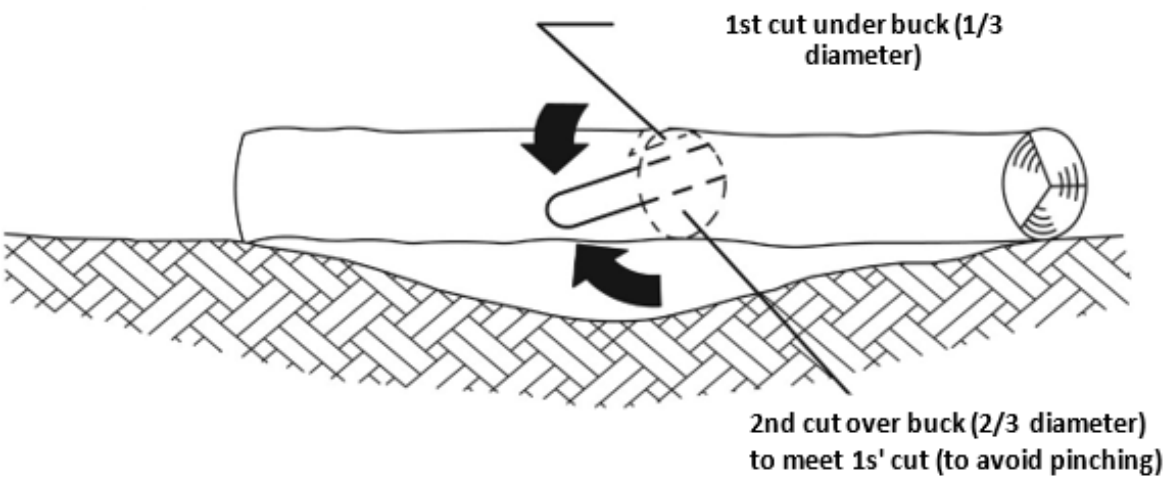

Figure 24: Log Supported Both Ends

When bucking on a slope, always stand on the uphill side of the log, as illustrated in Figure 25. When "cutting through", to maintain complete control, release the cutting pressure near the end of the cut without relaxing your grip on the chainsaw handles. Don't let the chain contact the ground. After completing the cut, wait for the saw chain to stop before you move the chainsaw. Always stop the motor before moving from tree to tree.

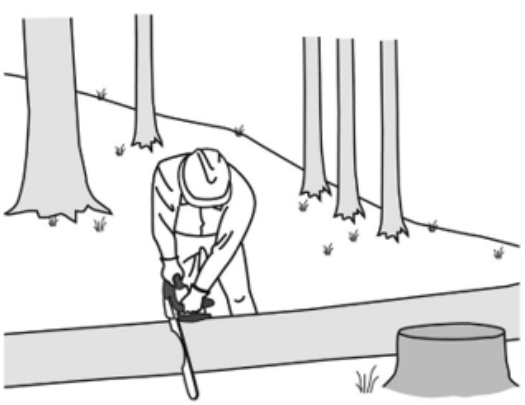

Stand on the uphill side when cutting because the log may roll
Figure 25: Bucking a Log

6. MAINTENANCE

⚠ WARNING!

TO PREVENT SERIOUS INJURY FROM ACCIDENTAL STARTING:
Turn the Power Switch of the equipment to its "**OFF**" position, wait for the engine to cool, and disconnect the spark plug cap before performing any inspection, maintenance, or cleaning procedures.

TO PREVENT SERIOUS INJURY FROM EQUIPMENT FAILURE:
Do not use damaged equipment. If abnormal noise, vibration, or excess smoking occurs, maintenance procedures, including any not detailed in this manual, will need to be performed by a qualified technician for safety. If you have any doubts about your ability to safely service the equipment or engine, contact PRORUN Customer Service and have an approved technician service the equipment instead.

CLEANING, MAINTENANCE, AND LUBRICATION

1. BEFORE EACH USE
Inspect the general condition of the tool. Check for:

- Loose hardware
- Misalignment or binding of moving parts
- Cracked or broken parts
- Dull or damaged saw chain
- Any other condition that may affect its safe operation.

2. BEFORE FIRST USE AND BEFORE EACH USE THEREAFTER,
Make sure the Oil Tank is filled with oil (not included). Refer to the Specifications Chart on page 30 for oil type.

3. IF THE SAW CHAIN BECOMES LOOSE,
Adjust the Saw Chain tension as described under Adjusting Saw Chain Tension on page 13.

4. PERIODICALLY OR WHEN REPLACING THE SAW CHAIN
Turn the Chain Guide Bar over to distribute the wear on it. Replace the Guide Bar when bent, cracked, or when the Saw Chain moves excessively from side to side on the Guide Bar due to wear. Refer to Chain Guide Bar Care on page 23.

⚠ WARNING!

TO PREVENT SERIOUS INJURY:
Replace the Saw Chain and Guide Bar only with an identical Saw Chain and Guide Bar.

5. AFTER USE
When the Saw has cooled completely, clean thoroughly and cover the Chain Guide Bar with the Chain Guide Bar Sheath. Do not use solvents. Do not immerse this tool in liquid. Store the tool indoors out of children's reach. See Long-Term Storage on page 25 for complete storage instructions

NOTE:

This maintenance schedule is intended solely as a general guide. If performance decreases or if equipment operates unusually, check systems immediately. The maintenance needs of each piece of equipment will differ depending on factors such as duty cycle, temperature, air quality, fuel quality, and other factors. If you have doubts about your ability to safely service this tool, contact PRORUN Customer Service and have an approved technician service the equipment instead.

NOTE:

The following procedures are in addition to the regular checks and maintenance explained as part of the regular operation of the engine and equipment.

Procedure	Before Each Use	Monthly or every 10 hr. of use	Every 3 mo. or 20 hr. of use	Every 6 mo. or 50 hr. of use	Yearly or every 100 hr. of use	Every 2 Years
Brush off the outside of the engine	X					
Check the engine fuel/oil mixture level	X					
Change the fuel filter					X	X
Clean air filter			X	X	X	X
Check and clean the spark plug				X	X	X
Check/adjust idle speed	X					
1. Clean fuel tank and carburetor 2. Clean carbon build-up from the combustion chamber					X	X
Replace the fuel line if necessary						X

Service more frequently when used in dusty areas.
Contact PRORUN Customer Service. These items should be serviced by an authorized service technician.

PERIODIC MAINTENANCE OR WHEN REPLACING SAW CHAIN

A. Clean and lubricate Chain Guide Bar
B. Check Chain Sprocket for wear or damage, turn over.
C. Deburr Guide Bar as needed.

MONTHLY MAINTENANCE

Clean Chain Oil Tank.

IF WORN OR DAMAGED

A. Replace Chain Guide Bar if it becomes worn, bent, or damaged.
B. Sharpen or replace Saw Chain.

SHARPENING/REPLACING THE SAW CHAIN

⚠ CAUTION!

Wear heavy-duty work gloves when handling the Saw Chain.

1. For smooth and safe operation, always keep the Saw Chain cutters sharp.
2. Have the cutters sharpened by a qualified technician when you notice any of the following symptoms:
   - **A.** The sawdust becomes powder-like.
   - **B.** You can't make the cut without extra force.
   - **C.** The Chainsaw does not cut straight.
   - **D.** Vibration increases.
3. A Saw Chain that is damaged or too worn to be restored to a usable condition by sharpening will need to be replaced. Refer to Guide Bar / Saw Chain Installation/Replacement on page 12.

⚠ WARNING!

TO PREVENT SERIOUS INJURY:
Replace the Saw Chain only with an identical Saw Chain.
Don't use a replacement saw chain unless it has been designated as meeting the kickback performance requirements in ANSI/OPEI B175.1-2012 on that specific power head.
A low-kickback saw chain is a chain that has met the kickback performance requirements of ANSI/OPEI B175.1-2012 when tested according to the provisions specified in ANSI/OPEI B175.1-2012.

File diameter	Top plate angle	Down angle	Side angle
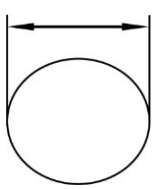	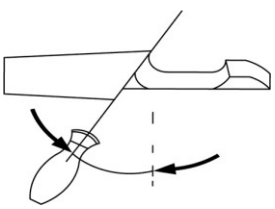	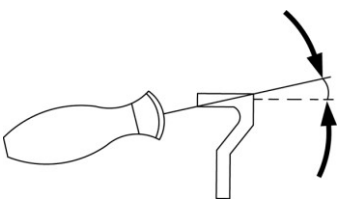	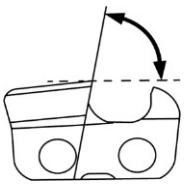
3/16 inch	**30°**	**10 °**	**70°**

CHAIN GUIDE BAR CARE

Remove the Chain Guide Bar periodically to clean and lubricate.

1. Deburr rails of Guide Bar as needed. Use a
2. flat file to make side edges square.
3. Remove sawdust and sap from the Bar Groove using a Guide Bar cleaning tool (sold separately), then lubricate the nose sprocket at the ports with grease.
4. Reverse the Guide Bar when replacing the Saw Chain to prevent uneven wear.

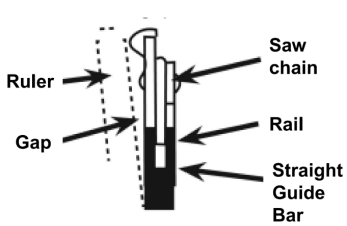

Figure 26: Normal Guide Bar

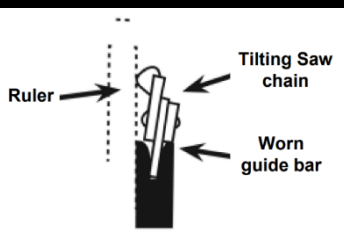

Figure 27: Worn Guide Bar

5. The rails of the Guide Bar groove should always be parallel to each other. Place a ruler along the surface of the Guide Bar and Saw Chain. If there is a gap, the bar is normal.
6. If the ruler is flush with the Guide Bar and Saw Chain, or the Chain tilts to one side, then the Bar is worn and needs to be replaced.

Checking and Filling Fuel

⚠ **WARNING!**



TO PREVENT SERIOUS INJURY FROM FIRE:

Fill the fuel tank in a well-ventilated area away from ignition sources. If the engine is hot from use, shut the engine off and wait for it to cool before adding fuel. Do not smoke.

1. Clean the Fuel Tank Cap and the area around it.
2. Unscrew and remove the Fuel Tank Cap.

NOTE:

Do not use gasoline containing more than 10% ethanol (E10). Do not use E85 ethanol. Add fuel stabilizer to the gasoline, or the Warranty is VOID.

NOTE:

Do not use gasoline that has been stored in a metal fuel container or a dirty fuel container. It can cause particles to enter the carburetor, affecting engine performance and/or causing damage.

⚠ **IMPORTANT!**

Your Warranty is VOID if the Engine's Fuel Tank is not filled with the proper mixture (50:1) of unleaded gasoline and 2-cycle oil before each use.

2-Stroke oil must meet either JASO M345 FD or ISO-L-EGD requirements for air-cooled engines, synthetic.

Before each use, check the fuel level. Do not run the Engine with an improper unleaded gasoline/2-cycle oil mixture. Running the Engine with an improper mixture WILL permanently damage the Engine.

1. To obtain the proper gasoline and 2-cycle oil mixture, mix 2.6 fluid ounces of 2-cycle oil with 1 gallon of unleaded gasoline into an approved container. Then gently agitate the container to thoroughly mix the gasoline/2-cycle oil.
2. If needed, fill the Fuel Tank with the pre- mixed unleaded gasoline/2-cycle oil mixture. Do not fill fuel above the bottom of the Fuel Tank fill neck.
3. Then replace the Fuel Tank Cap.
4. Wipe up any spilled fuel and allow excess to evaporate before starting the engine. To prevent fire, do not start the engine while the smell of fuel hangs in the air.

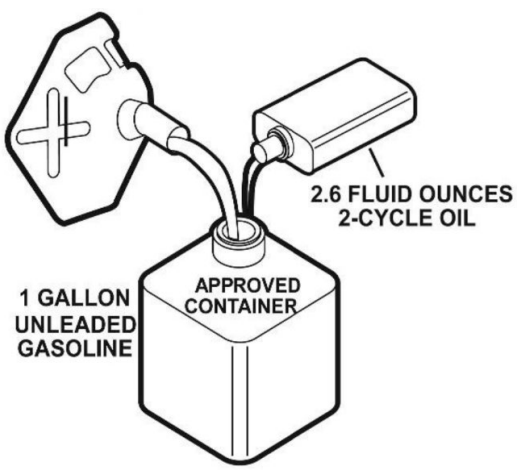

Figure 28 :Fuel-Oil Mixture

SPARK PLUG MAINTENANCE

1. Remove the Air Filter Cover.
2. Disconnect the Spark Plug Cap from the end of the plug. Clean out debris from around the Spark Plug.
3. Using a spark plug wrench, remove the Spark Plug.
4. Inspect the Spark Plug: If the electrode is oily, clean it using a clean, dry rag. If the electrode has deposits on it, polish it using emery paper. If the white insulator is cracked or chipped, the spark plug needs to be replaced.

Recommended Spark Plugs	
Bosch®	L8RTF
Champion®	RCJ7Y
NGK®	BPMR7A

NOTE:

Using an incorrect spark plug may damage the engine.

5. When installing a new spark plug, adjust the plug's gap to the specification on the Specifications chart. Do not pry against the electrode; the spark plug can be damaged.
6. Install the new spark plug or the cleaned spark plug into the engine.
   - **Gasket-style:**

   Finger-tighten until the gasket contacts the cylinder head, then tighten about 1/2-2/3 turn more.

   - **Non-gasket-style**:

   Finger-tighten until the plug contacts the cylinder head, then tighten about 1/16 turn more.

NOTE:

Tighten the Spark Plug properly.
If loose, the Spark Plug will cause the engine to overheat.
If overtightened, the threads in the engine block will be damaged.

7. Reattach the Spark Plug Cap securely.

AIR FILTER MAINTENANCE

1. Remove the Air Filter Cover and the Air Filter and check for dirt. Clean or replace as described below.
2. To prevent injury from dust and debris, wear ANSI-approved safety goggles, NIOSH-approved dust mask/respirator, and heavy-duty work gloves. Remove dust on the Filter surface by tapping a corner of the Filter against a hard surface. In a well-ventilated area away from bystanders, use pressurized air to blow dust out of the Filter from the inside.
3. Install the new or cleaned filter. Reinstall and secure the Air Filter Cover before use

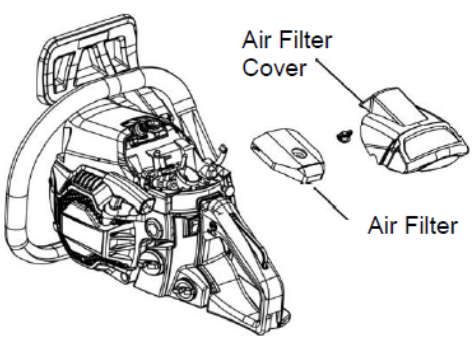

Figure 29: Air Filter Maintenance

FUEL FILTER MAINTENANCE

1. Clean the Fuel Tank Cap and the area around it.
2. Remove the Fuel Tank Cap from the Fuel Tank.
3. Use a suction pump (not included) to pump any fuel in the Tank into a proper gasoline container.
4. Use a piece of wire with a hook on one end to carefully extract the Fuel Filter from the Tank.
5. Remove the used filter from the fuel line. Attach a new filter to the fuel line and reinsert it into the Fuel Tank.
6. Replace Fuel Tank Cap and tighten securely

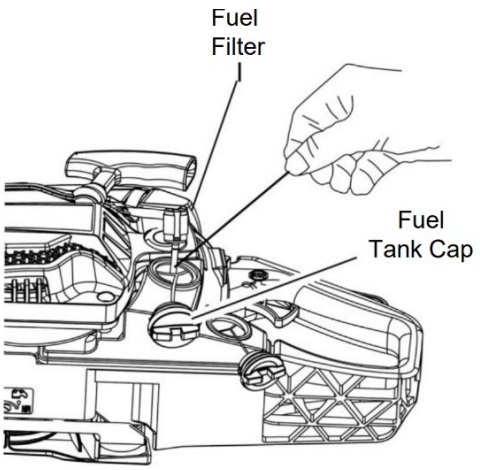

Figure 30: Fuel Filter Maintenance

LONG-TERM STORAGE

When the equipment is to remain idle for longer than 20 days, prepare the Engine for storage as follows:



1. CLEANING:

Wait for the engine to cool, then clean the engine with a dry cloth.

NOTE:

DO NOT CLEAN USING WATER.

The water will gradually enter the Engine and cause rust damage. Apply a thin coat of rust preventive oil to all metal parts.

⚠ WARNING!

TO PREVENT SERIOUS INJURY FROM FIRE:

Drain the Fuel Tank in a well-ventilated area away from ignition sources. If the Engine is hot from use, shut the Engine off and wait for it to cool before draining fuel. Do not smoke.

A. Remove the Fuel Tank Cap and drain any remaining fuel into an approved storage container.
B. Press the Prime Bulb 10 times.
C. Drain any residual fuel into the storage container.
D. Start the Engine and run at idle until the Engine stalls from lack of fuel.
E. Replace Fuel Tank Cap and tighten securely.

2. LUBRICATION:

A. Clean out the area around the spark plug. Remove the spark plug and pour 1/2 tablespoon of 2-stroke oil into the cylinder through the spark plug hole.

B. Replace the spark plug, but leave the spark plug cap disconnected.

C. Pull the starter handle to distribute oil in the cylinder. Stop after one or two revolutions when you feel the piston start the compression stroke (when you start to feel resistance).

D. Remove all residual bar and chain oil from the Oil Tank.

3. STORAGE AREA:

Cover and store in a dry, level, well-ventilated area out of reach of children. Storage area should also be away from ignition sources, such as water heaters, clothes dryers, and furnaces.

4. AFTER STORAGE:

Before starting the Engine after storage, follow the procedures in Pre-Start Checks on page
If using pre-mixed fuel that has been stored, keep in mind that during storage, some of the gasoline in the fuel evaporates while the 2-stroke oil does not, altering the gasoline-to-oil mix ratio. Running the Engine with an improper mixture WILL permanently damage the Engine. Use freshly mixed fuel when starting the Engine after storage.

7. TROUBLESHOOTING

Problem	Possible Causes	Probable Solutions
The engine will not start	**FUEL RELATED:** **1.** No fuel in tank. **2.** Choke not in START position, cold engine. **3.** Gasoline with more than 10% ethanol is used. (E15, E20, E85, etc.) **4.** Low quality or deteriorated, old gasoline/oil mixture. **5.** Carburetor not primed. **6.** Dirty fuel passageways. **7.** Carburetor is flooded.	**FUEL RELATED:** **1.** Fill fuel tank with fresh 87+ octane stabilizer-treated unleaded gasoline/oil mixture only. **Do not use gasoline with more than 10% ethanol (E15, E20, E85, etc.).** **2.** Move Choke to the START position. **3.** Clean out ethanol-rich gasoline from the fuel system. Replace components damaged by ethanol. Use fresh 87+ octane stabilizer-treated unleaded gasoline/oil mixture only. **Do not use gasoline with more than 10% ethanol (E15, E20, E85, etc.).** **4.** Use fresh 87+ octane stabilizer-treated unleaded gasoline/oil mixture. **Do not use gasoline with more than 10% ethanol (E15, E20, E85, etc.).** **5.** Press the Prime Bulb several times to prime. **6.** Clean out passageways using a fuel additive. Heavy deposits may require further cleaning. **7.** Turn Choke Knob to RUN position. Pull the starter handle 10-20 times to clear out the carburetor, then attempt to start with the normal process.
	IGNITION (SPARK) RELATED: **1.** Spark plug cap not connected securely. **2.** Spark plug electrode wet or dirty. **3.** Incorrect spark plug gap. **4.** Spark plug cap broken. **5.** Incorrect spark timing or faulty ignition system.	**IGNITION (SPARK) RELATED:** **1.** Connect the spark plug cap properly. **2.** Clean spark plug. **3.** Correct spark plug gap. **4.** Replace spark plug cap. **5.** Contact PRORUN Customer Service and have an approved technician diagnose/repair the ignition system.
	COMPRESSION RELATED: 1. Cylinder not lubricated. Problem after long storage periods. 2. Loose or broken spark plug. (Hissing noise will occur	COMPRESSION RELATED: 1. Pour 1/2 tablespoon of oil into the spark plug hole. Crank the engine a few times and try to start again. 2. Tighten the spark plug. If that does not work, replace the spark plug

Problem	Possible Causes	Probable Solutions
Engine misfires	**1.** Spark plug cap loose. **2.** Incorrect spark plug gap or damaged spark plug. **3.** Defective spark plug cap. **4.** Old or low-quality gasoline/oil mixture. **5.** Incorrect compression.	**1.** Check cap and wire connections. **2.** Re-gap or replace the spark plug. **3.** Replace spark plug cap. **4.** Use only fresh 87+ octane stabilizer-treated unleaded gasoline/oil mixture. **Do not use gasoline with more than 10% ethanol (E15, E20, E85, etc.).** **5.** Diagnose and repair compression. **(USE ENGINE WILL NOT START: COMPRESSION RELATED SECTION.)**
The engine stops suddenly	**1.** Fuel tank empty or full of impure or low-quality gasoline/oil mixture. **2.** Defective breather valve creating a vacuum, preventing proper fuel flow. **3.** Faulty magneto. **4.** Disconnected or improperly **5.** connected spark plug cap.	**1.** Fill fuel tank with fresh 87+ octane stabilizer-treated unleaded gasoline/oil mixture. **Do not use gasoline with more than 10% ethanol (E15, E20, E85, etc.).** **2.** Test/replace breather valve. **3.** Contact PRORUN Customer Service and have an approved technician service the magneto. **4.** Secure spark plug cap.
The engine stops when under heavy load	**1.** Dirty air filter **2.** Engine running cold.	**1.** Clean element. **2.** Allow the engine to warm up prior to operating the equipment.
Engine knocks	**1.** Old or low-quality gasoline/oil mixture. **2.** Engine overloaded. **3.** Incorrect spark timing, deposit buildup, worn engine, or other mechanical problems.	**1.** Fill fuel tank with fresh 87+ octane stabilizer-treated unleaded gasoline/oil mixture. **Do not use gasoline with more than 10% ethanol (E15, E20, E85, etc.).** **2.** Do not exceed the equipment's load rating. **3.** Contact PRORUN Customer Service and have an approved technician diagnose and service the engine.
After a sudden impact, the engine will run, but the equipment will not operate	The shaft key or other shear pin is broken by impact to disconnect the engine and limit damage.	Contact PRORUN Customer Service and have an approved technician check and replace the broken shaft key or other shear pins.

The engine runs, but the chain does not rotate.	**1.** Chain tension too tight. **2.** Guide Bar and/or Chain damaged. **3.** Chain drive sprocket worn. **4.** The chain brake is engaged.	**1.** Adjust Saw Chain tension. **2.** Inspect Guide Bar and Chain for damage. **3.** Replace Guide Bar and Chain if necessary. **4.** Contact PRORUN Customer Service and have an approved technician service tool. **5.** Disengage the chain brake.

Problem	Possible Causes	Probable Solutions
The engine runs, the chain rotates, but does not cut or cuts poorly.	1. Saw Chain not tensioned properly. 2. Saw Chain dull. 3. Saw Chain installed backwards.	1. Tension Saw Chain properly. 2. Sharpen Saw Chain or replace. 3. Reverse direction of Saw Chain section.)
The chain comes off Guide Bar.	1. Chain tension too loose. 2. Guide Bar and Chain not installed correctly.	1. Adjust Saw Chain tension. 2. Review and correct the Guide Bar and Chain installation.
Guide Bar and Chain running hot	1. Chain tension too tight. 2. Oil Tank is empty.	1. Adjust Saw Chain tension. 2. Check/refill Oil Tank.

Follow all safety precautions whenever diagnosing or servicing the equipment or engine. Contact PRORUN Customer Service.

8. EXPLODED VIEW AND PARTS

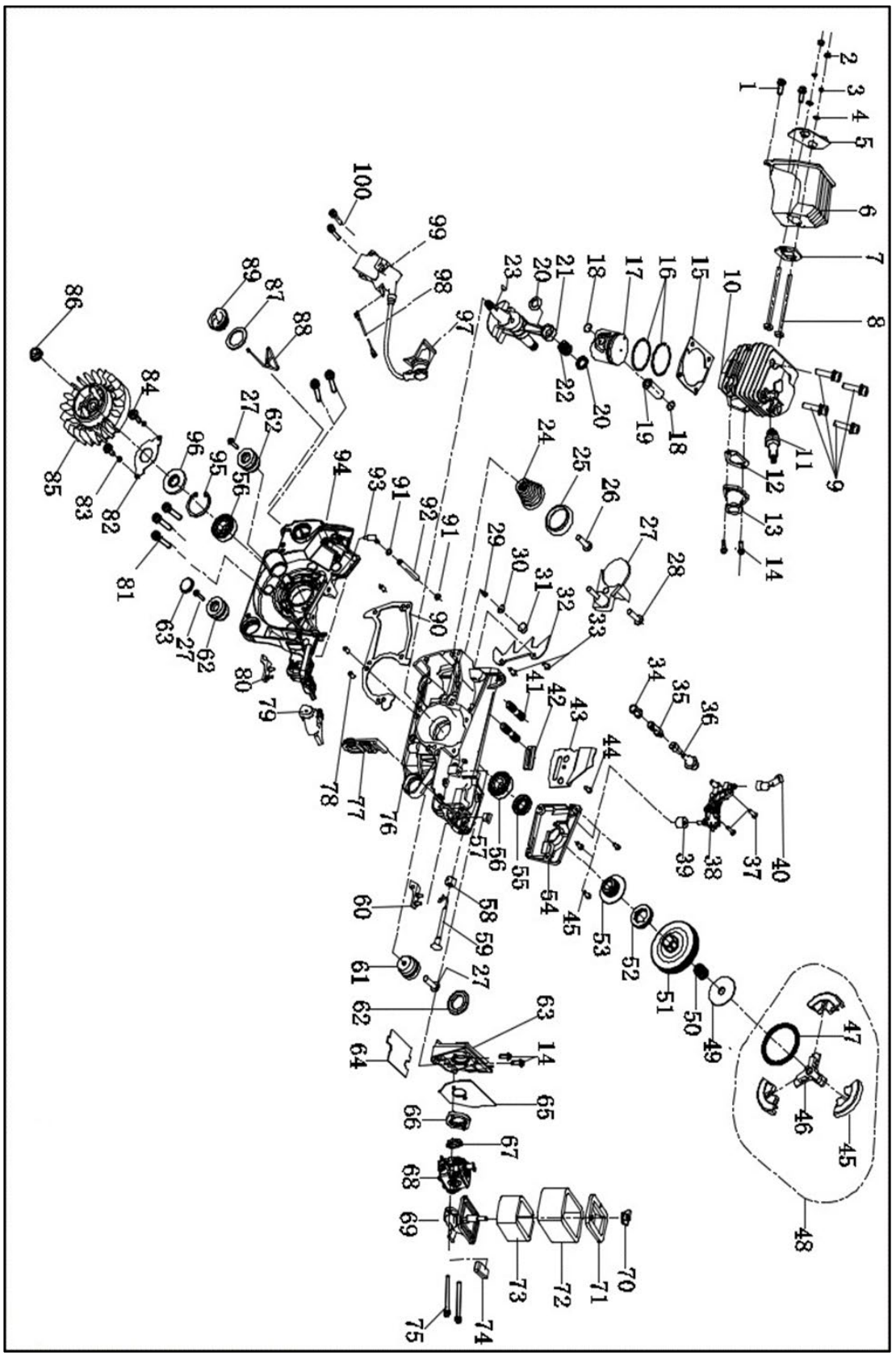

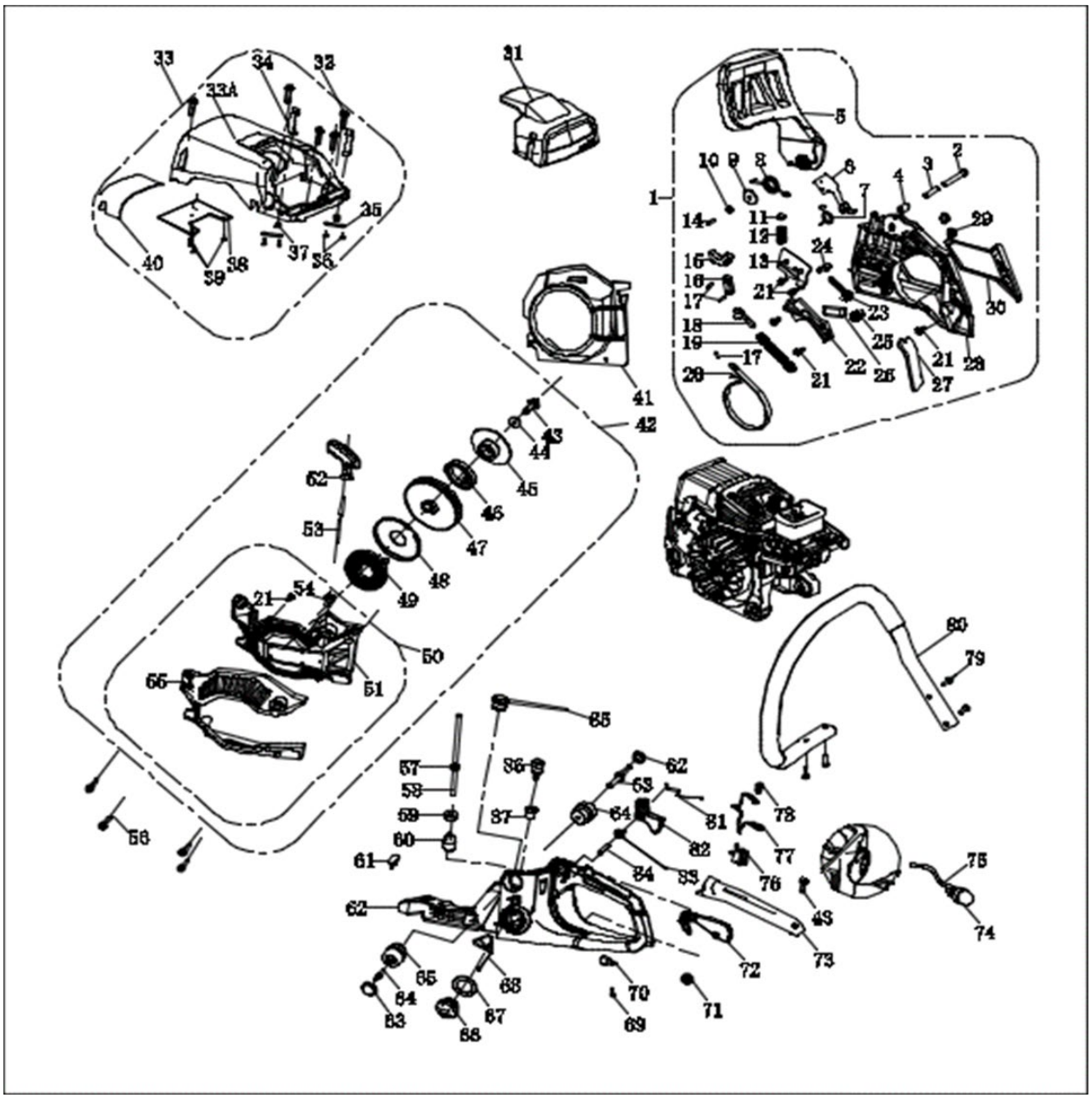
33
34
32
33A
31
5
10
9
8
6
4
3
2
1
7
14
11
12
29
24
15
13
16
21
17
23
30
18
19
25
17
22
26
21
28
20
21
27
35
40
39
38
37
36
41
42
43
44
45
62
46
53
47
48
49
21
54
50
51
55
80
79
65
57
58
59
60
61
56
36
37
62
63
64
81
78
82
77
84
83
76
75
62
43
74
73
72
65
64
63
68
67
66
70
69
71

Number	Description	SAP Number	Assembly SAP Number	Quantity
1	SCREW M5×14	20054549	20092123	2
2	NUT M5	20054558		2
3	WASHER 5	20054560		4
4	WASHER 5	20054561		4
5	SILENCER COVER PLATE(WITH MUFFLER)	20057408		1
6	SILENCER BODY			1
7	SILENCER SEALING PLATE	20050759		1
8	MUFFLER CONNECTING SCREW	20054646		2
9	SCREW M5 X 20	20054552		4
10	CYLINDER BODY	20080644		1
11	SPARK PLUG	20050466		1
12	AIR INTAKE TUBE SEALING PLATE	20050755	20092117	1
13	AIR INTAKE TUBE	20054654		1
14	SCREW M5×12	20054546		4
67	HOLD COIL	20054638		1
15	CYLINDER SEALING PLATE	20050757		1
16	PISTON RING	20053275		2
17	PISTION	20053278		1
18	PISTON PIN CIRCLIP	20053277		2
19	PISTON PIN	20053276		1
20	NEEDLE BEARING RING	20054667		2
21	CRANKSHAFT CONNECTING BAR COMPONENTS	20071728		1
22	NEEDLE BEARING 11 X 15 X 12.5	20054669		1
23	SEMICIRCULAR KEY 3 X 3.7 X 10	20054650		1
24	CONICAL SPREADER SPRING	20054609		1
25	CONICAL SPREADER BASE	20054608		1
26	TAPPING SCREW ST 5 X 16	20054544		4
27	CHAIN CATCHER	20054628		1
28	SCREW M5 X 16	20054541		1
29	AERATION JET	20054664		1
30	AERATION JET CIRCLIP	20054665		1
31	SPONGE TRANSITION BLOCK	20054644		1

32	BUMPER SPIKES	20054642	68821807	1
33	SCREW M5×10	20060973		2
34	OIL FILTER SCREEN	20054698	68821808	1
35	OIL FILTER	20054697		1
36	OIL TUBE	20054694		1
37	SCREW M4 X 14	20054538		2
38	OIL PUMP	20054696		1
39	SPONGE TRANSITION COIL	20054645		1
40	NOZZLE	20054695		1
41	DOUBLE-SCREW BOLT AM8-M8 X 26-8.8	20054554		2
42	CHAIN GUIDE BLOCK	20054637		1
43	DAMPER	20054639		1
44	SCREW M4×10	20054537		4
45	SHOE BLOCK		20057397	1
46	RETAINER			1
47	CLUTCH EXTENSION SPRING			1
49	CLUTCH ADJUSTING WASHER	20054640	68821801	1
50	NEEDLE BEARING 12×15×14.5	20054662		1
51	CLUTCH SHELL	20054649		1
52	SPROCKET	20054648		1
53	TURBINE	20054657		1
54	COVER PLATE	20054636		1
55	OIL SEAL 15 X 28 X 4.5	20054661		1
56	BEARING 6202 GRADE D 15 X 35 X 11	20054571		2
57	SHOCK BLOCK 1	20054632		1
58	THROTTLE LEVER RETAINING BRACKET	20054631		1
59	THROTTLE ROD	20055229		1
60	RIGHT SHOCK BLOCK	20054634		1
61	CUSHION SOCKET	20054658		3
62	DUST COVER	20054607		3
63	AIR INTAKE SUPPORT	20054655		1
64	BACKING BOARD	20050765		1
65	SEALING PLATE OF AIR INTAKE SUPPORT	20050762		1
66	AIR INTAKE FLANGE	20054635		1
67	HOLD COIL	20054638	8821806	1
68	CARBURETOR W/ OIL BUBBLE STRUCTURE	20055222		1
69	AIR INTAKE SOCKET	20057733	68821809	1
71	AIR FILTER COVER			1

72	AIR FILTER			1
70	AIR FILTER LOCK NUT	20057081		1
73	AIR ss FOAM	20057736		1
74	CUSHION OF AIR INTAKE SOCKET	20054629		1
75	NUT M5 X 50	20061160		2
76	RIGHT CASE BODY	20053264		1
77	DUST PLATE	20054630		1
78	PIN 5×10	20054566		3
79	IDLE ADJUSTING GUIDE SET	20055419		1
80	LEFT SHOCK BLOCK	20054633		1
81	SCREW M5 X 25	20054553		5
82	OIL SEAL DAMPER	20054641		1
83	WASHER 4	20054563		2
84	SCREW M4 X 8	20054539		2
85	FLYWHEEL	20050856		1
86	NUT M8 X 1	20054557		1
87	PACKING WASHING 20×30×2	20055286	20074399	2
88	ANTI-DROP PLATE	20054582		2
89	OIL COVER	20055251		2
90	CASE BODY SEALING PLATE	20050766		1
91	CIRCLIP	20054663		2
92	SUCTION TUBE 2.5 X 7 X 105	20055779		1
93	SUCTION JET	20054666		1
94	LEFT CASE BODY	20053237		1
95	RING 35	20054564		1
96	OIL SEAL 15 X 35 X 4.5	20054660		1
97	IGNITER CAP	20050803	68821803	1
98	EXTINCTION CONDUCTOR	20050785		1
99	IGNITER	20050857		1
100	SCREW M5×20	20054550		1
2	SCREW M5 X 40	20083000	68821802	1
3	PIN GLAND 5×6.3×30			1
4	HEAVY BROCK GLAND 6.3 X 9 X 15			1
5	FRONT DAMPER			1
6	HEAVY BROCK			1
7	HEAVY BROCK SPRING			1
8	BRAKE TORSION ROD SPRING			1
9	WASHER 5.2 X 20 X 1.2			1
10	LOCK- NUT M5			1
11	SPRING BASE			1
12	FRONT GUARD SPRING			1

13	TENSIONER COVER PLATE			1
14	PIN 3 X 14			1
15	MAIN LEVEL			1
16	SECONDARY PULL-ROD			1
17	PIN 3 X 9			1
18	BREAK CONTROL ROD			1
19	BRAKE SPRING			1
20	BREAK STRAP			1
21	TAPPING SCREW ST4.2 X 9.5			1
22	BREAK SPRING COVER PLATE			1
23	TIGHTENER SCREW			1
24	TENSION BLOCK			1
25	TENSION GEAR			1
26	CHAIN GUIDE BLOCK			1
27	DUST SHIELD			1
28	CLUTCH COVER			1
29	NUT M8	20054556		2
31	AIR FILTER COVER	20066268		1
32	SCREW M5×16	20054541	20092126	5
33A	UPPER COVER	20066271		1
34	CLIP	20057352		2
35	CARDS AND PRESSURE PLATES	20055473		2
36	SCREW ST2.9×6.5	20051771		4
37	CLIP FIXING PLATE	20057353		2
38	TOP COVER AIR GUIDE SHEET	20050828		1
39	SCREW ST3.5×6	20051733		3
40	ALUMINUM SEPTUM FOR CYLINDER SHIELD (OU V. USE)	20055472		1
41	FLOW GUIDING COVER	20057541		1
43	SCREW ST4.8X14		20085786	4
44	PLATE WASHER 5			4
45	EASY START- COIL SPRING COVER			1
46	EASY-START COIL SPRING			1
47	START PLATE			1
48	EASILY ACTUATED COIL SPRING COVER			1
49	START COIL SPRING			1
51	START HOUSING			1
52	STARTER HANDLE			1
53	STARTER ROPE			1
54	EYELET			1

55	ACTUATER COVER LINER			1
52	STARTER HANDLE	20057781	68821805	1
53	STARTER ROPE	20054676		1
51	START HOUSING	20073551	68821804	1
54	EYELET	20054579		1
55	ACTUATOR COVER LINER	20057545		1
21	TAPPING SCREW ST4x10	20054543		1
56	SCREW M5 X 18	20061024		4
57	FUEL PIPE SEAT	20055389		1
58	FUEL TUBE	20055334	20092108	1
59	FUEL FILTER CLUMP WEIGHT	20055136		1
60	FUEL FILTER	20053111		1
61	SHOCK RUBBER	20054677		1
62	BASE	20073554		1
63	DUST COVER	20054612		2
64	REAR HANDLE FIXING SCREW	20054627		2
65	SHOCK RUBBER GLAND	20054684		1
66	OIL COVER	20056752	20076904	2
67	PACKING WASHING 23×34×1.7	20056768		2
68	ANTI-DROP PLATE	20054582		2
81	THROTTLE ROD	20055469	20092115	1
82	THROTTLE TRIGGER	20054679		1
83	THROTTLE TRIGGER SPRING	20054680		1
84	PIN 6×24	20054570		1
69	SCREW ST4×5	20051789		1
70	FIXED LEAF	20055470		1
71	SLEEVE SPRING	20050731		1
72	THROTTLE TRIGGER LOCK-OUT	20054681		1
73	REAR HANDLE COVER	20057553		1
74	PRIMER BULB (WITH OIL BUBBLE STRUCTURE)	20054581	20092127	1
75	PUMP TUBE （ 2.5X5X155） (WITH OIL BUBBLE STRUCTURE)	20054576		1
76	SWITCH (NO OIL BUBBLE CONSTRUCTION)	20050786		1
77	GROUND LEAD	20050679		1
79	SCREW ST5×16	20054544	20092125	4

80	FRONT HANDLE	20050122		1
85	OIL NOZZLE	20054683		1
86	BALANCER	20054685		1
87	BALANCER SEAT	20054580		1
91	18IN SAW CHAIN	30001581		1
90	18IN GUIDE BAR	30001426		1
92	18IN GUIDE BAR COVER	30001170		1

9. WARRANTIES

EMISSIONS CONTROL SYSTEM WARRANTY

Zhejiang Zhongjian Technology Co., Ltd., CALIFORNIA AND FEDERAL EMISSION CONTROL WARRANTY STATEMENT YOUR WARRANTY RIGHTS AND OBLIGATIONS

The U.S. Environmental Protection Agency (EPA), the California Air Resources Board (CARB), and Zhejiang Zhongjian Technology Co., Ltd (hereinafter called Zhongjian), are pleased to explain the Emissions Control System Warranty on your new 2020/2021 small off-road engine. In California, new equipment that uses small off-road engines must be designed, built, and equipped to meet the state's stringent anti-smog standards. In other states, new small off-road engine must be designed, built and equipped at the time of sale to meet the U.S. EPA regulations for small off-road engines. The small off-road engine must be free from defects in materials and workmanship which cause it to fail to conform with U.S. EPA standards for the first two years of engine use from the date of sale to the ultimate purchaser. Zhongjian, must warrant the emission control system on your small off-road engine for the period of time listed above provided there has been no abuse, neglect, or improper maintenance of your small off-road engine.

Your emission control system may include parts such as the carburetor or fuel injection system, the ignition system, catalytic converters, fuel tanks, valves, filters, clamps, connectors, fuel lines, fuel caps, canisters, vapor hoses, and other associated components. Also included may be hoses, belts and connectors, and other emission-related assemblies.

MANUFACTURER'S WARRANTY COVERAGE

This 1995 and later small off-road emissions control system is warranted for two years. If any emission-related part on your engine is defective, the part will be repaired or replaced by Zhongjian.

OWNER'S WARRANTY RESPONSIBILITIES

A. As the small off-road engine owner, you are responsible for the performance of the required
B. maintenance listed in your operator's manual. Zhongjian, recommends that you retain all receipts
C. covering maintenance on your small off-road engine, but Zhongjian, cannot deny warranty solely for the lack of receipts or for your failure to ensure the performance of all scheduled maintenance.
D. As the small off-road engine owner, you should be aware, however, that Zhongjian, may deny you warranty coverage if small off-road engine or a part has failed due to abuse, neglect, improper maintenance, or unapproved modifications.
E. You are responsible for presenting your small off-road engine to a service center as soon as a problem exists. The warranty repairs should be completed in a reasonable amount of time, not to exceed 30 days.

If you have any questions regarding your warranty rights and responsibilities, you should contact a Zhongjian, Customer Representative at [Phone Number] or [website determined by brand].

DEFECT WARRANTY COVERAGE REQUIREMENTS:

A. The warranty period begins on the date the engine or equipment is delivered to the purchaser.

B. General Emissions Warranty Coverage. Zhongjian, warrants to the ultimate purchaser and each subsequent purchaser that your small off-road engine is designed, built, and equipped at the time of sale to conform with all applicable regulations adopted by the California Air Resources Board or the United States Environmental Protection Agency; and that it is free from defects in materials and workmanship which cause the engine to fail to conform with applicable regulations for a period of two years from the date the small off-road engine is purchased by the initial purchaser. Any replacement part or service that is equivalent in performance and durability may be used in non-warranty maintenance or repairs and shall not reduce the warranty obligations of Zhongjian. The warranty on emissions-related parts will be interpreted as follows: Any warranted part that is not scheduled for replacement as required in the Maintenance Schedule is warranted for two

C. years. If any such part (including any part that is scheduled only for regular inspection) fails during the period of warranty coverage, it will be repaired or replaced at any [BRAND] ® Authorized Service Center at no charge. Any such part repaired or replaced under warranty will be warranted for the remaining warranty period. A statement to the effect of “repair or replace as necessary” would not reduce the period of warranty coverage. Any warranted part that is scheduled for replacement as required maintenance in the Maintenance Schedule is warranted for the period of time prior to the first scheduled replacement point for that part. Any such part repaired or replaced under warranty is warranted for the remainder of the period prior to the first scheduled replacement point, and will be repaired or replaced at any [BRAND]® Authorized Service Center for no charge until that replacement point is reached.

Zhongjing shall remedy warranty defects at any authorized [BRAND] ® Authorized Service Center, including any distribution center that may be franchised to service the subject engines. Any diagnostic work done at a [BRAND] ® Authorized Service Center shall be free of charge to the owner if such work determines that a warranted part is defective. Any manufacturer-approved or equivalent replacement part may be used for any warranty maintenance or repairs on emission-related parts, and must be provided free of charge to the owner if the part is still under warranty. Zhongjian is liable for damages to other engine components caused by the failure of a warranted part still under warranty.

Add-on or modified parts that are not exempted by the California Air Resources Board may not be used. The use of any non-exempted add-on or modified parts will be grounds for disallowing a warranty claim. Zhongjian will not be liable for warranty failures of warranted parts caused by the use of a non-exempted add-on or modified part.

The Emission Parts List specifically defines the emission-related warranted parts. Zhongjian, will provide any documents that describe its warranty procedures or policies within five days upon request by the California Air Resources Board

EMISSIONS PARTS LIST (IF EQUIPPED)

Exhaust Emissions

Fuel Metering System	Carburetor and internal parts (and/or pressure regulator or fuel injection system)
	Air/fuel ratio feedback and control system
	Cold start enrichment system
Air Induction System	Controlled hot air intake system
	Intake manifold
	Air filter
Ignition System	Spark Plugs
	Magneto or electronic ignition system
	Spark advance/retard system
Exhaust Gas Recirculation (EGR) System	EGR valve body, and carburetor spacer if applicable
	EGR rate feedback and control system
Air Injection System	Air pump or pulse valve
	Valves affecting the distribution of flow
	Distribution manifold
Catalyst or Thermal Reactor System	Catalytic converter
	Thermal reactor
	Exhaust manifold
Particulate Controls	Traps, filters, precipitators, and any other device used to capture particulate emissions
Miscellaneous items used in the above systems	Vacuum, temperature, and time-sensitive valves and switches
	Electronic controls
	Hoses, belts, connectors, and assemblies

PRORUN regularly improves our products, and you may find slight differences between your product and the descriptions contained within this operator's manual. Modifications can be made to the product without notice and without the obligation to update the manual, provided that the essential safety and functional characteristics remain unaltered. Contact PRORUN Customer Service with any questions and for current specifications.

PRORUN / TOPSUN USA
10130 Perimeter Parkway
Suite 140
Charlotte, NC 28216
Customer Service: (844) 905-0882 Email: info@proruntech.com Website: www.proruntools.com

Zhejiang Zhongjian Technology Co., Ltd Web: www.topsunpower.cc
E-mail: sales@topsunpower.cc
ADD: No.155 Mingyuan North AVE, Economic Development Zone, Yongkang, Zhejiang, 321300, P.R. CHINA
Made in China