Smart Wall Heater

Instruction Manual

AH-JRQ1BG1

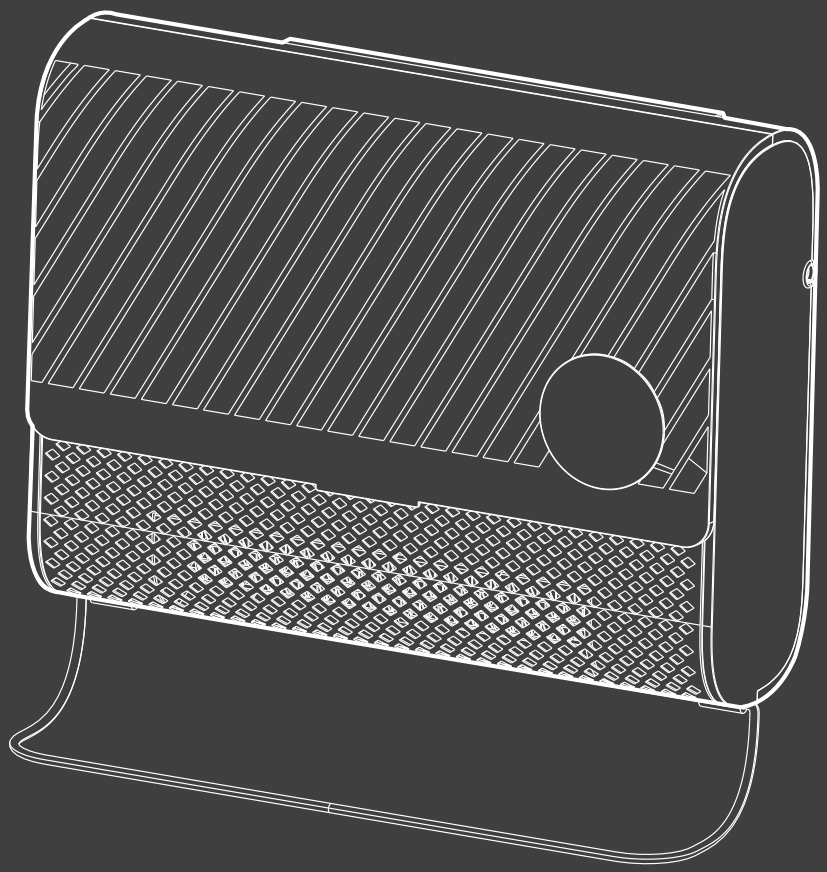

HJ-Customer-Service@outlook.com

(909)637-7665 | (909)637-7593

EST 9:00AM--17:00PM

SAFETY PRECAUTIONS

- To ensure safe use and avoid injury and property loss to you or others, please be sure to follow the safety precautions below. Improper use or failure to observe these warnings may result in serious accidents.
- This product is not intended for use by unattended young children or individuals with disabilities, nor should it be used as a toy. Such misuse may lead to accidents.

【WARNING】
Indicates a hazardous situation that, if not avoided, could result in death or serious injury.

【NOTICE】
Indicates other important safety information.

【CAUTION】
Indicates a hazardous situation that may result in minor injury or property damage.

【WARNING】

- The power supply for this unit is 120V~. Please ensure that the power socket has a rated current of at least 15A. If it does not meet this requirement, the socket must be replaced before use.
- Before use, check the power cord and plug for damage. If the power cord is damaged, it must be replaced by the manufacturer, its service agent, or similarly qualified personnel to avoid potential hazards.
- Do not use the heater near flammable or explosive materials, heat-sensitive items (such as those that may deform, discolor, or deteriorate), or in areas with heavy dust.
- Do not use the heater in areas where there are hanging objects that may fall. During use, place the unit on a stable, level surface, and do not tip or tilt it.
- Do not insert metal wires or any foreign objects into the openings of the unit to avoid the risk of electric shock.
- Do not place the power cord near the air outlet.
- The product must not be used as insulation or heating equipment for animals or plants.
- Do not use plugging or unplugging the power cord as a substitute for the power switch to turn the unit on or off.
- To avoid overheating, do not cover the heater.
- Do not immerse the product in water. Do not use the heater near bathtubs, showers, or swimming pools.
- Do not rinse the unit directly with water. Use a soft cloth lightly dampened with neutral detergent to gently clean the surface, then wipe it dry. Do not use solvents such as gasoline.
- If the product malfunctions, turn it off immediately and unplug the power cord. Please contact our after-sales service for assistance. Unauthorized personnel are strictly prohibited from repairing or modifying the unit.

- Do not plug the heater into the same outlet as other high-power electrical appliances. Never move the unit by pulling the power cord.
- This appliance contains hot, arcing, or sparking components. Do not use in areas where gasoline, paint, orflammable/explosive liquids are used or stored. Keep the unit away from heated surfaces and open flames.
- To prevent hazards caused by false resetting of the thermal cut-out, the appliance must not be powered through an external switching device, such as a timer, nor connected to a circuit that is regularly switched on and off by a common control device.
- Do not direct the heater toward a power outlet, and do not place it directly beneath one.

⚠【CAUTION】

- Before use, please check whether the voltage used is the same as the voltage marked on the product.
- To prevent fire hazards caused by covering or improper placement, the heater must not be used with a timer, programmable timer, or any other device that automatically switches the power on.
- Before cleaning this product, be sure to turn off the power switch and unplug it, and wait until it is completely cooled before cleaning.
- Children, the elderly who are unable to care for themselves, and patients should use the product only under adult supervision to prevent accidents.
- Whether in use or not, keep the product at least 60 inches away from open flames and avoid direct sunlight.
- When the product is in use, the power cord should be routed behind the unit. Placing it in front may cause it to overheat, become damaged, or even result in a safety hazard.
- To avoid burns, do not allow bare skin to come into direct contact with the air outlet during use.

【NOTICE】

- This product is only suitable for indoor use and not for outdoor use.
- After cleaning or maintenance, make sure the unit is completely dry before powering it on or storing it.
- Please unplug the power cord when not in use for a long time. It is recommended to pack it in the original packaging and store it in a dry place.
- Avoid impacts or scratches to prevent damage to the surface coating and potential rusting.

Installation Safety Tips

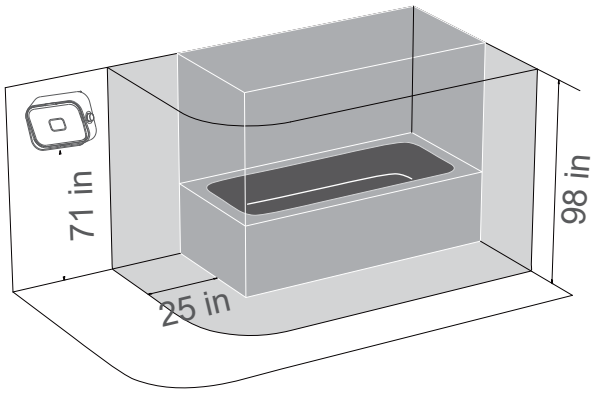

Installation Clearance from Bathtub

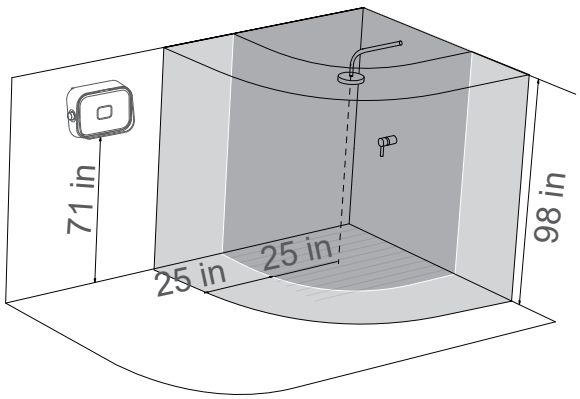

Installation Clearance from Shower

Other Precautions During Use

- If the product suddenly powers off and becomes unusable, unplug the power cord and allow the unit to stand and cool down before plugging it in again to resume normal operation. If the unit still does not operate properly, immediately turn it off, unplug the power cord, and contact our after-sales service for assitance. Unauthorized personnel are strictly prohibited from repairing or modifying the unit.
- The cold air setting is used solely to cool the heating element.
- Always plug the heater directly into a wall outiet. Do not use with extension cords or relocatable power taps(such as power strips)

PLEASE SAVE THESE INSTRUCTIONS AND READ THIS MANUAL CAREFULLY BEFORE USE.

Product Introduction

Product Diagram

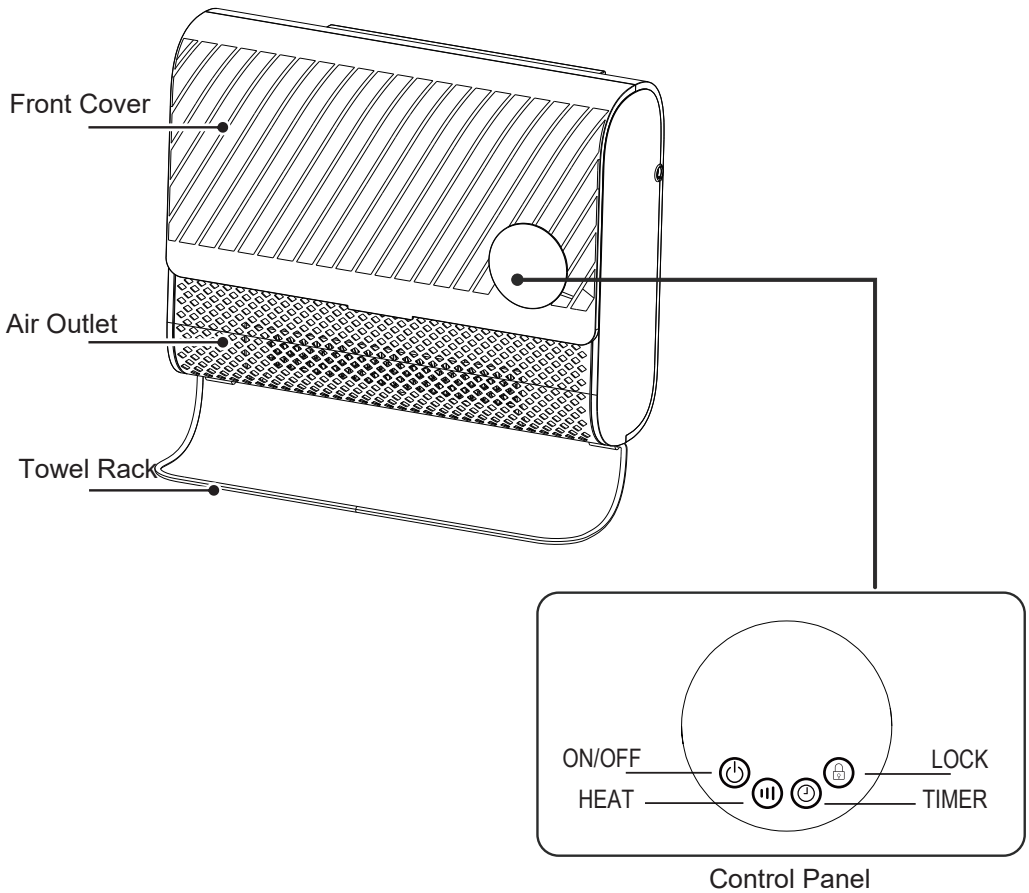

Control Panel

Parts List

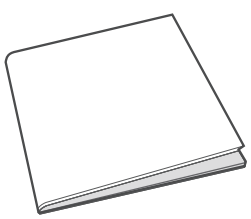

Instruction Manual x 1



Remote control x 1

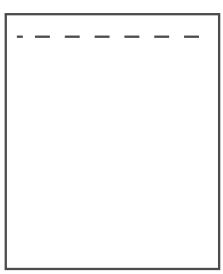

Screw bag x 1

Product Installation

Screw-free installation

Align the two protruding hooks on the hanging rod with the two small square holes on the back of the heater, then push upward to secure.

Then hang the rod onto the towel bar for use.

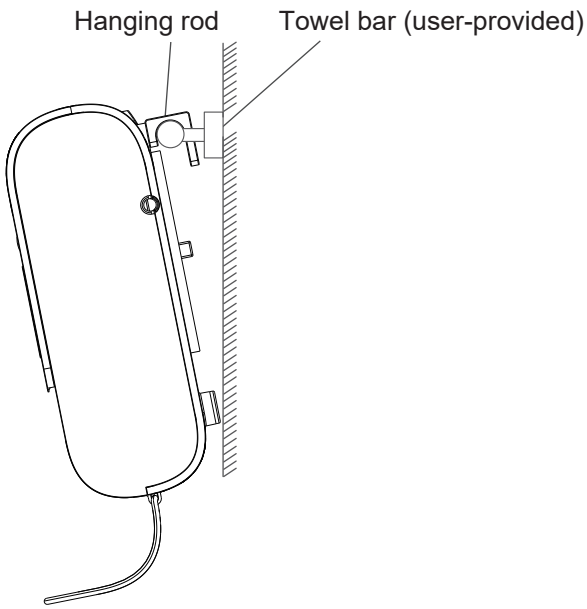

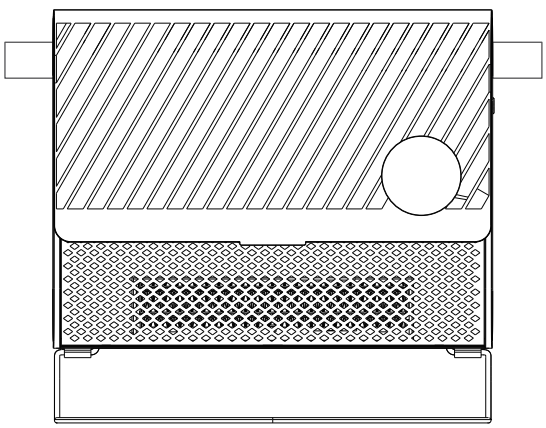

Screw installation

Drill two holes in the wall with a horizontal distance of 6 inches. Insert the wall plugs into the holes, then drive the screws into the wall plugs. Align the two holes on the hanging rod at the back of the heater with the screws on the wall, then push the heater until the holes fully engage with the screws.

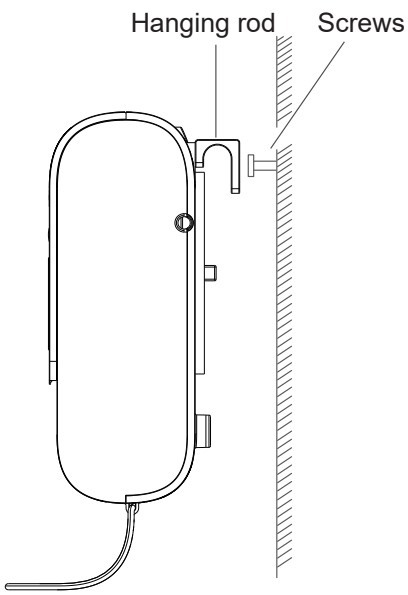

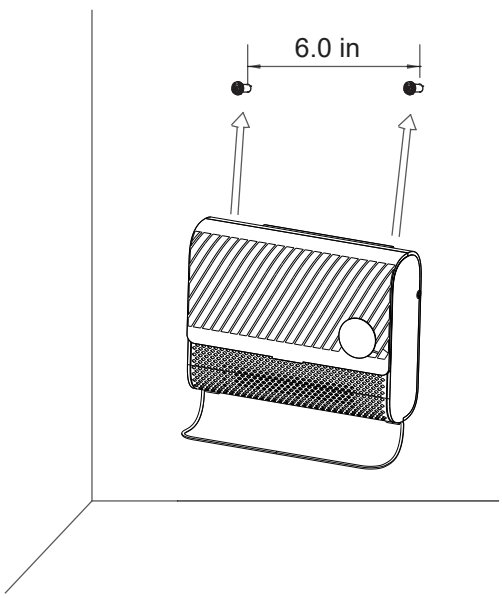

NOTE:

1. The hanging holes on the wall must be level with each other and securely installed.
2. The wall-mounted heater should be installed at least 20 inches away from side walls and other objects. Ensure there are no obstructions within 25 inches above and below the unit to facilitate air convection.
3. The installation height of the product should be at least 71 inches.
4. When installed near bathrooms or swimming pools, ensure the product cannot slide into bathtubs, shower areas, or swimming pools.
5. The installation location should be as far as possible from bathtubs, shower areas, and swimming pools.Switches and other controls should be out of reach of people in bathtubs or shower areas.

How to use

1 Pre-startup inspection

- Check if the power cord is intact.
- The product operates on a 120V~ power supply. Before use, confirm that the power socket's rated current meets requirements and that it has proper grounding; otherwise, replace the socket.

2 ON/OFF

- Plug in the power cord. Press the power button to turn on the heater. The default setting is L0. Press the power button again to turn off the heater. The fan will continue running for 30 seconds before stopping.

3 Heating Level

- Press the heat setting button to cycle through three settings: Low heat (L0), High heat (H1), and Cold air (H0).

4 TIMER

- Press the timer button to set the heater timer from 1 to 12 hours.

5 LOCK

- Press and hold the child lock key for 3 seconds to lock/unlock the heater control panel.

6 Security Protection

- Overheat protection: If the internal temperature becomes too high due to abnormal conditions or improper use, the temperature control system will automatically cut off power to stop the heater. Please unplug the unit. After the unit has cooled down and the abnormal condition has been resolved, reconnect the power to resume normal operation.

Replace Battery in the Remote Control

1

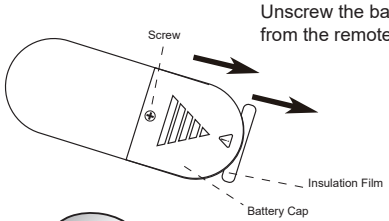

Unscrew the battery cover from the remote control.

2

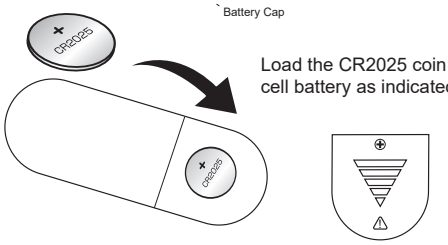

Load the CR2025 coin cell battery as indicated.

3

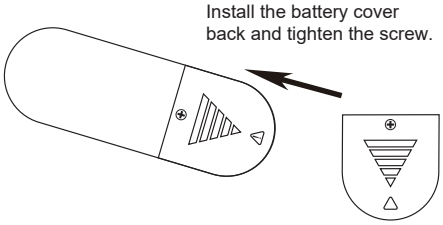

Install the battery cover back and tighten the screw.

⚠ WARNING

- **INGESTION HAZARD:** This product contains a button cell or coin battery.
- **DEATH** or serious injury can occur if ingested.
- A swallowed button cell or coin battery can cause **Internal Chemical Burns** in as little as **2 hours.**
- **KEEP** new and used batteries **OUT OF REACH of CHILDREN**
- **Seek immediate medical attention** if a battery is suspected to be swallowed or inserted inside any part of the body.



Battery type CR2025; DC 3V. (Included)

Attention

I. Do not charge this battery.

II. Please keep the remote control out of reach of children; If swallowed, please seek medical attention immediately.

III. When using the remote control to operate the fan, you need to point the remote control at the fan display screen. Because the remote control frequency will overlap. To avoid misoperation, please stay away from other electrical appliances when using the remote control.

IV. Shutting down the unit using the power button or the remote control does not fully disconnect the fan from the power supply.

V. If not used for a long time, please unplug the power plug; if the remote control is not used for a long time, please remove the battery.

Usage scenario description

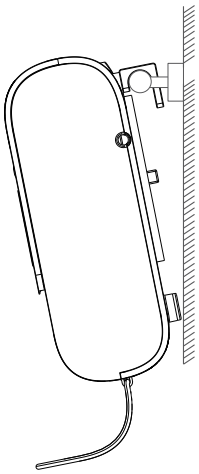

Wall-mounted use
(recommended usage example)

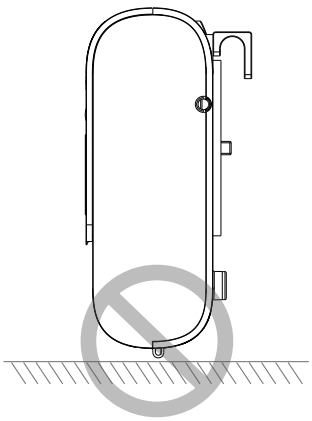

Do not place or use on the floor
(Including but not limited to illustrations, such use may bring security risks.)

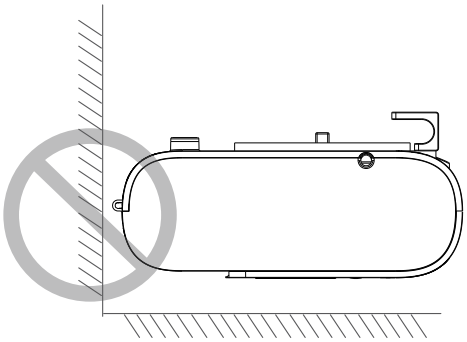

Do not use against a wall

Cleaning and Maintenance

- Before cleaning this product, you must disconnect the power supply and wait until the product cools down.
- After cleaning or maintenance, make sure the unit is completely dry before powering it on or storing it.
- Please unplug the power cord when not in use for a long time. It is recommended to pack it in the original packaging and store it in a dry place.
- Do not rinse the unit directly with water. Use a soft cloth lightly dampened with neutral detergent to gently clean the surface, then wipe it dry. Do not use solvents such as gasoline.
- Avoid impacts or scratches to prevent damage to the surface coating and potential rusting.

Service Guide

Product Parameters

Product Name	Model NO.	Selectable power (W) and working mode			Rated Voltage	Power socket load current (A)
		OFF	LOW HEAT	HIGH HEAT		
Smart Wall Heater	AH-JRQ1BG1	0	750	1500	120V~	15A

Note: The power supply is 120V~/60Hz AC.

The performance parameters listed in the table are measured under factory conditions and are for reference only.

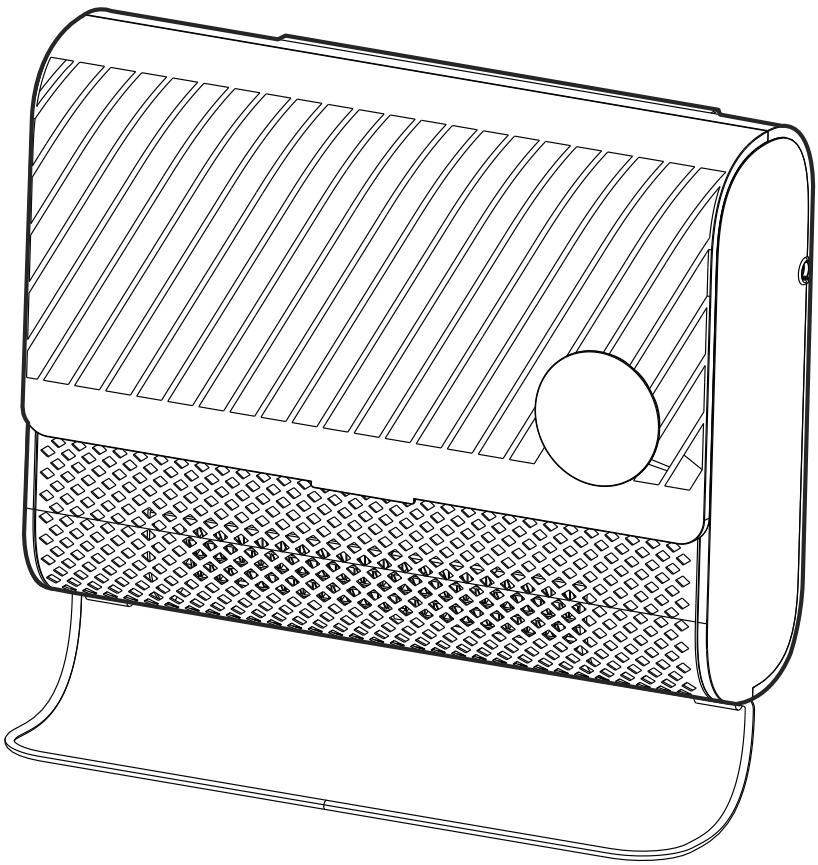

Technical Support

(909)637-7665 | (909)637-7593

Other Info

HJ-Customer-Service@outlook.com

Thank you for choosing this product. We strive to provide you with the best quality products and services in the industry. Should you have any issues, please don't hesitate to contact us.