Use and Care Guide

Liquid Propane Gas Grill

Kenmore Model No. 415.16537900

This Grill is for Outdoor Use Only

- Read and follow all Safety, Assembly, and Use and Care Instructions in this Guide before assembling and cooking with this grill.
- Failure to follow all instructions in this Use and Care Guide may lead to fire or explosion, which could result in property damage, personal injury or death.

- Safety
- Parts
- Use and Care
- Assembly

Assembly Questions?
Call 1-800-241-7548

Tools needed for assembly:
Adjustable wrench (not provided)
Screwdriver (not provided)
7/16" Combination wrench (not provided)

SAVE THESE INSTRUCTIONS!

Sears, Roebuck and Co., Hoffman Estates, IL 60179 U.S.A.

©2008 Sears, Roebuck and Co., All Rights Reserved

Printed in China

464324009 • 80018088 • 10-15-08

DANGER

If you smell gas:

1. **Shut off gas to the appliance.**
2. **Extinguish any open flame.**
3. **Open lid.**
4. **If odor continues, keep away from the appliance and immediately call your gas supplier or your fire department.**

WARNING

1. **Do not store or use gasoline or other flammable liquids or vapors in the vicinity of this or any other appliance.**
2. **An LP Tank not connected for use shall not be stored in the vicinity of this or any other appliance.**

Call Grill Service Center For Help And Parts

If you have questions or need assistance during assembly, please call **1-800-241-7548**. You will be speaking to a representative of the grill manufacturer and not a Sears employee. To order new parts call Sears at **1-800-4-MY-HOME®**.

Product Record

IMPORTANT: Fill out the product record information below.

Model Number _____

Serial Number _____
See rating label on grill for serial number.

Date Purchased _____

To Installer/Assembler: Leave these instructions with consumer.

To Consumer: Keep this manual for future reference.

CAUTION

- **Some parts may contain sharp edges, especially as noted in these instructions. Wear protective gloves if necessary.**

CAUTION

For residential use only. Do not use for commercial cooking.

WARNING

CALIFORNIA PROPOSITION 65

1. Combustion by-products produced when using this product contain chemicals known to the State of California to cause cancer, birth defects, and other reproductive harm.

2. This product contains chemicals, including lead and lead compounds, known to the State of California to cause cancer, birth defects or other reproductive harm.

Wash your hands after handling this product.

Installation Safety Precautions

- Use grill, as purchased, only with LP (propane) gas and the regulator/valve assembly supplied. A conversion kit must be purchased for use with natural gas.
- Grill installation must conform with local codes, or in their absence of local codes, with either the *National Fuel Gas Code, ANSI Z223.1/ NFPA 54, Natural Gas and Propane Installation Code, CSA B149.1, or Propane Storage and Handling Code, B149.2, or the Standard for Recreational Vehicles, ANSI A 119.2/NFPA 1192, and CSA Z240 RV Series, Recreational Vehicle Code, as applicable.*
- All electrical accessories (such as rotisserie) must be electrically grounded in accordance with local codes, or *National Electrical Code, ANSI / NFPA 70 or Canadian Electrical Code, CSA C22.1.* Keep any electrical cords and/or fuel supply hoses away from any hot surfaces.
- This grill is safety certified for use in the United States and/or Canada only. Do not modify for use in any other location. Modification will result in a safety hazard.

Safety Symbols

The symbols and boxes shown below explain what each heading means. Read and follow all of the messages found throughout the manual.

DANGER

DANGER: Indicates an imminently hazardous situation which, if not avoided, will result in death or serious injury.

WARNING

WARNING: Indicates an potentially hazardous situation which, if not avoided, could result in death or serious injury.

CAUTION

CAUTION: Indicates a potentially hazardous situation or unsafe practice which, if not avoided, may result in minor or moderate injury.

TABLE OF CONTENTS

For Your Safety 2
Grill Service Center 2
Product Record Information 2
Safety Symbols 2
Installation Safety Precautions 2
Kenmore Grill Warranty 3
Use and Care 4-10
Parts List 11
Parts Diagram 12
Assembly 13-22
Troubleshooting 23-25

Repair Protection Agreements

Congratulations on making a smart purchase. Your new Kenmore® product is designed and manufactured for years of dependable operation. But like all products, it may require repair from time to time. That's when having a Repair Protection Agreement can save you money and aggravation.

Purchase a Repair Protection Agreement now and protect yourself from unexpected hassle and expense.

Here's what the Repair Protection Agreement* includes:

- ☑ **Expert service** by our 10,000 professional repair specialists
- ☑ **Unlimited service and no charge** for parts and labor on all covered repairs
- ☑ **Product replacement** up to $1500 if your covered product can't be fixed
- ☑ **Discount of 10%** from regular price of service and related installed parts not covered by the agreement; also, 10% off regular price of preventive maintenance check
- ☑ **Fast help by phone** – we call it Rapid Resolution – phone support from a Sears representative. Think of us as a "talking owner's manual."

Once you purchase the Repair Protection Agreement, a simple phone call is all that it takes for you to schedule service. You can call anytime day or night, or schedule a service appointment online.

The Repair Protection Agreement is a risk-free purchase. If you cancel for any reason during the product warranty period, we will provide a full refund. Or, a prorated refund anytime after the product warranty period expires. Purchase your Repair Protection Agreement today!

Some limitations and exclusions apply.
For prices and additional information call 1-800-827-6655.

Sears Installation Service

For Sears professional installation of home appliances, garage door openers, water heaters, and other major home items, in the U.S.A. call **1-800-4-MY-HOME®**

WARRANTY

KENMORE GRILL WARRANTY

One Year Full Warranty on Kenmore Grill

If this grill fails due to a defect in material or workmanship within one year from the date of purchase, call 1-800-4-MY-HOME® to arrange for free repair (or replacement if repair proves impossible).

Five-Year Limited Warranty on Burners

For five years from the date of purchase, any burner that rusts through will be replaced free of charge. After the first year from the date of purchase, you pay for labor if you wish to have it installed.

All warranty coverage excludes ignitor batteries and grill part paint loss, discoloration or rusting, which are either expendable parts that can wear out from normal use within the warranty period, or are conditions that can be the result of normal use, accident or improper maintenance.

All warranty coverage is void if this grill is ever used for commercial or rental purposes.

All warranty coverage applies only if this grill is used in the United States.

This warranty gives you specific legal rights, and you may also have other rights which vary from state to state.

Sears, Roebuck and Co., Hoffman Estates, IL 60179

DANGER

- **NEVER store a spare LP cylinder under or near the appliance or in an enclosed area.**

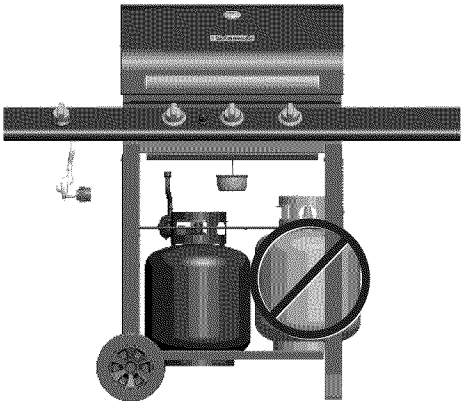

- **Never fill a cylinder beyond 80% full.**
- **If the information in two points above is not followed exactly, a fire causing death or serious injury may occur.**
- **An over filled or improperly stored cylinder is a hazard due to possible gas release from the safety relief valve. This could cause an intense fire with risk of property damage, serious injury or death.**
- **If you see, smell or hear gas escaping, immediately get away from the LP cylinder/appliance and call your fire department.**

LP Tank Removal, Transport And Storage

- Turn OFF all control knobs and LP tank valve. Turn coupling nut counterclockwise by hand only - do not use tools to disconnect. Lift LP tank wire upward off of LP tank collar, then lift LP tank up and off of support bracket. Install safety cap onto LP tank valve. Always use cap and strap supplied with valve. **Failure to use safety cap as directed may result in serious personal injury and/or property damage.**

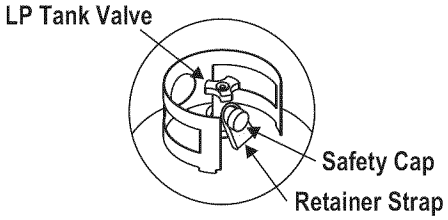

- A disconnected LP tank in storage or being transported must have a safety cap installed (as shown). Do not store an LP tank in enclosed spaces such as a carport, garage, porch, covered patio or other building. Never leave an LP tank inside a vehicle which may become overheated by the sun.
- Do not store an LP tank in an area where children play.

LP Cylinder

- **The LP cylinder used with your grill must meet the following requirements:**
- Use LP cylinders only with these required measurements: 12" (30.5cm) (diameter) x 18" (45.7 cm) (tall) with 20 lb. (9 kg.) capacity maximum.
- LP cylinders must be constructed and marked in accordance with specifications for LP cylinders of the U.S. Department of Transportation (DOT) or for Canada, CAN/CSA-B339, cylinders, spheres and tubes for transportation of dangerous goods. Transport Canada (TC). See LP cylinder collar for marking.
- LP cylinder valve must have:
  - Type 1 outlet compatible with regulator or grill.
  - Safety relief valve.
  - UL listed Overfill Protection Device (OPD). This OPD safety feature is identified by a unique triangular hand wheel. **Use only LP cylinders equipped with this type of valve.**

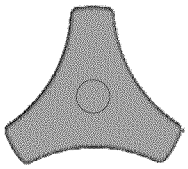

OPD Hand Wheel

- LP cylinder must be arranged for vapor withdrawal and include collar to protect LP cylinder valve. Always keep LP cylinders in upright position during use, transit or storage.

LP cylinder in upright position for vapor withdrawal

LP (Liquefied Petroleum Gas)

- LP gas is nontoxic, odorless and colorless when produced. **For Your Safety**, LP gas has been given an odor (similar to rotten cabbage) so that it can be smelled.
- LP gas is highly flammable and may ignite unexpectedly when mixed with air.

LP Cylinder Filling

- Use only licensed and experienced dealers.
- LP dealer **must purge new cylinder** before filling.
- Dealer should **NEVER** fill LP cylinder more than 80% of LP cylinder volume. Volume of propane in cylinder will vary by temperature.
- A frosty regulator indicates gas overfill. Immediately close LP cylinder valve and call local LP gas dealer for assistance.
- Do not release liquid propane (LP) gas into the atmosphere. This is a hazardous practice.
- To remove gas from LP cylinder, contact an LP dealer or call a local fire department for assistance. Check the telephone directory under “Gas Companies” for nearest certified LP dealers.

LP Tank Exchange

•Many retailers that sell grills offer you the option of replacing your empty LP tank through an exchange service. Use only those reputable exchange companies that inspect, precision fill, test and certify their cylinders. **Exchange your tank only for an OPD safety feature-equipped tank as described in the "LP Tank" section of this manual.**

•Always keep new and exchanged LP tanks in upright position during use, transit or storage.

•**Leak test new and exchanged LP tanks BEFORE connecting to grill.**

LP Tank Leak Test

For your safety

•Leak test must be repeated each time LP tank is exchanged or refilled.

•Do not smoke during leak test.

•Do not use an open flame to check for gas leaks.

•Grill must be leak tested outdoors in a well-ventilated area, away from ignition sources such as gas fired or electrical appliances. During leak test, keep grill away from open flames or sparks.

•Use a clean paintbrush and a 50/50 mild soap and water solution. Brush soapy solution onto areas indicated by arrows in figure below. Leaks are indicated by growing bubbles.

WARNING

If "growing" bubbles appear do not use or move the LP tank. Contact an LP gas supplier or your fire department!

▲ **Do not use household cleaning agents.** Damage to gas train components can result.

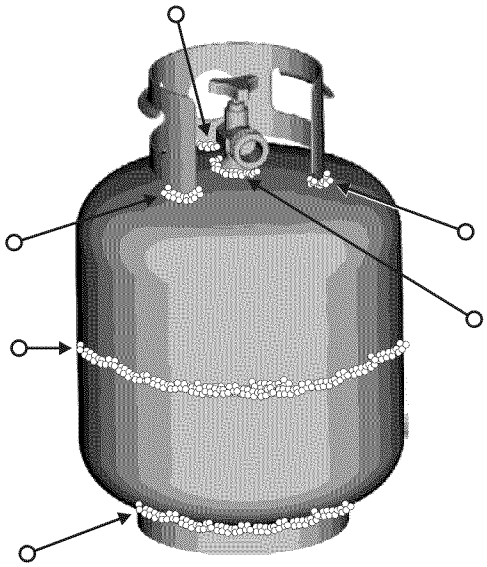

Connecting Regulator To The LP Tank

1.LP tank must be properly secured onto grill. (Refer to assembly section.)

2.Turn all control knobs to the OFF position.

3.Turn LP tank OFF by turning OPD hand wheel clockwise to a **full stop**.

4.Remove the protective cap from LP tank valve. Always use cap and strap supplied with valve.

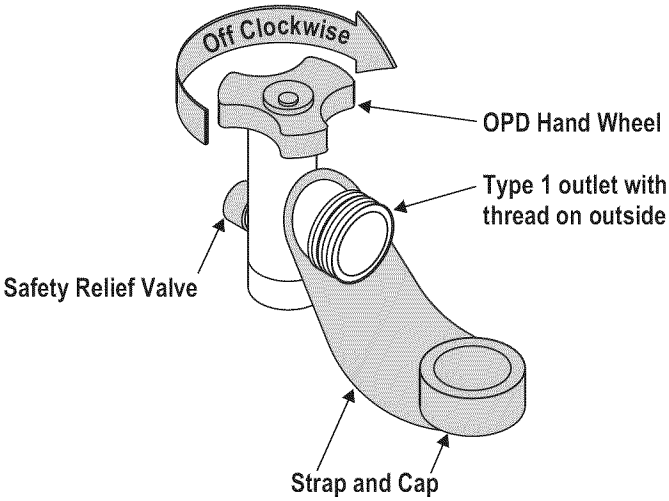

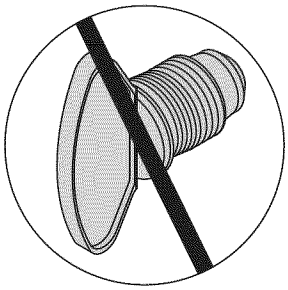

Do not use a POL transport plug (plastic part with external threads)! It will defeat the safety feature of the valve.

5.Hold regulator and insert nipple into LP tank valve. Hand-tighten the coupling nut, holding regulator in a straight line with LP tank valve so as not to cross-thread the connection.

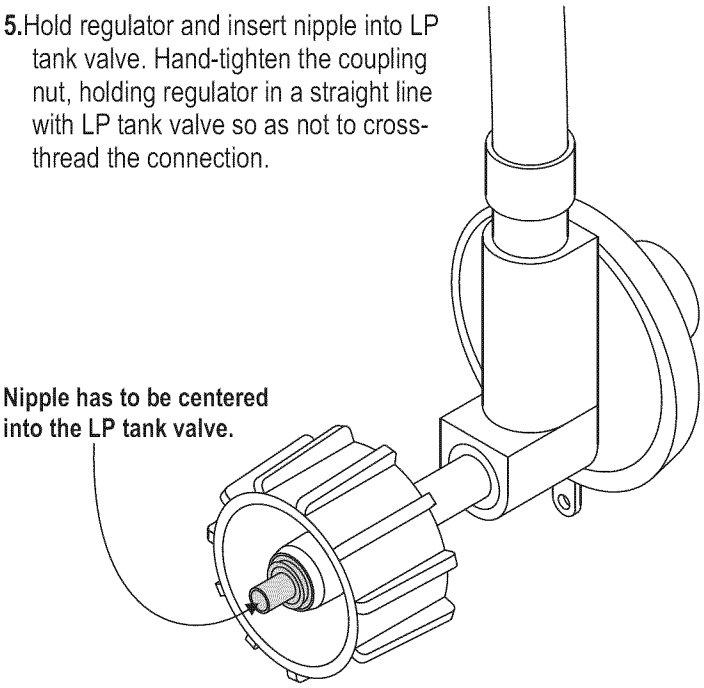

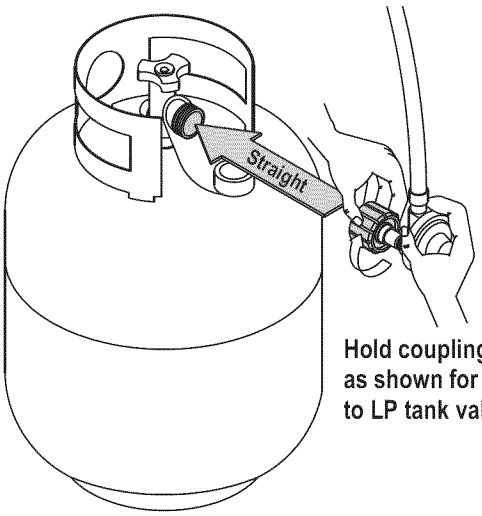

Hold coupling nut and regulator as shown for proper connection to LP tank valve.

6. Turn the coupling nut clockwise and tighten to a full stop. The regulator will seal on the back-check feature in the LP tank valve, resulting in some resistance. **An additional one-half to three-quarters turn is required to complete the connection. Tighten by hand only – do not use tools.**

NOTE:

If you cannot complete the connection, disconnect regulator and repeat steps 5 and 6. If you are still unable to complete the connection, **do not use this regulator!**

DANGER

- Do not insert any tool or foreign object into the valve outlet or safety relief valve. You may damage the valve and cause a leak. Leaking propane may result in explosion, fire, severe personal injury, or death.

WARNING

- Outdoor gas appliance is not intended to be installed in or on a boat.
- Outdoor gas appliance is not intended to be installed in or on an RV.
- Never attempt to attach this grill to the self-contained LP gas system of a camper trailer or motor home.
- Do not use grill until leak-tested.
- If a leak is detected at any time, STOP and call the fire department.
- If you cannot stop a gas leak, *immediately* close LPcylinder valve and call LP gas supplier or your fire department!

Leak Testing Valves, Hose and Regulator

1. Turn all grill control knobs to OFF.

2. Be sure regulator is tightly connected to LP tank.

3. Completely open LP tank valve by turning OPD hand wheel counterclockwise. If you hear a *rushing sound*, turn gas off immediately. There is a major leak at the connection. **Correct before proceeding** by calling Sears for replacement parts at **1-800-4-MY-HOME®**.

4. Brush soapy solution onto areas where bubbles are shown in picture below:

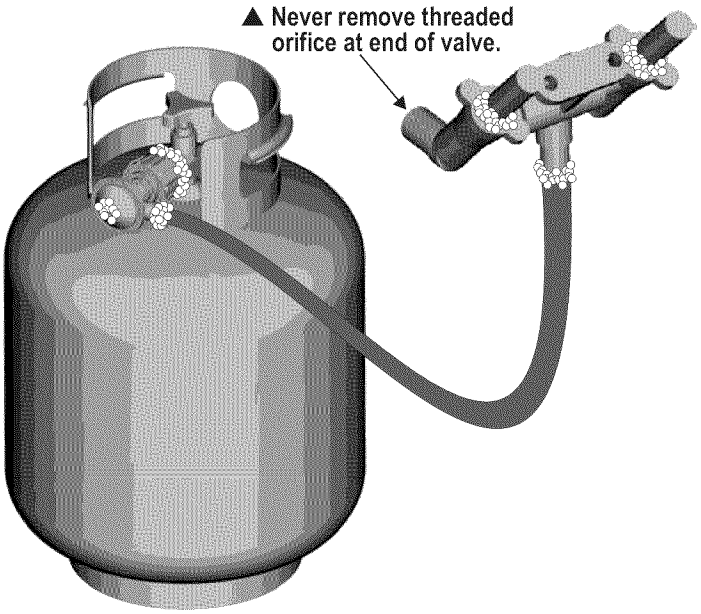

5. If "growing" bubbles appear, there is a leak. Close LP tank valve immediately and retighten connections. **If leaks cannot be stopped do not try to repair.** Call Sears for replacement parts at **1-800-4-MY-HOME®**.

6. Always close LP tank valve after performing leak test by turning hand wheel clockwise.

WARNING

For Safe Use of Your Grill and to Avoid Serious Injury:

- Do not let children operate or play near grill.
- Keep grill area clear and free from materials that burn.
- Do not block holes in sides or back of grill.
- Check burner flames regularly.
- Use grill only in well-ventilated space. NEVER use in enclosed space such as carport, garage, porch, covered patio, or under an overhead structure of any kind.
- Do not use charcoal or ceramic briquets in a gas grill. (*Unless briquets are supplied with your grill.)*
- **Use grill at least 3 ft. from any wall or surface.** Maintain 10 ft. clearance to objects that can catch fire or sources of ignition such as pilot lights on water heaters, live electrical appliances, etc.

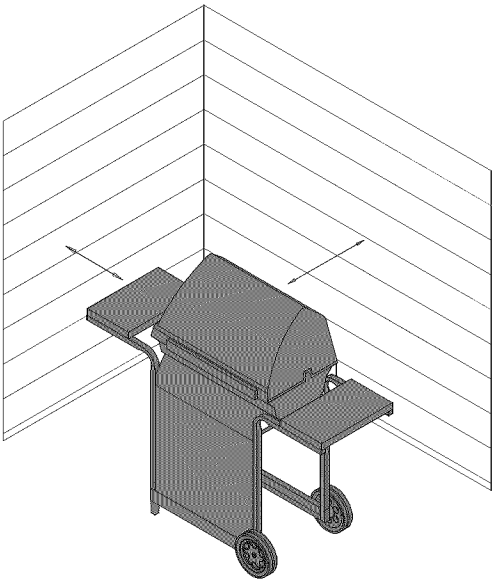

- **Apartment Dwellers:**

  Check with management to learn the requirements and fire codes for using an LP gas grill in your apartment complex. If allowed, use outside on the ground floor with a three (3) foot clearance from walls or rails. Do not use on or under balconies.
- **NEVER attempt to light burner with lid closed. A buildup of non-ignited gas inside a closed grill is hazardous.**
- **Never operate grill with LP cylinder out of correct position specified in assembly instructions.**
- **Always close LP cylinder valve and remove coupling nut before moving LP cylinder from specified operation position.**

Safety Tips

▲ Before opening LP cylinder valve, check the coupling nut for tightness.

▲ When grill is not in use, turn off all control knobs and LP cylinder valve.

▲ Never move grill while in operation or still hot.

▲ Use long-handled barbecue utensils and oven mitts to avoid burns and splatters.

▲ Maximum load for sideburner and side shelf is 10 lbs.

▲ The grease tray **must** be inserted into grill and emptied after each use. Do not remove grease tray until grill has completely cooled.

▲ Clean grill often, preferably after each cookout. If a bristle brush is used to clean any of the grill cooking surfaces, ensure no loose bristles remain on cooking surfaces prior to grilling. It is not recommended to clean cooking surfaces while grill is hot.

▲ If you notice grease or other hot material dripping from grill onto valve, hose or regulator, turn off gas supply at once. Determine the cause, correct it, then clean and inspect valve, hose and regulator before continuing. Perform a leak test.

▲ Keep ventilation openings in cylinder enclosure (grill cart) free and clear of debris.

▲ Do not store objects or materials inside the grill cart enclosure that would block the flow of combustion air to the underside of either the control panel or the firebox bowl.

▲ The regulator may make a humming or whistling noise during operation. This will not affect safety or use of grill.

▲ If you have a grill problem see the *"Troubleshooting Section"*.

▲ If the regulator frosts, turn off grill and LP cylinder valve immediately. This indicates a problem with the cylinder and it should not be used on any product. Return to supplier!

CAUTION

- **Putting out grease fires by closing the lid is not possible. Grills are well ventilated for safety reasons.**
- **Do not use water on a grease fire. Personal injury may result. If a grease fire develops, turn knobs and LP cylinder off.**
- **Do not leave grill unattended while preheating or burning off food residue on HI. If grill has not been regularly cleaned, a grease fire can occur that may damage the product.**

Main Burner Ignitor Lighting

▲ **Do not lean over grill while lighting.**

1. Open lid during lighting.
2. Turn **ON** valve from source or tank.
3. Push and turn Ignition Burner control knob to ⚡ HI and immediately press and hold Electronic Ignitor button.
4. If ignition does **NOT** occur in 5 seconds, turn Ignition Burner control knob **OFF**, wait 5 minutes for gas to clear and repeat the lighting instructions.
5. To light other burners turn control knob to HI. If ignitor does not work, follow match lighting instructions.

After Lighting: Turn knobs to HI position for 15 minutes to pre-heat grill. Then turn knob to desired setting for cooking.

Lighting instructions continued on next page.

WARNING

Turn controls and gas source or tank OFF when not in use.

CAUTION

If ignition does NOT occur in 5 seconds, turn the burner controls OFF, wait 5 minutes and repeat the lighting procedure. If the burner does not ignite with the valve open, gas will continue to flow out of the burner and could accidently ignite with risk of injury.

Match-Lighting

▲ **Do not lean over grill while lighting.**

1. **Open lid during lighting.**
2. Place match into match holder (hanging from side of cart). Light match, place into lighting hole on right side of firebox.
3. Push in and turn right knob to HIGH position. Be sure burner lights and stays lit.
4. Light other burners by pushing knob in and turning to ⚡ HI position.

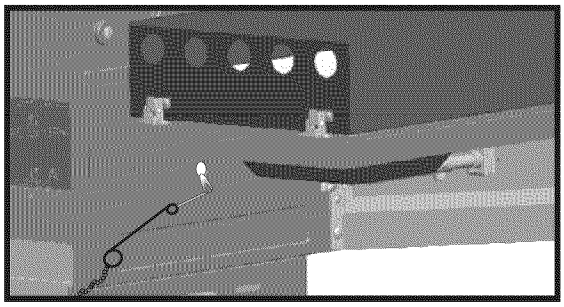

Sideburner Ignitor Lighting

▲ **Do not lean over grill while lighting.**

1. **Open sideburner lid.** Turn on gas at LP cylinder.
2. Turn sideburner knob to HI, push and hold ELECTRONIC IGNITOR button.
3. If sideburner does NOT light, turn knob to OFF, wait 5 minutes, then repeat lighting procedure.

Sideburner Match Lighting

1. **Open sideburner lid.** Turn on gas at LP cylinder.
2. Place lit match near burner.
3. Turn sideburner knob to HI. Be sure burner lights and stays lit.

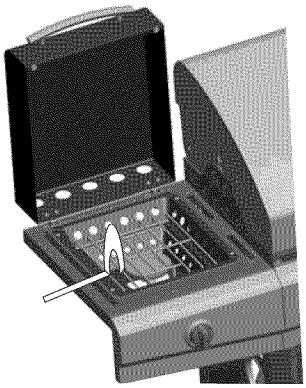

Burner Flame Check

•Remove cooking grates and flame tamers. Light burners, rotate knobs from HIGH to LOW. You should see a smaller flame in LOW position than seen on HIGH. Perform burner flame check on sideburner, also. Always check flame prior to each use. If only low flame is seen refer to "Sudden drop or low flame" in the *Troubleshooting Section*.

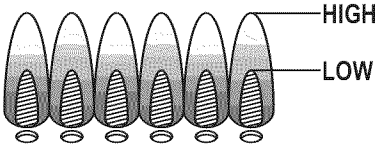

Turning Grill Off

•Turn all knobs to **OFF** position. Turn LP cylinder off by turning hand-wheel clockwise to a full stop.

Ignitor Check

•**Turn gas off at LP cylinder.** Press and hold electronic ignitor button. "Click" should be heard and spark seen each time between collector box or burner and electrode. See *"Troubleshooting"* if no click or spark.

Valve Check

•**Important: Make sure gas is off at LP cylinder before checking valves**. Knobs lock in **OFF** position. To check valves, first push in knobs and release, knobs should spring back. If knobs do not spring back, replace valve assembly before using grill. Turn knobs to **LOW** position then turn back to **OFF** position. Valves should turn smoothly.

Hose Check

•Before each use, check to see if hoses are cut or worn. Replace damaged hoses before using grill. Use only valve/hose/regulator specified by manufacturer.

General Grill Cleaning

•Do not mistake brown or black accumulation of grease and smoke for paint. Interiors of gas grills are not painted at the factory **(and should never be painted)**. Apply a strong solution of detergent and water or use a grill cleaner with scrub brush on insides of grill lid and bottom. Rinse and allow to completely air dry. **Do not apply a caustic grill/oven cleaner to painted surfaces.**

• **Plastic parts:** Wash with warm soapy water and wipe dry.
▲ Do not use citrisol, abrasive cleaners, degreasers or a concentrated grill cleaner on plastic parts. Damage to and failure of parts can result.

•**Porcelain surfaces:** Because of glass-like composition, most residue can be wiped away with baking soda/water solution or specially formulated cleaner. Use nonabrasive scouring powder for stubborn stains.

•**Painted surfaces:** Wash with mild detergent or nonabrasive cleaner and warm soapy water. Wipe dry with a soft nonabrasive cloth.

•**Stainless steel surfaces:** To maintain your grill's high quality appearance, wash with mild detergent and warm soapy water and wipe dry with a soft cloth after each use. Baked-on grease deposits may require the use of an abrasive plastic cleaning pad. Use only in direction of brushed finish to avoid damage. Do not use abrasive pad on areas with graphics.

• **Cooking surfaces:** If a bristle brush is used to clean any of the grill cooking surfaces, ensure no loose bristles remain on cooking surfaces prior to grilling. It is not recommended to clean cooking surfaces while grill is hot.

CAUTION

SPIDER ALERT!

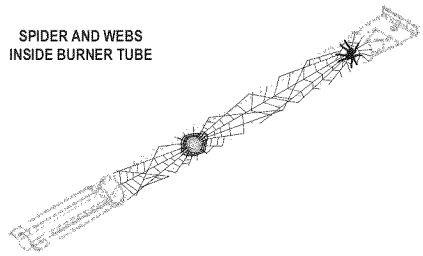

If you notice that your grill is getting hard to light or that the flame isn't as strong as it should be, take the time to check and clean the venturi's.

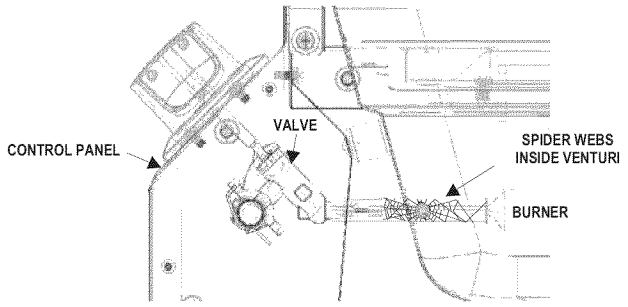

In some areas of the country, spiders or small insects have been known to create "flashback" problems. The spiders spin webs, build nests and lay eggs in the grill's venturi tube(s) obstructing the flow of gas to the burner. The backed-up gas can ignite in the venturi behind the control panel. This is known as a flashback and it can damage your grill and even cause injury.

To prevent flashbacks and ensure good performance the burner and venturi assembly should be removed from the grill and cleaned before use whenever the grill has been idle for an extended period.

Cleaning the Burner Assembly

Follow these instructions to clean and/or replace parts of burner assembly or if you have trouble igniting grill.

1. **Turn gas off at control knobs and LP cylinder.**
2. Remove cooking grates and flame tamers.
3. Remove screws and carryover tubes from rear of burners.
4. Remove screw and washers to disengage burner from bracket on firebox.
5. Remove screws to detach electrode from burner. Electrode should remain in firebox.
6. Carefully lift each burner up and away from valve openings.

We suggest three ways to clean the burner tubes. Use the one easiest for you.

(A) Bend a stiff wire (a light weight coat hanger works well) into a small hook. Run the hook through each burner tube several times.

(B) Use a narrow bottle brush with a flexible handle (do not use a brass wire brush), run the brush through each burner tube several times.

(C) **Wear eye protection:** Use an air hose to force air into the burner tube and out the burner ports. Check each port to make sure air comes out each hole.

7. Wire brush entire outer surface of burner to remove food residue and dirt.
8. Clean any blocked ports with a stiff wire such as an open paper clip.
9. Check burner for damage, due to normal wear and corrosion some holes may become enlarged. If any large cracks or holes are found replace burner.

VERY IMPORTANT: Burner tubes must reengage valve openings. See illustrations at right.

10. Attach electrode to burner.
11. Carefully replace burners.
12. Attach burners to brackets on firebox.
13. Reposition carryover tubes and attach to burners. Replace flame tamers and cooking grates.

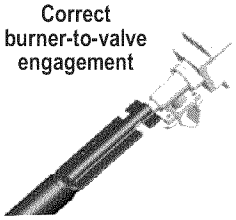

Storing Your Grill

- Clean cooking grates.
- Store in dry location.
- When LP cylinder is connected to grill, store outdoors in a well-ventilated space and out of reach of children.
- Cover grill if stored outdoors. Choose from a variety of grill covers offered by manufacturer.
- Store grill indoors ONLY if LP cylinder is turned off and disconnected, removed from grill and stored outdoors.
- When removing grill from storage, follow "*Cleaning the Burner Assembly*" instructions before starting grill.

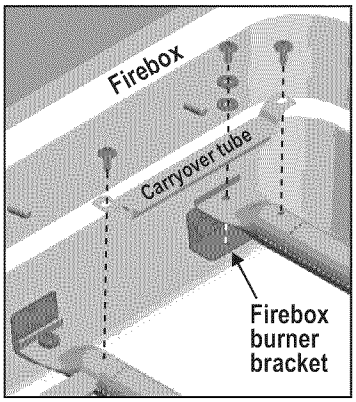

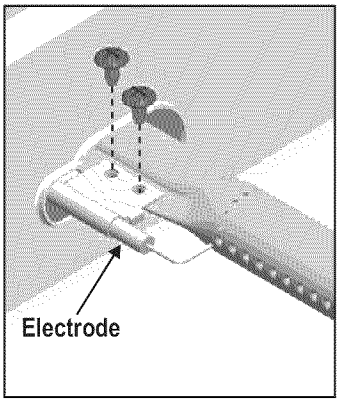

Indirect Cooking

Poultry and large cuts of meat cook slowly to perfection on the grill by indirect heat. The heat from selected burners circulates gently throughout the grill, cooking meat or poultry without the touch of a direct flame. This method greatly reduces flare-ups when cooking extra fatty cuts because there is no direct flame to ignite the fats and juices that drip during cooking.

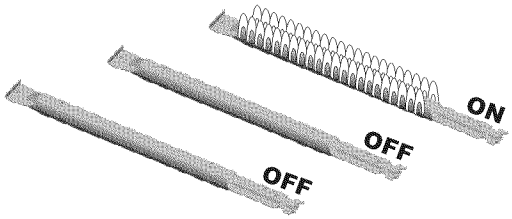

1 Burner Cooking

Cook with direct or indirect heat.
Best for smaller meals or foods.
Consumes less fuel.

Indirect Cooking Instructions

- Always cook with the lid closed.
- Due to weather conditions, cooking times may vary. During cold and windy conditions the temperature setting may need to be increased to insure sufficient cooking temperatures

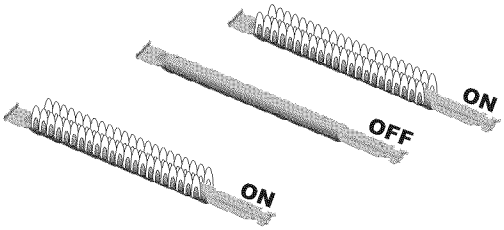

2 Burner Cooking

Great indirect cooking on low.
Produces slow, even heating.
Ideal for slow roasting and baking.

Food Safety

Food safety is a very important part of enjoying the outdoor cooking experience. To keep food safe from harmful bacteria, follow these four basic steps:

Clean: Wash hands, utensils, and surfaces with hot soapy water before and after handling raw meat and poultry.

Separate: Separate raw meats and poultry from ready-to-eat foods to avoid cross contamination. Use a clean platter and utensils when removing cooked foods.

Cook: Cook meat and poultry thoroughly to kill bacteria. Use a thermometer to ensure proper internal food temperatures.

Chill: Refrigerate prepared foods and leftovers promptly.

For more information call: USDA Meat and Poultry Hotline at 1-800-535-4555 (In Washington, DC (202) 720-3333, 10:00 am-4:00 pm EST).

How To Tell If Meat Is Grilled Thoroughly

- Meat and poultry cooked on a grill often browns very fast on the outside. Use a meat thermometer to be sure food has reached a safe internal temperature, and cut into food to check for visual signs of doneness.
- Whole poultry should reach 165° F. Juices should run clear and flesh should not be pink.
- Hamburgers made of any ground meat or poultry should reach 160° F, and be brown in the middle with no pink juices. Beef, veal and lamb steaks, roasts and chops can be cooked to 145° F. All cuts of pork should reach 160° F.
- NEVER partially grill meat or poultry and finish cooking later. Cook food completely to destroy harmful bacteria.
- When reheating takeout foods or fully cooked meats like hot dogs, grill to 165° F, or until steaming hot.

WARNING: To ensure that it is safe to eat, food must be cooked to the minimum internal temperatures listed in the table below.

USDA* Safe Minimum Internal Temperatures	
Fish	145°F
Pork	160°F
Egg Dishes	160°F
Steaks and Roasts of Beef, Veal or Lamb	145°F
Ground Beef, Veal or Lamb	160°F
Whole Poultry (Turkey, Chicken, Duck, etc.)	165°F
Ground or Pieces Poultry (Chicken Breast, etc.)	165°F

*United States Department of Agriculture

Using Storage Tray and Lid and Grate Lifter Handle

The tray, lid and grate lifter handle included with this grill are for food preparation, serving, grilling, and leftover storage. The tray, lid and grates are dishwasher safe, making them easy to clean after use. Additional trays, lids and grate lifter handles are available at www.sears.com.

- Preparation: Prepare food directly on the grate. Grate fits snugly in the storage tray so you can leave food to marinate overnight without dirtying a single dish.

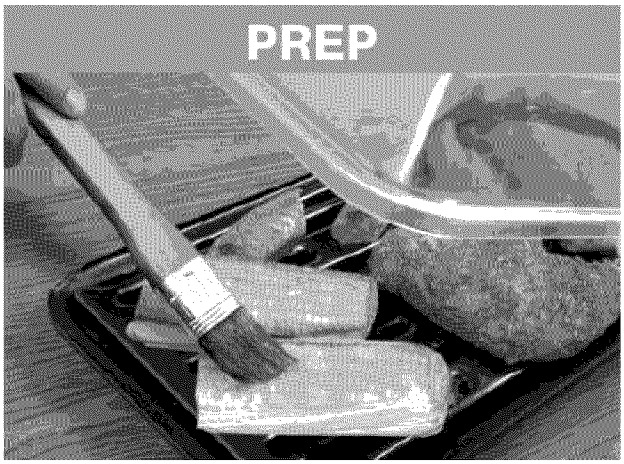

- Grilling: Use the grate lifter handle to easily transfer prepped food to the grill. Remove grate lifter handle once grate is inserted into grill.

NOTE:
You may also use the grate lifter handle and tray to make it easy and safe to check the internal temperature of your food. Use the handle to lift the grate with food out of the grill and onto the tray. Use food thermometer to check temperature internal temperature. Then use handle to return grate to grill if more cooking time is necessary.

- Serving: Once food is grilled to taste, use grate lifter handle to lift grate back onto the tray, and serve food directly from the grate.

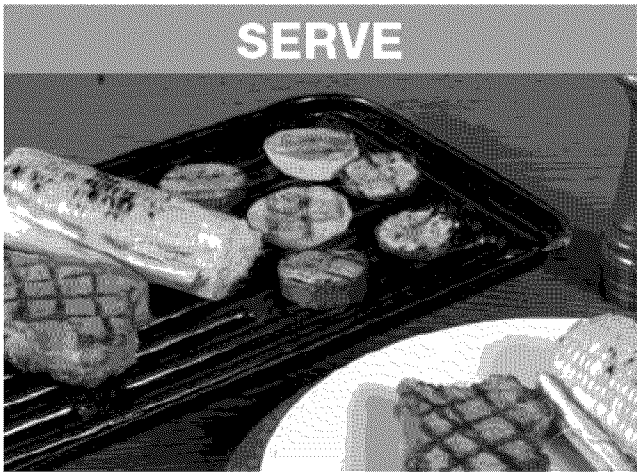

- Storage: For leftover storage, snap lid on tray and place in refrigerator.

WARNING:
- Do not leave the grate lifter handle attached to the grate while cooking. The handle should be used only when moving the grate.
- When the grate is removed from the grill and placed on the tray, it will be hot. Use a hot pad or oven mitt when handling the tray containing a hot grate.
- Do not place the tray lid on the tray when it contains a hot grate.

PARTS LIST

Key	Qty	Description	Part #
1	1	LEFT LEG ASSEMBLY	80018411
2	1	MATCH HOLDER	80004320
3	1	RIGHT LEG ASSEMBLY	80018410
4	1	BOTTOM SHELF	80008549
5	1	AXLE ROD	80008572
6	2	WHEEL	80013777
7	1	LEG EXTENDER, FRONT	80008596
8	1	LEG EXTENDER, REAR	80000076
9	1	BACK RAIL	80012064
10	1	LOWER FRONT PANEL	80008569
11	1	UPPER BRACE	80018417
12	1	UPPER FRONT PANEL, FOLDING	80018405
13	1	FRONT PANEL MAGNET	80018416
14	1	HANDLE, F/ FRONT PANEL	80018085
15	1	TOP LID	80018073
16	1	LOGO PLATE	80010544
17	1	TEMPERATURE GAUGE	80009025
18	2	SILICONE RUBBER BUMPER, F/ MAIN LID	80006983
19	2	SILICONE REAR RUBBER BUMPER, F/ MAIN LID	80005833
20	1	HANDLE F/ TOP LID	80009026
21	1	TOP LID HARDWARE	80017646
22	1	FIREBOX	80018767
23	3	MAIN BURNER TUBE	80018369
24	1	ELECTRODE, MAIN BURNER	80009029
25	2	FLAME CARRY OVER TUBE	80009028
26	1	MAIN CONTROL PANEL	80018399
27	1	ELECTRONIC IGNITION MODULE	80018396
28	1	HOSE VALVE REGULATOR	80018426
29	4	BEZEL, F/ CONTROL KNOB	80014406
30	4	CONTROL KNOB	80014405
31	1	RIGHT SIDE SHELF	80008553
32	1	TOOL HOLDER, F/ GRATE LIFTER	80018125
33	1	FASCIA, F/ RIGHT SHELF	80018432
34	1	COOKING TIMER, T420 WW	80018433
35	1	SIDEBURNER SHELF	80008534
36	1	DRIP PAN, F/ SIDEBURNER	80016432
37	1	SIDEBURNER LID	80015642
38	1	FASCIA, F/ SIDEBURNER SHELF	80018431
39	1	SIDEBURNER	80014461
40	1	ELECTRODE, F/ SIDEBURNER	80017596
41	1	IGNITOR WIRE, F/ SIDEBURNER	80012457

Key	Qty	Description	Part#
42	1	BURNER CLIP F/ SIDE BURNER	80001424
43	1	SIDEBURNER GRID	80018052
44	1	SHIELD, FRONT, FIREBOX	80018044
45	3	HEAT DIFFUSER	80018051
46	3	COOKING GRATE	80018078
47	1	SWING AWAY GRATE	80008532
48	1	CAP, F/ ELECTRONIC IGNITION	80014444
49	1	GRATE LIFTER HANDLE	80018091
50	1	STORAGE TRAY	80018093
51	1	LID, F/ STORAGE TRAY	80018092
52	1	TOOL BASKET	80017877
53	1	CLIP, F/ GREASE CUP	80000271
54	1	GREASE CUP	80000270
55	1	TANK THUMBSCREW	80006484

NOT Pictured

...	1	PRODUCT MANUAL, ENGLISH	80018088
...	1	PRODUCT MANUAL, SPANISH	80018089
...	1	HARDWARE PACK	80018406

If you are missing hardware or have damaged parts, please call 1-800-241-7548 for replacement.

NOTE: Some grill parts shown in the assembly steps may differ slightly in appearance from those on your particular grill model. However, the method of assembly remains the same.

PARTS DIAGRAM

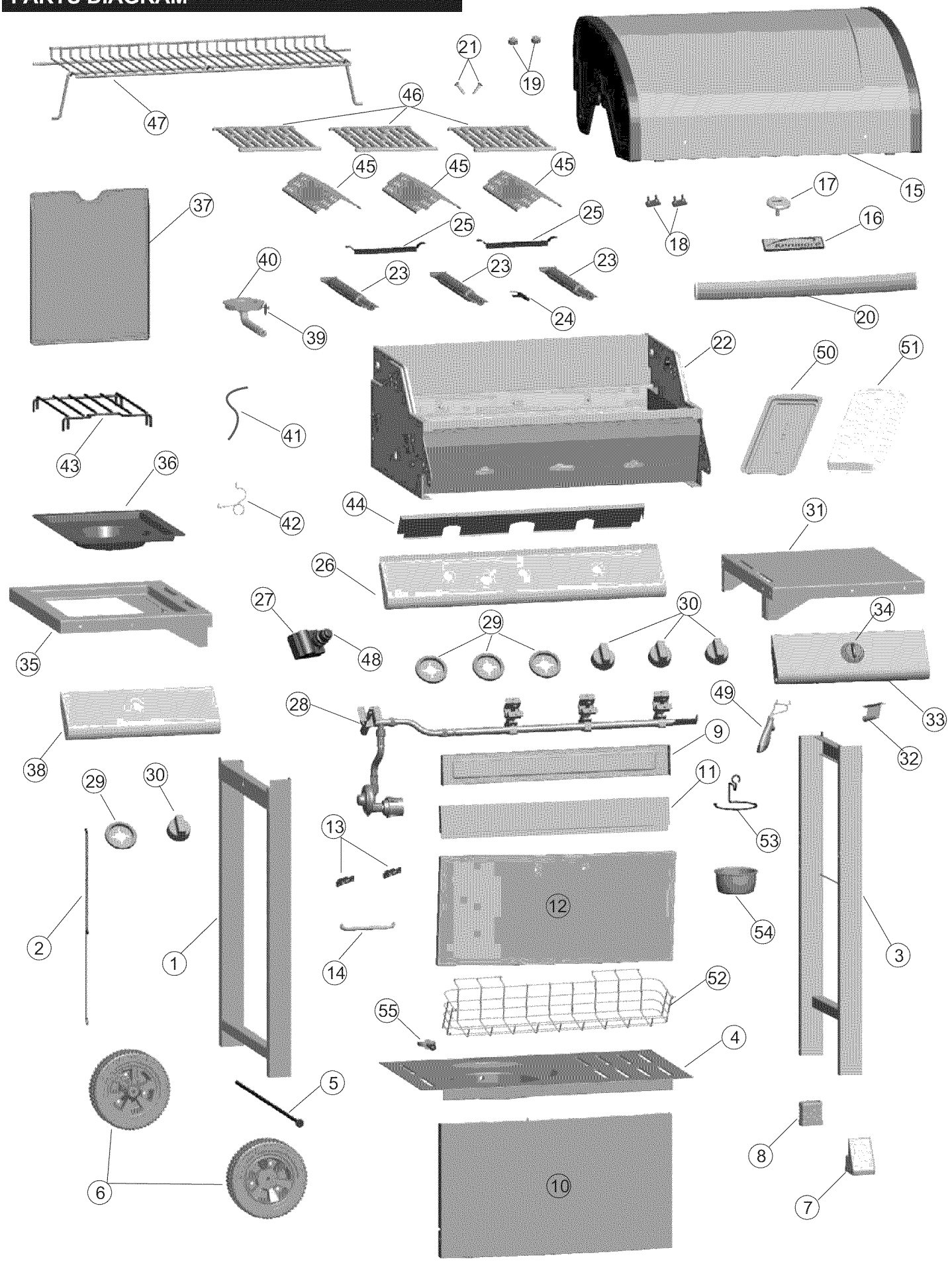

1

Bottom Shelf to Legs

- ☐ Place bottom shelf end with cut out hole for LP cylinder between legs with axle holes. Attach to right and left leg assemblies with (4)**1/4-20x1-1/2" screws** and **1/4-20 flange nuts.**
- ☐ Tighten securely.

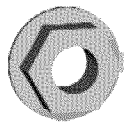

1/4-20 Flange nuts
Qty. 4

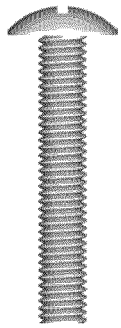

1/4-20x1-1/2" Screws
Qty. 4

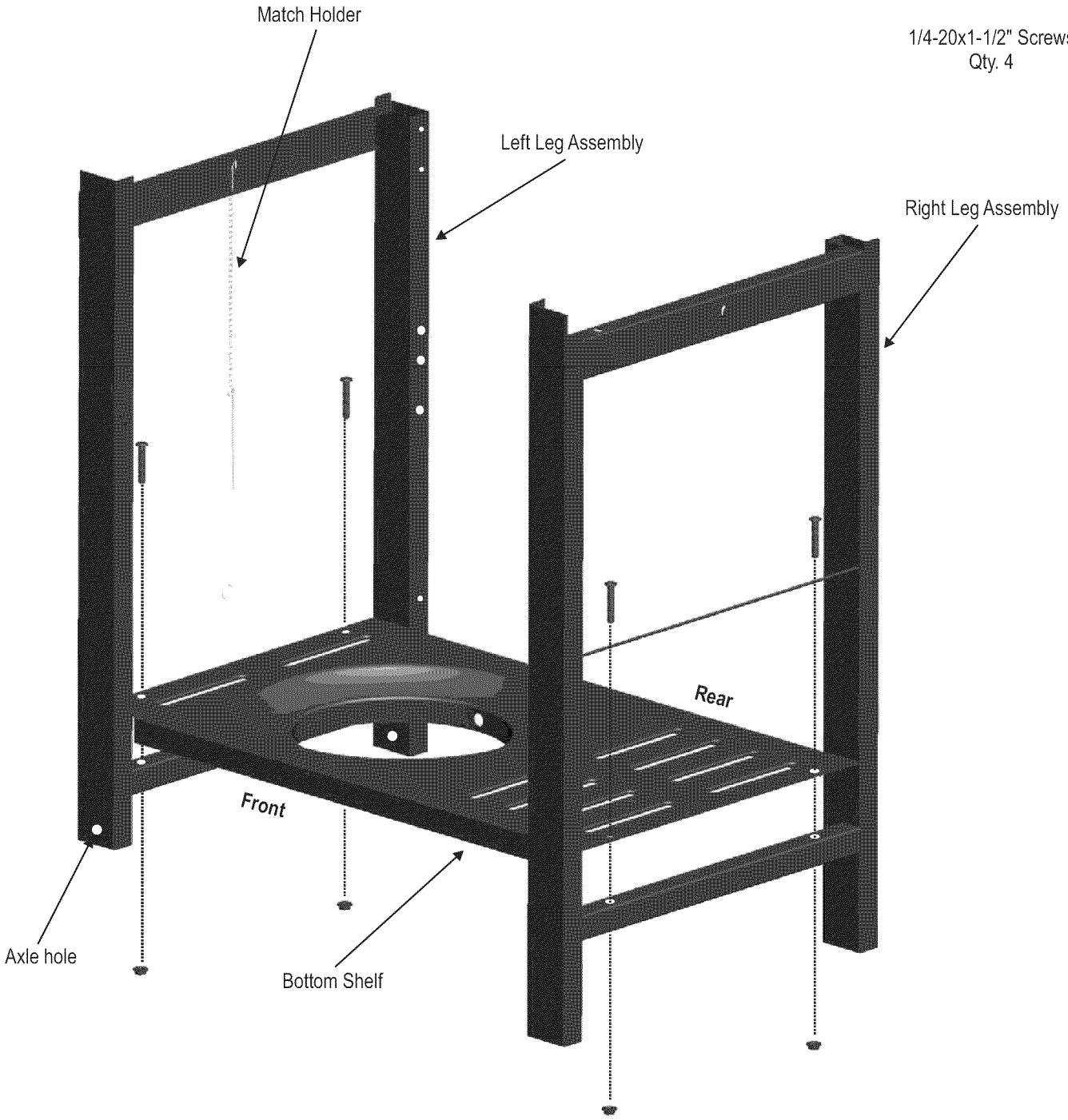

2 Wheels and Leg Extenders to Cart

- ☐ Turn assembly upside down.
- ☐ Insert axle rod through wheel, wheel spacer, legs, wheel spacer and other wheel. Attach with (1) Axle washer and hitch pin.
- ☐ Hammer leg extenders into right legs.

Wheel Spacer
Qty. 2

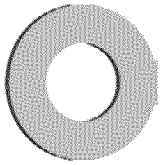

Axle Washer
Qty. 1

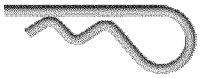

Hitch Pin
Qty. 1

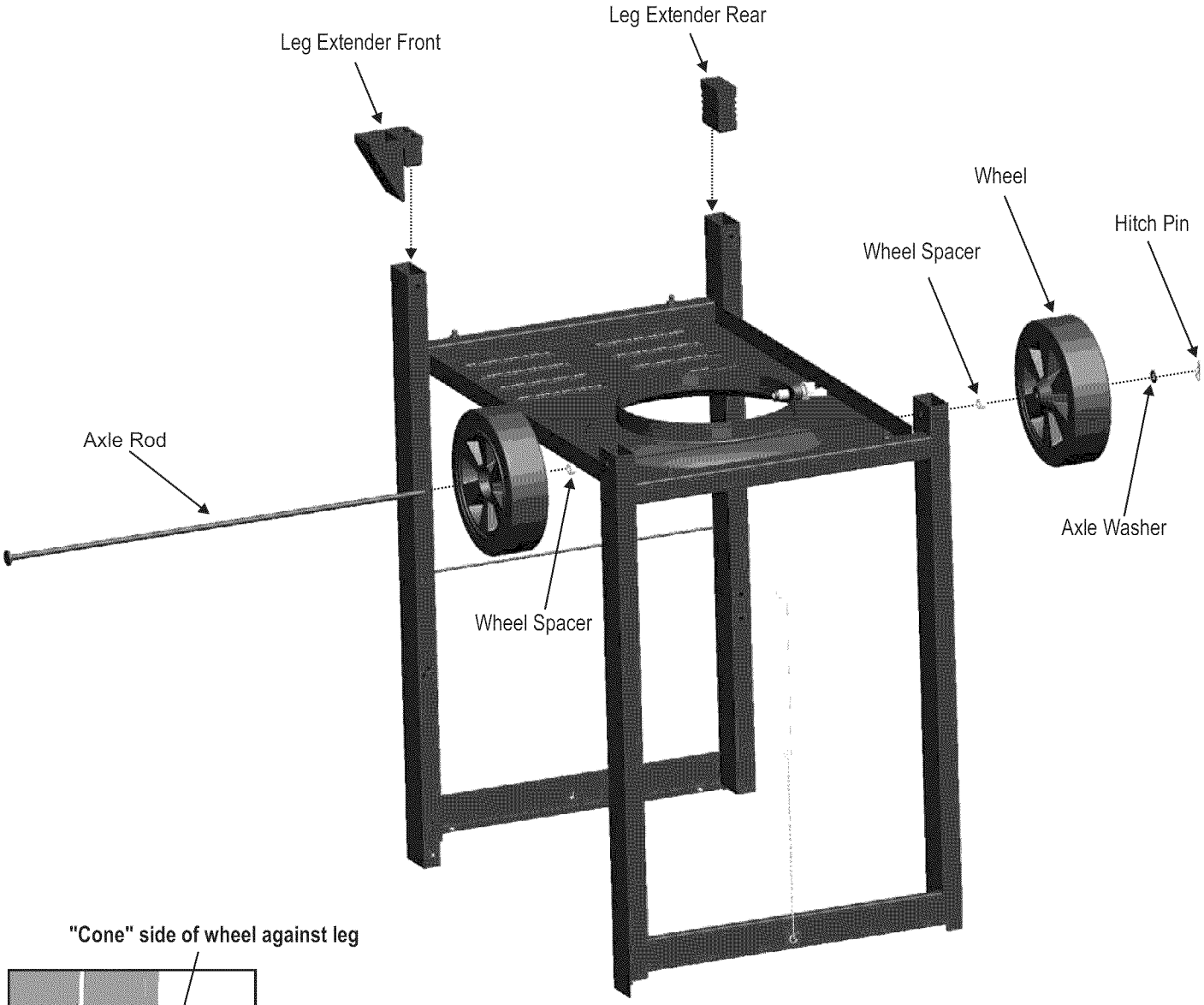

"Cone" side of wheel against leg

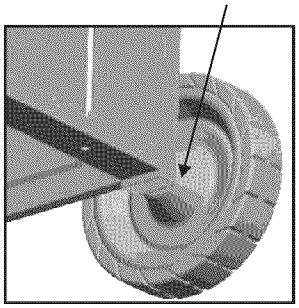

3

Back Brace , Lower Front Panel

- ☐ Stand cart upright.
- ☐ Attach back brace to top of cart with (4) **#8x3/8" self-tap screws**.
- ☐ Attach lower front panel to lower half of cart with (4) **#8x3/8" self-tap screws**.

  NOTE: The lower front panel is the one that does not have two top center holes for handle attachment.

#8x3/8"
self-tap screws
Qty. 8

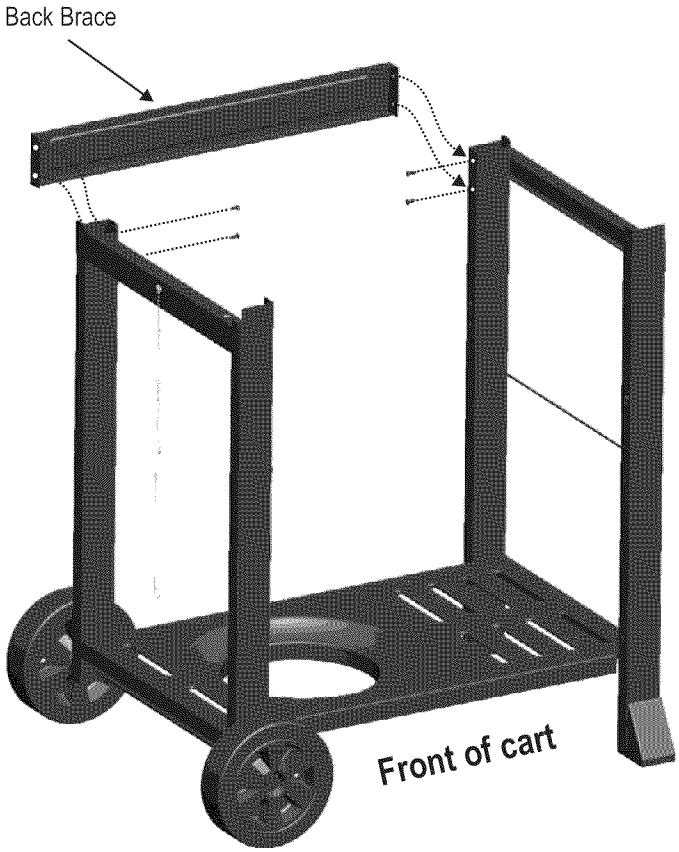

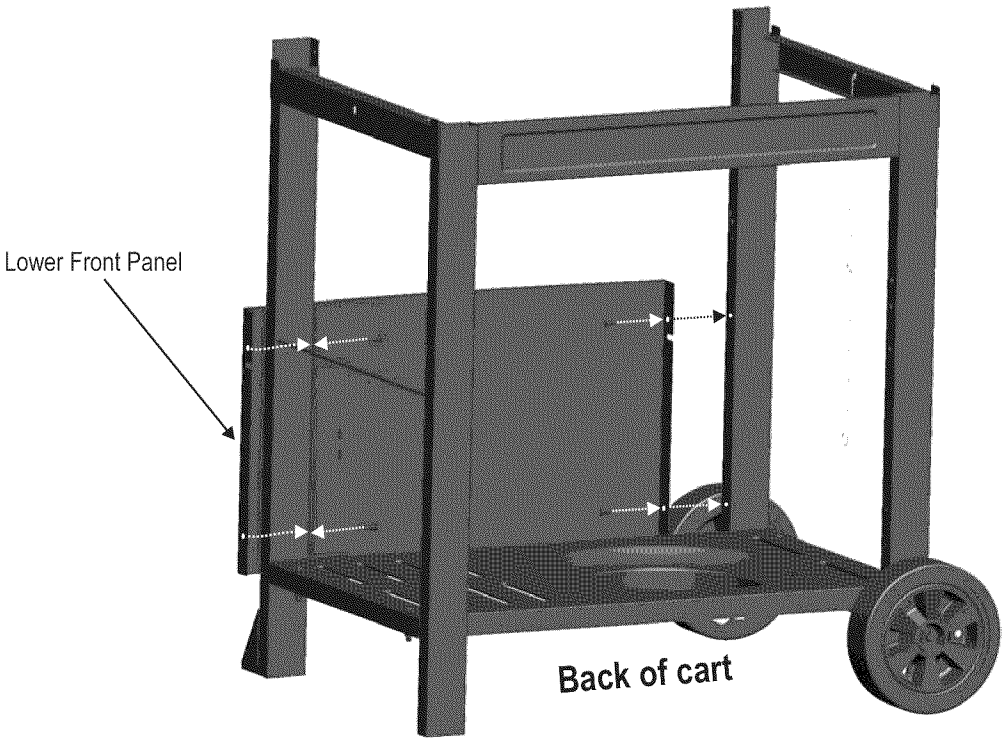

4 Upper Front Panels

- ☐ Attach upper brace to top of cart with (4) **#8x3/8" self-tap screws**.
- ☐ Attach handle to upper front panel with (2) **#10-24 flange nuts**.
- ☐ Attach upper front panel assembly to cart with (2) **shoulder screws**.

#8x3/8"
self-tap screws
Qty. 4

#10-24
Flange Nuts
Qty. 2

shoulder screws
Qty. 2

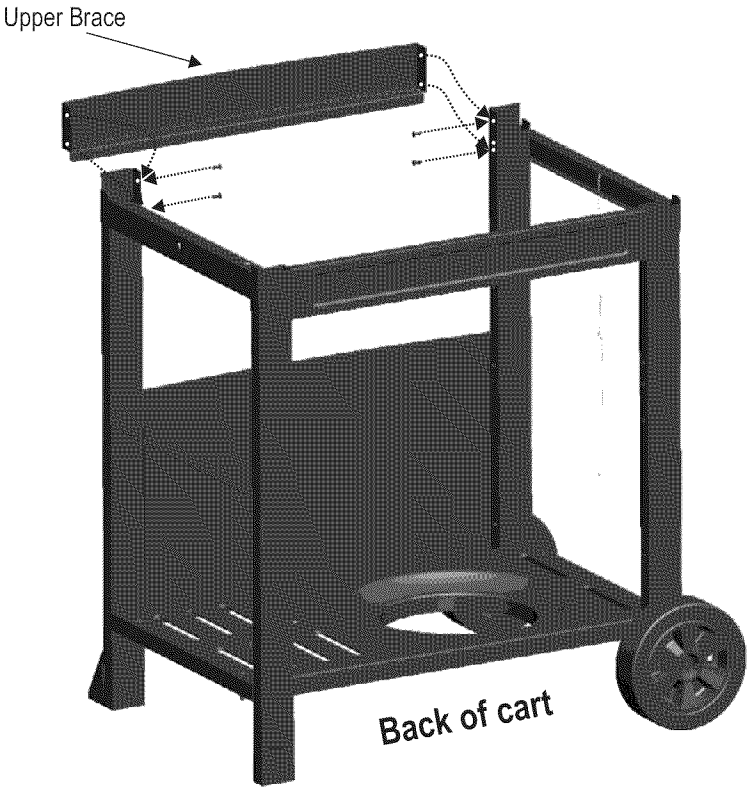

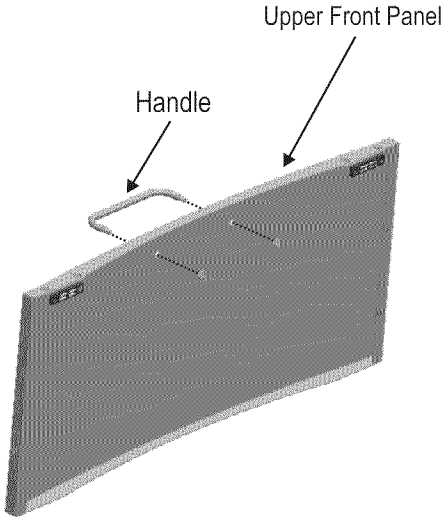

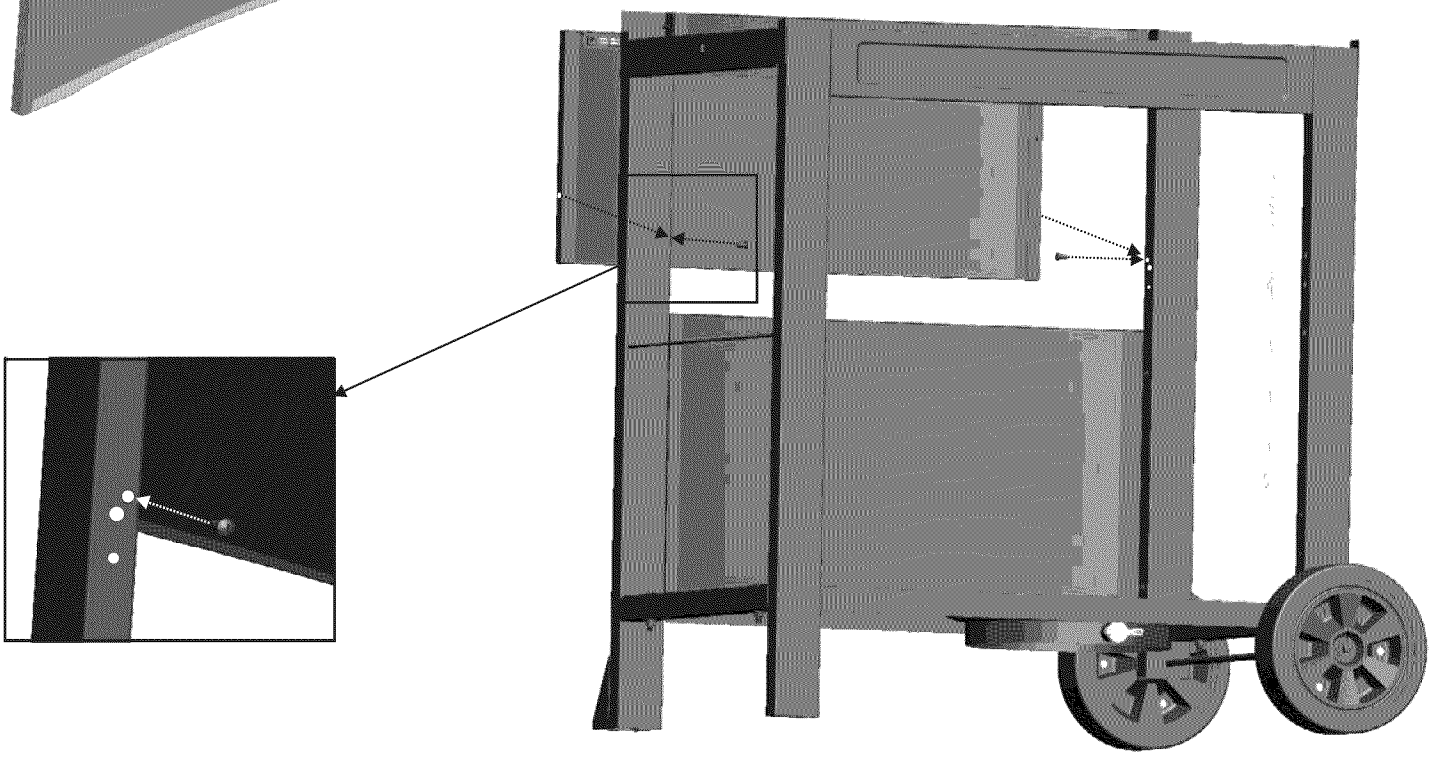

5 Grill Head to Cart

- ☐ Stand cart upright.
- ☐ This step requires two people to lift and position grill head onto cart.
- ☐ Carefully lower the grill head onto the cart. Make sure the regulator hose is hanging outside the cart. Attach with (4) **1/4-20x1/2" screws, 7mm lock washers** and **7mm flat washers.**

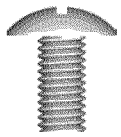

1/4-20x1/2" screws
Qty. 4

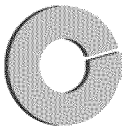

7mm lock washers
Qty. 4

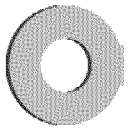

7mm flat washers
Qty. 4

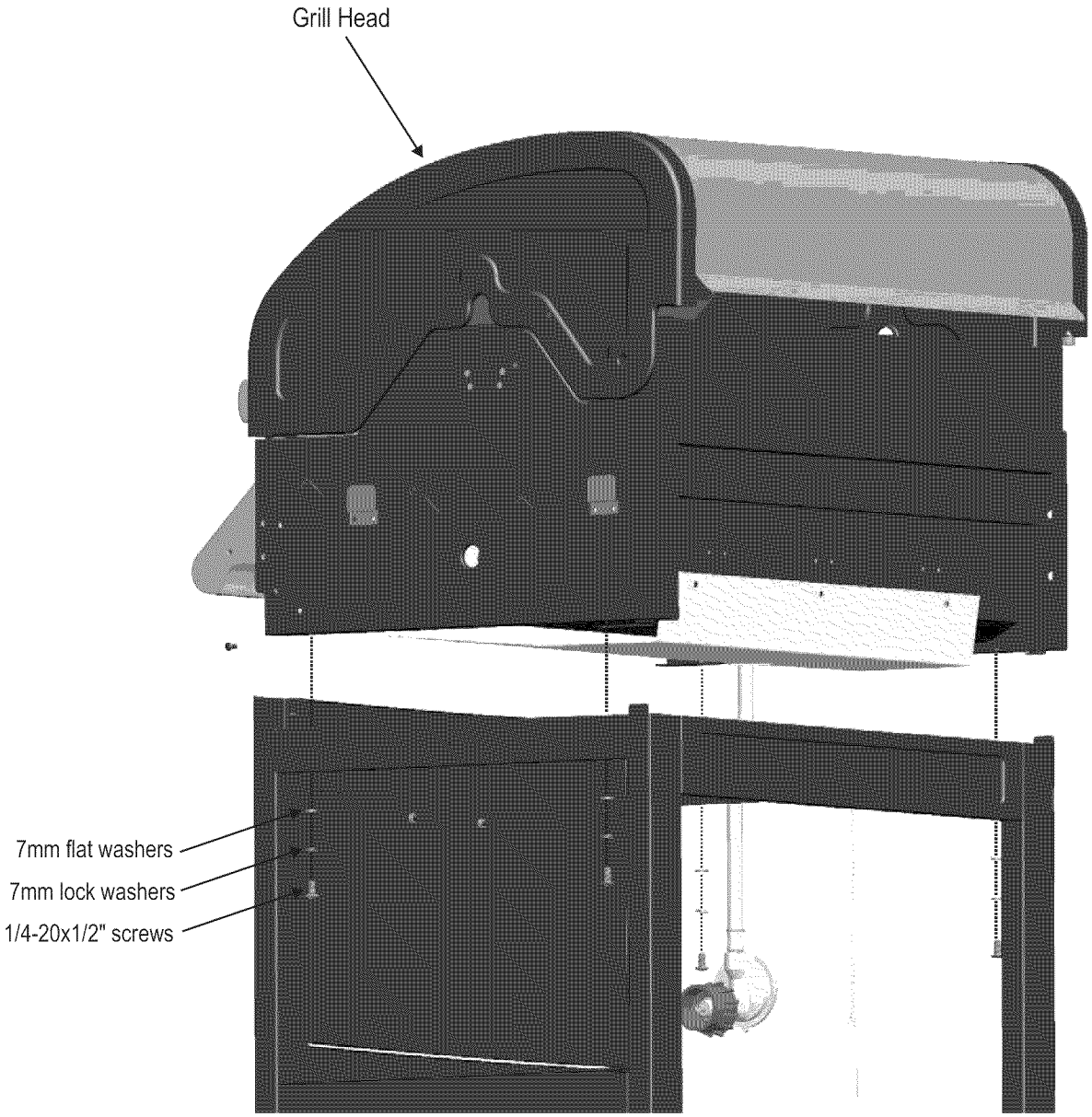

6

Right Side Shelf

- ☐ Attach tool hook to right fascia with (2) **#8-3/8" self-tap screws (A)**. Hook side wall of shelf over support brackets on side of firebox **(A)**.
- ☐ Insert (2) **7mm fiber washers** and **1/4-20x1/2" screws** through inside front of firebox and (2) through outside back of firebox as shown **(B).**
- ☐ Attach (4) **1/4-20 flange nuts** to screw tips to secure right side shelf to firebox **(C).**

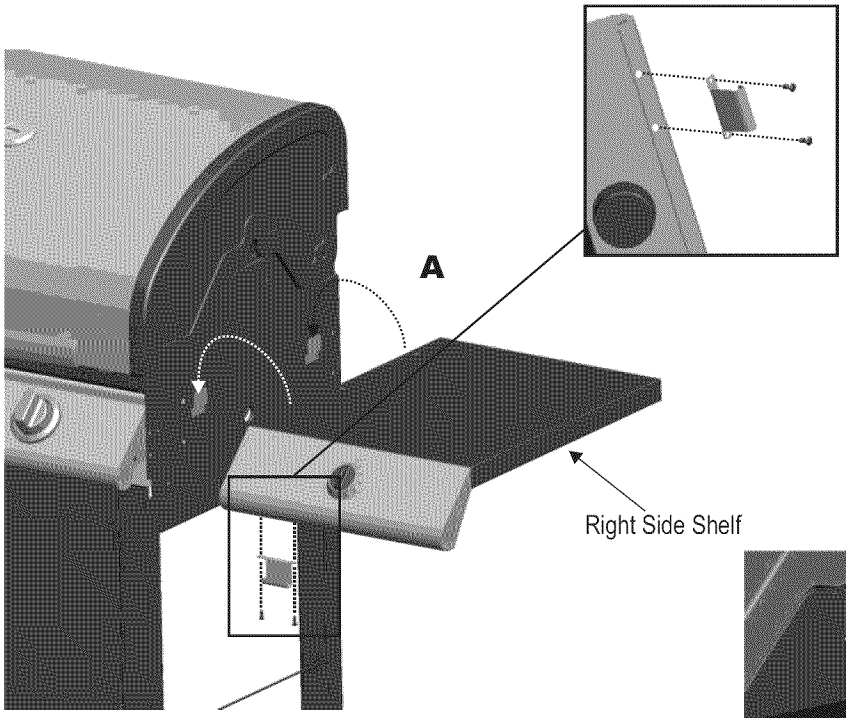

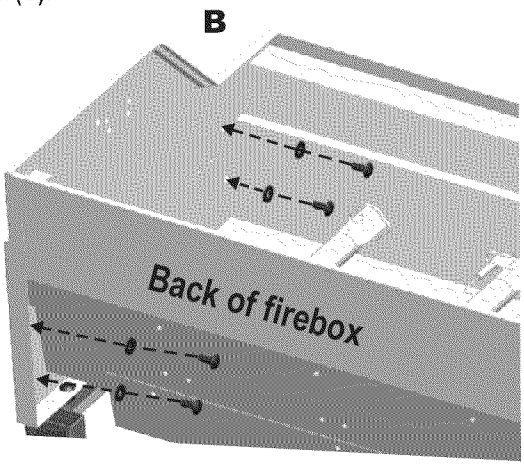

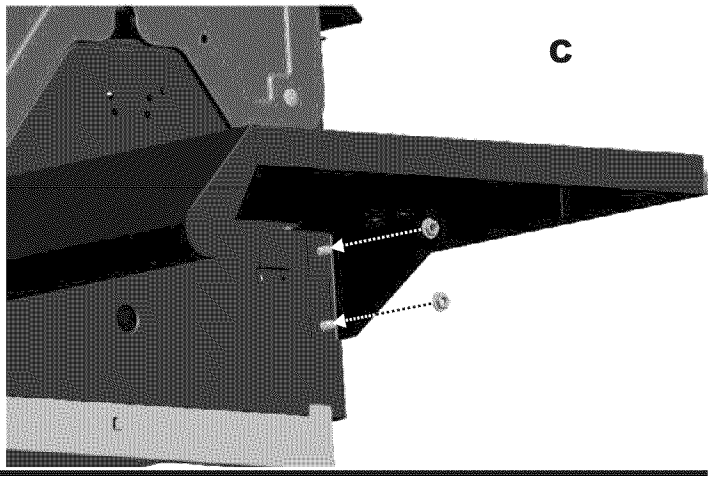

#8x3/8"
self-tap screws
Qty. 2

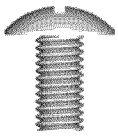

1/4-20x1/2"
screws
Qty: 4

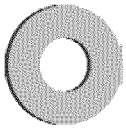

7mm
Fiber Washer
Qty: 4

1/4-20
Flange Nut
Qty: 4

7

Fascia Right Side Shelf

- ☐ Attach fascia and side shelf to firebox with (2) **#8x3/8" self-tap screws**.
- ☐ CAUTION: Fascia must be securely tightened to firebox to safely move grill.

#8x3/8"
self-tap screws
Qty. 2

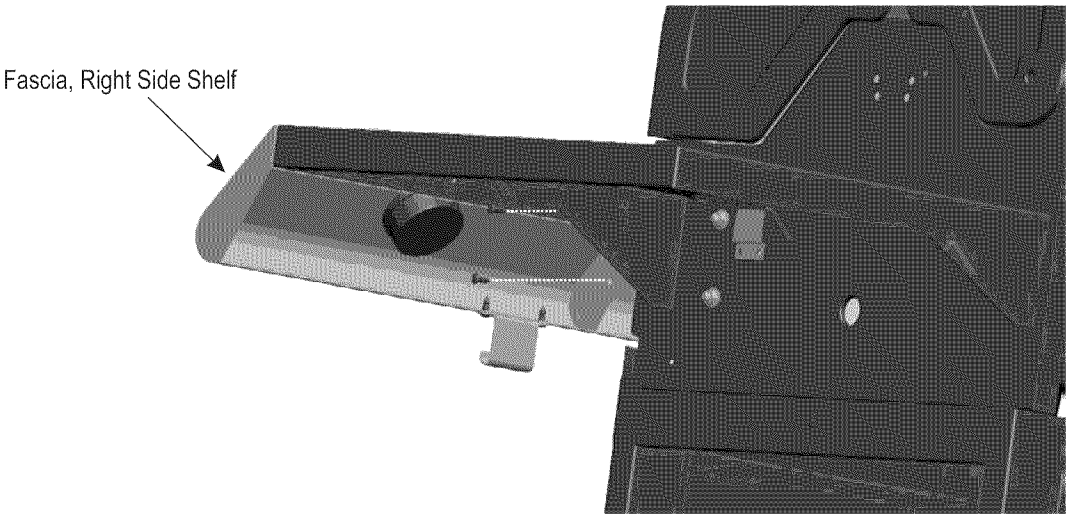

8

Side Burner Shelf

- ☐ Hook side wall of side burner shelf over support brackets on side of firebox **(A).**
- ☐ Inside firebox insert **fiber washers** and **1/4-20x1/2" screws** as shown **(B).**
- ☐ Attach (4) **1/4-20 flange nuts** to screw tips to secure side burner shelf to firebox **(C).**

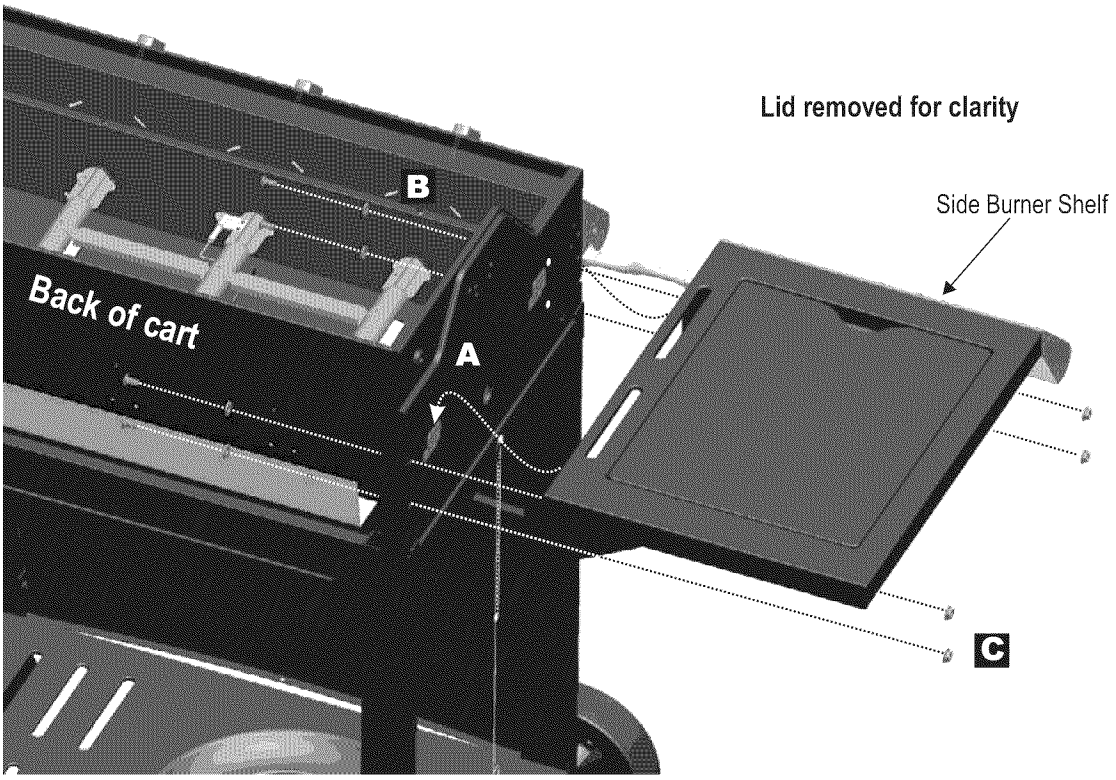

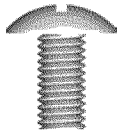

1/4-20x1/2" screws
Qty. 4

7mm Fiber Washer
Qty. 4

1/4-20
Flange Nuts
Qty. 4

9

Left Fascia

- ☐ Attach fascia to firebox with (2) **#8x3/8" self-tap screws**.
- ☐ CAUTION: Fascia must be securely tightened to firebox to safely move grill.

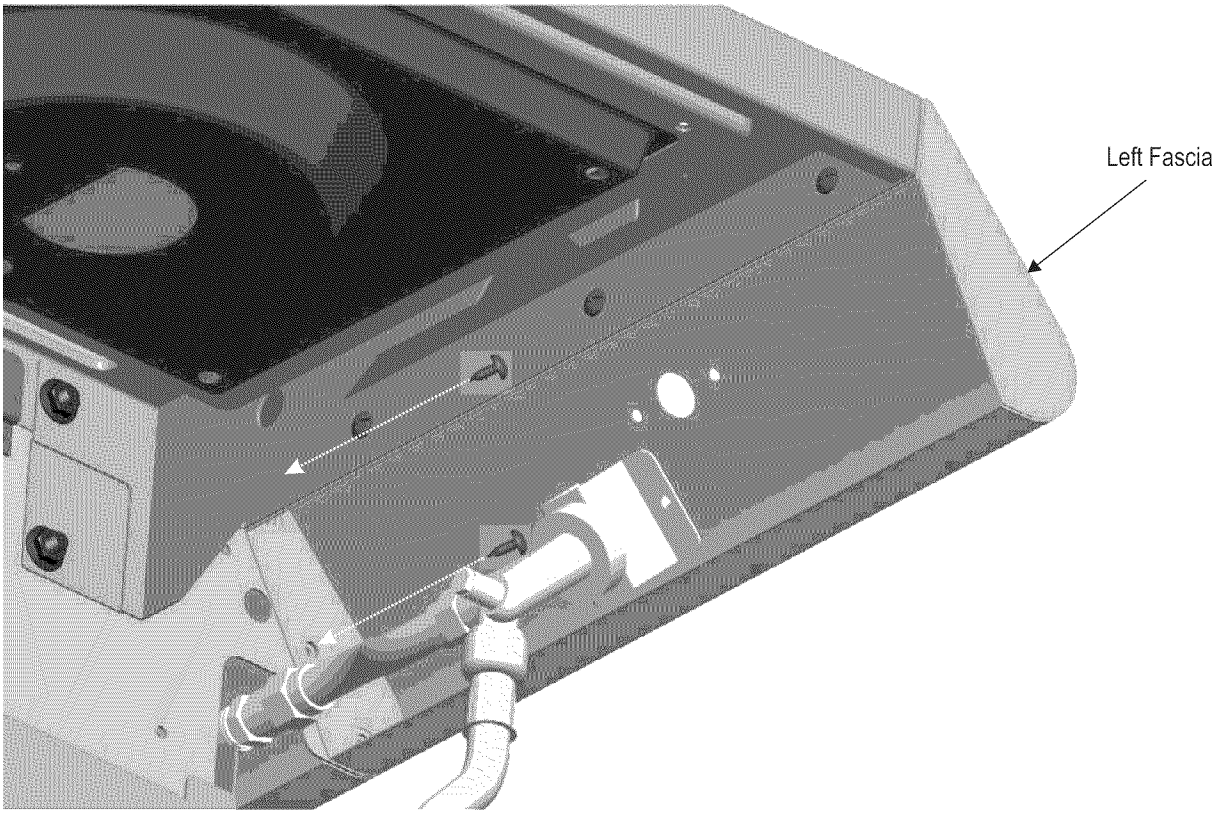

#8x3/8"
self-tap screws
Qty. 2

10

Sideburner Valve, Sideburner, Sideburner Bezel, Ignitor Wire, Control Knob

- ☐ Position valve behind fascia and line up holes.
- ☐ Insert (1) of the #8-32x3/8" stainless steel screws, but do not fully tighten.
- ☐ Slip bezel under inserted screw and position as shown **(A).**
- ☐ Line up other hole and insert screw #8-32x3/8" through bezel and into valve.
- ☐ Tighten both securely.
- ☐ Place sideburner into shelf **(B).** Make sure valve is inside sideburner tube. Attach sideburner with (1) **wing nut (C).** Under sideburner shelf, install sideburner clip to sideburner tube and valve. Attach sideburner ignitor wire to electrode as shown **(D).**
- ☐ Place grate onto sideburner shelf **(E).**
- ☐ Press control knob onto sideburner valve stem **(F).**

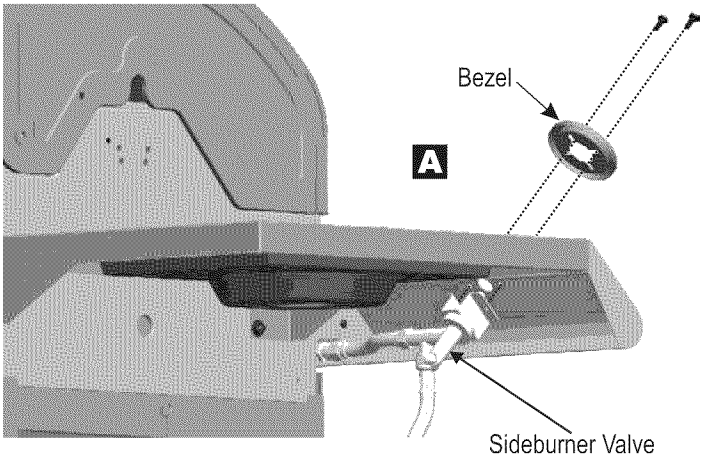

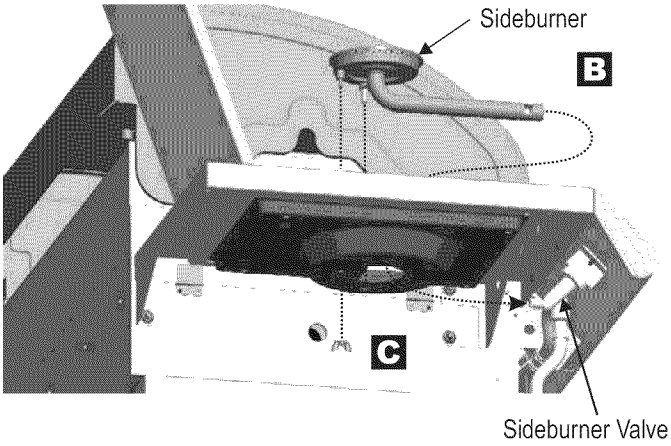

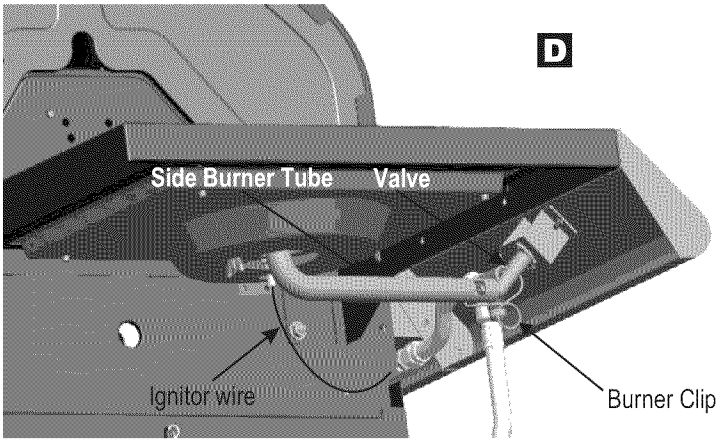

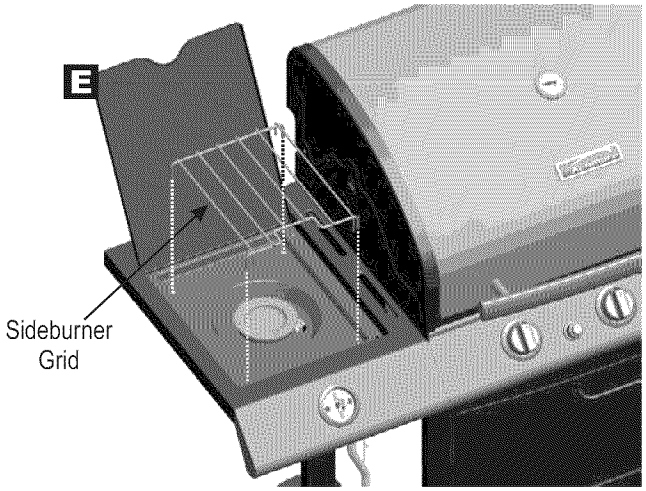

Correctly assembled burner-to-valve engagement

#8-32X3/8" SS Screw
Qty. 2

Wing Nut
Qty. 1

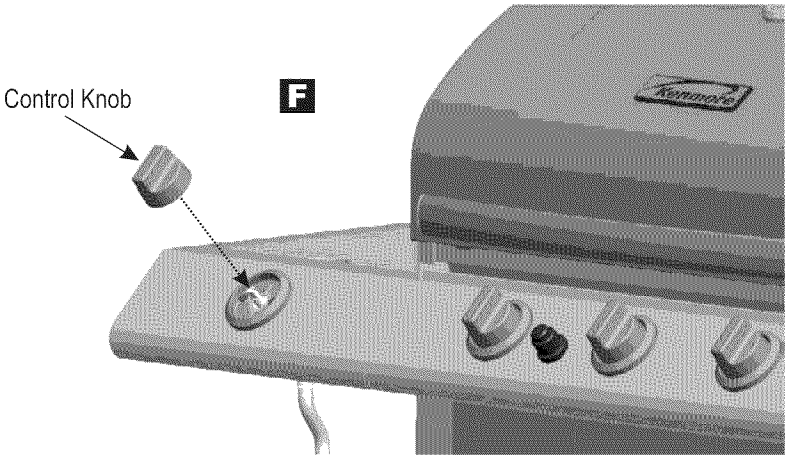

11 Heat Shield

☐ Attach heat shield to fire box with (2) **#8-3/8' self-tap screws.**

#8x3/8"
self-tap screws
Qty. 2

Lid removed for clarity

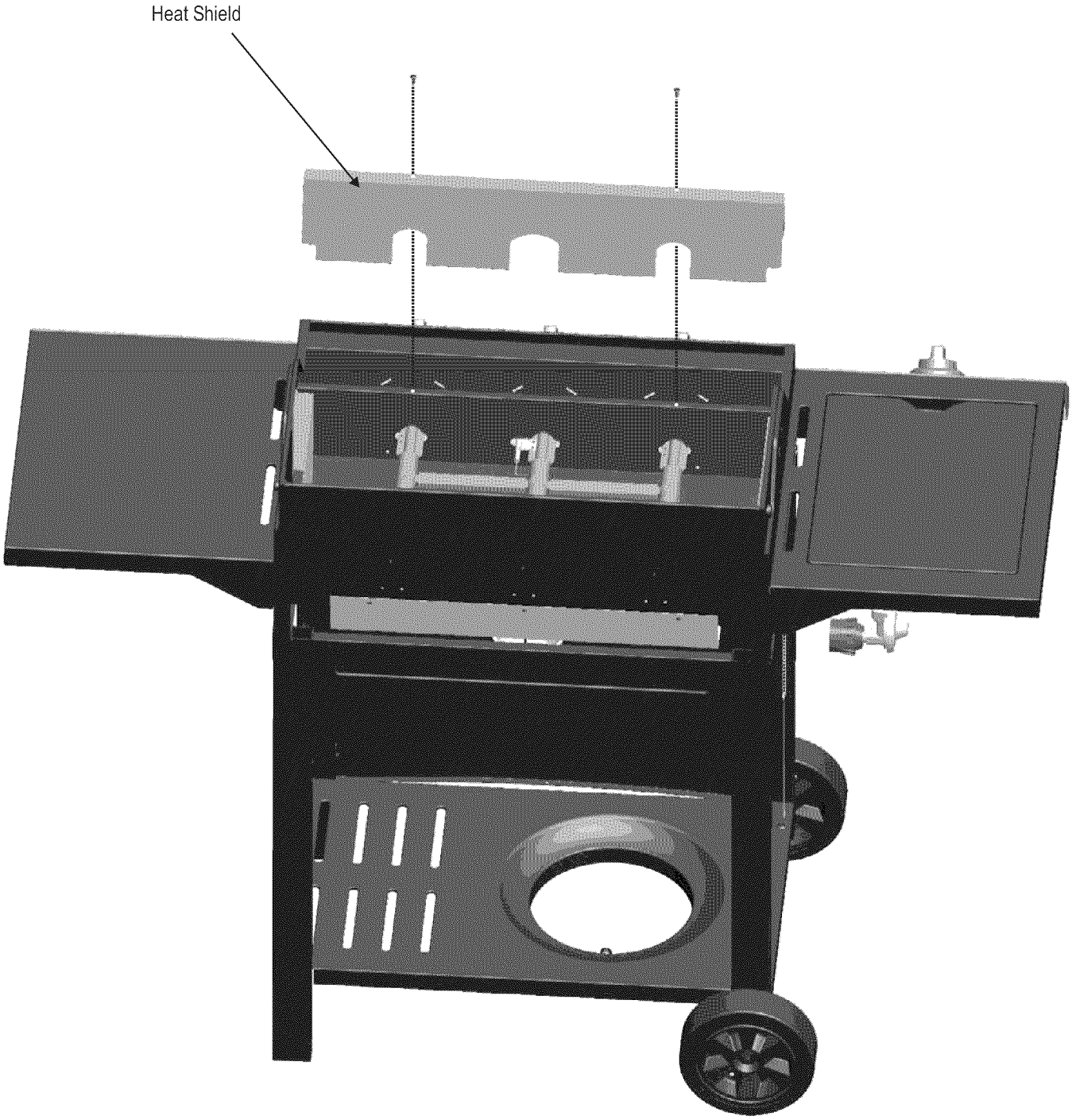

12 Heat Diffusers

☐ Place heat diffusers over burners by inserting tabs into slots in front of firebox. Opposite ends of heat diffusers rest on pins in back of firebox.

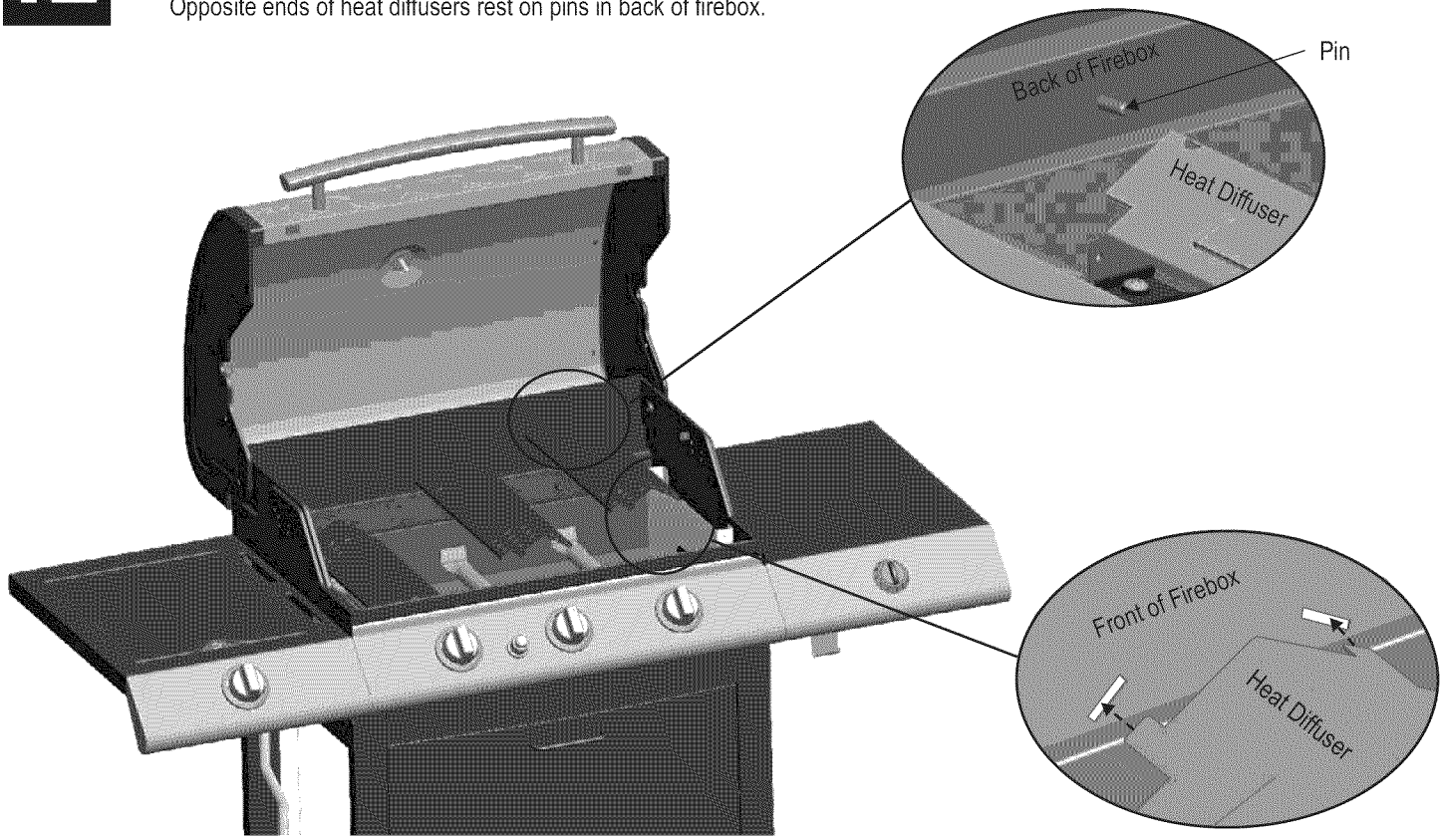

13 Cooking Grate and Swing Away

☐ Place cooking grates onto grate rests.

☐ Insert ends of Swing Away pivot wire into holes in sides of grill lid. Insert ends of Swing Away leg wire into holes in sides of firebox. NOTE: Pivot and leg wires, running side-to-side, should be under wires running front-to-back. If pivot and leg wires are on top, Swing Away is installed upside-down.

☐ Unscrew ignitor cap and place AA battery into ignitor slot with positive end (+) facing outward. Screw ignitor cap onto ignitor.

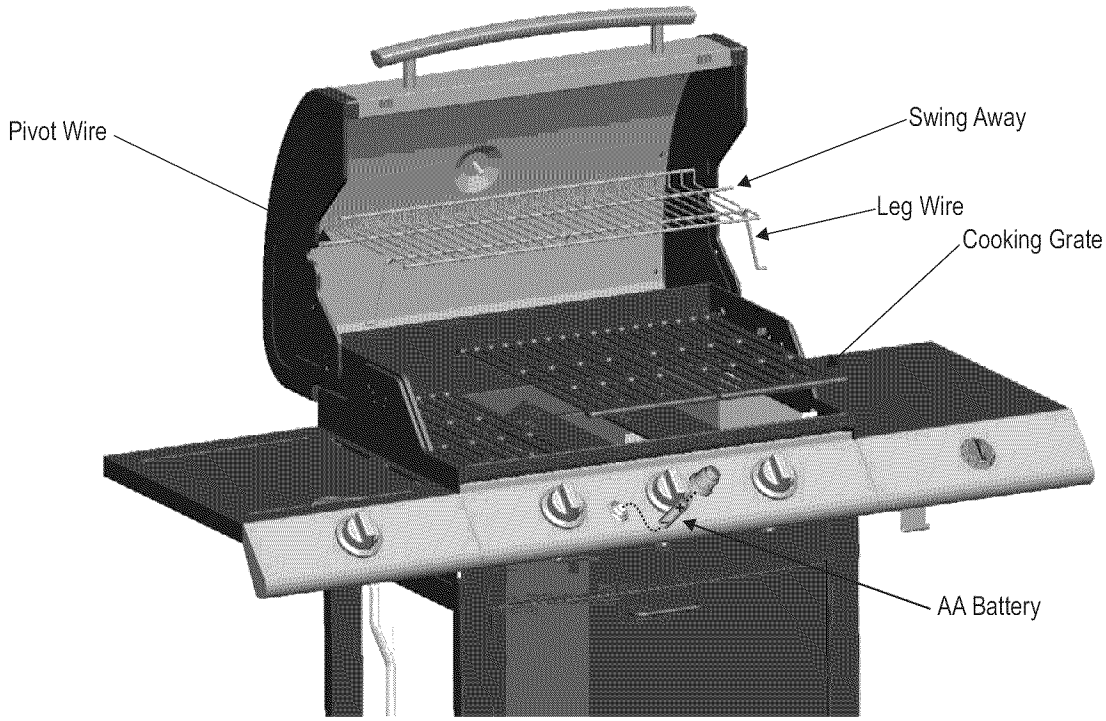

14

Grate Lifter, Storage Tray and Lid

☐ Hang Grate Lifter onto tool hook.
☐ When using Storage Tray and Lid, place on right side shelf. When not using, store indoors.

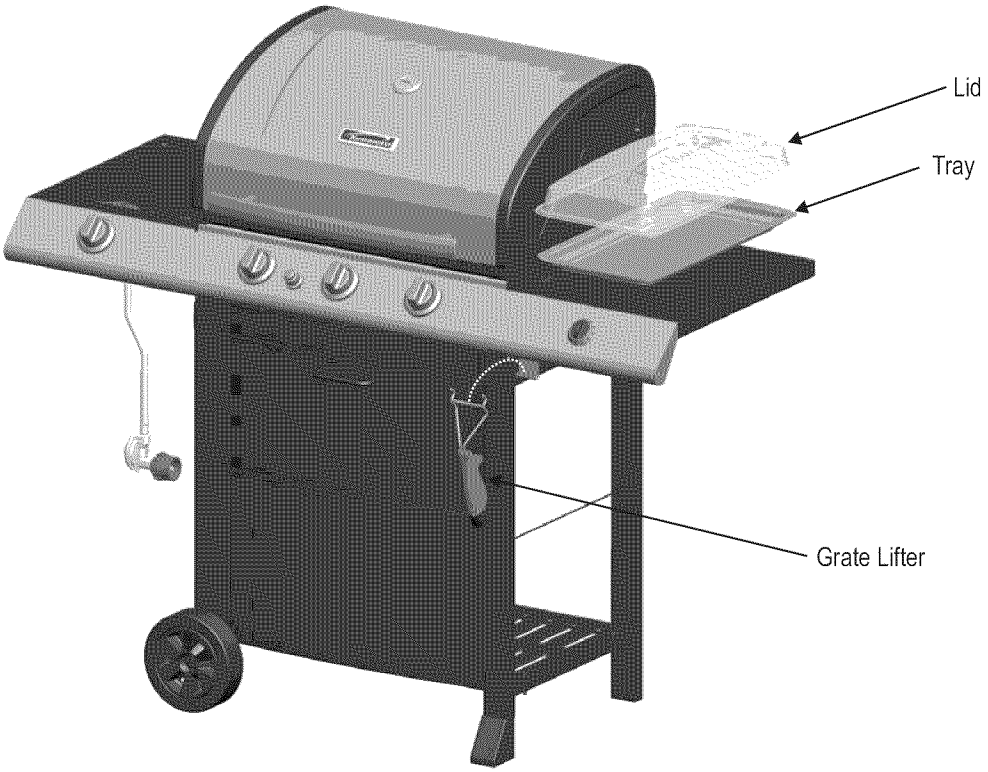

15

Tool Basket

☐ Hook tool basket into front panel.

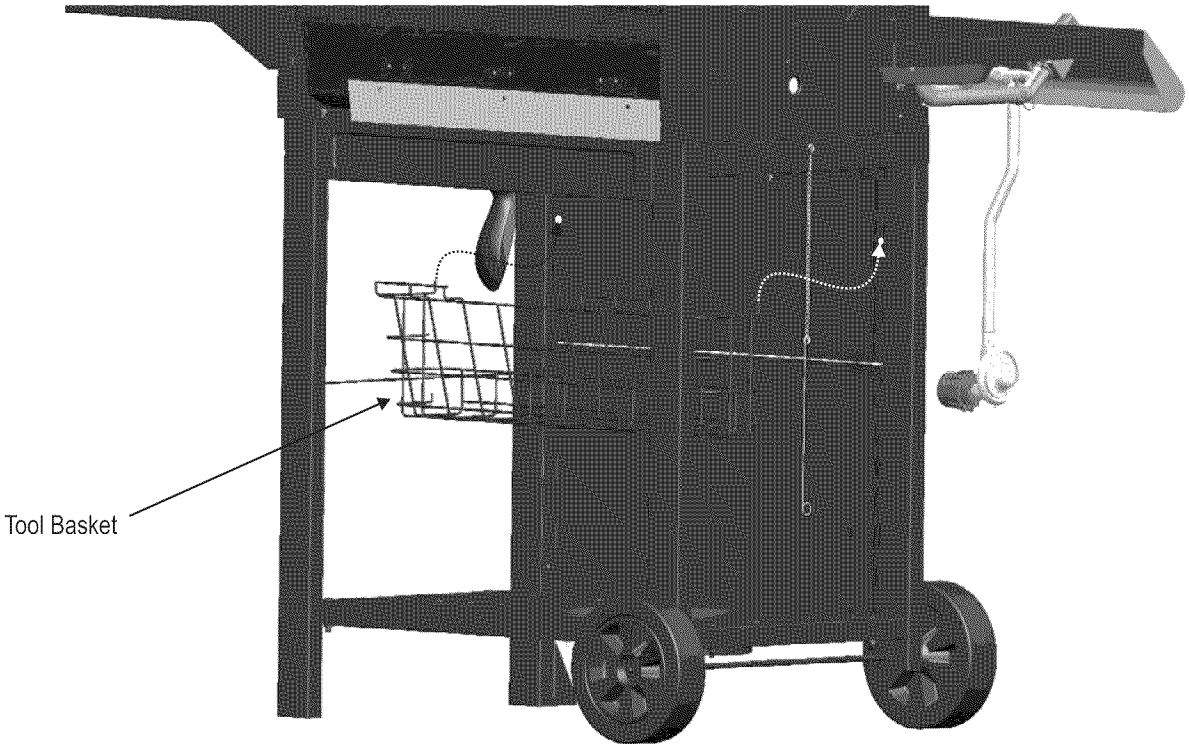

16

Grease Cup Clip and Grease Cup

☐ Hang grease cup clip from bottom of firebox and place grease cup into grease cup clip.

CAUTION

Failure to install grease cup clip and cup will cause hot grease to drip from bottom of grill with risk of fire or property damage.

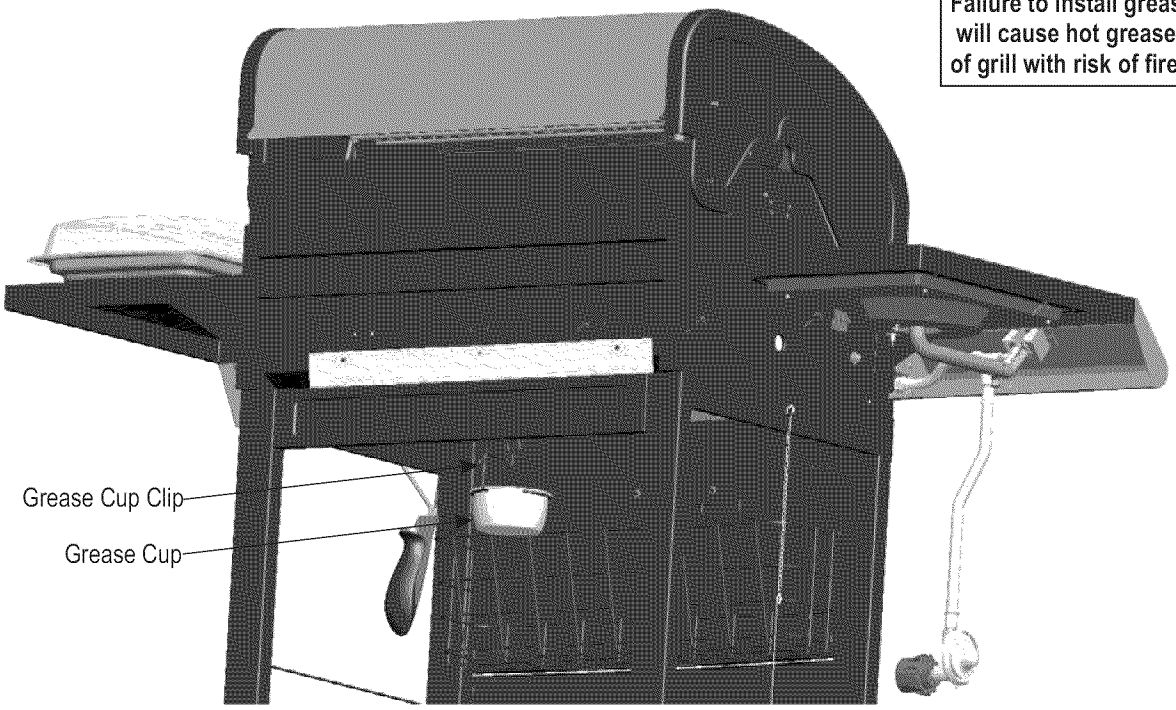

17

LP Tank

☐ LP tank is sold separately. Use only with an OPD (over-fill protection device) equipped LP tank. Fill and leak check before attaching to grill and regulator.

☐ Place LP tank into hole in bottom shelf with tank collar opening facing to side as shown. Finger tighten tank thumbscrew to hold LP tank securely in place.

See Use and Care section to correctly Leak Test and perform the Burner Flame Check.

CAUTION

- **Failure to install tank correctly may allow gas hose to be damaged in operation, resulting in the risk of fire.**

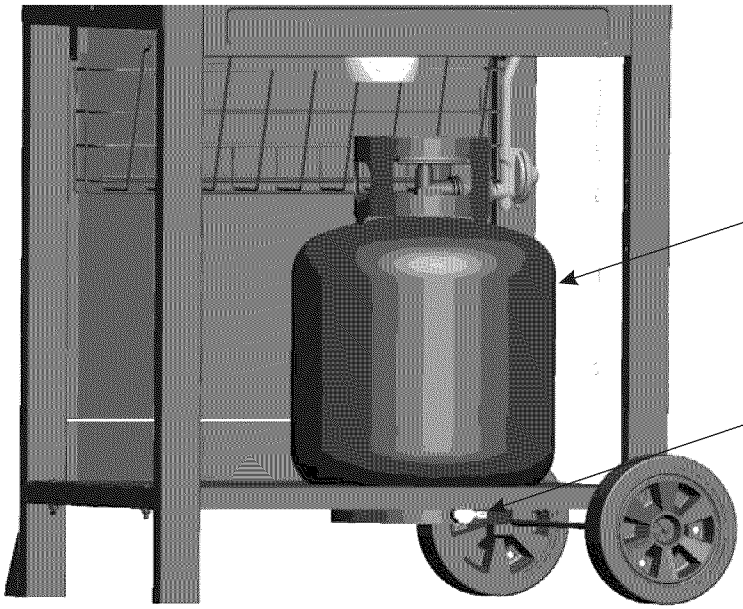

EMERGENCIES: If a gas leak cannot be stopped, or a fire occurs due to gas leakage, call the fire department.

Emergencies	Possible Cause	Prevention/Solution
Gas leaking from cracked/cut/burned hose.	•Damaged hose.	•Turn off gas at LP cylinder or at source on natural gas systems. If anything but burned, replace valve/hose/regulator. If burned, discontinue use of product until a plumber has investigated cause and corrections are made.
Gas leaking from LP cylinder.	•Mechanical failure due to rusting or mishandling.	•Replace LP cylinder.
Gas leaking from LP cylinder valve.	• Failure of cylinder valve from mishandling or mechanical failure.	• Turn off LP cylinder valve. Return LP cylinder to gas supplier.
Gas leaking between LP cylinder and regulator connection.	•Improper installation, connection not tight, failure of rubber seal.	•Turn off LP cylinder valve. Remove regulator from cylinder and visually inspect rubber seal for damage. See LP Cylinder Leak Test and Connecting Regulator to the LP Cylinder.
Fire coming through control panel.	• Fire in burner tube section of burner due to blockage.	•Turn off control knobs and LP cylinder valve. Leave lid open to allow flames to die down. After fire is out and grill is cold, remove burner and inspect for spider nests or rust. See Natural Hazard and Cleaning the Burner Assembly pages.
Grease fire or continuous excessive flames above cooking surface.	• Too much grease buildup in burner area.	• Turn off control knobs and LP cylinder valve. Leave lid open to allow flames to die down. After cooling, clean food particles and excess grease from inside firebox area, grease tray, and other surfaces.

Troubleshooting

Problem	Possible Cause	Prevention/Solution
Burner(s) will not light using ignitor. (See Electronic Ignition Troubleshooting also) *Continued on next page.*	**GAS ISSUES:**	
	• Trying to light wrong burner.	• See instructions on control panel and in Use and Care section.
	• Burner not engaged with control valve.	• Make sure valves are positioned inside of burner tubes.
	• Obstruction in burner.	• Ensure burner tubes are not obstructed with spider webs or other matter. See cleaning section of Use and Care.
	• No gas flow.	• Make sure LP cylinder is not empty. If LP cylinder is not empty, refer to "Sudden drop in gas flow."
	• Vapor lock at coupling nut to LP cylinder.	• Turn off knobs and disconnect coupling nut from LP cylinder. Reconnect and retry.
	• Coupling nut and LP cylinder valve not fully connected.	• Turn the coupling nut approximately one-half to three-quarters additional turn until solid stop. Tighten by hand only - do not use tools.
	ELECTRICAL ISSUES:	
	•Electrode cracked or broken; sparks at crack.	• Replace electrode(s).
	•Electrode tip not in proper position.	Main Burners: • Tip of electrode should be pointing toward gas port opening on burner. The distance should be 1/8" to 1/4". Adjust if necessary. Sideburner: • Tip of electrode should be pointing toward gas port opening on burner. the distance should be 1/8" to 3/16". Adjust if necessary.
	•Wire and/or electrode covered with cooking residue.	•Clean wire and/or electrode with rubbing alcohol and clean swab.
	•Wires are loose or disconnected.	•Reconnect wires or replace electrode/wire assembly.
	•Wires are shorting (sparking) between ignitor and electrode.	•Replace ignitor wire/electrode assembly.
	•Dead battery.	•Replace with a new AA-size alkaline battery.

REV00

Troubleshooting (*continued*)

Problem	Possible Cause	Prevention/Solution
Burner(s) will not light using ignitor. (See Electronic Ignition Troubleshooting also)	**ELECTRONIC IGNITION:** •No spark, no ignition noise. •No spark, some ignition noise. •Sparks, but not at electrode or at full strength.	• See Section I of Electronic Ignition System. • See Section II of Electronic Ignition System. • See Section III of Electronic Ignition System.
Burner(s) will not match light.	•See **"GAS ISSUES:"** on previous page. •Match will not reach. •Improper method of match-lighting.	•Use long-stem match (fireplace match). •See "Match-Lighting" section of Use and Care.
Sudden drop in gas flow or low flame.	•Out of gas. •Excess flow valve tripped. •Vapor lock at coupling nut/LP cylinder connection.	•Check for gas in LP cylinder. •Turn off knobs, wait 30 seconds and light grill. If flames are still low, turn off knobs and LP cylinder valve. Disconnect regulator. Reconnect regulator and leak-test. Turn on LP cylinder valve, wait 30 seconds and then light grill. •Turn off knobs and LP cylinder valve. Disconnect coupling nut from cylinder. Reconnect and retry.
Flames blow out.	•High or gusting winds. •Low on LP gas. •Excess flow valve tripped.	•Turn front of grill to face wind or increase flame height. •Refill LP cylinder. •Refer to "Sudden drop in gas flow" above.
Flare-up.	•Grease buildup. •Excessive fat in meat. •Excessive cooking temperature.	•Clean burners and inside of grill/firebox. •Trim fat from meat before grilling. •Adjust (lower) temperature accordingly.
Persistent grease fire.	•Grease trapped by food buildup around burner system.	•Turn knobs to OFF. Turn gas off at LP cylinder. Leave lid in position and let fire burn out. After grill cools, remove and clean all parts.
Flashback... (fire in burner tube(s)).	•Burner and/or burner tubes are blocked.	•Turn knobs to OFF. Clean burner and/or burner tubes. See burner cleaning section of Use and Care.
Unable to fill LP cylinder.	•Some dealers have older fill nozzles with worn threads.	•The worn nozzles don't have enough "bite" to engage the valve. Try a second LP dealer.
One burner does not light from other burner(s).	•Grease buildup or food particles in end(s) of carryover tube(s).	•Clean carry-over tube(s) with wire brush.

Troubleshooting - Electronic Ignition

Problem (Ignition)	Possible Cause	Check Procedure	Prevention/Solution
SECTION I No sparks appear at any electrodes when control knob turned to ⚡ ; no noise can be heard from spark module.	•Battery not installed properly.	•Check battery orientation.	•Install battery (make sure that "+" and "–" connectors are oriented correctly, with "+" end up and "–" end down.)
	•Dead battery.	•Has battery been used previously?	•Replace battery with new AA-size alkaline battery.
	•Button assembly not installed properly.	•Check to insure threads are properly engaged. Button should travel up and down without binding.	•Unscrew button cap assembly and reinstall, making sure threads are aligned and engaged fully.
	•Faulty spark module.	•If no sparks are generated with new battery and good wire connections, module is faulty.	•Replace spark module assembly.
SECTION II No sparks appear at any electrodes when control knob turned to ⚡ ; noise can be heard from spark module.	•Output lead connections not connected.	•Are output connections on and tight?	•Remove and reconnect all output connections at module and electrodes.
SECTION III Sparks are present but not at all electrodes and/or not at full strength	•Output lead connections not connected.	•Are output connections on and tight?	•Remove and reconnect all output connections at module and electrodes.
	•Electrical arc between output wires and grill frame.	•If possible, observe grill in dark location. Operate ignition system and look for arcing between output wires and grill frame.	•If sparks are observed other than from burner(s), wire insulation may be damaged. Replace wires.
	•Weak battery.	•All sparks present but weak or at slow rate.	•Replace battery with a new AA-size alkaline battery.
	•Electrodes are wet.	•Has moisture accumulated on electrode and/or in burner ports?	•Use paper towel to remove moisture.
	•Electrodes cracked or broken; sparks at electrode cracks.	•Inspect electrodes for cracks.	•Replace cracked or broken electrodes.

NOTES

NOTES

NOTES

Get it fixed, at your home or ours!

Your Home

For expert troubleshooting and home solutions advice:

manage my home

www.managemyhome.com

For repair – **in your home** – of **all** major brand appliances, lawn and garden equipment, or heating and cooling systems,

no matter who made it, no matter who sold it!

For the replacement parts, accessories and owner's manuals that you need to do-it-yourself.

For Sears professional installation of home appliances and items like garage door openers and water heaters.

1-800-4-MY-HOME® **(1-800-469-4663)**

Call anytime, day or night (U.S.A. and Canada)

www.sears.com **www.sears.ca**

Our Home

For repair of carry-in items like vacuums, lawn equipment, And electronics, call anytime for the location of your nearest **Sears Parts & Repair Service Center**

1-800-488-1222 (U.S.A) **1-800-469-4663** (Canada)

www.sears.com **www.sears.ca**

To purchase a protection agreement on a product serviced by Sears:

1-800-827-6655 (U.S.A.) **1-800-361-6665** (Canada)

Para pedir servicio de reparación a domicilio, y para ordenar piezas:

1-888-SU-HOGAR®

(1-888-784-6427)

Au Canada pour service en français:

1-800-LE-FOYERMC

(1-800-533-6937)

www.sears.ca

Sears

® Registered Trademark / ™ Trademark / SM Service Mark of Sears Brands, LLC
® Marca Registrada / ™ Marca de Fábrica / SM Marca de Servicio de Sears Brands, LLC
MC Marque de commerce / MD Marque déposée de Sears Brands, LLC

© Sears Brands, LLC