HONDA

Owner's Manual

TILLER

FC600

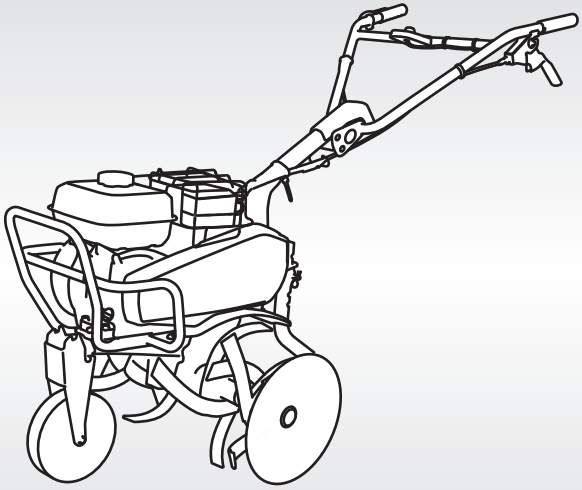

© 2022 Honda Motor Co., Ltd. -All Rights Reserved

⚠ WARNING: ⚠

The engine exhaust from this product contains chemicals known to the State of California to cause cancer, birth defects or other reproductive harm.

Keep this owner's manual handy, so you can refer to it any time. This owner's manual is considered a permanent part of the tiller and should remain with the tiller if resold.

The information and specifications included in this publication were in effect at the time of approval for printing. Honda Motor Co., Ltd. reserves the right, however, to discontinue or change specifications or design at any time without notice and without incurring any obligation whatsoever.

INTRODUCTION

Congratulations on your selection of a Honda tiller. We are certain you will be pleased with your purchase of one of the finest tillers on the market.

We want to help you get the best results from your new tiller and to operate it safely. This manual contains all the information on how to do that; please read it carefully.

As you read this manual, you will find information preceded by a NOTICE symbol. That information is intended to help you avoid damage to your tiller, other property, or the environment.

We suggest you read the warranty policy to fully understand its coverage and your responsibilities of ownership. The warranty policy is a separate document that should have been given to you by your dealer.

When your tiller needs scheduled maintenance, keep in mind that your Honda servicing dealer is specially trained in servicing Honda tillers and is supported by the parts and service divisions of American Honda. Your Honda servicing dealer is dedicated to your satisfaction and will be pleased to answer your questions and concerns.

INTRODUCTION

A FEW WORDS ABOUT SAFETY

Your safety and the safety of others are very important. And using this tiller safely is an important responsibility.

To help you make informed decisions about safety, we have provided operating procedures and other information on labels and in this manual. This information alerts you to potential hazards that could hurt you or others.

Of course, it is not practical or possible to warn you about all the hazards associated with operating or maintaining a tiller. You must use your own good judgment.

You will find important safety information in a variety of forms, including:

- **Safety Labels** — on the tiller.
- **Safety Messages** — preceded by a safety alert symbol ⚠ and one of three signal words: DANGER, WARNING, or CAUTION.

These signal words mean:

⚠ DANGER	You WILL be KILLED or SERIOUSLY HURT if you don't follow instructions.
⚠ WARNING	You CAN be KILLED or SERIOUSLY HURT if you don't follow instructions.
⚠ CAUTION	You CAN be HURT if you don't follow instructions.

- **Safety Headings** — such as *IMPORTANT SAFETY INFORMATION*.
- **Safety Chapter** — such as *TILLER SAFETY*.
- **Instructions** — how to use this tiller correctly and safely.

This entire book is filled with important safety information — please read it carefully.

CONTENTS

TILLER SAFETY 5
IMPORTANT SAFETY INFORMATION 5
SAFETY LABEL LOCATIONS 9

CONTROLS 10
COMPONENT & CONTROL LOCATIONS 10
CONTROLS 11
Fuel Valve 11
Choke Lever 11
Engine Switch 12
Starter Grip 12
Throttle Lever 12
Handlebar Height Adjuster 13
Clutch Lever 13
Drag Bar 13
Front Wheel 14
Hitch Box 14

BEFORE OPERATION 15
ARE YOU READY TO GET STARTED? 15
IS YOUR TILLER READY TO GO? 15
Check the Engine 16
Check the Tiller 16

OPERATION 17
SAFE OPERATING PRECAUTIONS 17
STARTING THE ENGINE 18
OPERATING THE CONTROLS FOR TILLING 21
ROTARY TINES INSPECTION AND REPLACEMENT 24
HANDLING TIPS 30
STOPPING THE ENGINE 31

SERVICING YOUR TILLER 33
THE IMPORTANCE OF MAINTENANCE 33
MAINTENANCE SAFETY 34
MAINTENANCE SCHEDULE 35
REFUELING 36
FUEL RECOMMENDATIONS 37
ENGINE OIL LEVEL CHECK 38
ENGINE OIL CHANGE 39
ENGINE OIL RECOMMENDATIONS 40
TRANSMISSION OIL LEVEL CHECK 41

CONTENTS

SERVICING YOUR TILLER (continued)
AIR FILTER INSPECTION....42
AIR FILTER CLEANING....42
SPARK PLUG SERVICE....44
CLUTCH CABLE ADJUSTMENT....46
THROTTLE CABLE ADJUSTMENT....46
DRIVE BELT ADJUSTMENT....47
SEDIMENT CUP CLEANING....49
SPARK ARRESTER SERVICE (optional equipment)....50

STORAGE....51
STORAGE PREPARATION....51
Cleaning....51
Fuel....52
Engine Oil....56
Engine Cylinder....56
STORAGE PRECAUTIONS....57
REMOVAL FROM STORAGE....57

TRANSPORTING....58
BEFORE LOADING....58
LOADING AND UNLOADING....58

TAKING CARE OF UNEXPECTED PROBLEMS....59
ENGINE WILL NOT START....59
ENGINE LACKS POWER....60
POOR TILLING QUALITY....60

TECHNICAL INFORMATION....61
Serial Number Locations....61
Carburetor Modifications for High Altitude Operation....62
Emission Control System Information....63
Emission Control System Warranty....66
Specifications....67

CONSUMER INFORMATION....68
Dealer Locator Information....68
Honda Publications....68
Customer Service Information....69

QUICK REFERENCE INFORMATION....Inside back cover

TILLER SAFETY

IMPORTANT SAFETY INFORMATION

Honda tillers are designed to cultivate earth outdoors. Other uses can result in injury to the operator or damage to the tiller and other property.

Most injuries or property damage can be prevented if you follow all instructions in this manual and on the tiller. The most common hazards are discussed below, along with the best way to protect yourself and others.

Operator Responsibility

- You must be alert and in good physical condition to operate the tiller. Do not operate the tiller if you are tired, ill, or under the influence of alcohol, medication, or any substance that might impair your vision, dexterity, or judgment.
- Know how to stop the tiller quickly in case of emergency.
- Understand the use of all tiller controls.
- Keep a firm hold on the handlebars. They may tend to lift during clutch engagement.
- Be sure the drag bar is in place and properly adjusted.
- Be sure that anyone who operates the tiller receives proper instruction. Do not let children operate the tiller. Keep children and pets away from the area of operation.
- Before starting the engine, check that the tiller is not damaged and is in good condition.

Carbon Monoxide Hazard

Your tiller's exhaust contains poisonous carbon monoxide gas, which you cannot see or smell.
Breathing carbon monoxide can KILL YOU IN MINUTES.
For your safety:

- Do not start or operate the engine in any closed or partially enclosed area, such as a garage.
- Never run the tiller in a closed or even partially closed area where people or pets may be present.
- Never operate the tiller near open doors, windows, or vents.
- Get fresh air and seek medical attention immediately if you suspect you have inhaled carbon monoxide.

Early symptoms of carbon monoxide exposure include headache, fatigue, shortness of breath, nausea, and dizziness. Continued exposure to carbon monoxide can cause loss of muscular coordination, loss of consciousness, and then death.

TILLER SAFETY

Fire and Burn Hazards

- The exhaust system gets hot enough to ignite some materials.
  - Keep the tiller at least 3 feet (1 meter) away from buildings and other equipment during operation.
  - Keep flammable materials away from the tiller.
- The muffler becomes very hot during operation and remains hot for a while after stopping the engine. Be careful not to touch the muffler while it is hot. Let the engine cool before storing the tiller indoors.

Refuel With Care

Gasoline is extremely flammable, and gasoline vapor can explode.
Never remove the gas cap or add gasoline with the engine running.
Allow the engine to cool if it has been in operation.
Refuel only outdoors in a well-ventilated area and on a level surface.
Never fill containers inside a vehicle or on a truck or trailer bed with a plastic liner.
Never smoke near gasoline, and keep other flames and sparks away.
Do not overfill the fuel tank.
Make sure that any spilled fuel has been wiped up and cleaned before starting the engine.
Always store gasoline in an approved container.

Avoid Rotating Tines

Rotating tines can cause serious cuts and even amputate body parts. Keep away from the tine area whenever the engine is running. If you need to work around the tines to clear object accumulation or for any other reason, always shut off the engine. After striking a foreign object, stop the engine, remove the spark plug cap, thoroughly inspect the machine for any damage, and repair the damage before restarting and operating the machine.
Wear heavy-duty gloves when you need to clean the tine area or handle the tines.

Clear Tilling Area

Never attempt to make any adjustments while the engine is running.
A tine can throw rocks and other objects with enough force to cause serious injury. Before starting the engine, carefully inspect the area and remove all stones, sticks, bones, nails, pieces of wire, and other foreign objects. If children get close to the operation area, stop the tiller and shut off the engine. Never operate the tines over gravel.

Keep Shields in Place

Guards and shields are designed to protect you from being hit by thrown objects and to keep you from touching hot engine parts and moving components. For your safety and the safety of others, keep all shields in place when the engine is running.

Wear Protective Clothing

Wearing protective clothing will reduce your risk of injury.
Do not wear loose clothing, jewelry, short pants, sandals, or go barefoot.
Wear gloves, eye protection, a long-sleeved shirt, and long pants made of heavy material. Keep clothing fastened.
Wear sturdy work boots with good toe protection and nonslip soles.

Turn Engine Off When Not Operating the Tiller

If you need to leave the tiller for any reason, even just to inspect the area ahead, always turn the engine off.

Slope Operation

- When tilling on slopes, keep the fuel tank less than half full to minimize fuel spillage.
- Till across the slope (at equally spaced intervals) rather than up and down it.
- Be very careful when changing the direction of the tiller on a slope.
- Do not use the tiller on a slope of more than 10°. Before starting the engine, check that the tiller is not damaged and is in good condition. For your safety and the safety of others, exercise extreme care when using the tiller on a slope.

Tilling Conditions

Operate tiller only in daylight or good artificial light. Do not operate the tiller at night or under poor light conditions.
Never operate the machine at high transport speeds on hard or slippery surfaces.

Attachments and Modifications

Do not make any modifications to your tiller. Modifying your tiller or installing non-Honda attachments can make your tiller unsafe.
If you need attachments for your tiller, use only Honda Genuine attachments (see page 68). These products have been designed for your tiller.
Non-Honda attachments are usually designed for universal applications. Although aftermarket attachments may fit on your tiller, they may not meet factory specifications and could make your tiller unsafe.

SAFETY LABEL LOCATIONS

These labels warn you of potential hazards that can cause serious injury. Read them carefully. If a label comes off or becomes hard to read, contact your servicing dealer for a replacement.

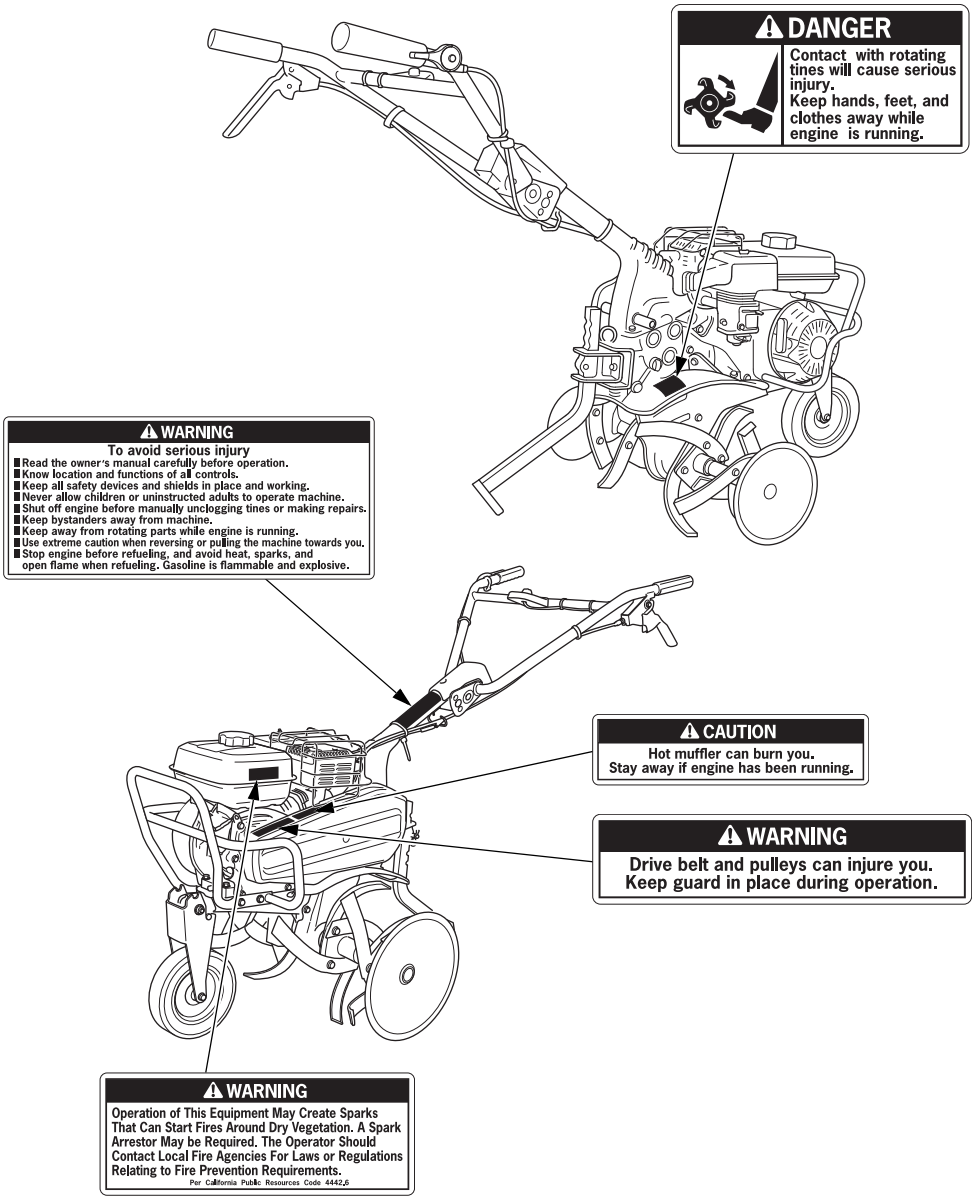

CONTROLS

COMPONENT & CONTROL LOCATIONS

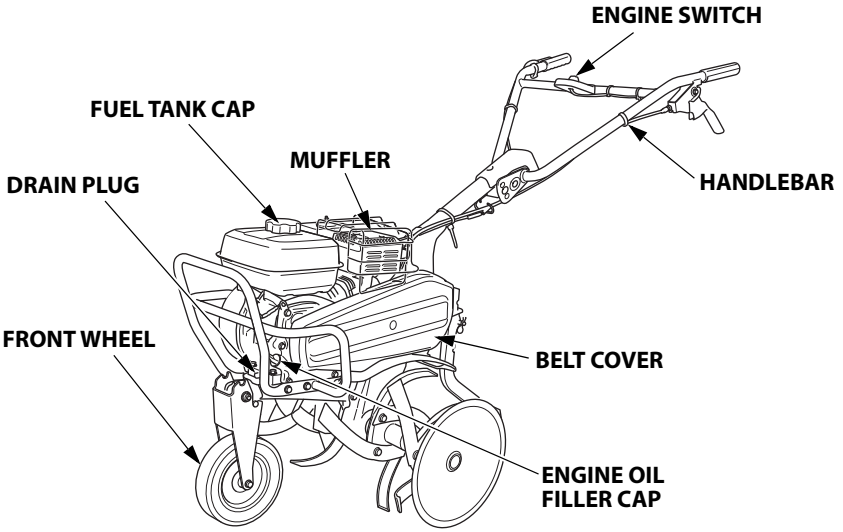

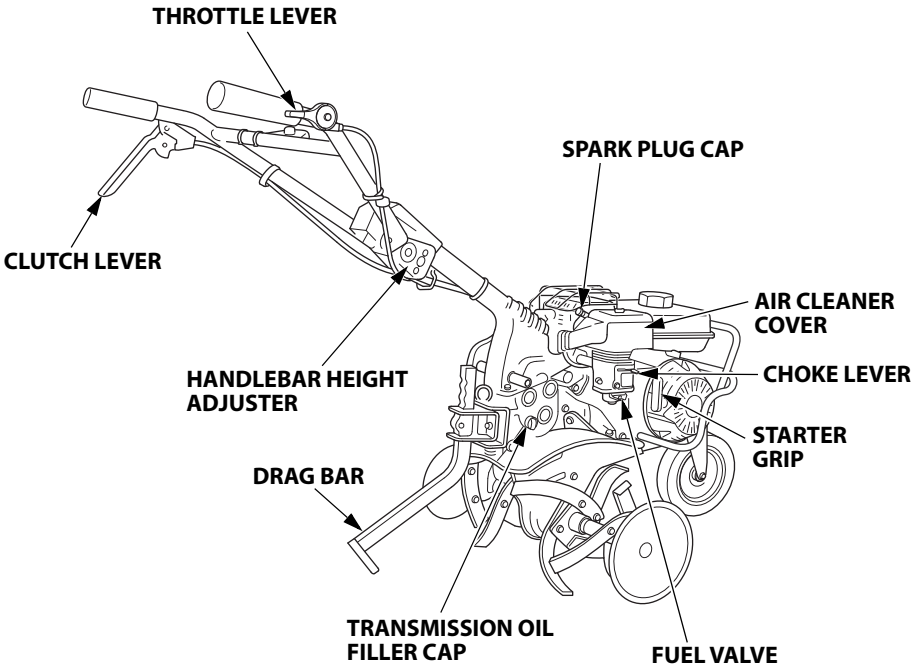

CONTROLS

Fuel Valve

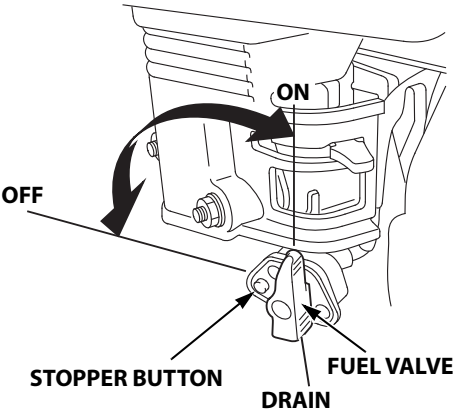

<For use in normal operation>
The fuel valve opens and closes the connection between the fuel tank and the carburetor.

The fuel valve must be in the ON position for the engine to run.

After stopping the engine, turn the fuel valve to the OFF position.

<For use in fuel drain>
Press the stopper button when draining the fuel out of the carburetor.

Turn the fuel valve to the DRAIN position while keeping the stopper button pressed.

After the gasoline drains completely, turn the fuel valve back to the OFF position so that it touches the stopper button.

Choke Lever

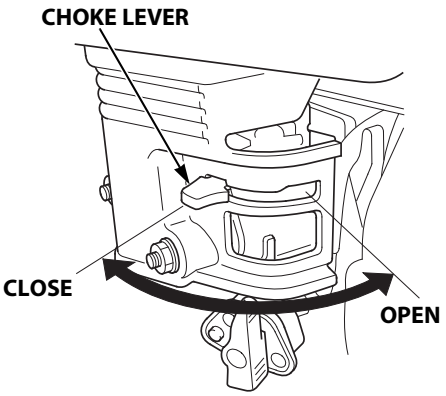

The choke lever opens and closes the choke valve in the carburetor.

The CLOSED position enriches the fuel mixture for starting a cold engine.

The OPEN position provides the correct fuel mixture for operation after starting and for restarting a warm engine.

Engine Switch

The engine switch controls the ignition system.

OFF — Stops the engine.
ON — Running position.

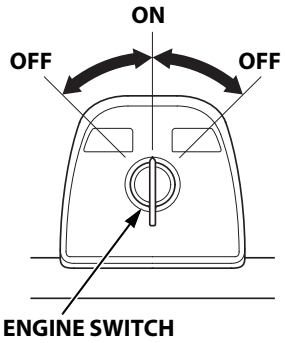

Starter Grip

Pulling the starter grip operates the recoil starter to crank the engine for starting.

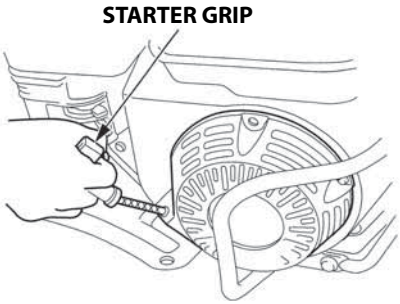

Throttle Lever

The throttle lever controls engine speed.

Moving the throttle lever in the directions shown makes the engine run faster or slower.

Tine speed is controlled by adjusting the throttle lever.
At maximum throttle position, the tines will rotate at the highest speed.
Moving the throttle lever toward the idle position will decrease the tine speed.

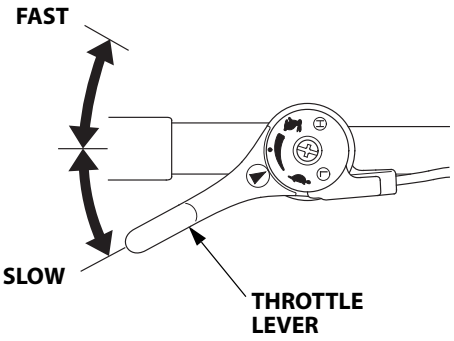

Handlebar Height Adjuster

Handlebar height can be adjusted to match operator height. For adjustment, see page 21.

For normal tilling, the most comfortable operator position is with the handlebars at waist height.

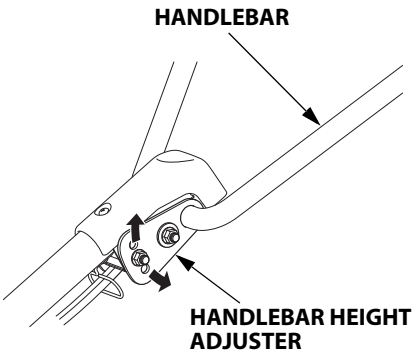

Clutch Lever

The clutch lever engages and disengages the transmission that drives the tines.
The tiller tines begin to rotate once the engine is started and the clutch lever is squeezed. The tines may momentarily rotate after clutch lever is released.

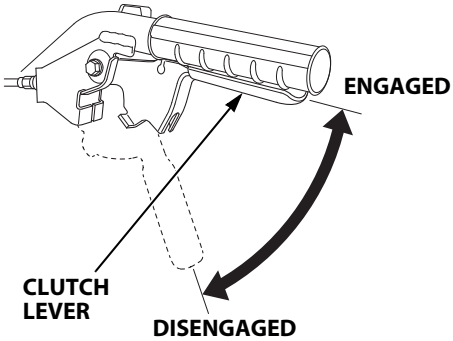

Drag Bar

The drag bar controls tilling depth and should always be used when tilling. It enables you to compensate for the hardness of the soil. Ideal drag bar height will depend on the type of soil being tilled and soil conditions at the time of tilling. In general, the drag bar should be adjusted so that the tiller is tilted slightly backward (see page 22).

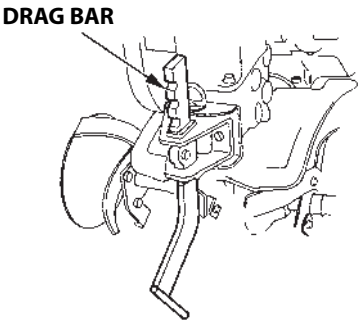

Front Wheel

The front wheel is used to help move the tiller from one place to another. Lift the tiller by the handlebars to roll the tiller on the front wheel. Return the wheel to the raised position before tilling. Always stop the engine before lowering or raising the wheel.

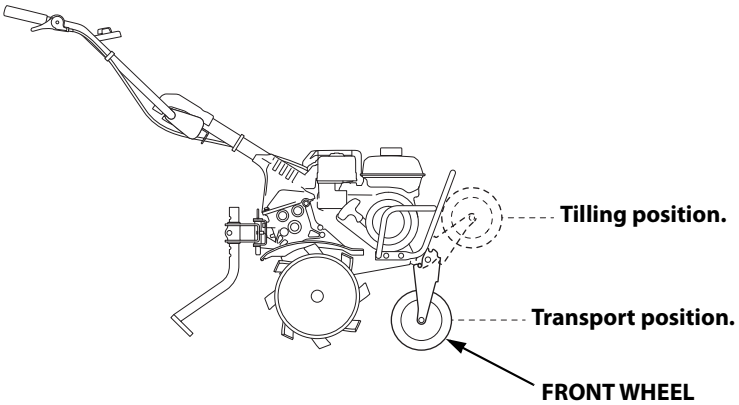

Hitch Box

Use a hitch pin as shown below to attach the drag bar or attachments to the hitch box.

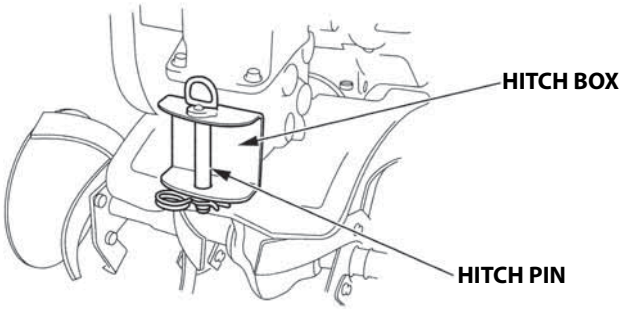

BEFORE OPERATION

ARE YOU READY TO GET STARTED?

Your safety is your responsibility. A little time spent in preparation will significantly reduce your risk of injury.

Knowledge

Read and understand this manual. Know what the controls do and how to operate them.

Familiarize yourself with the tiller and its operation before you begin using it. Know how to quickly disengage the controls and shut off the engine in case of an emergency.

IS YOUR TILLER READY TO GO?

For your safety, to ensure compliance with environmental regulations, and to maximize the service life of your equipment, it is very important to take a few moments before you operate the tiller to check its condition. Be sure to take care of any problem you find, or have your servicing dealer correct it, before you operate the tiller.

⚠ WARNING

Failure to properly maintain this tiller, or failing to correct a problem before operation, could result in a significant malfunction.

Some malfunctions can cause serious injuries or death.

Always perform a pre-operation inspection before each operation and correct any problems.

Do not place flammable objects close to the engine.

Before beginning your pre-operation checks, be sure the tiller is on a level surface and the engine switch is in the OFF position.

Check the Engine

- Before each use, look around and underneath the engine for signs of oil or gasoline leaks.
- Check the oil level (see page 38).
- Check the air filter (see page 42). A dirty air filter will restrict air flow to the carburetor, reducing engine and tiller performance.
- Check the fuel level (see page 36). Starting with a full tank will help to eliminate or reduce operating interruptions for refueling.
- Check the transmission oil (see page 41).

Check the Tiller

Tiller outside

Make sure that there are no flammable materials (dust, straw, etc.) near the engine.

Clutch lever function

Check that the lever operates smoothly.

Wiring and cables

- Check the insulation of each wire and cable for tears and cuts.
- Check if there is any wire or cable pinched by the neighboring parts.

Bolts and nuts tightens

Check for looseness in fastened parts. Securely tighten all loose parts.

Tines

Check for excessive wear, damage, or looseness.

Engine operation

- Start the engine. Check for abnormal sounds. (See pages 18 through 20 for starting procedure.)
- Check that the engine stops securely by operating the engine switch. (See page 31 through 32 for stopping procedure.)
- If you notice any other abnormal symptoms, consult with your authorized Honda dealer promptly.

OPERATION

SAFE OPERATING PRECAUTIONS

Before operating the tiller for the first time, please review both the *TILLER SAFETY* chapter and the chapter titled *BEFORE OPERATION*.

For your safety, do not start or operate the tiller in an enclosed area such as a garage. Your tiller's exhaust contains poisonous carbon monoxide gas that can collect rapidly in an enclosed area and cause illness or death.

⚠ WARNING

Exhaust contains poisonous carbon monoxide gas that can build up to dangerous levels in closed areas.

Breathing carbon monoxide can cause unconsciousness or death.

Never run this product's engine in a closed, or even partly closed area.

⚠ WARNING

Tines are sharp and spin fast.

Spinning tines can cut you severely and can amputate body parts.

- Wear protective footwear.
- Keep your hands and feet away from the tines while the engine is running.
- Stop the engine before performing any adjustment, inspection, or maintenance.

STARTING THE ENGINE

Refer to *Safe Operating Precautions* on page 17.

1. Turn the fuel valve to the ON position.

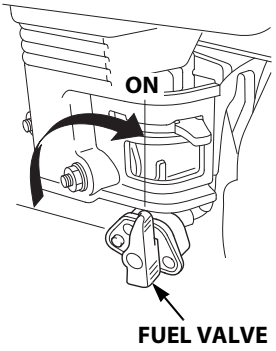

2. Release the clutch lever to the DISENGAGED position.

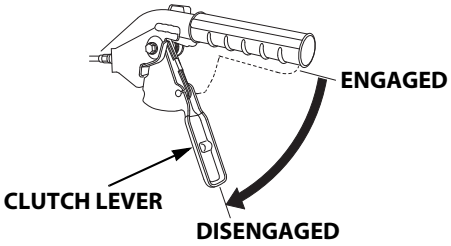

3. Turn the engine switch to the ON position.

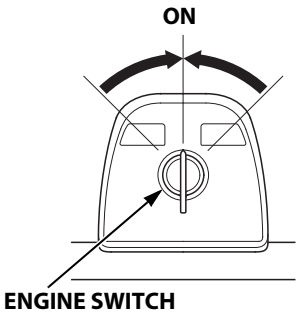

4. Move the choke lever to the CLOSED position to start a cold engine.

   Leave the choke lever in the OPEN position to restart a warm engine.

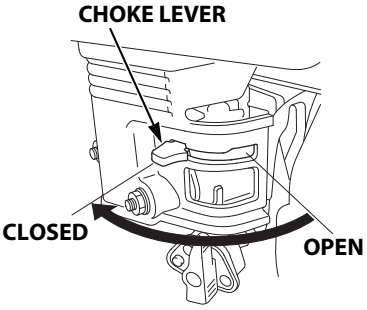

5. Align the mark "▲" on the throttle lever with the mark "●" (START position) as shown.

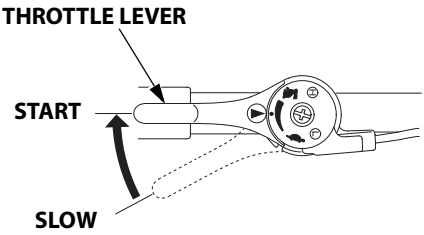

6. Hold the handle and pull the starter grip until you feel resistance, then pull briskly in the direction of the arrow as shown.

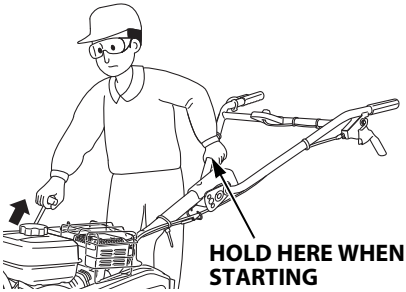

NOTICE

Do not allow the starter grip to snap back against the engine. Return it gently to prevent damage to the starter.

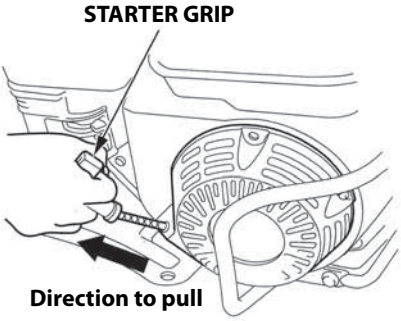

7. If the choke lever was moved to the CLOSED position to start the engine, gradually move it to the OPEN position as the engine warms up.

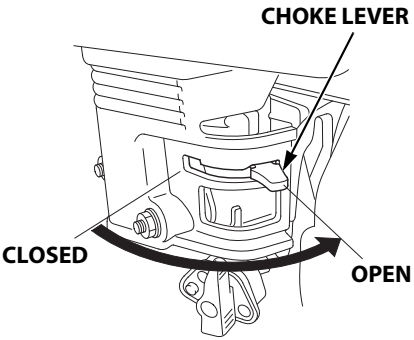

OPERATING THE CONTROLS FOR TILLING

If the tines dig in but the machine will not move forward, move the handlebars from side to side. When turning, push down on the handlebars to bring the tiller's weight to the rear; this will make turning easier.

Handlebar Height Adjustment

Stop the engine before adjusting the handlebar height.

To adjust the handlebar height:
1. Remove the 10 x 80 mm flange bolt.
2. Loosen the 10 x 85 mm flange bolt.
3. Reposition the handlebar.
4. Reinstall and tighten the 10 x 80 mm flange bolt.
5. Tighten the 10 x 85 mm flange bolt.

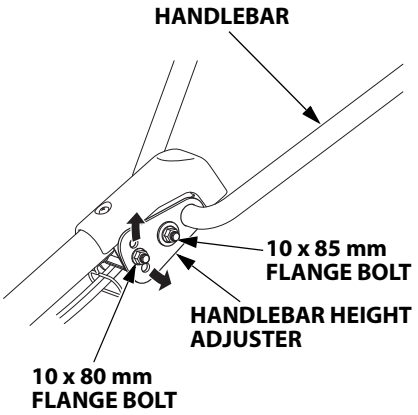

Clutch

When the clutch lever is squeezed, the clutch is engaged and power is transmitted to the transmission.

When the lever is released, the clutch is disengaged and power is not transmitted.

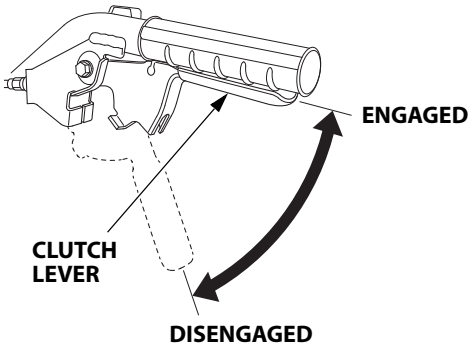

Tilling Depth Adjustment

The drag bar is used to control the tilling depth, which can be adjusted by removing the pin and lock pin and sliding the drag bar up and down as necessary.

During operation, if the machine jerks forward while tilling, press down on the handlebars. This will cause the drag bar to dig more deeply into the soil.

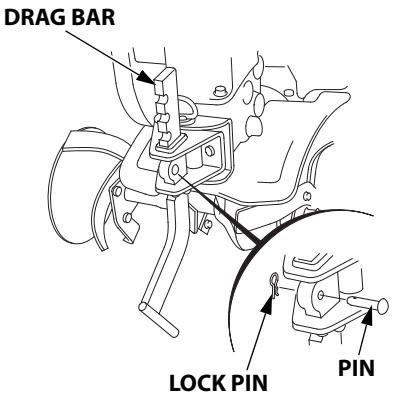

Front Wheel

After getting to the tilling site, move the front wheel to the raised position before tilling. Always stop the engine before lowering or raising the wheel.

To raise or lower the wheel, pull out the wheel assembly, move the wheel, and then release the wheel assembly.

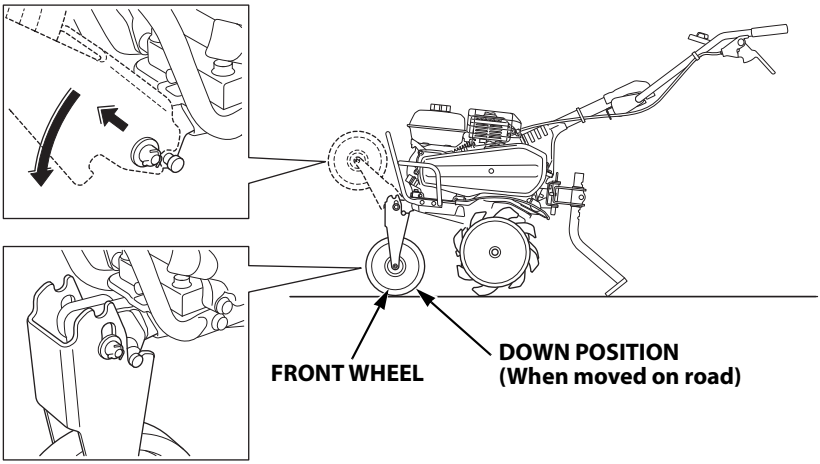

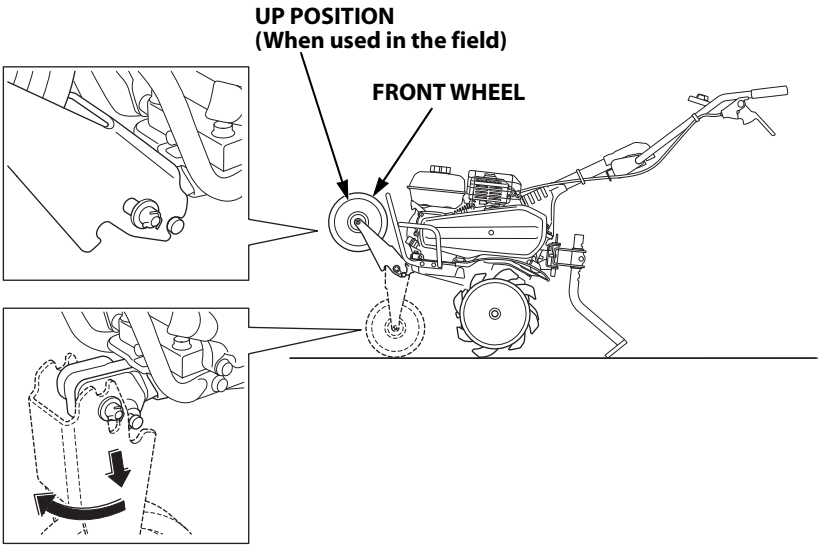

ROTARY TINES INSPECTION AND REPLACEMENT

⚠ WARNING

Tines are sharp.
Contact with the tines can cut or seriously hurt you.

- Wear heavy-duty gloves to protect your hands.
- Stop the engine before servicing.
- Disconnect the spark plug cap to prevent accidental start-up.

Before starting inspection or replacement work, set the front wheel to the DOWN position (see page 23) and place the tiller on firm level ground and secure it so it will not move.
Turn the fuel valve to the OFF position.

Inspection

1. Check for damage, bent, or loose tines. If any abnormality is found, tighten or replace the damaged part.

2. Check for damaged or missing rotary and retaining pins. If necessary, replace with new ones.

NOTICE

Use genuine Honda parts or equivalent when replacing the rotary tines. Otherwise, damage to the tiller may occur.

Rotaries position

- In case of 4 unit rotaries:

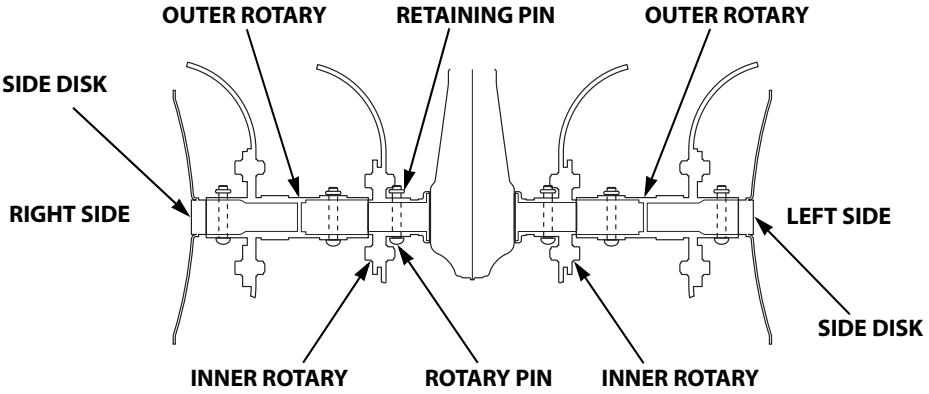

- In case of 2 unit rotaries:

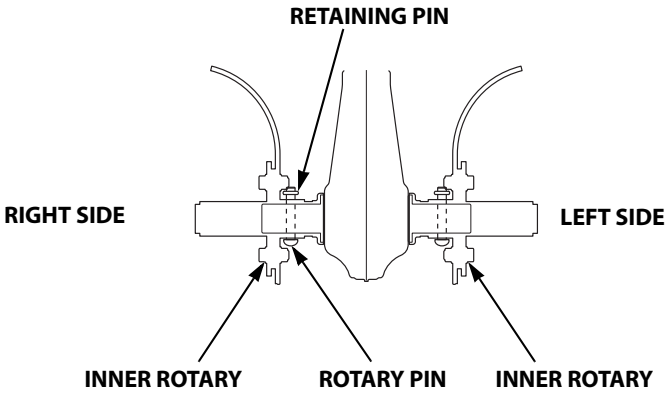

Rotary and side disk removal

Set the front wheel to the UP position (see page 23).

1. Pull up the handlebar while holding it to contact the front wheel of the tiller to the ground.

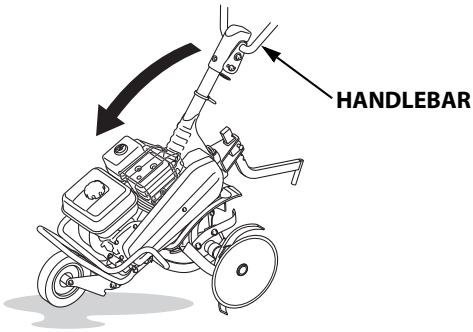

2. Grip the handlebar and push it in the direction of the arrow to lift the nearest rotary off the ground.
   Do not pull the cables while gripping the handlebar.
   Pay attention when tilting the tiller. Gasoline may leak if the tilting angle is more than necessary.

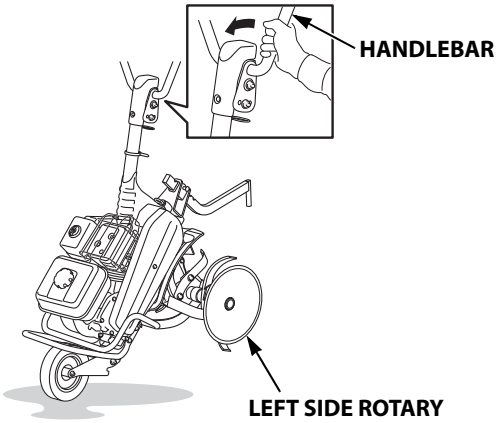

3. Remove the retaining pin and rotary pin, and then remove the side disk and outer rotary.

4. Remove the retaining pin and rotary pin, and then remove the inner rotary.

5. The opposite side rotary/side disk is similar.

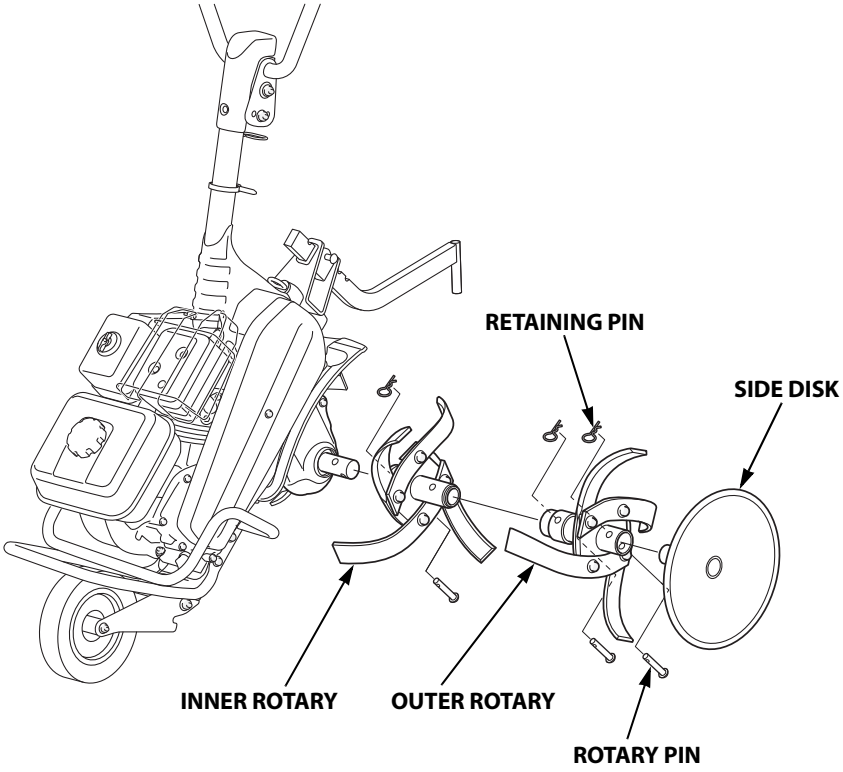

Rotary and side disk installation

1. Install the inner rotary to the axle.
   Insert the rotary pin and set the retaining pin so that the ring of the retaining pin is in the direction of rotation.
   - The “B” mark on the left side inner rotary is visible.
   - The “A” mark on the right side inner rotary is visible.

LEFT INNER ROTARY
(Viewed from outer rotary side)

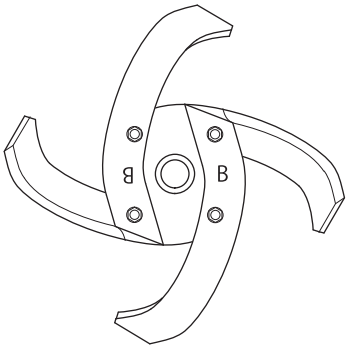

RIGHT INNER ROTARY
(Viewed from outer rotary side)

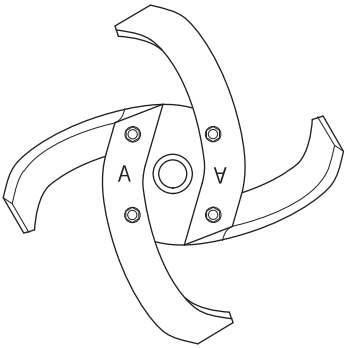

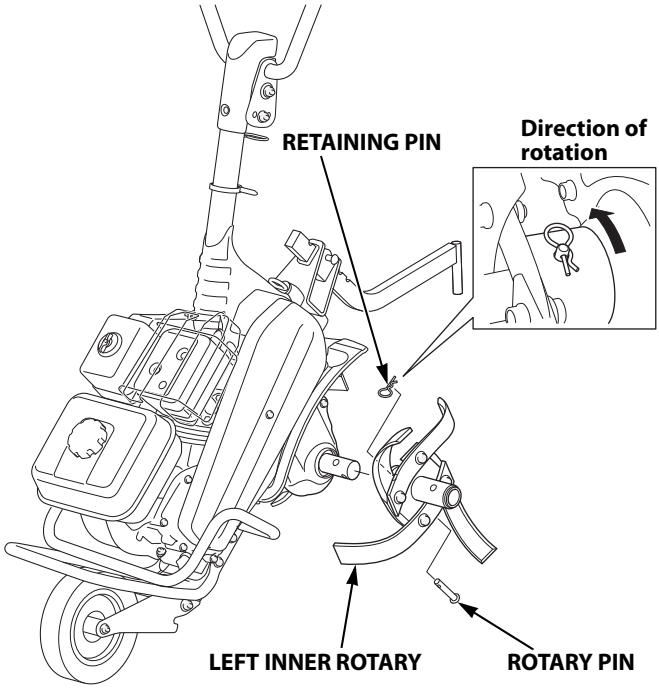

2. Install the outer rotary to the inner rotary.
   Insert the rotary pin and set the retaining pin so that the ring of the retaining pin is in the direction of rotation.
- The "B" mark on the left side outer rotary is visible.
- The "A" mark on the right side outer rotary is visible.

LEFT OUTER ROTARY
(Viewed from side disk)

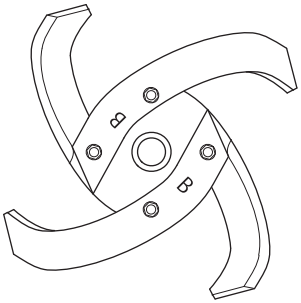

RIGHT OUTER ROTARY
(Viewed from side disk)

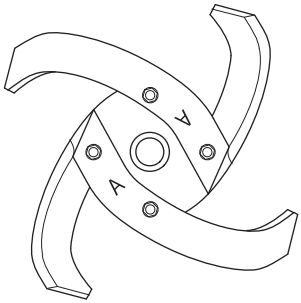

3. Install the side disk to the rotary's end.
   Insert the rotary pin and set the retaining pin so that the ring of the retaining pin is in the direction of rotation.

4. The opposite side rotary/side disk is similar.

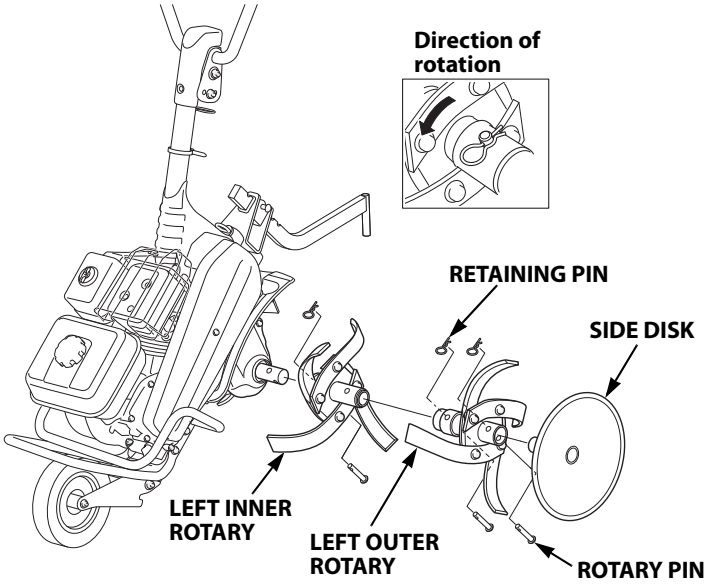

HANDLING TIPS

- Adjust the handlebar height to a comfortable position (waist height for normal tilling).
- The drag bar should always be used when tilling. It enables you to compensate for the hardness of the soil. The ideal height of the drag bar will depend on the type of soil being tilled and soil conditions at the time of tilling. In general, however, the drag bar should be adjusted so that the tiller is tilted slightly backward.
- If the machine jerks forward while tilling, press down on the handlebars. This will cause the drag bar to dig more deeply into the soil.
- If tines dig in but the machine will not move forward, move the handlebars from side to side.
- Stop the tines before crossing gravel drives, walks, or roads. Stay alert for hidden hazards or traffic.
- Stop the engine immediately if the tiller vibrates abnormally. Check the tiller for damage or loose parts, and repair or replace them before using the tiller again. Vibration is usually a sign of trouble.

STOPPING THE ENGINE

To stop the engine in an emergency, simply turn the engine switch to the OFF position. Under normal conditions, use the following procedure.

1. Release the clutch lever to the DISENGAGED position.
   Even if you release the clutch, the tine may not stop immediately.

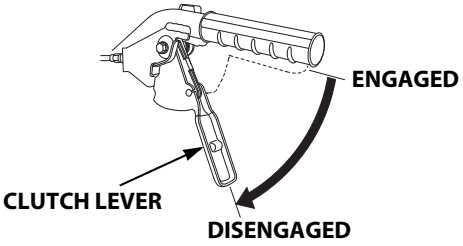

2. Move the throttle lever to the slowest position.

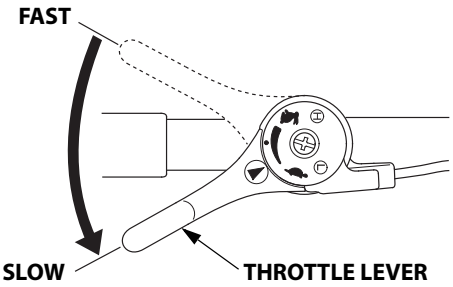

3. Turn the engine switch to the OFF position.

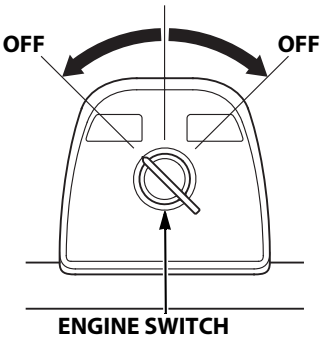

4. Turn the fuel valve to the OFF position.

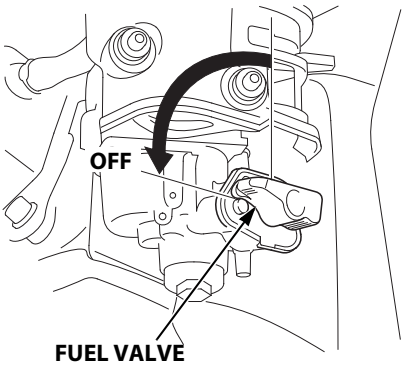

SERVICING YOUR TILLER

THE IMPORTANCE OF MAINTENANCE

Good maintenance is essential for safe, economical, and trouble-free operation. It will also help reduce air pollution.

To help you properly care for your tiller, the following pages include a maintenance schedule, routine inspection procedures, and simple maintenance procedures using basic hand tools. Other service tasks that are more difficult, or require special tools, are best handled by professionals and are normally performed by a Honda technician or other qualified mechanic.

The maintenance schedule applies to normal operating conditions. If you operate your tiller under unusual conditions (such as sustained high-load or high-temperature operation, or use in dusty conditions), consult your servicing dealer for recommendations applicable to your individual needs and use.

⚠ WARNING

Failure to properly maintain this tiller, or failing to correct a problem before operation, could result in a significant malfunction.

Some malfunctions can cause serious injuries or death.

Always follow the inspection and maintenance recommendations and schedules in this owner's manual.

Remember that an authorized Honda servicing dealer knows your tiller best and is fully equipped to maintain and repair it.

To ensure the best quality and reliability, use only new, Honda Genuine parts or their equivalents for repair and replacement.

Maintenance, replacement, or repair of the emission control devices and systems may be performed by any engine repair establishment or individual, using parts that are "certified" to U.S. EPA standards.

MAINTENANCE SAFETY

Some of the most important safety precautions follow. However, we cannot warn you of every conceivable hazard that can arise in performing maintenance.
Only you can decide whether or not you should perform a given task.

⚠ WARNING

Improper maintenance can cause an unsafe condition.

Failure to properly follow maintenance instructions and precautions can cause serious injuries or death.

Always follow the procedures and precautions in this owner's manual.

Safety Precautions

- Make sure the engine is off before you begin any maintenance or repairs. This will eliminate several potential hazards:
  - **Carbon monoxide poisoning from engine exhaust.**
    Be sure there is adequate ventilation whenever you operate the engine.
  - **Burns from hot parts.**
    Let the engine and exhaust system cool before touching.
  - **Injury from moving parts.**
    Do not run the engine unless instructed to do so.
- Read the instructions before you begin, and make sure you have the tools and skills required.
- To reduce the possibility of fire or explosion, be careful when working around gasoline. Use only a non-flammable solvent, not gasoline, to clean parts. Keep cigarettes, sparks, and flames away from all fuel-related parts.
- Disconnect the spark plug cap and wear heavy gloves when working near the tine blades.

MAINTENANCE SCHEDULE

Item / REGULAR SERVICE PERIOD (3) Perform at every indicated month or operating hour interval, whichever comes first.		After storage	Each use	First month or 20 hrs.	Every 3 months or 50 hrs.	Every 6 months or 100 hrs.	Every year or 300 hrs.	Page
• Engine oil	Check level		○					38
	Change	○		○		○		39
• Air filter	Check		○					42
	Clean				○(1)			42
	Replace						○	
Tiller outside	Check		○					—
Bolts and Nuts tightens	Check-tightness		○					—
Wiring and cables	Check		○					—
Engine operation	Check		○					16
Clutch lever function	Check		○					—
	Grease-lubricate	○(2)(5)						—
Clutch cable	Check-adjust			○(2)		○(2)		—
Belt tension	Check-adjust			○(4)		○(4)		47
Transmission oil	Check level		○					41
• Sediment cup	Clean					○		49
Grease application	Grease-lubricate	○(2)						—
• Idle speed	Check-adjust						○(2)	—
• Spark plug	Check-adjust					○		44
	Replace						○	
Spark arrester (Optional parts)	Clean					○		50
Throttle cable	Check-adjust						○	46
• Valve clearance	Check-adjust						○(2)	—
• Combustion chamber	Clean	After every 500 hrs. (2)(6)						—
• Fuel tank and filter	Clean	○(2)				○(2)		—
• Fuel tube	Check	Every 2 years (Replace if necessary)(2)						—

• Emission related items.

(1) Service every 10 operating hours or every day when used in dusty areas.

(2) These items should be serviced by your servicing dealer, unless you have the proper tools and are mechanically proficient. Refer to Honda shop manual for service procedures. See "Honda Publications" on page 68 for ordering information.

(3) For commercial use, log hours of operation to determine proper maintenance intervals.

(4) Check that there are no cracks or abnormal wear in the belt, and replace it if necessary.

(5) Apply grease to the pin part of the clutch lever fulcrum for prevention of rust at a long time storage.(more than 30 days)

(6) Conduct the cleaning swiftly after passing the indicated period.

Failure to follow this maintenance schedule could result in non-warrantable failures.

REFUELING

Remove the fuel tank cap and check the fuel level with the tiller on a level surface.

If the fuel level is low, refuel in a well-ventilated area with the engine stopped. If the engine has been running, allow it to cool first. Never refuel the engine inside a building where gasoline fumes can reach flames or sparks.

Refuel carefully to avoid spilling fuel. Do not fill above the fuel level mark.

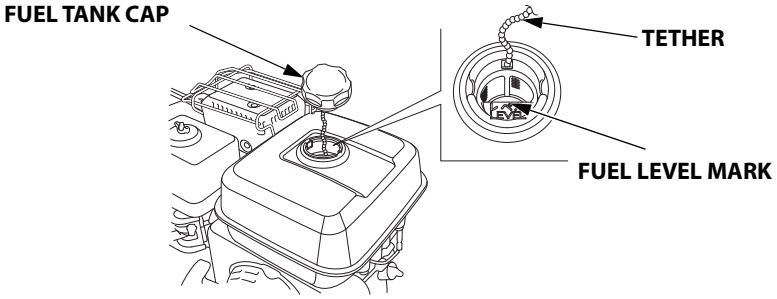

⚠ WARNING

Gasoline is highly flammable and explosive.

You can be burned or seriously injured when handling fuel.

- Stop the engine and let it cool before handling fuel.
- Keep heat, sparks, and flame away.
- Handle fuel only outdoors.
- Keep away from your vehicle.
- Wipe up spills immediately.

NOTICE

Fuel can damage paint and plastic. Be careful not to spill fuel when filling your fuel tank. Damage caused by spilled fuel is not covered under the Distributor's Limited Warranty.

After refueling, reinstall the fuel tank cap securely.

Spilled fuel is not only a fire hazard, it causes environmental damage. Wipe up spills immediately. If fuel is spilled on clothing, change clothing immediately.
If fuel is spilled, do not attempt to start the engine but move the machine away from the area of spillage and avoid creating any source of ignition until fuel vapors have dissipated.

FUEL RECOMMENDATIONS

This engine is certified to operate on unleaded gasoline with a pump octane rating of 86 or higher.

Never use gasoline that is stale, contaminated, or mixed with oil.
Avoid getting dirt or water in the fuel tank.

You may use regular unleaded gasoline containing no more than 10% ethanol (E10) or 5% methanol by volume. In addition, methanol must contain cosolvents and corrosion inhibitors.

Use of fuels with content of ethanol or methanol greater than shown above may cause starting and/or performance problems. It may also damage metal, rubber, and plastic parts of the fuel system.

Engine damage or performance problems that result from using a fuel with percentages of ethanol or methanol greater than shown above are not covered under warranty.

If your equipment will be used on an infrequent or intermittent basis, please refer to the fuel section of the STORAGE chapter (see page 52) for additional information regarding fuel deterioration.

ENGINE OIL LEVEL CHECK

Check the engine oil level with the engine stopped and in a level position.

1. To keep the tiller (engine bed) horizontal, place a wooden block under the front wheel and drag bar.

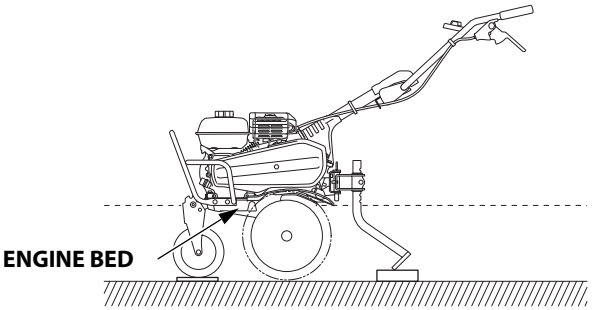

2. Remove the oil filler cap.

3. Check the oil level. If it is below the upper limit, fill with the recommended oil (see page 40) to the upper limit.

4. Reinstall the oil filler cap securely.

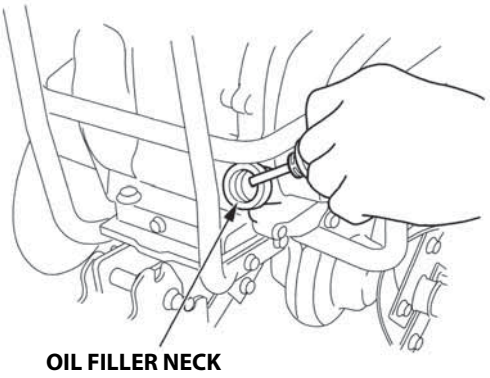

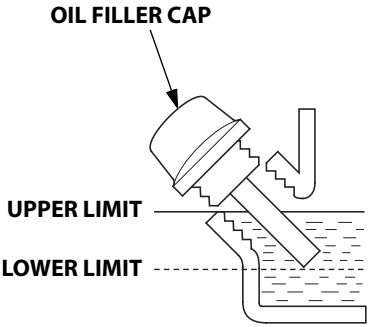

ENGINE OIL CHANGE

Drain the oil while the engine is warm to assure rapid and complete draining.

1. Place cardboard and a suitable container below the engine to guide and catch the used oil, and then remove the oil filler cap, drain plug, and sealing washer.
2. Allow the used oil to drain completely, and then reinstall the drain plug with a new sealing washer. Tighten the plug securely.

   DRAIN PLUG TIGHTENING TORQUE:
   13 lbf·ft (18 N·m , 1.8 kgf·m)

   NOTICE

   Improper disposal of engine oil can be harmful to the environment. If you change your own oil, please dispose of the used oil properly. Put it in a sealed container and take it to a recycling center. Do not throw it in the trash, pour it on the ground, or pour it down a drain.

3. With the tiller in a level position, fill with the recommended oil to the top of the oil filler neck (see page 38).
   Maximum oil capacity: 19 oz (0.58 L)

   NOTICE

   Running the engine with a low oil level can cause engine damage.
   This type of damage is not covered under the Distributor's Limited Warranty.

4. Reinstall the oil filler cap securely.

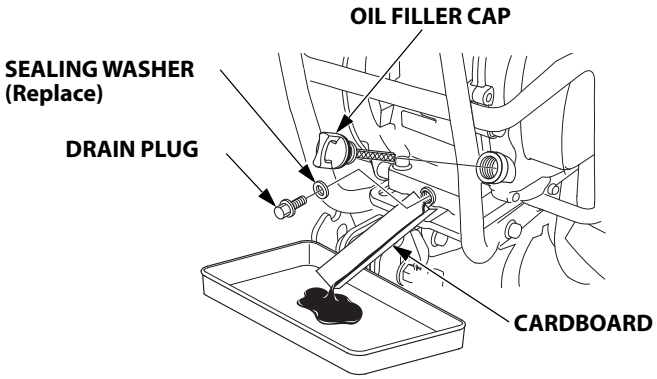

ENGINE OIL RECOMMENDATIONS

Oil is a major factor affecting performance and service life. Use 4-stroke automotive detergent oil.

SAE10W-30 is recommended for general use. Other viscosities shown in the chart may be used when the average temperature in your area is within the recommended range.

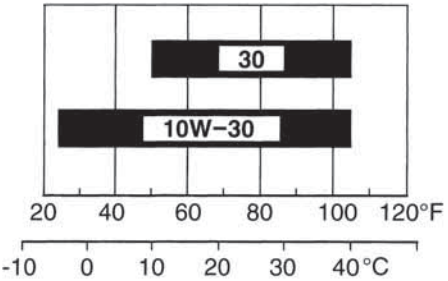

AMBIENT TEMPERATURE

The SAE oil viscosity and service category are in the API label on the oil container. Honda recommends that you use API SERVICE category SJ or later (or equivalent) oil.

TRANSMISSION OIL LEVEL CHECK

Check the transmission oil level with the tiller on a level surface and the engine stopped.

1. Remove the transmission oil filler cap. The oil should be level with the lower edge of the oil filler hole.
2. If the level is low, add the same oil as recommended for the engine (see page 40) until it reaches the lower edge of the filler hole.
3. Reinstall the oil filler cap securely.

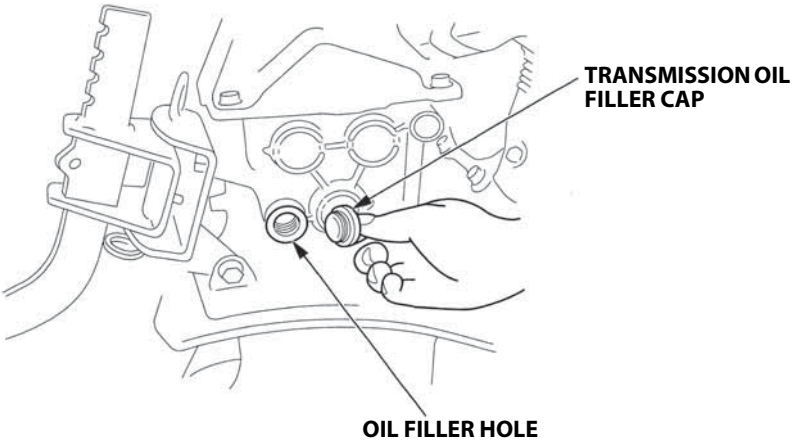

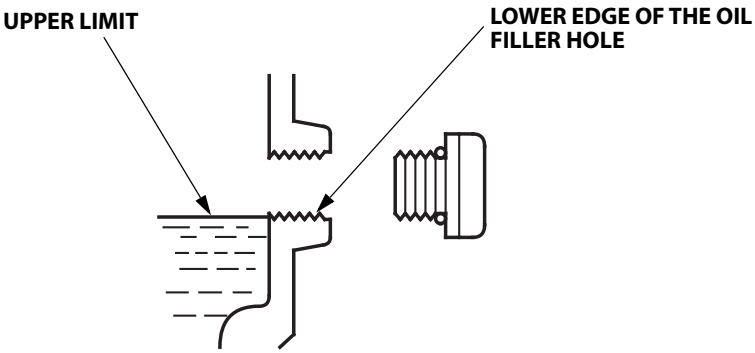

AIR FILTER INSPECTION

1. Unscrew the wing nut and remove the air cleaner cover.
   Check the air filter elements to be sure they are clean and in good condition.

2. If the air filter elements are dirty, clean them as described on page 43. Replace the air filter elements if they are damaged.

3. Reinstall the air cleaner cover, and tighten the wing nut securely.

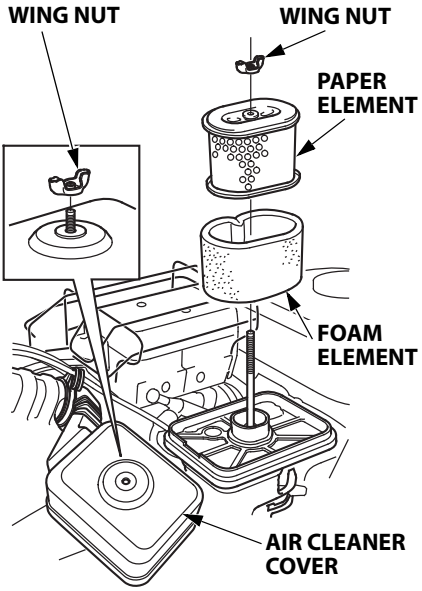

NOTICE

Operating the engine without an air filter, or with a damaged air filter, will allow dirt to enter the engine, causing rapid engine wear. This type of damage is not covered by the Distributor's Limited Warranty.

AIR FILTER CLEANING

A dirty air filter will restrict air flow to the carburetor, reducing engine performance. If you operate the tiller in very dusty areas, clean the air filter more frequently than specified in the *Maintenance Schedule*.

1. Remove the wing nut and the air cleaner cover. Remove the second wing nut. Remove the elements and separate them.
2. Carefully check both elements for holes or tears and replace if damaged.

3. Clean both filter elements if they are to be reused.

Foam element:
Clean in warm soapy water, rinse and allow to dry thoroughly. Or clean in high flash point solvent and allow to dry. Dip the element in clean engine oil and squeeze out all the excess. The engine will smoke during initial startup if too much oil is left in the foam.

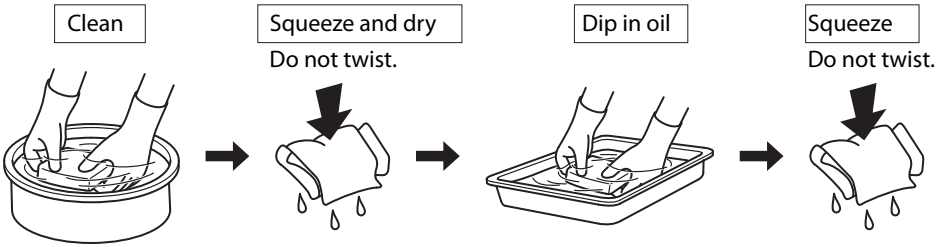

Paper element:
Tap the element lightly several times on a hard surface to remove excess dirt, or blow compressed air [not exceeding 207 kPa (2.1 kgf/cm^2) 30 psi] through the filter from the inside out. Never try to brush the dirt off: brushing will force dirt into the fibers.

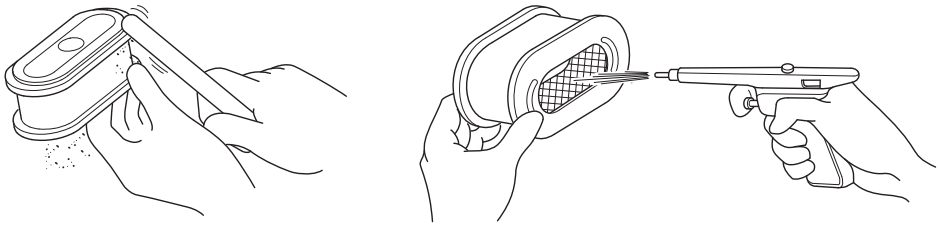

4. Wipe dirt from the air cleaner base and cover, using a moist rag.
5. Place the foam air filter element over the paper air filter element, and install the assembled air filter. Tighten the wing nut securely.
6. Reinstall the air cleaner cover, and tighten the wing nut securely.

SPARK PLUG SERVICE

Recommended spark plug: BPR5ES (NGK)
W16EPR-U (DENSO)

NOTICE

An incorrect spark plug can cause engine damage.

1. Disconnect the spark plug cap, and remove any dirt from around the spark plug area.
2. Remove the spark plug with a 13/16-inch spark plug wrench.
3. Inspect the spark plug. Replace it if the electrodes are worn, or the insulator is cracked or chipped.
4. Measure the spark plug electrode gap with a wire-type feeler gauge. The gap should be 0.028 – 0.031 in (0.7 – 0.8 mm). Correct the gap, if necessary, by carefully bending the side electrode.
5. Install the spark plug carefully, by hand, to avoid cross-threading.
6. After the spark plug seats, tighten with a 13/16-inch spark plug wrench to compress the washer.

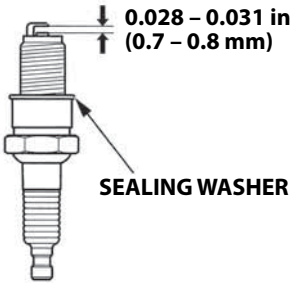

If reinstalling a used spark plug, tighten 1/8 – 1/4 turn after the spark plug seats.

If installing a new spark plug, tighten 1/2 turn after the spark plug seats.

SPARK PLUG TORQUE:
13 lbf·ft (18 N·m , 1.8 kgf·m)

NOTICE

A loose spark plug can overheat and damage the engine.
Overtightening the spark plug can damage the threads in the cylinder head.

7. Attach the spark plug cap.

CLUTCH CABLE ADJUSTMENT

With the clutch disengaged, measure the freeplay between the handle bracket stopper and clutch lever.

Freeplay: 0.08 – 0.16 in (2.0 – 4.0 mm)

If the freeplay is incorrect, loosen the lock nut and turn the adjusting bolt in or out as required. After adjustment, tighten the lock nut securely.

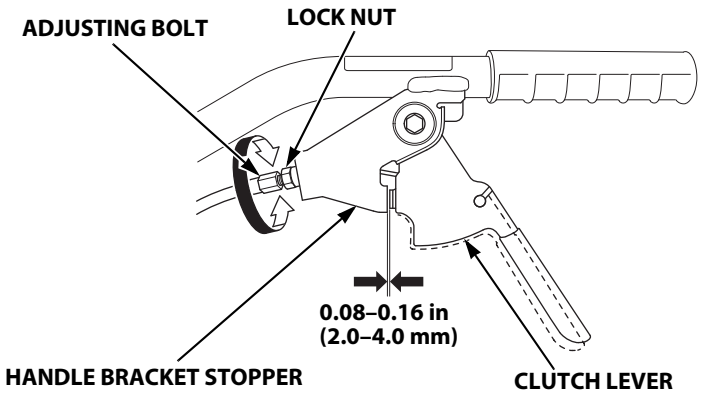

THROTTLE CABLE ADJUSTMENT

Measure the free play at the tip of the lever.

Free play: 0.2 – 0.4 in (5 – 10 mm)

If the free play is incorrect, loosen the lock nut and turn the adjusting nut in or out as required to obtain the correct free play.

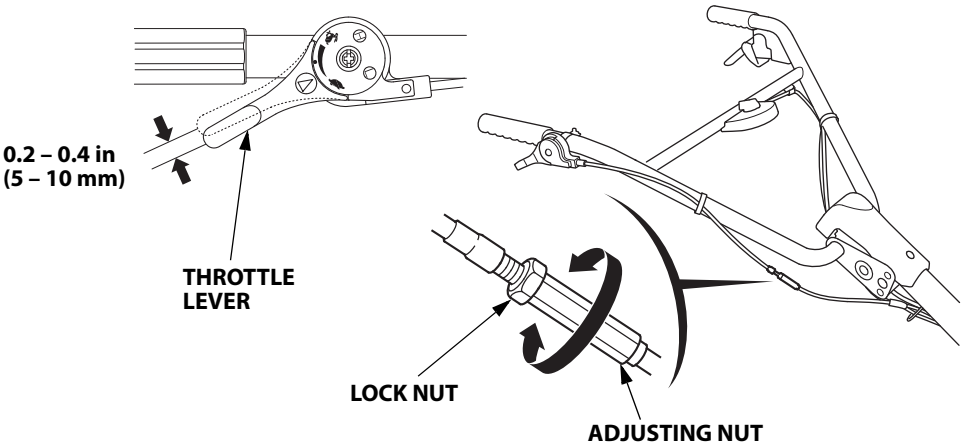

DRIVE BELT ADJUSTMENT

1. Stop the engine, and remove the spark plug cap.

2. Remove the 6 x 8 mm flange bolt from the belt cover and remove the belt cover.

3. Adjust the clutch cable (see page 46). Belt tension is correct when the distance from the top of the belt to the top of the tension roller is 1.7 – 1.9 in (43 – 49 mm) when the clutch is engaged.

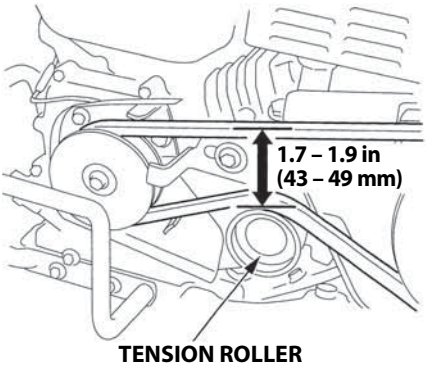

4. To adjust, loosen the four engine mounting bolts and the engine stay tightening bolt, and move the engine forward or backward to get proper tension on the belt. After adjusting the belt tension, use a straightedge to make sure that the outside face of the drive pulley is flush with the outside face of the driven pulley.

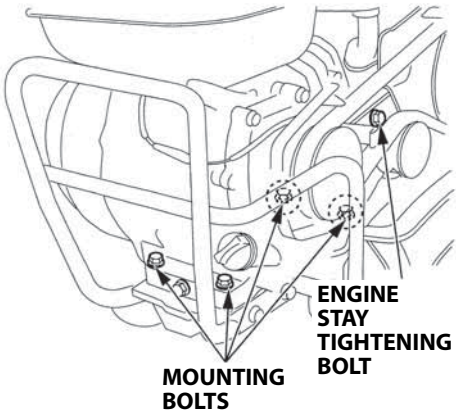

5. Loosen the belt stopper attaching bolts. Adjust the clearance between the belt stopper and the belt as illustrated with the clutch lever squeezed (engaged).

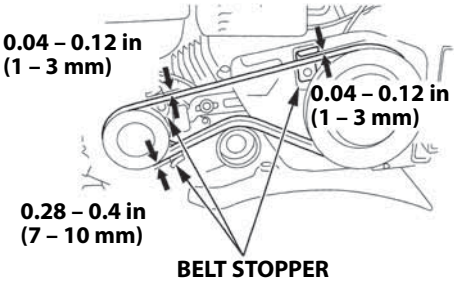

6. After adjustment has been completed, fasten the belt stopper bolts securely.

7. Install the belt cover.

After checking or adjusting the drive belt, be sure to reinstall the belt cover. The cover is designed to help shield you from the moving belt and pulleys.

⚠ WARNING

Contact with the moving belt or pulleys may cause you or your clothing to get caught in the moving parts resulting in serious injury.

Always keep the belt cover installed when operating the tiller.

SEDIMENT CUP CLEANING

1. Turn the engine switch to the OFF position.
2. Turn the fuel valve to the OFF position so that it touches the stopper button.

⚠ WARNING

Gasoline is highly flammable and explosive.

You can be burned or seriously injured when handling fuel.

- Stop the engine and let it cool before handling fuel.
- Keep heat, sparks, and flame away.
- Handle fuel only outdoors.
- Keep away from your vehicle.
- Wipe up spills immediately.

3. Remove the sediment cup and O-ring with a 10 mm wrench.
4. Empty the sediment cup, and wash it in non-flammable solvent.
5. Install a new O-ring and the sediment cup. Tighten the sediment cup securely.
6. Turn the fuel valve to the ON position, and check for leaks.

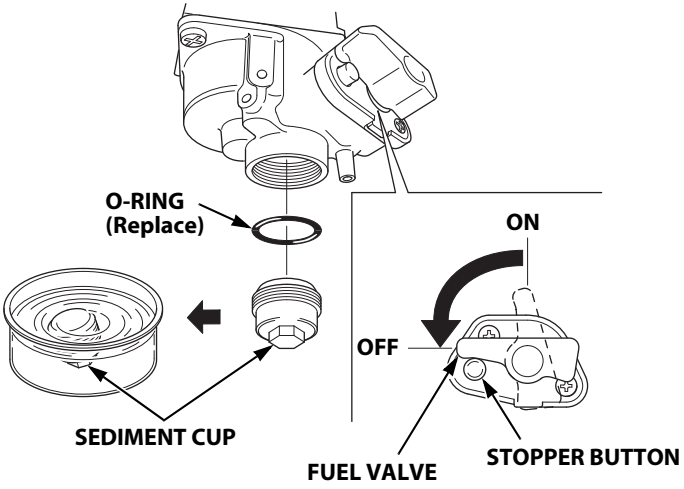

SPARK ARRESTER SERVICE (optional equipment)

Your engine is not factory-equipped with a spark arrester. In some areas, it is illegal to operate an engine without a spark arrester. Check local laws and regulations. A spark arrester is available from authorized Honda servicing dealers.

The spark arrester must be serviced every 6 months or 100 hours to keep it functioning as designed.

If the engine has been running, the muffler will be very hot. Allow the muffler to cool before servicing the spark arrester.

1. Remove the two 8 mm nuts, and remove the muffler.
2. Remove the four 5 mm self-tapping screws, and remove the muffler protector from the muffler.
3. Remove the 4 mm screw, and remove the spark arrester from the muffler.

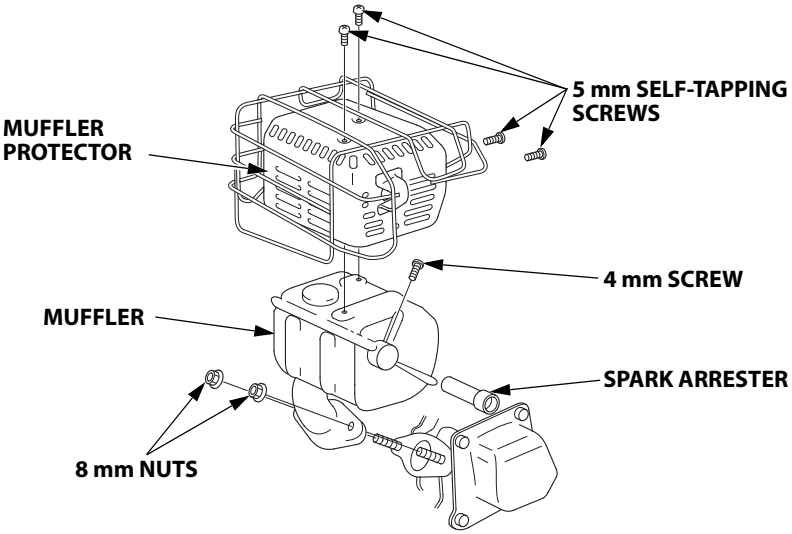

4. Use a brush to remove carbon deposits from the spark arrester screen. Be careful to avoid damaging the screen. The spark arrester must be free of breaks and holes. Replace the spark arrester if it is damaged.

5. Install the spark arrester and muffler protector in the reverse order of disassembly.

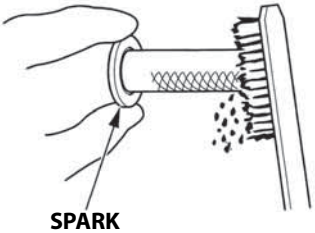

STORAGE

STORAGE PREPARATION

Proper storage preparation is essential for keeping your tiller trouble free and looking good. The following steps will help to keep rust and corrosion from impairing your tiller's function and appearance, and will make the engine easier to start when you use the tiller again.

Cleaning

1. Wash the tiller, including the underside.

Engine

Wash the engine by hand, and be careful to prevent water from entering the air cleaner.

NOTICE

- *Using a garden hose or pressure washing equipment can force water into the air cleaner. Water in the air cleaner will soak the filter elements and can enter the carburetor or engine cylinder, causing damage.*
- *Water contacting a hot engine can cause damage. If the engine has been running, allow it to cool for at least half an hour before washing.*

Tiller

If using a garden hose or pressure washing equipment to clean the tiller, be careful to avoid getting water on the drive belt.

NOTICE

Spraying water on hot tine shaft bearings can cause them to be damaged from cooling too quickly.

2. After washing the tiller, wipe dry all accessible surfaces.

3. Start the engine outdoors, and let it run until it reaches normal operating temperature to evaporate any water remaining on the engine.

4. While the engine is running, operate the clutch lever to expel water from the pulleys, belt, and other moving items.

5. Stop the engine and allow it to cool.

6. After the tiller is clean and dry, touch up any damaged paint and coat other areas with a light film of oil. Lubricate the throttle cable core with a silicone spray lubricant.

Fuel

NOTICE

Depending on the region where you operate your equipment, fuel formulations may deteriorate and oxidize rapidly. Fuel deterioration and oxidation can occur in as little as 30 days and may cause damage to the carburetor and/or fuel system. Please check with your servicing dealer for local storage recommendations.

Gasoline will oxidize and deteriorate in storage. Old gasoline will cause hard starting, and it leaves gum deposits that clog the fuel system. If the gasoline in your tiller deteriorates during storage, you may need to have the carburetor and other fuel system components serviced or replaced.

The length of time that gasoline can be left in your fuel tank and carburetor without causing functional problems will vary with such factors as gasoline blend, your storage temperatures, and whether the fuel tank is partially or completely filled. The air in a partially filled fuel tank promotes fuel deterioration. Very warm storage temperatures accelerate fuel deterioration. Fuel deterioration problems may occur within a few months, or even less if the gasoline was not fresh when you filled the fuel tank.

The *Distributor's Limited Warranty* does not cover fuel system damage or engine performance problems resulting from neglected storage preparation.

You can extend fuel storage life by adding a gasoline stabilizer that is formulated for that purpose, or you can avoid fuel deterioration problems by draining the fuel tank and carburetor.

Adding a Gasoline Stabilizer to Extend Fuel Storage Life

When adding a gasoline stabilizer, fill the fuel tank with fresh gasoline. If only partially filled, air in the tank will promote fuel deterioration during storage. If you keep a container of gasoline for refueling, be sure that it contains only fresh gasoline.

1. Add gasoline stabilizer following the manufacturer's instructions.
2. After adding a gasoline stabilizer, run the engine outdoors for 10 minutes to be sure that treated gasoline has replaced the untreated gasoline in the carburetor.
3. Stop the engine, and turn the fuel valve to the OFF position.

Draining the Fuel Tank and Carburetor

1. Place an approved gasoline container below the carburetor, and use a funnel to avoid spilling fuel.

⚠ WARNING

Gasoline is highly flammable and explosive.

You can be burned or seriously injured when handling fuel.

- Stop the engine and let it cool before handling fuel.
- Keep heat, sparks, and flame away.
- Handle fuel only outdoors.
- Keep away from your vehicle.
- Wipe up spills immediately.

2. Remove the sediment cup and O-ring.
3. Turn the fuel valve to the ON position. Drain the gasoline into a suitable container.

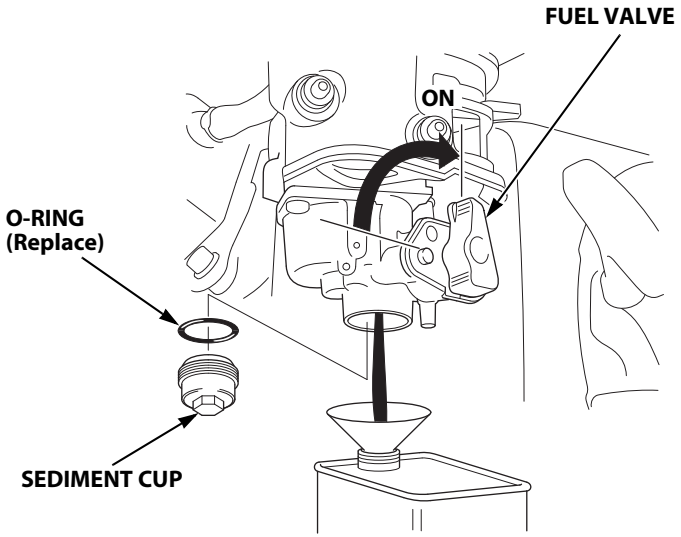

4. Allow the gasoline to drain completely, and turn the fuel valve to the OFF position.

5. Turn the fuel valve to the DRAIN position while keeping the stopper button pressed. Drain the gasoline into a suitable container.

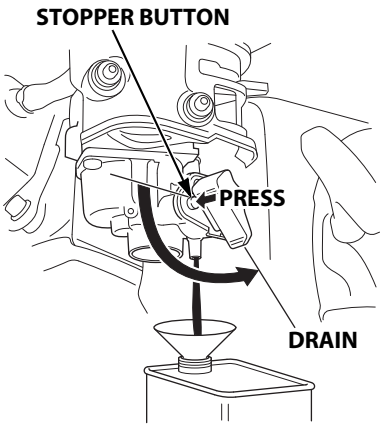

6. Allow the gasoline to drain completely. Turn the fuel valve back to the OFF position so that it touches the stopper button.

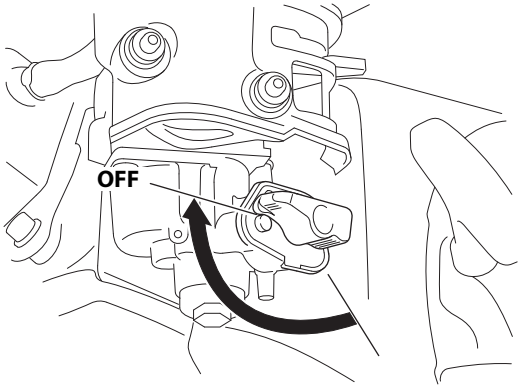

7. Reinstall a new O-ring and the sediment cup. Tighten the sediment cup securely.

STORAGE

Engine Oil

Change the engine oil (see page 39).

Engine Cylinder

1. Remove the spark plug (see page 44).
2. Pour a teaspoon (5 cc) of clean engine oil into the cylinder.
3. Gently pull the starter grip several times to distribute the oil in the cylinder.
4. Reinstall the spark plug and spark plug cap.
5. Pull the starter grip slowly until you feel resistance and then return the starter grip gently. This will close the valves so moisture cannot enter the engine cylinder.

STORAGE PRECAUTIONS

Follow Honda's recommendations for safe storage of your tiller.

If your tiller will be stored with gasoline in the fuel tank and carburetor, it is important to reduce the hazard of gasoline vapor ignition. Select a well ventilated storage area away from any appliance that operates with a flame, such as a furnace, water heater, or clothes dryer. Also avoid any area with a spark-producing electric motor, or where power tools are operated.

If possible, avoid storage areas with high humidity, because that promotes rust and corrosion.

Unless all fuel has been drained from the fuel tank, leave the fuel valve in the OFF position to reduce the possibility of fuel leakage.

Place the tiller on a level surface. Tilting can cause fuel or oil leakage.

Allow the engine to cool before storing in any enclosure.

With the engine and exhaust system cool, cover the tiller to keep out dust. A hot engine and exhaust system can ignite or melt some materials. Do not use a plastic sheet as a dust cover. A nonporous cover will trap moisture around the tiller, promoting rust and corrosion.

REMOVAL FROM STORAGE

Check your tiller as described in the *BEFORE OPERATION* chapter of this manual (see page 15).

If the fuel was drained during storage preparation, fill the tank with fresh gasoline. If you keep a container of gasoline for refueling, be sure that it contains only fresh gasoline. Gasoline oxidizes and deteriorates over time, causing hard starting.

If the cylinder was coated with oil during storage preparation, the engine may smoke briefly at start-up. This is normal.

TRANSPORTING

Follow Honda's recommendations for safe loading, unloading, and transporting your tiller.

BEFORE LOADING

If the engine has been running, allow it to cool before loading the tiller on the transport vehicle. A hot engine and exhaust system can burn you and can ignite some materials.

Always turn the ignition switch to the OFF position. Make sure to turn the fuel valve OFF. This will prevent carburetor flooding and reduce the possibility of fuel leakage.

LOADING AND UNLOADING

If a suitable loading ramp is not available, two people should lift the tiller on and off the transport vehicle while holding the tiller level.

Position the tiller so it sits flat on the bed of the transport vehicle. Tie the tiller down with rope or straps. Keep the tie-down rope or straps away from the controls, adjustment levers, cables, and the carburetor.

TAKING CARE OF UNEXPECTED PROBLEMS

ENGINE

ENGINE WILL NOT START

Possible Cause	Correction
Fuel valve OFF.	Turn valve ON (p.11).
Choke OPEN.	Move to CLOSED unless engine is warm (p. 11).
Engine switch OFF.	Turn engine switch to ON (p. 12).
Out of fuel.	Refuel (p. 36).
Bad fuel; tiller stored without treating or draining gasoline, or refueled with bad gasoline.	Drain fuel tank and carburetor (p. 54). Refuel with fresh gasoline (p. 36).
Spark plug faulty, fouled, or improperly gapped.	Gap or replace spark plug (p. 44).
Spark plug wet with fuel (flooded engine).	Dry and reinstall spark plug. Start engine with throttle lever in FAST position.
Fuel filter clogged, carburetor malfunction, ignition malfunction, valves stuck, etc.	Take the tiller to your servicing dealer, or refer to the shop manual.

ENGINE LACKS POWER

Possible Cause	Correction
Air filter clogged.	Clean or replace air filter (p. 43).
Bad fuel; tiller stored without treating or draining gasoline, or refueled with bad gasoline.	Drain fuel tank and carburetor (p. 54). Refuel with fresh gasoline (p. 36).
Fuel filter clogged, carburetor malfunction, ignition malfunction, valves struck, etc.	Take the tiller to your servicing dealer, or refer to the shop manual.

TILLER

POOR TILLING QUALITY

Possible Cause	Correction
Engine speed is too slow for soil conditions.	Move the throttle to FAST position (p. 12).
Tiller is moving too fast for soil conditions.	Reduce throttle speed (p. 12).
Drag bar adjustment set too high.	Lower drag bar adjustment (p. 22).
Tines dull, worn, or damaged.	Replace tines if necessary.
Wrong tines installed.	Install correct tines.
Tines installed incorrectly.	Install tines correctly.

TECHNICAL INFORMATION

Serial Number Locations

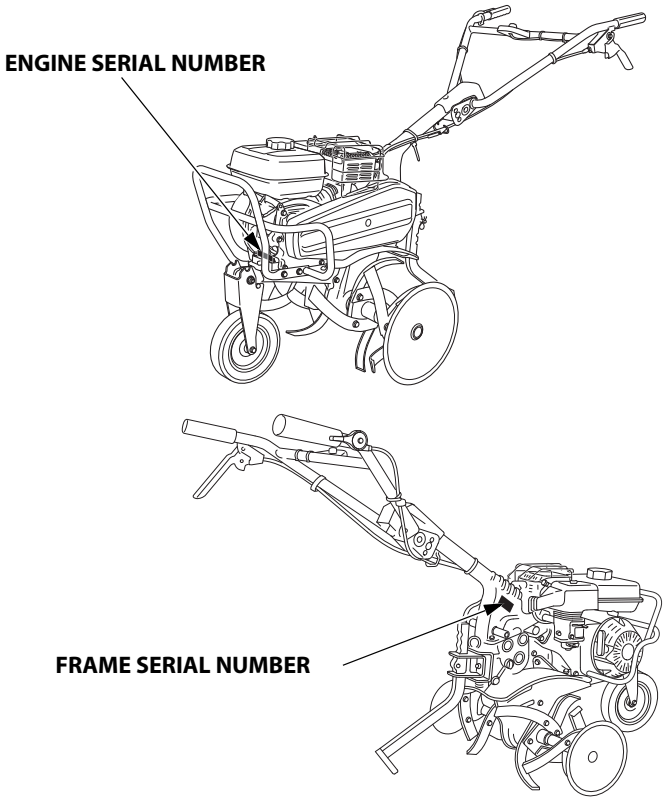

Record the engine and frame serial numbers in the spaces below. You will need these serial numbers when ordering parts, and when making technical or warranty inquires (see page 69).

Engine serial number: _____

Frame serial number: _____

Date purchased: _____

Carburetor Modifications for High Altitude Operation

At high altitude, the standard carburetor air-fuel mixture will be too rich. Performance will decrease, and fuel consumption will increase. A very rich mixture will also foul the spark plug and cause hard starting. Operation at an altitude that differs from that at which this engine was certified, for extended periods of time, may increase emissions.

High altitude performance can be improved by specific modifications to the carburetor. If you always operate your tiller at altitudes above 2,000 feet (610 meters) have your servicing dealer perform this carburetor modification. This engine, when operated at high altitude with the carburetor modifications for high altitude use, will meet each emission standard throughout its useful life.

Even with carburetor modification, engine horsepower will decrease about 3.5% for each 1,000-foot (300-meter) increase in altitude. The effect of altitude on horsepower will be greater than this if no carburetor modification is made.

NOTICE

When the carburetor has been modified for high altitude operation, the air-fuel mixture will be too lean for low altitude use. Operation at altitudes below 2,000 feet (610 meters) with a modified carburetor may cause the engine to overheat and result in serious engine damage. For use at low altitudes, have your servicing dealer return the carburetor to original factory specifications.

Emission Control System Information

Source of Emissions

The combustion process produces carbon monoxide, oxides of nitrogen, and hydrocarbons. Control of hydrocarbons and oxides of nitrogen is very important because, under certain conditions, they react to form photochemical smog when subjected to sunlight. Carbon monoxide does not react in the same way, but it is toxic.

Honda utilizes appropriate air/fuel ratios and other emissions control systems to reduce the emissions of carbon monoxide, oxides of nitrogen, and hydrocarbons.
Additionally, Honda fuel systems utilize components and control technologies to reduce evaporative emissions.

The U.S. and California Clean Air Acts, and Environment and Climate Change Canada (ECCC)

U.S. EPA, California and Canadian regulations require all manufacturers to furnish written instructions describing the operation and maintenance of emission control systems.

The following instructions and procedures must be followed in order to keep the emissions from your Honda engine within the emission standards.

Tampering and Altering

NOTICE

Tampering is a violation of federal and California law.

Tampering with or altering the emission control system may increase emissions beyond the legal limit. Among those acts that constitute tampering are:

- Removal or alteration of any part of intake, fuel, or exhaust systems.
- Alterations that would cause the engine to operate outside its design parameters.

Problems That May Affect Emissions

If you are aware of any of the following symptoms, have your engine inspected and repaired by your authorized Honda Power Equipment dealer.

- Hard starting or stalling after starting.
- Rough idle.
- Misfiring or backfiring under load.
- Afterburning (backfiring).
- Black exhaust smoke or high fuel consumption.

Replacement Parts

The emissions control systems on your new Honda engine were designed, built, and certified to conform with EPA, California (models certified for sale in California only), and Canadian emissions regulations. We recommend the use of Honda Genuine parts whenever you have maintenance done. These original design replacement parts are manufactured to the same standards as the original parts, so you can be confident of their performance.
Honda cannot deny coverage under the emission warranty solely for the use of non-Honda replacement parts or service performed at a location other than an authorized Honda dealership; you may use comparable parts certified by the EPA, CARB or ECCC, as applicable, and have service performed at non-Honda locations. However, the use of replacement parts that are not of the original design and quality may impair the effectiveness of your emissions control system.
A manufacturer of an aftermarket part assumes the responsibility that the part will not adversely affect emissions performance. The manufacturer or rebuilder of the part must certify that use of the part will not result in a failure of the engine to comply with emissions regulations.

Maintenance

As the power equipment engine owner, you are responsible for completing all required maintenance listed in your owner's manual. Honda recommends that you retain all receipts covering maintenance on your power equipment engine, but Honda cannot deny warranty coverage solely for the lack of receipts or for your failure to ensure that all scheduled maintenance has been completed.

Follow the *MAINTENANCE SCHEDULE* on page 35.
Remember that this schedule is based on the assumption that your Honda engine product will be used for its designed purpose. Sustained high-load or high-temperature operation, or use in dusty conditions, will require more frequent service.

Air Index
(Models certified for sale in California)

An Air Index Information label is applied to engines certified to an emission durability time period in accordance with the requirements of the California Air Resources Board.

The bar graph is intended to provide you, our customer, the ability to compare the emissions performance of available engines. The lower the Air Index, the less pollution.

The durability description is intended to provide you with information relating to the engine's emission durability period. The descriptive term indicates the useful life period for the engine's emission control system. See your *Emission Control System Warranty* (see page 66) for additional information.

Descriptive Term	Applicable to Emissions Durability Period
Moderate	50 hours (0 – 80 cc, inclusive) 125 hours (greater than 80 cc)
Intermediate	125 hours (0 – 80 cc, inclusive) 250 hours (greater than 80 cc)
Extended	300 hours (0 – 80 cc, inclusive) 500 hours (greater than 80 cc) 1,000 hours (225 cc and greater)

Emission Control System Warranty

Your Honda Power Equipment engine is designed, built, and equipped to meet the U.S. EPA, Environment Canada, and California Air Resources Board (models certified for sale in California only) emission standard for spark ignited engines. American Honda Motor provides the emission warranty coverage for engines in the United States and its territories. Honda Canada provides the emission warranty for engines in the 13 provinces and territories of Canada.

Warranty Coverage

Honda Power Equipment engines certified to the U.S. EPA, Environment Canada, and State of California (models certified for sale in California only) emission regulations are covered by this warranty to be free from defects in materials and workmanship that may keep it from meeting the applicable U.S. EPA, CARB and Canadian emissions requirements for a minimum of 2 years or the length of the Honda Power Equipment Distributor's Limited Warranty, whichever is longer, from the original date of delivery to the retail purchaser. This warranty is transferable to each subsequent purchaser for the duration of the warranty period. Warranty repairs will be made without charge for diagnosis, parts, and labor. Information about how to make a warranty claim, as well as a description of how a claim can be made and/or how service can be provided, can be obtained by contacting an authorized Honda Power Equipment dealer or by contacting the following:

American Honda
Email: powerequipmentemissions@ahm.honda.com
Telephone: (888) 888-3139
Honda Canada
Telephone: (888) 946-6329

The covered components include all components whose failure would increase an engine's emissions of any regulated pollutant or evaporative emissions. A list of specific components can be found in the separately included emissions warranty statement.

Specific warranty terms, coverage, limitations, and manner of seeking warranty service are also set forth in the separately included emissions warranty statement. In addition, the emission warranty statement can also be found on the Honda Power equipment website or at the following link: http://powerequipment.honda.com/support/warranty

Specifications

Model	FC600K2
Type	A2, AN
Description code	FACC
Dry mass [weight]	128 lbs (58 kg)
Length	55.9 in (1,420 mm)
Width	26.4 in (670 mm)
Height	42.3 in (1,075 mm)
Engine model	GX160H2
Engine type	4-stroke, 1-cylinder, OHV, forced air cooled
Displacement	9.9 cu-in (163 cm^3)
Bore x Stroke	2.68 x 1.77 in (68.0 x 45.0 mm)
Ignition system	Transistor magneto
Spark plug	BPR5ES (NGK), W16EPR-U (DENSO)
Engine oil capacity	19 oz (0.58 L)
Fuel tank capacity	0.63 US gal (2.4 L)
Clutch	Belt tension
Transmission oil capacity	1.02 US qt (0.97 L)

Tune-up Specifications

ITEM	SPECIFICATION	MAINTENANCE
Spark plug gap	0.028 – 0.031 in (0.7 – 0.8 mm)	Refer to page 44.
Valve clearance	IN: 0.15±0.02 mm (cold) EX: 0.20±0.02 mm (cold)	See your servicing dealer.
Other specifications	No other adjustments needed.	

CONSUMER INFORMATION

Dealer Locator Information

To find an authorized Honda servicing dealer anywhere in the United States, visit our web site:
http://powerequipment.honda.com/dealer-locator

Honda Publications

Shop Manual
This manual covers complete maintenance and overhaul procedures. It is intended to be used by a skilled technician.
Available through your Honda dealer or visit
http://powerequipment.honda.com/support/shop-manuals

Parts Catalog
This manual provides complete, illustrated parts lists. Available through your Honda dealer.

Accessories Catalog
Your authorized Honda power equipment dealer offers a selection of accessories (optional equipment) to make your Tiller even more useful. Visit http://powerequipment.honda.com/tillers/accessories

Customer Service Information

Honda Power Equipment dealership personnel are trained professionals. They should be able to answer any question you may have. If you encounter a problem that your dealer does not solve to your satisfaction, please discuss it with the dealership's management. The Service Manager or General Manager can help. Almost all problems are solved in this way.

If you are dissatisfied with the decision made by the dealership's management, contact the Honda Power Equipment Customer Relations Office. You can write to:

American Honda Motor Co., Inc.
Power Equipment Division
Customer Relations Office
4900 Marconi Drive
Alpharetta, Georgia 30005-8847
Telephone: (770) 497– 6400 M-F, 9:00 am to 7:30 pm ET

When you write or call, please give us this information:

- Model and serial numbers (see page 61)
- Name of the dealer who sold the Tiller to you
- Name and address of the dealer who services your Tiller
- Date of purchase
- Your name, address, and telephone number
- A detailed description of the problem

MEMO

MEMO

MEMO

QUICK REFERENCE INFORMATION

Fuel	Type	Regular unleaded gasoline with an ethanol content of no more than 10% and a pump octane rating of 86 or higher (see page 37)
Engine Oil	Type	SAE 10 W-30, API SJ or later, for general use (see page 40) Maximum oil capacity: 19 oz (0.58 L)
Spark Plug	Type	BPR5ES (NGK), W16EPR-U (DENSO)
Maintenance	Before each use	Engine oil level Air filter Tiller is outside Clutch lever function Bolt and nut torque Cable and wires Engine operation Transmission oil
	First 20 hours	Change engine oil Adjust belt tension Adjust throttle cable
	Subsequent	Refer to maintenance schedule (see page 35)

HONDA

FC600
31V42606
00X31-V42-6060

EM4 AH 英 FM 0000.0000.00
Hi Printed in China