SennosM3 USER GUIDE

Intelligent Fermentation Monitoring System

Model: SENSTK-M3-01
Updated: September 3, 2026
Document PN: MANL-M3-01-00
Version: 3.1

TABLE OF CONTENTS

1 Before You Begin: Setup Overview 4

2 Introduction 5

2.1 About the SennosM3 System 5

2.2 System Architecture Overview 6

2.3 About This Guide 6

2.4 Intended Use & Operating Environment 7

2.5 Intended Audience 7

2.6 Safety Notices 7

3 System Components & Hardware Overview 8

3.1 Device Architecture 8

3.2 Hardware Modules 9

3.3 Integrated Measurement Parameters 11

3.4 Physical Interfaces 12

3.5 Display, Controls, and Indicators 13

3.6 Modular Assembly & Service Considerations 17

3.7 Hardware Specifications 18

4 Installation & Physical Setup 20

4.1 Pre-Installation Checklist 20

4.2 Initial Device Power-On 20

4.3 Wi-Fi & Connectivity Requirements 22

4.4 Power Requirements & Charging 26

4.5 Mounting the SennosM3 on a Tank 27

4.6 ISM Module Replacement Procedure 30

5 Getting Started with Sennoslink 37

5.1 What is Sennoslink? 37

5.2 Supported Platforms 37

5.3 User Roles & Permissions 38

5.4 Account Registration & Login 40

5.5 Navigating the Sennoslink Interface 41

5.6 Managing Devices in Sennoslink 43

6 Cleaning, Handling & Storage 45

6.1 Cleaning Safety Guidelines 45

6.2 Cleaning Procedures 46

6.3 Sensor Care & Storage Reservoir Usage 47
6.4 Storage Between Fermentations 48
6.5 Cleaning & Maintenance Warnings 49

7 Troubleshooting & Support 49
Issue Quick Reference 49
7.1 Troubleshooting Tools 50
7.2 Hardware Issues 53
7.3 Wi-Fi Connectivity Issues 57
7.4 Software Issues 61
7.5 Support Channels 62
7.6 Escalation & Service Guidance 64

8 Safety, Compliance & Specifications 64
8.1 Safety Warnings 66
8.2 Environmental & Operating Limits 68
8.3 Compliance & Certifications 69
8.4 Manufacturer Information 71

1 Before You Begin: Setup Overview

If you are setting up the SennosM3 for the first time, follow the steps below in order. Each step links to the section where you can find full instructions.

Step	What to Do	Where to Find It
1	Charge the device to 100%	Section 4.1 — Pre-Installation Checklist
2	Power on the device and verify all modules are tightened (no Sensor Error shown)	Section 4.2 — Initial Device Power-On
3	Connect the device to your Wi-Fi network using the Sennoslink mobile app	Section 4.3 — Connecting the SennosM3 to Wi-Fi
4	Mount the device on your fermentation vessel and confirm installation	Section 4.5 — Mounting on Tank & Installation Verification
5	Activate your Sennoslink account (first-time users only)	Section 5.4 — Account Registration & Login
6	Start a fermentation and assign your device to a tank	Section 5.6 — Device Assignment to Tanks; Sennoslink Platform Documentation

Already set up? Use the Table of Contents to navigate directly to what you need.

SENNOS

2 Introduction

2.1 About the SennosM3 System

SennosM3 is a modular fermentation monitoring system that provides fermentation operators with continuous, real-time visibility into fermentation conditions. The system combines intelligent hardware sensors with cloud-connected software to collect, transmit, and analyze fermentation data.

The SennosM3 installs directly on a fermentation vessel and continuously measures key fermentation parameters, transmitting data securely to the Sennos cloud platform via its own wireless connectivity. From there, **Sennoslink** makes that data available to your team, ensuring the SennosM3 is connected, configured, and delivering reliable operational visibility without analytical complexity. **SennosIQ™** then transforms that data into fermentation intelligence, adding automated benchmarking, intelligent alerting, and performance analytics to help operators maintain consistency, detect issues early, and optimize their processes.

Through the Sennos platform, fermentation operators and production teams can:

- Monitor active fermentations in real time
- Review historical fermentation data
- Configure alerts and notifications
- Compare performance across batches, tanks, and brands
- Support data-driven decisions throughout the fermentation lifecycle

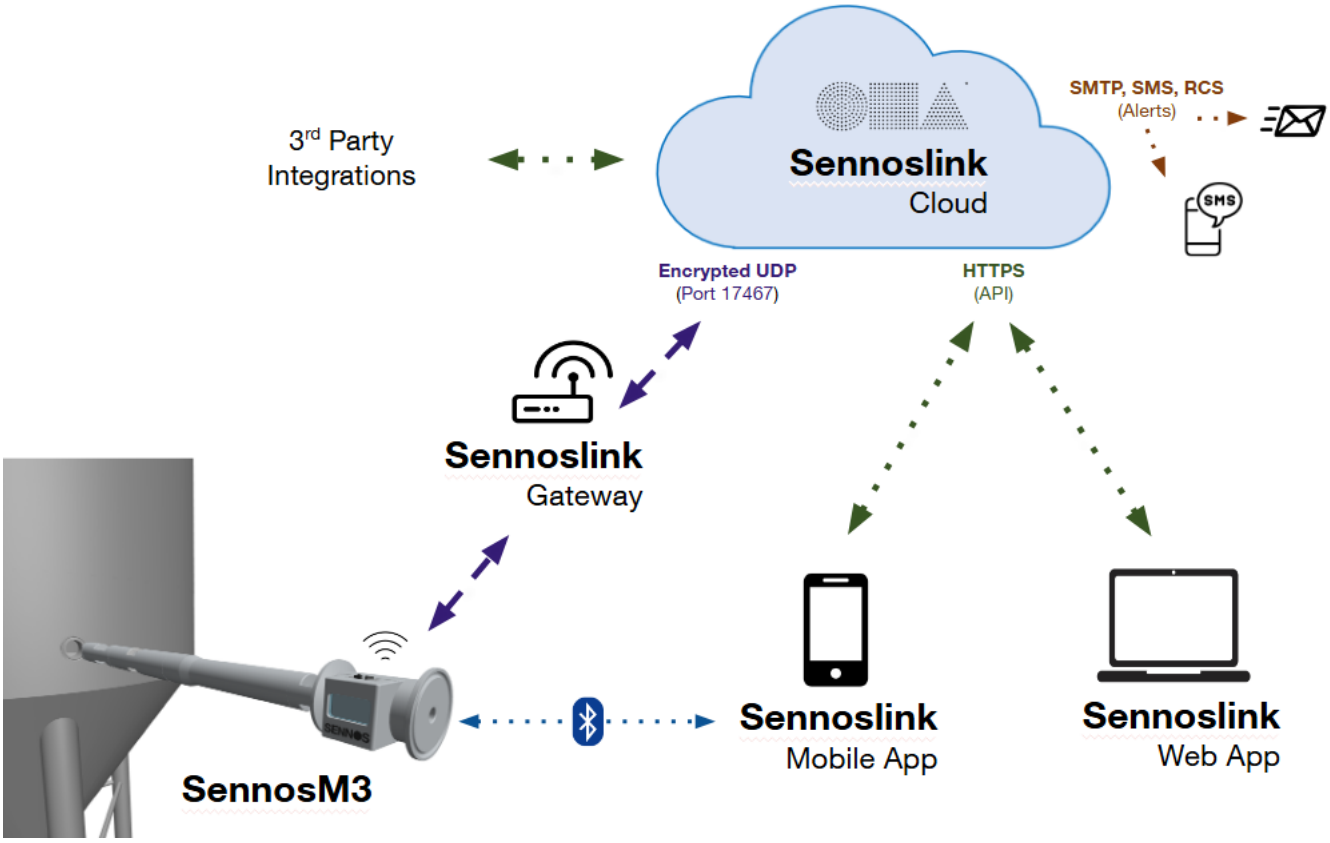

Figure 2 -1: Sennos System Diagram

SENNOS

2.2 System Architecture Overview

The Sennos platform consists of three integrated components: the SennosM3 hardware device, the Sennoslink application, and SennosIQ cloud analytics.

2.2.1 SennosM3 Hardware

The **SennosM3** is a modular fermentation probe composed of a control module and one or more interchangeable intelligent sensor modules (ISMs). It connects to a fermentation vessel via a standard 1.5-inch tri-clamp fitting and continuously transmits measurement data to the Sennos cloud. The hardware is designed for fermentation facility environments and supports routine cleaning and sanitation procedures.

2.2.2 Sennoslink

Sennoslink is the operational foundation of the Sennos platform, a cloud-based application accessible via web and mobile that ensures your SennosM3 is connected, configured, and delivering reliable data to your team. It provides complete system visibility and control, including real-time data display and storage, without analytical complexity. See Section 4.3.1 for supported network requirements.

2.2.3 SennosIQ

SennosIQ is an intelligence layer built on top of Sennoslink. It processes the fermentation data collected and stored by Sennoslink, adding automated benchmarking, intelligent alerting, and performance analytics. SennosIQ helps fermentation operators maintain consistency, detect issues early, and optimize fermentation processes.

2.3 About This Guide

This guide covers installation, operation, and maintenance of the SennosM3 fermentation monitoring system. It is structured to follow the typical deployment workflow: **hardware understanding → device setup & connectivity → Sennoslink account setup → fermentation monitoring → maintenance & support** .

Section	Description
Introduction	System overview, intended use, audience, and safety notices
System Components & Hardware Overview	Hardware device, sensor modules, display, controls, and specifications
Installation & Physical Setup	Pre-installation checklist, power-on, Wi-Fi setup and connectivity, tank mounting, and verification
Getting Started with Sennoslink	Software overview, account setup, interface navigation, and device management

SENNOS

Cleaning, Handling & Storage	Cleaning procedures, maintenance guidance, and storage instructions
Troubleshooting & Support	Common issues, diagnostics, and support procedures
Safety, Compliance & Specifications	Device operating limits, safety guidance, and regulatory information

This guide focuses on the SennosM3 hardware and its integration with the Sennos platform. Detailed instructions for advanced data analysis and platform administration are available in the Sennoslink user guide.

2.4 Intended Use & Operating Environment

The SennosM3 is designed for use in fermentation facilities to monitor conditions within production vessels. The system is intended to:

- Install on standard 1.5-inch tri-clamp fermentation vessel ports
- Operate within typical fermentation temperature and humidity conditions
- Transmit data via supported 2.4 GHz Wi-Fi networks

Use of the device outside documented operating conditions may affect measurement accuracy, device performance, or system reliability.

2.5 Intended Audience

This guide is intended for personnel responsible for fermentation monitoring and production operations, including:

- Fermentation professionals, including brewers, vintners, distillers, and cellar operators.
- Production and quality assurance teams
- Technical operators responsible for device setup and maintenance
- Administrators managing users, alerts, and fermentation data in the Sennos platform

This guide does not replace standard safety procedures or facility operating policies. Users must follow their organization's established sanitation, safety, and operational practices when working with fermentation equipment and chemicals.

2.6 Safety Notices

The SennosM3 must be operated within the limits defined in this guide. Do not use the device in a manner not specified by the manufacturer. For all safety warnings, operating limits, and compliance information, see Section 8 - Safety, Compliance & Specifications.

3 System Components & Hardware Overview

Figure 3-1. Sennos3 Modular Sensor Stack Assembly

The SennosM3 is a modular hardware device that collects fermentation measurements directly from a fermentation vessel. This chapter describes the physical device, its hardware components, and the interfaces used during installation and operation.

3.1 Device Architecture

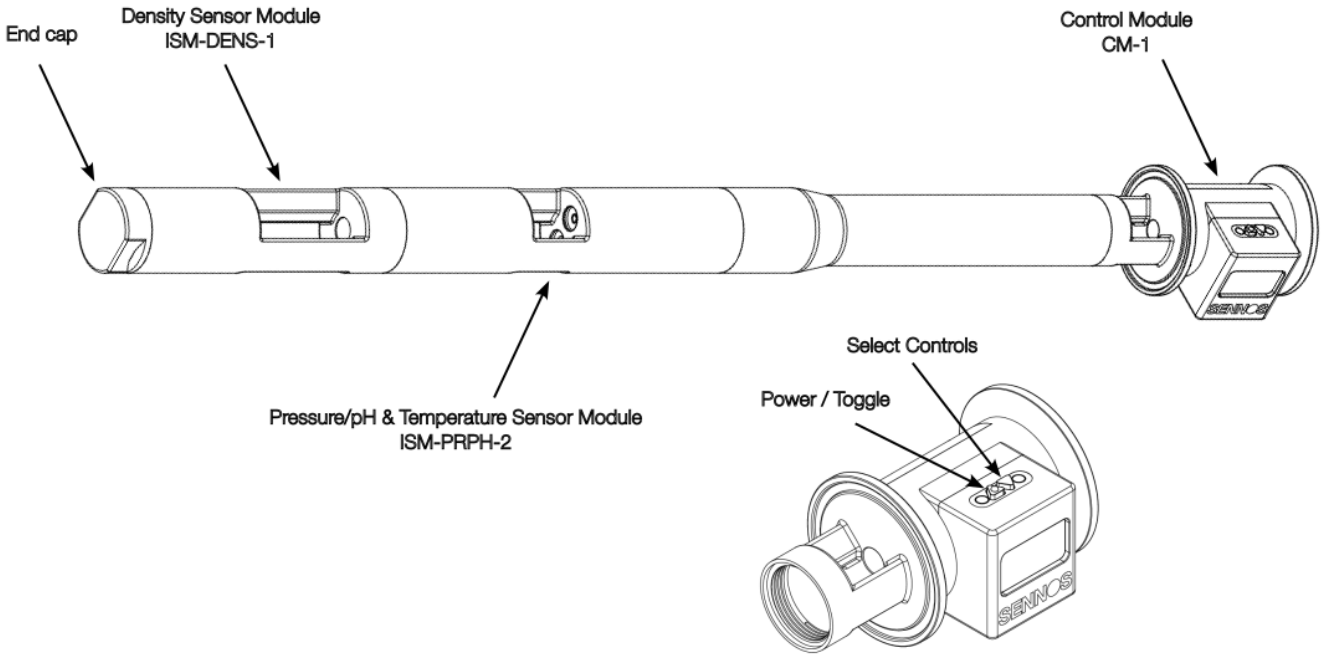

Figure 3-2. SennosM3 Sensor Stack Overview

The SennosM3 is built as a **modular sensor stack** consisting of a control module and one or more interchangeable intelligent sensor modules (ISMs). Each module performs a specific function within the system, while the control module coordinates power, data collection, and wireless communication across the entire stack.

The assembled device installs directly on a compatible fermentation vessel port and collects fermentation measurements continuously during operation. Depending on installed modules, the device can monitor temperature, pressure, pH, density, and other supported parameters.

Note:	Only user-serviceable module joints intended for assembly or reconfiguration should be adjusted. Some joints are factory-secured and must not be opened by the user.

SENNOS

3.2 Hardware Modules

The SennosM3 system is built from a set of modular hardware components. Each module connects to form a coordinated measurement stack inside the fermentation vessel. The Control Module serves as the system core, while Intelligent Sensor Modules (ISMs) extend its measurement capabilities.

3.2.1 Control Module (ISM -CM01)

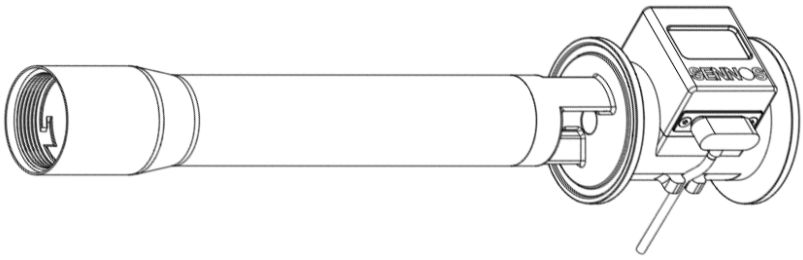

Figure 3-3. SennosM3 Control Module (ISM -CM01)

The **Control Module** is the operational core of the SennosM3 system. It manages local data processing, coordinates activity across all connected sensor modules, and handles wireless communication with the Sennos cloud platform.

The Control Module provides the following functions:

- Local device operation and system coordination
- Continuous data collection from all installed ISMs
- Wi-Fi and Bluetooth (BLE) wireless connectivity
- Edge processing
- Sennoslink connectivity for cloud data transmission
- Temporary offline data storage, uploaded automatically when connectivity is restored
- Magnetic charging support

The Control Module houses the device display, control buttons, optional battery, and all communication hardware. Two tank extension tube sizes are available to accommodate different vessel configurations:

- **6cm Extension** — For vessels where a shorter extension is required. Does not include an integrated battery.
- **12cm Extension** — For vessels where a longer extension is required. May include an integrated 13Wh battery, enabling cable-free operation.

The appropriate tube configuration depends on the vessel geometry and whether cable-free operation is needed. Contact Sennos Support if you are unsure which configuration is correct for your setup.

3.2.2 Pressure, pH & Temperature Sensor Module (ISM -PRPH-2)

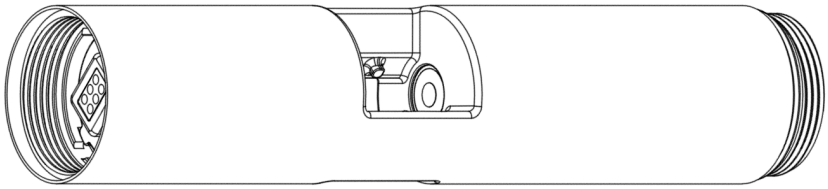

Figure 3-4. Pressure, pH, & Temperature Sensor Module (ISM -PRPH-2)

The **Pressure, pH & Temperature Sensor Module** is an intelligent sensor module designed for direct exposure to fermentation conditions inside the vessel. It provides continuous, simultaneous measurement of three critical fermentation parameters.

Measured parameters:

- pH — monitors yeast health, fermentation progress, and acid development throughout fermentation
- Pressure — supports safe CO_2 retention and release for natural carbonation and spunding
- Temperature — maintains consistent fermentation performance and flavor from pitch to conditioning

3.2.3 Density Sensor Module (ISM-DENS-1)

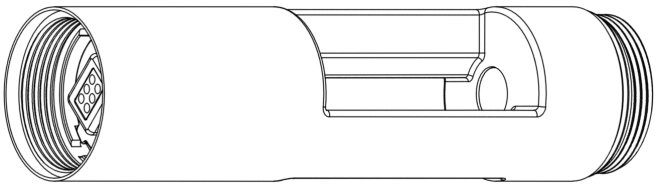

Figure 3-5. Density Sensor Module (ISM -DENS-1)

The **Density Sensor Module** is an inline sensor module that monitors fermentation progression through continuous gravity measurement. It tracks the concentration of sugars dissolved in the fermenting liquid, providing real-time data from pitch through to final packaging.

Measured parameters:

- Fermentation gravity (liquid density) — indicates fermentation progress and attenuation
- Sugar concentration — shows residual fermentable extract
- Alcohol content (derived) — estimates ABV based on density change

The module applies temperature compensation to gravity readings to ensure measurement accuracy across varying fermentation temperatures.

3.2.4 Intelligent Fusion Module (ISM-5MCR-1)

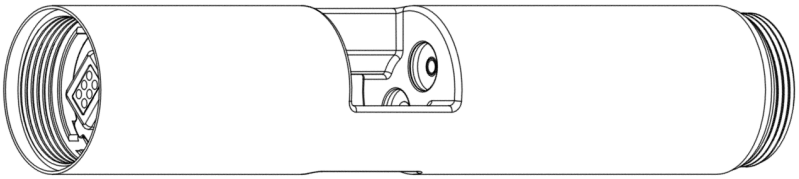

Figure 3-6. 5-Metric Multi-sensor Module (ISM-5MCR-1)

The Intelligent Fusion Module (IFM), combines pH, dissolved oxygen, conductivity, temperature, and pressure sensing in a single in-tank unit, delivering high-resolution visibility into the core conditions that drive fermentation. It reduces installation complexity by consolidating multiple probes into a single sensing point, while still providing the depth of data needed to understand yeast vitality, process hygiene, and tank conditions in real time.

Measured parameters:

- pH — tracks yeast health, fermentation progress, and acid development throughout fermentation.
- Dissolved oxygen (ppm) — monitors oxygen availability for yeast metabolism and supports healthy fermentation kinetics, rather than ultra-low packaging DO control.
- Conductivity (µS/cm) — reflects ionic changes related to process hygiene, cleaning effectiveness, and potential contamination events.
- Temperature (with compensation) — stabilizes pH, DO, and conductivity trends across changing fermentation temperatures.
- Pressure — supports safe CO_2 retention and release for natural carbonation and spunding.

3.3 Integrated Measurement Parameters

When the sensor stack is fully assembled and powered, all modules operate as a coordinated measurement system. Readings are collected continuously, processed by the control module, and transmitted Sennoslink. The full set of supported parameters is determined by which sensor modules are included in your SennosM3 device configuration.

Note:	Actual parameters available depend on which sensor modules are installed. Verify the installed module configuration before beginning a fermentation.

3.4 Physical Interfaces

3.4.1 Magnetic Charging Connector

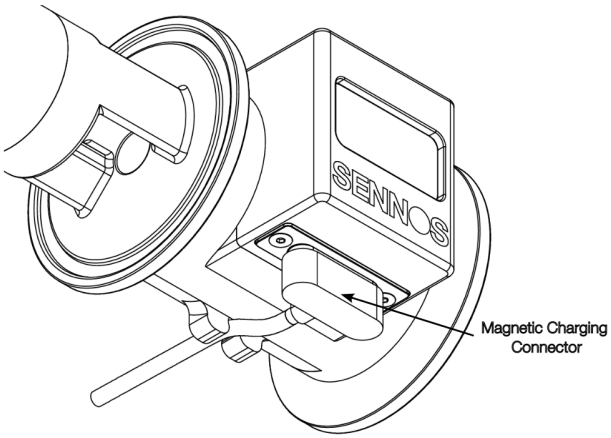

Figure 3 -7. Magnetic Charging Connector

The control module includes a magnetic charging port. The power cable connects magnetically to the device on one end and connects to the provided wall adapter on the other. This connection is used for:

- Charging the internal battery
- Providing continuous external power during fermentation monitoring when required

A cable retention clip on the underside of the control module allows the charging cable to be pressed in and routed securely along the bottom of the module. This keeps the cable tucked close to the device, reducing the risk of the cable snagging during operation or the magnetic connector coming loose.

See Section 4.4 for full power and charging requirements.

3.4.2 Tank Connection (Tri -Clamp Port)

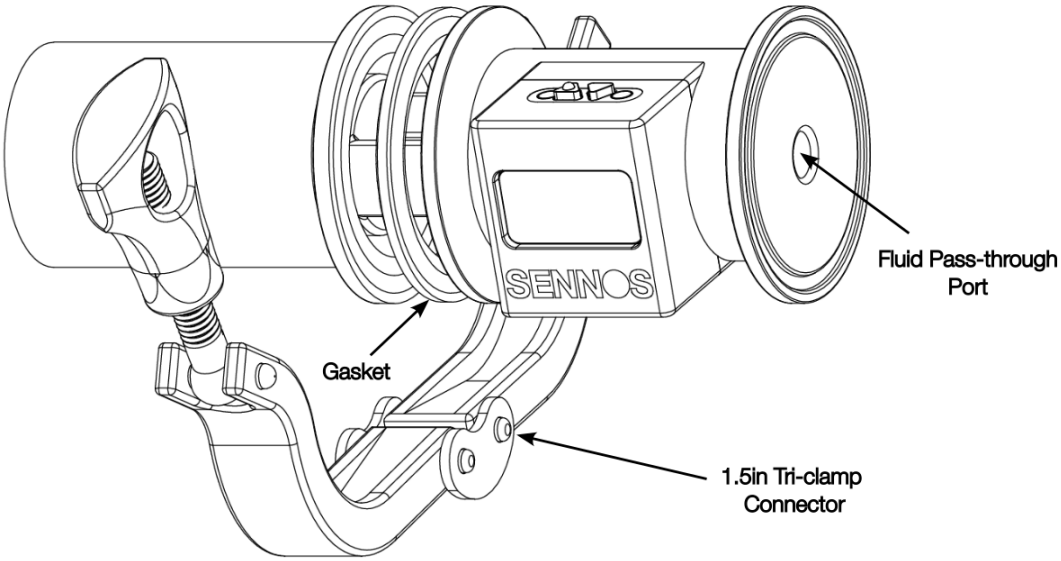

Figure 3 -8. 1.5in Tri -clamp Connector / Fluid Pass -through Port

The SennosM3 connects to the fermentation vessel using a compatible 1.5-inch tri-clamp connection. Requirements:

- Compatible 1.5-inch tri-clamp vessel port
- Minimum inner port diameter: 3.3 cm (1.3 in.)
- Port must be located above the cone and oriented horizontally

3.4.3 Fluid Pass -Through Port

Shown in Figure 3-8, the sensor stack includes an integrated fluid pass-through port that allows manual lab samples to be taken during an active fermentation without removing the device from the vessel. The port can be fitted with either a sanitized end cap or a sampling valve, depending on operational preference

3.5 Display, Controls, and Indicator s

The SennosM3 includes a built-in display and two physical control buttons. These allow users to confirm device status, view key identifiers, and perform basic operations without requiring access to the Sennoslink application.

Note:	All information shown on the device display is also available in the Sennoslink application. During normal operation, it is not necessary to manage device status directly from the physical display.

3.5.1 Display Screen

The display provides real-time device and connectivity status. It automatically enters a power-saving mode between sampling cycles, this is normal behavior. The full device (not just the screen) will wake when the Select button is pressed once, and the boot sequence will be visible before normal operation resumes.

Figure 3 -9. Display Screen

The display shows the following information:

Icon(s)	Display Element	Description
SennosM3-##	Device Name	Automatically assigned; matches the name shown in the Sennoslink application
	Bluetooth Status	Icon always visible when Bluetooth is enabled; changes appearance based on connection state (see Section 2.5.3)
	Wi-Fi Signal Strength	0–4 bar scale indicating current signal strength
	Cloud Connection Status	Arrow icon appears when the device is successfully connected to the Sennos cloud. This icon is located above the Wi-Fi signal icon.
	Battery Level	Current battery charge level
	Charging Indicator	Displayed when the device is connected to external power and charging
`Stack:`	Stack Status	Current operational state of the device (see below)
`IP:`	IP Address	Displayed after a successful Wi-Fi connection is established
`SN:`	Serial Number (SN)	Matches the serial number printed on the physical device; used for identification in Sennoslink

SENNOS

Stack status messages:

Status Message	Meaning
`Stack: Ready`	Device is powered on, properly configured, and ready to sample
`Stack: Sampling`	Device is actively taking a measurement
`Stack: No WiFi`	Device is not connected to a Wi-Fi network
`Stack: No Cloud`	Device is connected to Wi-Fi but not yet communicating with the Sennos cloud
`Stack: Sleeping`	Device is in power-saving sleep mode. The display shows the scheduled wake-up time in UTC. The device will resume normal sampling and cloud communication automatically at the displayed time. To wake the device manually before the scheduled time, press the Select button once.

Sensor Error

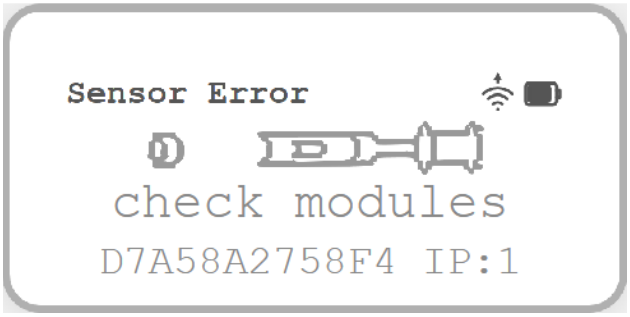

Figure 3 -10. Sensor Error / Check Modules

A Sensor Error screen appears when one or more sensor modules are not fully tightened. This error must be resolved before installation, see Section 4.2.3 – Verifying Module Connections for more information.

3.5.2 Control Buttons

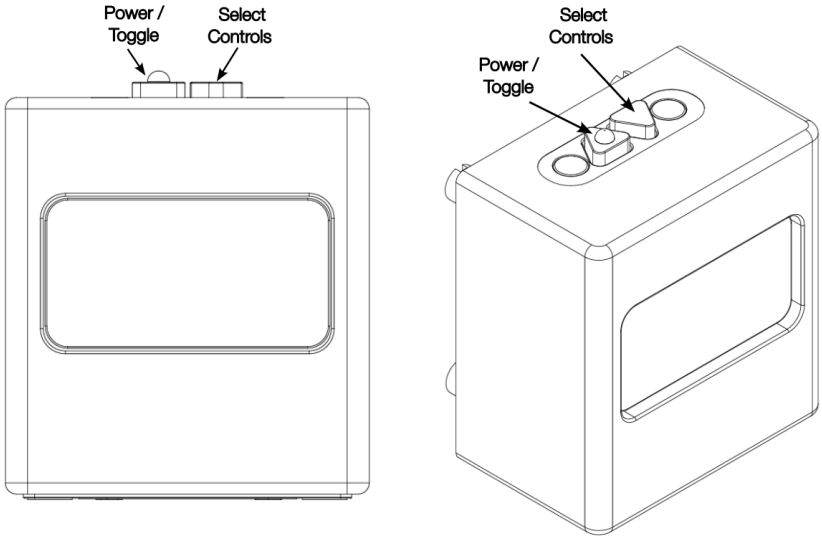

Figure 3 -11. Control Buttons

The device includes a **two -button interface** . The **power button** has a raised tactile indicator on its surface to allow identification by touch. The **select button** has no raised indicator.

Action	Procedure
Power ON	Press and hold the power button (closest to the tank when installed) for 4–5 seconds. Release when the screen illuminates. The serial number will appear during startup.
Power OFF	Press and hold the power button for 4–5 seconds.
Wake from power-saving mode	Press the select button once. The device will initiate a full boot process before resuming normal operation.

WARNING:	While in power-saving mode, the device is still actively monitoring. Pressing and HOLDING the power button while the probe is in power-saving mode will power it off completely, monitoring will stop and will not resume automatically. To check the display status between sampling cycles, use the SELECT button (single press) only.

SENNOS

3.5.3 Bluetooth Status Indicator

When Bluetooth is enabled, a Bluetooth icon is always visible on the display. The icon does not disappear, it changes appearance to reflect the current connection state.

Icon	State	Description
	Disabled	Bluetooth is not active; a disabled icon is shown
	Enabled / Advertising	Device is discoverable and ready to connect
	Connected	An active Bluetooth connection is established

Bluetooth is used during the following operations: Wi-Fi setup via the Sennoslink mobile application, mobile app connection to the SennosM3, and device log retrieval. During these operations, the icon will transition between states but will remain visible at all times.

3.6 Modular Assembly & Service Considerations

The SennosM3 sensor stack is assembled between the vessel connection point and the control module. Proper assembly is required for normal operation. During assembly:

- Ensure all user-serviceable modules are fully seated and properly aligned
- Tighten only the module connections intended for user assembly
- Do not attempt to loosen or adjust factory-secured joints
- Verify the device is fully assembled before installation on a vessel

Improperly assembled modules may result in device warnings, communication or measurement errors, or incomplete data collection.

WARNING:	Disassembly beyond user-serviceable joints is strongly discouraged and should only be performed when explicitly instructed by Sennos support personnel.

3.7 Hardware Specifications

3.7.1 Electrical Specifications

Specification	Value
Charging Input	5 V DC, 2 A
Battery Voltage	3.7 V DC
Battery Capacity	25.9 mAh
Charging Method	Magnetic connector on control module (supplied cable required)
Power Source	Internal battery and/or continuous external power

Note: The SennosM3 is designed to operate on battery power for the duration of typical fermentation runs. In longer or more demanding applications, it may be necessary to supply continuous external power. Use only the supplied power cable and adapter, or approved equivalents.

3.7.2 Environmental Operating Conditions

Parameter	Supported Range
Operating Temperature	−20°C to 55°C (−4°F to 131°F)
Charging Temperature	0°C to 45°C (32°F to 113°F)
Relative Humidity	10% to 95% RH, non-condensing
Altitude	−100 ft to 10,500 ft (−30 m to 3,200 m)

3.7.3 Network & Connectivity Requirements

Specification	Requirement
Wi-Fi Band	2.4 GHz only
Supported Networks	Standard and enterprise password-authenticated networks
Unsupported Networks	5 GHz, enterprise with certificate-based networks, captive portals
Stored Network Profiles	Up to 4; reconnects to previously connected network first, then by signal strength

3.7.4 Regulatory & Usage Classification

Attribute	Description
Intended Use	Indoor use only
Pollution Degree Rating	PD2
Device Classification	Fermentation monitoring system
Use Limitation	Must be operated as specified by the manufacturer

WARNING: If the equipment is used in a manner not specified by the manufacturer, the protection provided by the equipment may be impaired.

4 Installation & Physical Setup

This chapter provides step-by-step instructions for preparing, mounting, and verifying the SennosM3 installation on a fermentation vessel. Complete all steps in order before beginning a fermentation.

4.1 Pre-Installation Checklist

Complete the following steps before mounting the SennosM3 on a tank:

- **Retain original packaging.** Keep all packaging materials in case the device requires return or service.
- **Verify module connections.** Ensure all SennosM3 modules are fully tightened together. Loose modules cause inaccurate readings or device errors.
- **Remove the pH Storage Reservoir (shipping cover).** Remove, rinse, and retain the pH Storage Reservoir before installing on a fermentation vessel. This reservoir will be used later for storage purposes.
- **Charge the device to 100%.** Use the provided magnetic power cable and adapter. An extension cord may be required depending on tank location. See Section 3.3 for continuous power options.
- **Sanitize the probe and tri-clamp port.** Using your standard sanitization procedure, sanitize the SennosM3 sensor assembly and the tri-clamp port on the fermentation vessel before installation.

4.2 Initial Device Power-On

Complete the following steps to power on the SennosM3 and verify it is ready for installation.

Note:	Power on the device and complete all checks in this section before mounting on the tank. Module connections cannot be adjusted once the device is installed.

4.2.1 Power-On Procedure

1. **Ensure the device is fully charged or connected to external power** using the provided power cable and adapter.
2. Press and hold the **power button** (closest to the tank when installed) for 4–5 seconds.
3. Release the button when the device screen illuminates.

Figure 4-1: Initial Boot Screen

Upon successful power-on, the display shows the device serial number, battery level, Wi-Fi status (if

previously configured), and current device status.

4.2.2 Waking the Device from Power -Saving Mode

The display automatically enters power-saving mode between sampling cycles. The device remains active and continues monitoring in this state.

Action	Procedure
Wake the display	Press the Select button (the button **without** the raised tactile indicator) once. The device will complete a full boot sequence before resuming normal operation.
Power OFF	Press and hold the power button (the button with the raised tactile indicator) for 4–5 seconds.

Note:	Connecting the power cable does not wake the device from sleep mode, it only prevents the device from returning to sleep once it is already awake. To wake the device, press the Select button once, or wait for the next scheduled sampling cycle.

WARNING:	Always use the SELECT button (single press) to wake the device between sampling cycles. Pressing and HOLDING the power button while the device is in power-saving mode will power it off completely. Monitoring will stop and will not resume automatically.

4.2.3 Verifying Module Connections

After powering on, check the display for a **Sensor Error** screen. If one or more sensor modules are not fully tightened, the display will show a sensor diagram indicating which module is not detected, along with the message **Check Modules** .

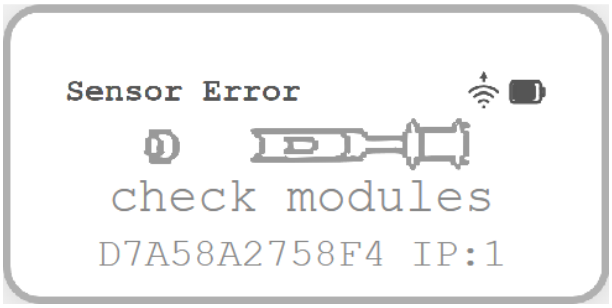

Figur e 4-2: Sensor Error

If a Sensor Error is displayed:

1. Power off the SennosM3.
2. Inspect all module connections and tighten any that are loose.

3. Power the device back on and confirm the Sensor Error no longer appears.

Note:	A power cycle is required to clear a Sensor Error after re-tightening modules. If the error persists after tightening and power cycling, see Section 7 – Troubleshooting & Support before proceeding with installation.

4.3 Wi -Fi & Connectivity Requirements

The SennosM3 requires a wireless network connection to transmit fermentation data to the Sennos cloud via Sennoslink. Proper network configuration is required before beginning a fermentation.

Note:	If this is not the first time connecting the device to Wi-Fi, connect it to external power before proceeding. After the initial Wi-Fi setup, the device will enter power-saving mode on battery and may go to sleep before configuration completes. Keeping it plugged in eliminates this issue.

4.3.1 Supported Network Types

Requirement	Detail
Wi-Fi band	2.4 GHz only — 5 GHz networks are not supported
Standard authentication	Password-protected networks using standard authentication are supported
Enterprise networks	Password-based enterprise networks are supported. Enterprise networks that use client-certificate authentication are not supported.
Unsupported configurations	Networks requiring captive portals, secondary login pages, or browser-based authentication are not supported
Stored network profiles	The device stores up to 4 Wi-Fi network profiles. It will always attempt to reconnect to a previously connected network first. For other stored networks, it will attempt connection in order of signal strength.

Note:	If your facility network uses a firewall, additional configuration may be required before the SennosM3 can reach the Sennos cloud. See Section 7.3.5 – Firewall Configuration for requirements.

4.3.2Wi -Fi Connection Process

Complete the following steps to connect the SennosM3 to a Wi-Fi network:

1. **Power on the SennosM3.**
   - Press and hold the power button (closest to the tank) for 4–5 seconds.
   - The Sennos logo appears first, followed by the device serial number once fully booted.

Note:	If this is not the first time connecting the device to Wi-Fi, connect it to external power before proceeding. After the initial Wi-Fi setup, the device will enter power-saving mode on battery and may go to sleep before configuration completes. Keeping it plugged in eliminates this issue.

2. **Open the Sennoslink mobile application.**
   - Log in to your Sennoslink account.
3. **Navigate to Devices.**
   - Tap the **Devices** tab in the app.
   - Tap the device card for the device you want to connect.
4. **Open Wi -Fi Manager.**
   - Select **Wi-Fi Manager** .
5. **Select or add a network.**
   - Choose an available network from the list, or
   - Select **Add Hidden Network** to enter an SSID manually.
6. **Enter credentials and connect.**
   - Enter the Wi-Fi password. Passwords are case-sensitive.
   - Tap **Connect** .
7. **Confirm connection.**
   - Upon successful connection, the device's IP address appears on the SennosM3 display.

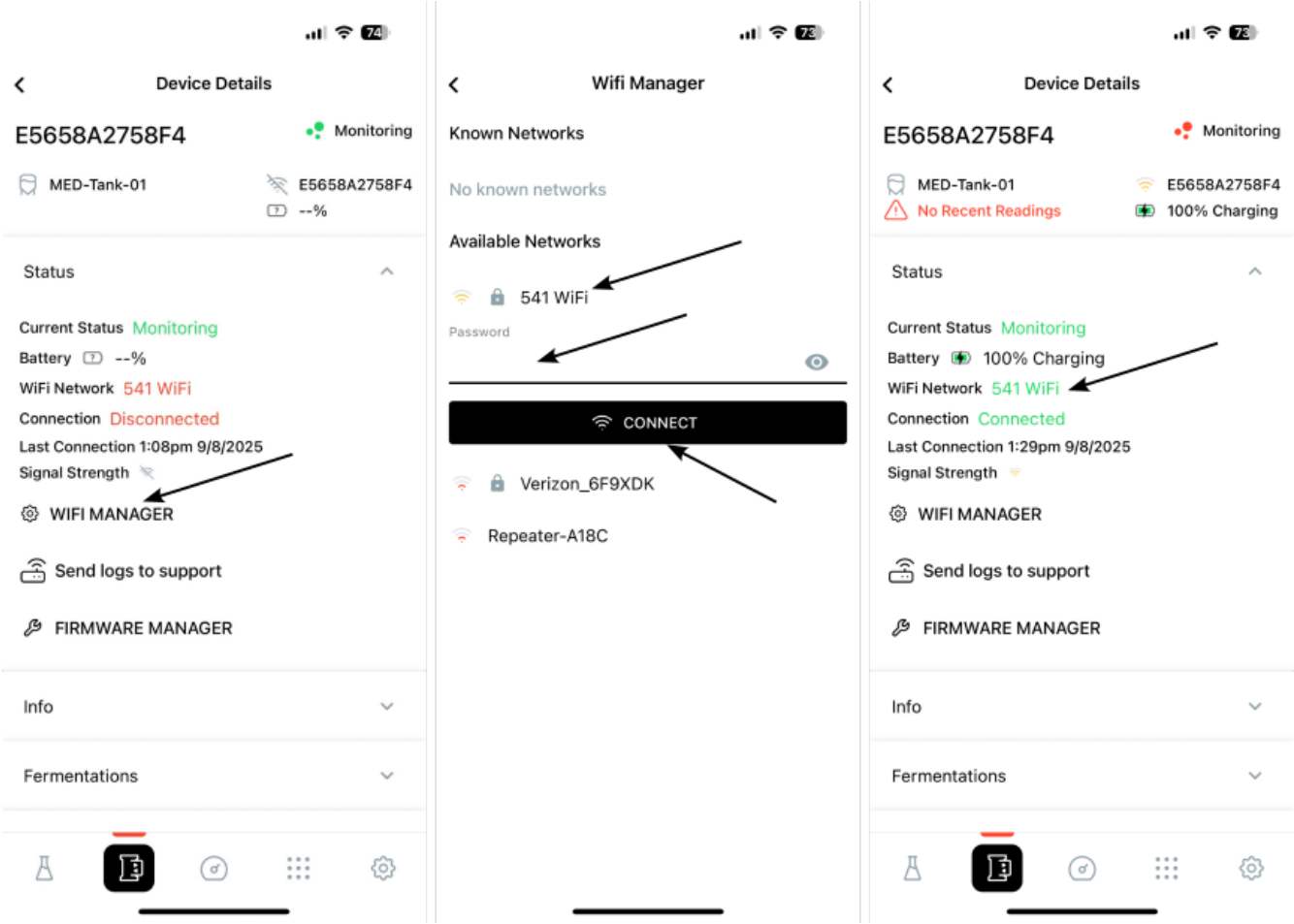

Figure 4 -1. Wi-Fi Connection Process

Note:	If you encounter connection issues during this process, see Chapter 7 – Troubleshooting & Support. The Sennoslink app will notify you when an update is available; keeping the app current is the first step in resolving most connection problems.

SENNOS

4.3.3 Confirming Cloud Connectivity

Once connected to Wi-Fi, confirm the following on the display before proceeding to tank installation:

Icon	Indicator	What to Look For
	Cloud connection icon	Arrow icon visible when successfully connected to the Sennos cloud.
	Wi-Fi signal strength	0–4 bars; verify active bars are shown
IP: 192.168.0.204 IP: na	IP address	Displayed on screen after a successful Wi-Fi connection is established

Note:	Network stability directly affects data transmission frequency and alert delivery. If you experience intermittent connectivity, use the connectivity test tool in Sennoslink to diagnose signal issues at your installation location.

4.3.4 Normal Operation

When the SennosM3 is installed on a fermentation vessel and connected to Wi-Fi, it continuously collects fermentation readings and transmits them to the Sennos cloud via Sennoslink. Data is associated with the active fermentation started in Sennoslink and is immediately accessible through the web and mobile applications. See Figure 2-1: Sennos System Diagram for visual representation.

4.3.5 Offline Data Storage

If the SennosM3 loses Wi-Fi connectivity during an active fermentation, it continues collecting readings and stores them internally, as long as the device remains powered on. Stored readings are uploaded to Sennoslink automatically when connectivity is restored.

Note:	The device can store up to approximately one week of offline readings. Data collection stops if the device loses power. If connectivity is lost for an extended period, keep the device plugged in to power to ensure readings continue uninterrupted.

4.3.6 Uploading After a Connectivity Gap

When the device reconnects to Wi-Fi after a period offline, it begins uploading stored readings. This upload is not instantaneous; the device transmits in intervals rather than continuously. To speed up the upload process, connect the device to external power. This prevents the device from entering power-saving mode between upload cycles and allows it to finish uploading all stored readings as quickly as possible.

Note:	Under normal conditions, the device keeps up with data uploads in real time. The

SENNOS

catch-up behavior described here applies only when the device has been offline for an extended period and has accumulated a backlog of stored readings.

4.4 Power Requirements & Charging

The SennosM3 contains an internal rechargeable battery sufficient for most fermentations. For long or critical fermentations, Sennos recommends operating the device connected to continuous external power or with a Sennos battery pack attached.

4.4.1 Power Input Requirements

Specification	Value
Charging Input	5 V DC, 2 A
Charging Connector	Magnetic connector on control module (supplied cable required)
Wall Adapter	Supplied 5 V, 2 A adapter

An extension cord may be required depending on tank location and facility layout.

4.4.2 Battery Operation

- Battery level is displayed on the device screen and in the Sennoslink application.
- A charging icon appears on the display when external power is connected.
- If battery power is low, the device may enter a sleep state to conserve power.
- Battery alerts can be configured in Sennoslink to notify users when the battery is low or critical.

Note: For long or critical fermentations, Sennos recommends operating the SennosM3 while connected to continuous external power or with a Sennos battery pack attached.

4.4.3 Charging Procedure

1. Connect the supplied magnetic power cable to the charging connector on the SennosM3 the cable can be secured by placing it in the cable retention clip.
2. Plug the cable into the provided wall adapter (5 V, 2 A).
3. Connect the adapter to a suitable AC power source.
4. Verify charging status using the battery and charging indicators on the display.

4.4.4 Charging Temperature Limits

Charge the device only within the following temperature range:

- Charging temperature: 0°C to 45°C (32°F to 113°F)

Charging outside this range is not recommended and may affect battery performance or longevity.

4.5 Mounting the SennosM3 on a Tank

4.5.1 Mounting Requirements

Before installing the SennosM3, verify the following:

- The fermenter has a **1.5-inch tri -clamp port** with a minimum inner diameter of 33 mm (1.3 in.)
- The selected port is located above the cone and oriented horizontally
- The fermenter has been cleaned and sanitized.

4.5.2 Installation Orientation

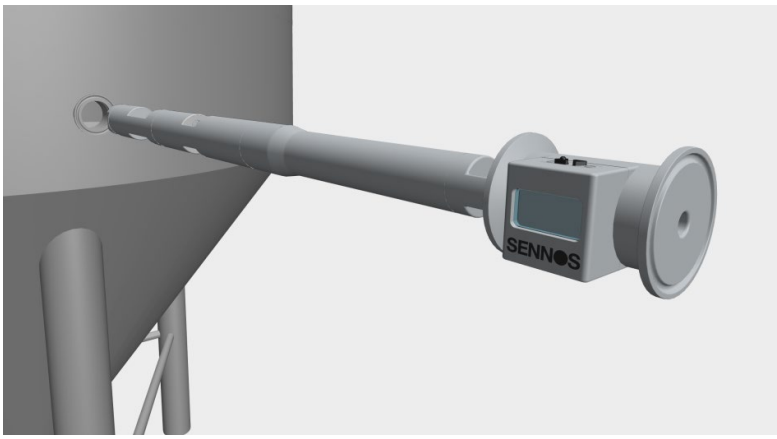

Figure 4 -1. Installation Orientation

The SennosM3 must be installed in the correct orientation for proper sensor function and display visibility:

- The display screen must face sideways
- The control buttons must be positioned above the display

4.5.3Mounting Procedure

1. Confirm that all sensor modules are fully tightened to the control module. 2. Sanitize the probe and tri-clamp port. 3. Place a sanitized gasket on the tri-clamp port fitting. 4. Insert the SennosM3 sensor stack into the selected tri-clamp port, ensuring correct orientation.	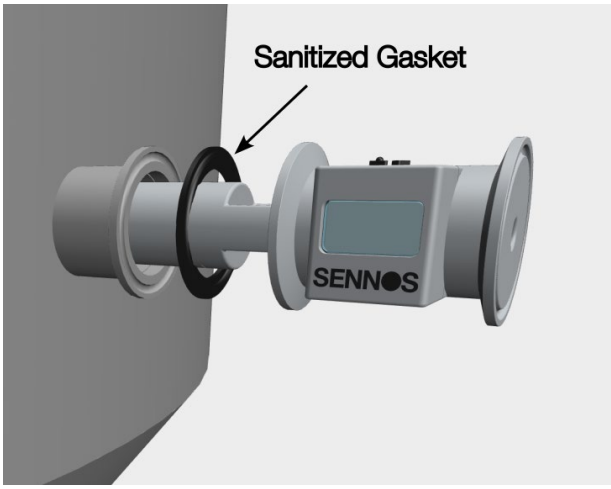
5. Secure the device with the tri-clamp.	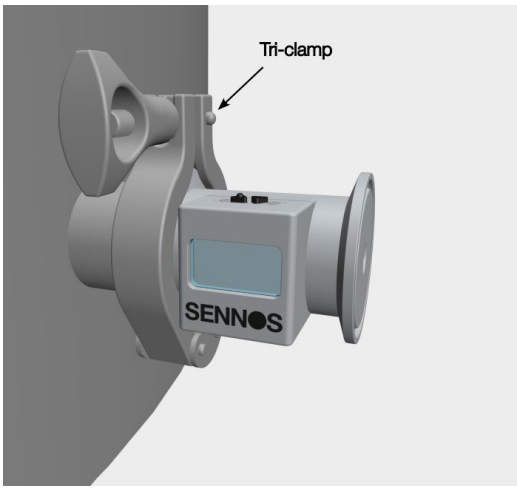
6. Attach one of the following: a. Attach a sanitized end cap to the fluid pass-through port. or	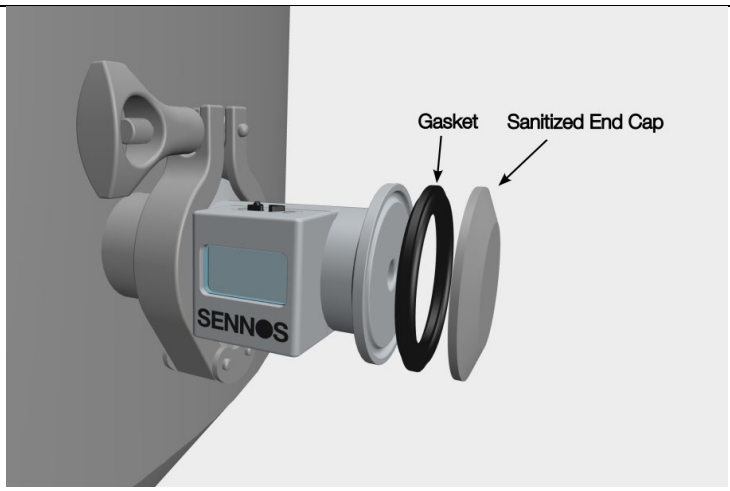

SENNOS

b. Attach a sampling valve to the fluid pass-through port. 7. Complete tank sanitization according to standard procedures.	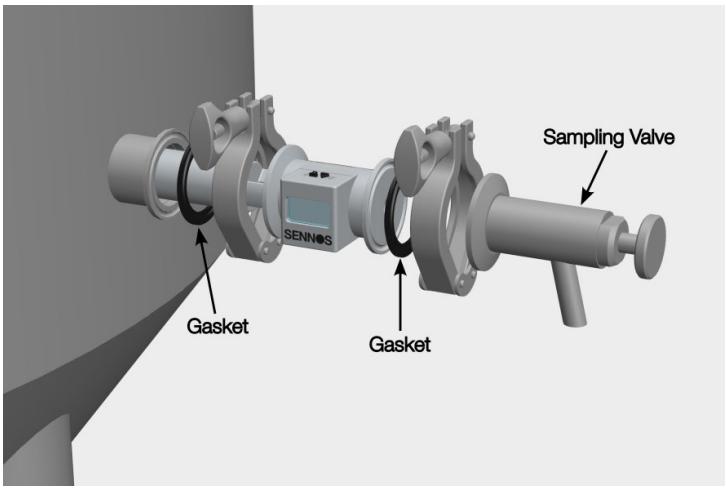

WARNING:	Any Sensor Error displayed on the device screen must be resolved before proceeding with installation. Loose or improperly seated modules can result in inaccurate readings or device errors. See Section 7.1.3 for troubleshooting steps.

4.5.4 Post -Installation Verification Checklist

After mounting, confirm each of the following:

- ☐ **Module integrity** - No Sensor Error screen is displayed.
- ☐ **Device name** - The name on the display matches the name shown in the Sennoslink application.
- ☐ **Wi-Fi signal** - The signal strength indicator shows active bars.
- ☐ **Cloud connection** - The cloud icon is visible on the display.
- ☐ **Stack status** - Ready or Monitoring is shown on the display.
- ☐ **IP address** - An IP address is displayed (confirms active Wi-Fi connection).
- ☐ **Power** - Charging icon is shown if connected to external power; battery level shows adequate charge if on battery.
- ☐ **App visibility** - Device appears online in the Devices section of the Sennoslink application with no status errors.

Note:	The display may enter power-saving mode when idle. Press the Select button once to wake it if needed.

Once all checklist items are confirmed with no warnings present, the SennosM3 is correctly installed and ready to begin fermentation monitoring.

SENNOS

4.6 ISM Module Replacement Procedure

Follow this procedure when installing a new ISM or replacing an existing module for service, upgrade, or maintenance. Proper installation is required for accurate measurements and reliable operation.

WARNING:	Always power off and clean the SennosM3 before opening the sensor stack. Failure to do so may result in device errors, inaccurate readings, or contamination of the module connections.

4.6.1 Understanding the Module Stack

The SennosM3 consists of two factory-sealed assemblies connected by serviceable connection points. It is critical to understand which parts of the device are user-serviceable before proceeding.

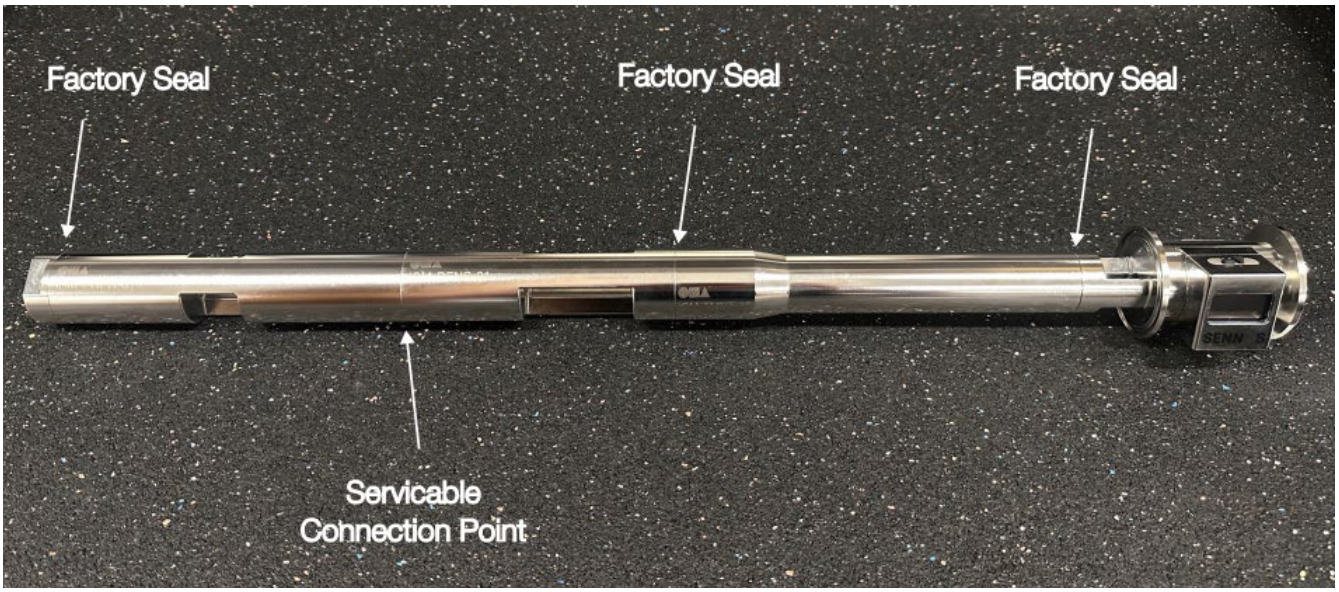

Figure 4 -2: SennosM3 Serviceable Connections and Factory Seals

Factory-sealed assemblies — do not separate:

- **Top Assembly** — Control Module (CM) and Gravity/Density Module (ISM-DENS)
- **Bottom Assembly** — Intelligent Fusion Module (ISM-5MCR) and Endcap

ISM modules may only be installed or removed at the designated serviceable connection points:

- Between the Density Module and the first ISM module
- Between ISM modules, when a second ISM is installed

WARNING:	Do not separate factory-sealed assemblies. If either assembly requires service, return it to Sennos as a complete unit.

SENNOS

4.6.2 Preparing for ISM Service

Before performing any ISM removal, installation, or replacement, gather the following materials:

- SennosM3 device
- New ISM module (if installing or replacing)
- Replacement gaskets (included with new ISM modules)
- Access to the Sennoslink mobile app, or access to email/SMS for removal confirmation

Then complete the following preparation steps:

- **Power off** the SennosM3.
- Remove the device from the fermentation vessel.
- **Clean the device** after removing it from the vessel and before opening the sensor stack, see Section 6 for approved cleaning procedures.
- Work on a clean, dry surface.
- Inspect gaskets for damage or debris before reuse.

4.6.3 Removing an ISM

1. Power off the SennosM3. Press and hold the Power button until the display turns off, then wait 10 seconds for complete shutdown.
2. Remove the device from the vessel if still installed.
3. Hold the top assembly steady and unscrew the bottom assembly by rotating counterclockwise. Set the bottom assembly aside.
4. Unscrew the ISM module from the top assembly by rotating counterclockwise. Set the module aside.

5. Remove the gaskets from both exposed connection ports at the separated serviceable connection point. Discard the old gaskets.

6. Install a fresh gasket on the exposed connection port of the upper module.
7. Reconnect the bottom assembly, align it with the exposed connection port, screw clockwise, and hand-tighten until snug. Do not use tools.

8. Inspect all sealing surfaces for residue or damage.
9. Store the removed module according to the cleaning and storage guidance in Section 6.

What to Expect After Removing an ISM

When you power on the SennosM3 after removing a module, the device will detect the missing module and require confirmation. On the device display, the name of the missing ISM module will appear and the display will prompt: *"Confirm removal in App."*

Sennoslink will also send a notification via app, email, or SMS. Confirmation is required to update the device configuration in Sennoslink.

To confirm the removal in the Sennoslink app:

1. Open the Sennoslink mobile app and navigate to your device.
2. A banner will appear: **"ISM removal detected."**
3. Tap **Confirm Removal** if the removal was intentional. The device will update its configuration.
4. If you did **not** intentionally remove the module, tap **Something's Wrong.** This keeps the alert active so you can investigate. Check that all modules are properly connected and contact Sennos Support if the issue persists.

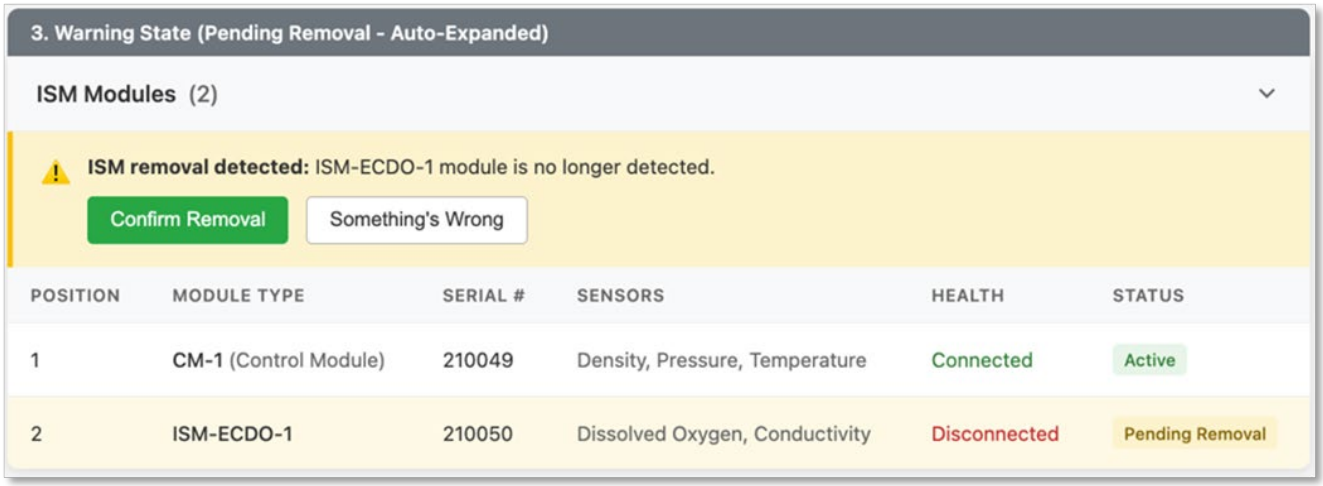

To confirm via email or SMS:

- Click **Confirm Removal** in the notification email, or
- Reply **CONFIRM** to the SMS message.

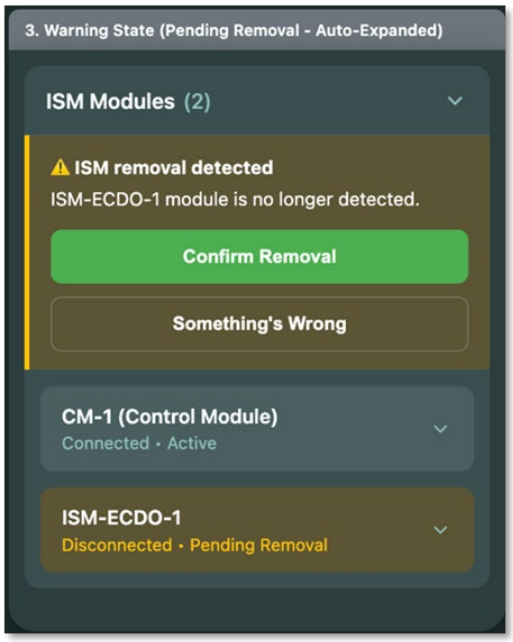

Note:	If the new module does not appear in Sennoslink after 5 minutes following installation, power cycle the device and check that all connections are secure.

SENNOS

4.6.4 Installing an ISM

Note:	The following procedure uses the ISM-ECDO (Dissolved Oxygen & Conductivity) module as an example, but the same steps apply to all ISM module types. If installing a second ISM module, repeat the gasket and threading procedure at the next available serviceable connection point.

1. Power off the SennosM3. Press and hold the Power button until the display turns off, then wait 10 seconds for complete shutdown.
2. Hold the top assembly steady and unscrew the bottom assembly by rotating counterclockwise. Set the bottom assembly aside.

3. Remove the existing gasket from the open connection port at the serviceable connection point. Discard the old gasket.

4. Take a new gasket from the ISM packaging and place it on the exposed connection port of the upper module. Ensure the gasket is seated evenly with no gaps.
5. Align the ISM module with the exposed connection port and screw it on by rotating clockwise. Hand-tighten until snug, do not use tools.
6. Place a second new gasket on the exposed connection port at the lower serviceable connection point. Ensure the gasket is seated evenly with no gaps.

7. Align the bottom assembly with the exposed connection port, screw clockwise, and hand-tighten until snug, do not use tools.

8. Power on the SennosM3 by pressing the Power button. The device will boot and automatically detect the new module.

Note:	Ensure all components are hand-tightened securely. Loose modules will trigger connection warnings or measurement errors.

What to Expect After Installing an ISM

When the SennosM3 powers on, it will automatically detect and accept the new ISM module, no confirmation is required. Within a few minutes, the new sensors will appear in your Sennoslink dashboard.

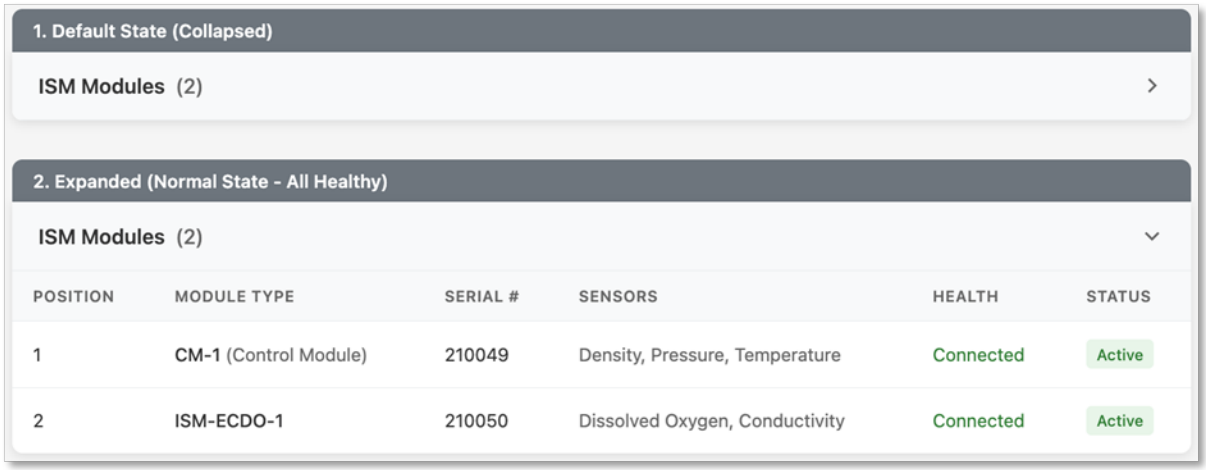

4.6.5Replacing an ISM

To replace an ISM, follow the removal procedure in Section 4.6.2 and then the installation procedure in Section 4.6.3.

Note:	You can install the new module before confirming the removal of the old one. Sennoslink will process both changes, the removal confirmation first, then the automatic acceptance of the new module.

If you are returning a faulty module to Sennos, retain the packaging from the replacement ISM, it can be used to safely ship the removed module back. Contact Sennos Support for return instructions and a return authorization before shipping.

Quick Reference

Action	Confirmation Required?	What Happens
Install new ISM	No	Auto-detected and activated
Remove ISM	Yes	App, email, or SMS confirmation required
Replace ISM	Yes (for removal only)	Confirm old removal; new module auto-detected

4.6.6Post -Replacement Confirmation

After powering on the device following any module change, confirm that no **Sensor Error** is displayed on the SennosM3. This confirms the module is properly seated and electrically connected.

To verify the configuration in Sennoslink:

1. Open the Sennoslink mobile or web application.
2. Navigate to the **Devices** section and open the **Device Details** page for your SennosM3.
3. Confirm that the ISM Modules list matches the physical sensor stack configuration, with all expected modules showing a status of **Connected — Active.**

Note:	If a module was removed and the device detects it as missing, Sennoslink will prompt you to confirm whether the removal was intentional. Respond to this prompt to ensure the device configuration in Sennoslink matches the physical stack. See Section 4.6.2 for full confirmation instruction

If issues persist after replacement, such as a recurring Sensor Error after tightening and power-cycling, or the device not appearing correctly in Sennoslink, see Section 7.1.4 - ISM Replacement Issues for further diagnostic steps, or contact Sennos Support.

5 Getting Started with Sennoslink

5.1 What is Sennoslink?

Sennoslink is Sennos' cloud-connected software system for fermentation data collection, visualization, and analysis. When a SennosM3 is installed on a tank and connected to the internet, it securely transmits fermentation data to the Sennos cloud, where it is accessible through the Sennoslink web and mobile applications.

Through Sennoslink, users can:

- Start and end fermentations
- View real-time and historical fermentation data
- Monitor key fermentation parameters, including density, pH, temperature, and pressure (as supported by installed sensor modules)
- Add manual lab readings and notes
- Configure static, dynamic, and event-based alerts
- Manage brands, tanks, devices, and users
- Review fermentation performance using dashboards, comparisons, and benchmarking tools

Sennoslink uses role-based access control, allowing different levels of visibility and control depending on each user's assigned role. Certain features, such as company-wide settings, user management, and advanced analytics, are restricted to administrative roles or are available only on the web application.

5.2 Supported Platforms

Sennoslink is accessible through both web and mobile platforms. The two platforms share core functionality but differ in available features. The table below summarizes the primary capabilities of each.

Feature	Web Application	Mobile Application
Start and end fermentations	Supported	Supported
Configure & manage device Wi-Fi	Not available	**Required** for initial Wi-Fi setup of the SennosM3
Add manual lab data and notes	Supported	Supported
Monitor real-time sensor readings	Supported	Supported
Manage users, contacts & roles	Supported (Admin only)	Not available
Configure alerts, benchmarks & KPIs	Supported	Not available
Manage tanks, brands & locations	Supported (add & manage)	Basic brand details only — alerts, KPIs, graphs, and

		benchmarks require web
Manage devices	Manage only — devices are provisioned by Sennos and appear automatically	Manage only
Company Profile & tenant settings	Supported (Admin only)	Not available
View historical fermentation data	Supported	Supported

Note:	The mobile application is required for Wi-Fi configuration of the SennosM3 and for certain device-level setup workflows. Some administrative and advanced configuration features are available only through the web application.

5.3 User Roles & Permissions

Sennoslink uses role-based access control to manage what actions users can perform. Roles are assigned when users are invited and can be modified by account administrators.

Role	Access & Capabilities
Viewer	Can view all dashboard pages except Manage Users and Company Profile. Cannot start or end fermentations, control devices, or modify settings.
Operator	Can view all dashboard pages except Manage Users. Can start, pause, resume, and end fermentations. Can control devices and add manual readings. Cannot manage users or modify company-wide settings.
Admin	Includes all Operator permissions. Can invite users and contacts, assign and modify roles, and access and modify the Company Profile page, including company-wide settings.
Admin and Data Access	Includes all Admin permissions. Additionally grants access to the Sennos API for programmatic data retrieval. This role is typically used for system integrations. Contact Sennos Support to enable, this cannot be assigned by an account administrator.
Viewer and Data Access	Includes all Viewer permissions, plus access to the Sennos API for data retrieval. Contact Sennos Support to enable.
Disabled	User account is deactivated. The user can no longer log in to Sennoslink. Administrators can disable users directly from the Manage Users page.

Note:	Data access roles allow users to retrieve fermentation data programmatically via the Sennos API. These roles require Sennos Support to assign and cannot be granted by an account administrator. For more information on data access and API usage, contact

Sennos Support for assistance.

SENNOS

5.3.1 Contacts (Non -User Access)

Contacts can be added to the system to receive alert notifications without being granted access to Sennoslink. Contacts are commonly used for operational or support personnel, such as cellar staff or IT contacts, who need alert notifications but do not require system access.

Contacts can	Contacts cannot
Receive alert notifications via email or text message	Log in to Sennoslink (web or mobile)
	View fermentation data
	Modify any system settings

5.4 Account Registration & Login

Access to Sennoslink requires an active user account associated with your organization.

5.4.1 Account Invitation

Accounts are created through an invitation process:

- **First account setup:** When your organization is first onboarded to Sennoslink, Sennos Support sends an invitation to the designated primary contact.
- **Subsequent users:** Once the first Admin account is established, that administrator can invite additional team members directly from the Manage Users page in Sennoslink — no Sennos Support involvement is required.
- **Data access roles:** Exception — assigning Admin and Data Access or Viewer and Data Access roles requires Sennos Support. Administrators cannot grant these roles themselves.

The invitation email contains a secure activation link valid for 24 hours. If the link has expired or the email cannot be located (check spam folders), contact Sennos Support to request a new invitation.

5.4.2 Account Activation

To activate a Sennoslink account:

1. Open the invitation email and select the activation link.
2. Follow the on-screen instructions to set a password and confirm account details.
3. Complete the activation process to enable access.

Note:	The activation link opens the Sennoslink web application — this is true even if you open the email on a mobile device (it will open in a mobile browser, not the Sennoslink mobile app). Once your account is activated, download the Sennoslink mobile app separately and log in using your new credentials.

5.4.3 Logging In

After activation, log in at the Sennoslink login page using your registered email address and password. The same credentials are used across both the web application and the Sennoslink mobile app.

Users are encouraged to bookmark the login page for convenient future access.

5.4.4 Account Assistance

If you experience issues with account access, activation, or login:

- Verify the invitation email has not expired (links are valid for 24 hours)
- Confirm correct email address and password
- Check spam or junk folders for the invitation email
- Contact Sennos Support to resend an invitation or resolve access issues

5.5 Navigating the Sennoslink Interface

Sennoslink is organized into distinct sections accessible through the navigation menu. The web and mobile applications share the same core sections but differ in layout and available features, the web application uses a left-hand sidebar while the mobile app uses a bottom navigation bar.

Navigation between sections does not interrupt active fermentations or data collection. The following is a high-level overview of each section. For detailed guidance on using specific features, refer to the Sennoslink user guide.

Dashboard	Primary operational overview. Shows active fermentations, current sensor readings, alert status, device connectivity, and recently completed fermentations.
Fermentations	Access all active, completed, and historical fermentations. Start and end fermentations, view data and graphs, add manual readings, and compare batches.

Devices	View status of all connected SennosM3 devices, including tank assignment, Wi-Fi connectivity, power status, and battery level.
Brands	Create and manage brands, define benchmarks, configure alerts, and review brand-level analytics. Full brand analytics (KPIs, benchmarks, graphs) are available on web only.
Tanks	Add tanks, assign devices to tanks, and manage tank metadata.
Locations	Define fermentation production locations associated with tanks and fermentations.
Manage Users (Admin, web only)	Invite users, assign roles, and manage user access levels.
Company Profile (Admin, web only)	Company-wide configuration including compensation preferences, KPI category management, and in-house yeast culture definitions.
My Profile	Manage personal account settings: contact information, password, time zone and unit preferences, notification preferences, and contacts.
Help	Access support contact information and links to current documentation, including the latest user guides and reference materials.

5.5.1 Page Interaction and Data Display

Across the Sennoslink interface:

- Graphs can be expanded and minimized
- Data tables can be filtered by time interval or data type
- Alerts and thresholds can be reviewed and adjusted where permitted by role
- Navigation between pages does not interrupt data collection or device operation

For detailed instructions on using each section, refer to the Sennoslink Platform Documentation.

5.6 Managing Devices in Sennoslink

The **Devices** section of Sennoslink provides centralized visibility into all SennosM3 devices associated with an account. From here, users can monitor device status, confirm tank assignments, and verify readiness for fermentation monitoring.

5.6.1 Devices Page Overview

The Devices page displays a list of all SennosM3 units registered to the account. For each device, users can view:

- Device name
- Current tank assignment
- Wi-Fi connection status
- Battery level and power status

Note:	The Devices page is for monitoring and administrative awareness. Physical installation, Wi-Fi setup, and cleaning procedures are covered in Sections 3, 3.4, and 6 respectively.

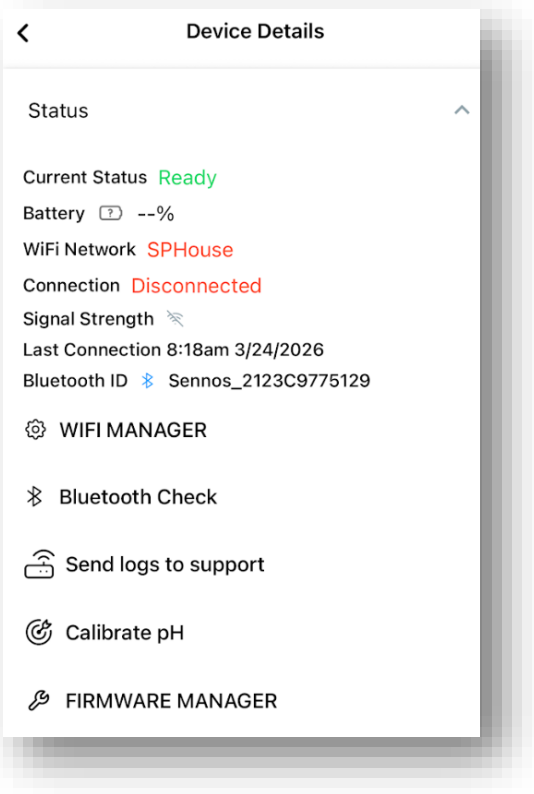

Figure 5-1. Device Details

5.6.2 Device Assignment to Tanks

Before a fermentation can be started, the SennosM3 must be associated with a tank in Sennoslink. Each device can be assigned to one tank at a time.

Tank assignment can be done in either of the following ways:

- **Ahead of time:** Assign the device to a tank from the Devices page in Sennoslink before beginning a fermentation.
- **At fermentation start:** Select the tank directly from the fermentation start screen in the Sennoslink mobile app.

Note:	The Devices page is for monitoring and administrative awareness. Physical installation, Wi-Fi setup, and cleaning procedures are covered in Sections 3, 3.4, and 6 respectively.

5.6.3 Power Readiness Before Fermentation

For reliable fermentation monitoring, the SennosM3 should be fully charged to 100% before installation on a vessel. There is a meaningful difference in runtime between 99% and 100% charge.

Battery level is shown as a percentage in the Sennoslink mobile app (on the device detail page) and as a bar indicator in the web application. The device display shows a charge icon when connected to external power.

Note:	For long or critical fermentations, Sennos recommends connecting the device to continuous external power during the fermentation. A Sennos battery pack is also available as an alternative to wall power, contact your Customer Engagement Manager or Sennos Support for details.

5.6.4 Device Status Awareness

The Devices page provides at-a-glance visibility into potential issues without requiring physical access to the hardware, including:

- Loss of Wi-Fi connectivity
- Low battery — alerts can be configured in Sennoslink to notify users when battery reaches low (*~70%*) or critical (*~5–10%*) levels
- Devices not yet assigned to a tank

This view supports proactive management across multiple tanks and locations.

6 Cleaning, Handling & Storage

Proper cleaning, handling, and storage of the SennosM3 are essential for accurate measurements, sensor performance, and device longevity. The SennosM3 is designed for use in wet fermentation environments, but must be cleaned and stored according to the procedures in this chapter.

Clean the device after removal from a fermenter and before storage or reinstallation. Sanitize the device as the final step before installing it on a vessel, cleaning and sanitizing are separate steps. Cleaning procedures apply to the sensor assembly and fluid pass-through port only; **the display and control module must not be submerged.**

When the SennosM3 is not installed on a fermenter, the **pH and dissolved oxygen (DO) sensors** must be kept hydrated. Use the Sennos storage reservoir to maintain hydration during storage between fermentations.

6.1 Cleaning Safety Guidelines

The following safety guidelines apply to all cleaning and maintenance activities involving the SennosM3:

Parameter	Limit / Requirement
Maximum device operating temperature	55°C (131°F)
Maximum cleaning solution temperature	60°C (140°F)
Approved cleaners	Non-caustic cleaners only
Recommended cleaners	Cell-R-Mastr or PBW
Submersion	Sensor assembly only, do not submerge the display or control module
Device state during cleaning	Powered off
Alternative cleaning agents	Contact Sennos Support or your Customer Engagement Manager before using any cleaner not listed above

Note: The device operating limit (55°C) and the maximum cleaning solution temperature (60°C) are different values. The solution may be warmer than the device limit, but contact with the device should remain within the device's rated operating range. Do not expose the device to prolonged heat above 55°C.

WARNING: If the SennosM3 is used or cleaned in a manner not specified by the manufacturer,

the protection provided by the equipment may be impaired.

6.2 Cleaning Procedures

Clean the SennosM3 after every removal from a fermentation vessel. If the device will be reinstalled on another fermenter the same day, proceed directly to sanitization after cleaning. If it will be stored, follow the storage procedures in Section 6.4.

Note:	Clean at end of use. Sanitize before reinstallation. These are separate steps — a clean device still requires sanitizing before it is installed on a vessel.

6.2.1 Preparation

Before beginning the cleaning process:

- **Power off** the SennosM3 before beginning cleaning.
- Remove the device from the fermentation vessel.
- **Do not submerge** the display screen or control module housing at any point during cleaning.

6.2.2 Cleaning Steps

1. **Rinse the device.** Rinse the SennosM3 to remove visible debris before soaking.
2. **Submerge the sensor assembly only.** Place the sensor assembly in the prepared cleaning solution. Do not submerge the display or control module housing.
3. **Clean sensor openings and the fluid pass -through port.** Using the provided cleaning brush, gently scrub all sensor frame openings and clean the fluid pass-through port thoroughly.
4. **Rinse thoro ughly.** Rinse the sensor assembly with warm water to remove all cleaning solution residue.
5. **Dry external surfaces.** Use the provided cleaning cloth to dry external components.

Figure 6 -1: Cleaning the M3 - Proper Submerging Depth

SENNOS

6.2.3 Post -Cleaning Handling

After cleaning:

- **If reinstalling the same day:** Sanitize the device using your standard fermentation production sanitization procedure, then proceed to installation.
- **If storing:** Apply the storage reservoir to protect the pH and DO sensors, then follow the storage procedures in Section 6.4.

6.3 Sensor Care & Storage Reservoir Usage

Proper sensor care is critical to ensuring accurate measurements, maintaining sensor longevity, and preventing damage to the SennosM3 device. Special attention must be given to the pH and dissolved oxygen (DO) sensors, both of which require hydration when the device is not installed on a fermentation vessel.

6.3.1 pH & DO Sensor Hydration Requirements

The pH & DO sensor must remain hydrated whenever the SennosM3 is removed from a fermenter and will not be installed on another fermenter the same day. Failure to keep the pH sensor hydrated may result in degraded sensor performance or permanent damage.

Hydration is maintained using the **Sennos storage reservoir** , which contains a hydration pad designed specifically for the pH sensor.

6.3.2 Applying the Storage Reservoir

Follow the steps below to apply the storage reservoir:

1. Ensure the pH sensor is clean and free of debris.
2. Remove any protective covers from the storage reservoir.
3. Insert the storage reservoir into the sensor opening and press the lever down to secure it in place.
4. Verify the reservoir is fully seated and the sensors are covered.

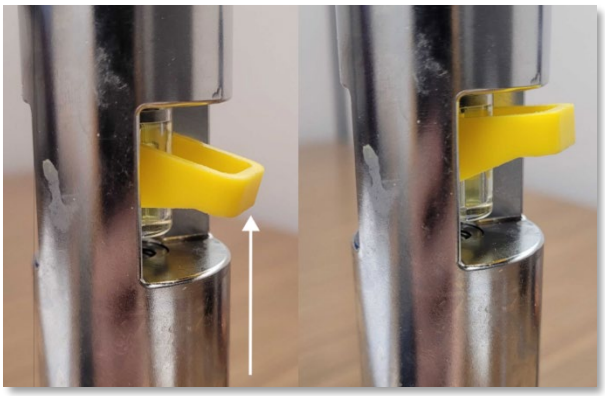

Figure 6 -2: Securing Storage Reservoir

The pH sensor is located in the sensor frame opening closest to the display screen.

6.3.3 Storage Considerations

The SennosM3 may be stored using one of the following methods:

Storage Method 1: Storage Reservoir (Dry Storage)

SENNOS

Once the storage reservoir is applied:

- The SennosM3 may be optionally charged using the provided power cable.
- Store the device safely on a shelf or in its storage case until the next use.
- Ensure the storage reservoir remains in place for the duration of storage.

Storage Method 2: Sanitizer Storage (Wet Storage)

- Place the SennosM3 in a bucket of sanitizer.
- Ensure the pH and DO sensors are fully submerged and covered by sanitizer at all times.
- Do not submerge the Tank Mount or display screen. These components must remain clear of fluid.

6.3.4 Sensor Handling Best Practices

- Always clean the sensor assembly according to the documented cleaning procedures before applying the storage reservoir.
- Avoid allowing the pH and DO sensors to dry out between fermentations.
- Replace storage reservoirs as needed to ensure proper hydration.

6.4 Storage Between Fermentations

When the SennosM3 is removed from a fermenter and will not be installed on another fermentation the same day, proper storage procedures must be followed to protect the sensors, particularly the pH sensor, and maintain device readiness for future use.

The pH and dissolved oxygen (DO) sensors must remain hydrated whenever the device is not actively installed on a fermenter. This is accomplished using the Sennos storage reservoir provided with the system. Failure to keep the sensors hydrated may negatively impact sensor performance and longevity.

Before storage, ensure the SennosM3 has been cleaned in accordance with the cleaning procedures outlined in Section 6.2. Once cleaning is complete and the device is no longer in use, apply the storage reservoir as described in Section 6.3.

6.4.1 Applying the Storage Reservoir for Storage

To prepare the device for storage:

- Ensure the pH sensor is clean and free of debris.
- Remove any protective covers from the storage reservoir.
- Insert the storage reservoir into the sensor opening and press the lever down to secure it in place. Verify the reservoir is fully seated and the pH and DO sensors are covered.
- Do not apply adhesive directly to the sensor surface.

Note: The pH sensor is located in the sensor frame opening closest to the display screen.

Once the storage reservoir is applied, the device may be optionally connected to power using the provided power cable. Store the device on a shelf or in an appropriate storage case until next use.

These storage steps help ensure the SennosM3 remains in proper working condition and ready for accurate monitoring during subsequent fermentations.

6.5 Cleaning & Maintenance Warnings

Failure to follow approved cleaning and maintenance procedures may result in inaccurate readings, equipment damage, or reduced sensor lifespan.

Topic	Warning
Temperature	Do not exceed 55°C (131°F) device operating temperature during cleaning. Maximum cleaning solution temperature is 60°C (140°F).
Cleaning agents	Use only approved non-caustic cleaners. Contact Sennos Support or your Customer Engagement Manager before using any alternative cleaning chemical.
Submersion	The display screen and control module must never be submerged. Only the sensor assembly may be submerged during cleaning.
Sensor protection	Use only the provided cleaning brush on sensor frame openings and the fluid pass-through port. Avoid mechanical stress or impact to sensor openings.
pH and DO sensor hydration	The pH and DO sensors must remain hydrated whenever the device is removed from a fermenter and not immediately reinstalled. Always use the storage reservoir during storage between fermentations.
Module integrity	Ensure all modules are fully tightened before installation. A **Sensor Error** screen indicates a module is not properly seated — resolve this before installing the device on a tank.
General use	The SennosM3 is intended for indoor use only. Use the device only as described in this guide. Use outside of specified procedures may impair the protection provided by the equipment.

7 Troubleshooting & Support

This chapter provides guidance for resolving common hardware and software issues encountered with the SennosM3 system. Work through the relevant section below before contacting Sennos Support — most issues can be resolved without escalation.

If an issue cannot be resolved using the steps below, escalation paths and contact information are provided in Sections 7.5 and 7.6.

Issue Quick Reference

Use the table below to jump directly to the relevant troubleshooting section.

Symptom	Go to

SENNOS

Device Will Not Power On	Section 7.2.1
Device Enters Sleep Mode or Battery is Low	Section 7.2.2
Sensor Error / Check Modules Displayed	Section 7.2.3
ISM Replacement Issues	Section 7.2.4
Inaccurate or Missing Sensor Readings	Section 7.2.5
pH or DO Sensor Issues	Section 7.2.6
Cleaning-Related Issues	Section 7.2.7
No Networks Appearing in Wi-Fi Manager (Bluetooth Check)	Section 7.3.1
Network Appears but Device Cannot Connect	Section 7.3.2
Network Is Saved but Device Won't Reconnect	Section 7.3.3
Connected to Wi-Fi but not to Sennos Cloud	Section 7.3.4
Firewall Configuration Issues	Section 7.3.5
Sending Logs to Support	Section 7.3.6
Device Not Appearing in Sennoslink	Section 7.4.1
User Access or Permission Issues	Section 7.4.2
Need to Contact Support or Escalate	Section 7.5 / 7.6

7.1 Troubleshooting Tools

The Sennoslink mobile application includes a set of built-in diagnostic tools available on the Device Details page. These tools are designed to help identify and resolve connectivity and device issues. Under normal operation, these tools are not needed, they are intended for use when something is not working as expected.

To access the troubleshooting tools, open the Sennoslink mobile app, navigate to the **Devices** section, and tap the device card for your SennosM3 to open the **Device Details** page.

Note:	All tools in this section are available in the Sennoslink mobile app only and are not accessible from the web application.

7.1.1 Bluetooth Check

The Bluetooth Check tool verifies that your phone and the SennosM3 are correctly configured for Bluetooth communication. Because Sennoslink communicates with the SennosM3 over Bluetooth to perform several key functions, including Wi-Fi setup and log retrieval, Bluetooth must be enabled and

permitted on your phone for these features to work.

Running a Bluetooth Check will confirm:

- Whether your phone's Bluetooth is turned on
- Whether the Sennoslink app has been granted Bluetooth permissions on your phone
- Whether the SennosM3 is detectable and advertising a Bluetooth signal

If any of these checks fail, the tool will identify the specific point of failure and provide on-screen instructions for resolving it, including OS-specific steps for enabling Bluetooth or granting app permissions on iOS and Android.

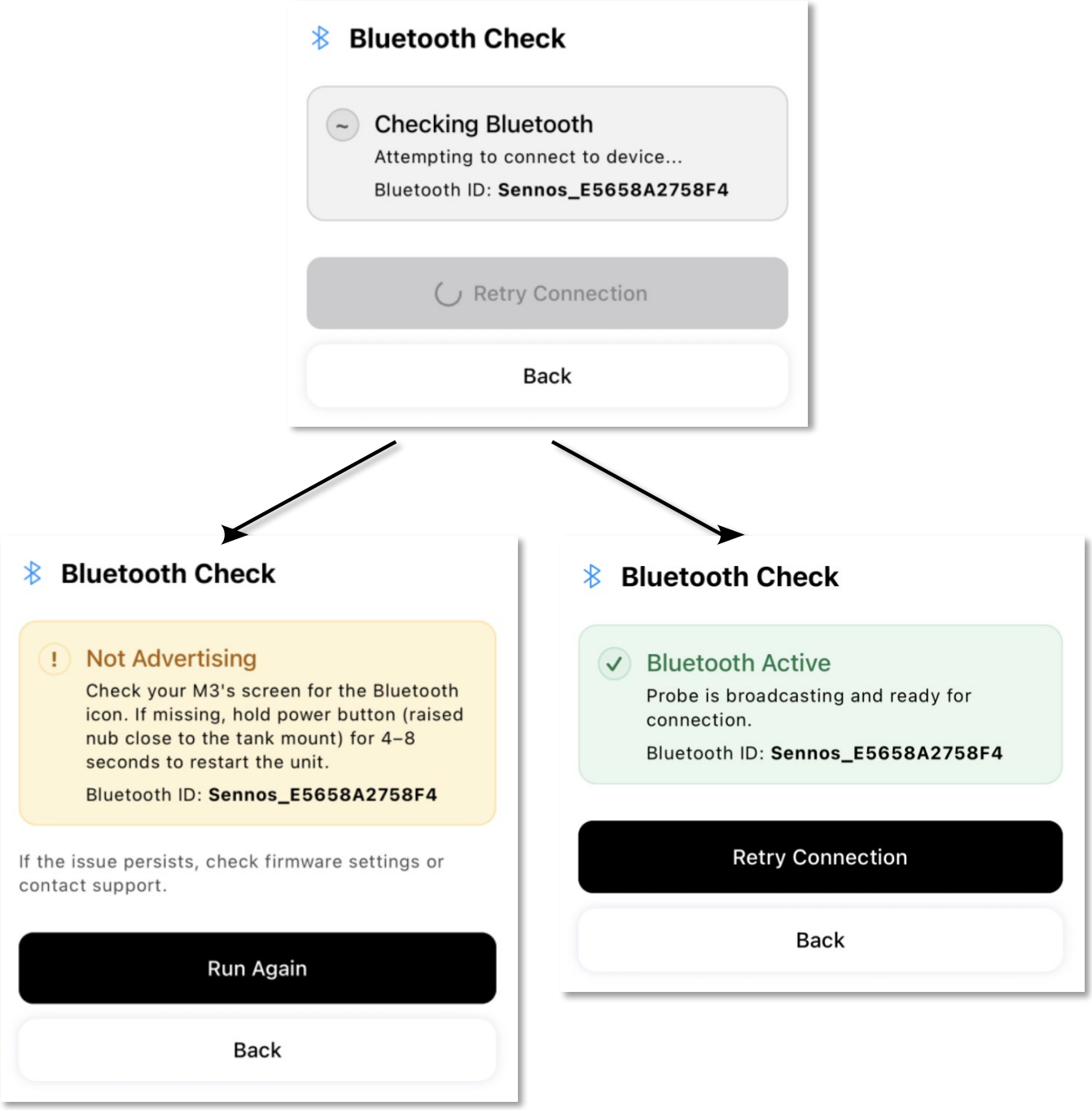

Figure 7 -1: Bluetooth Check

Note:	You must be within Bluetooth range of the SennosM3 for the tool to complete the full check. If the device cannot be detected, the tool will indicate that the device may be out of range or that Bluetooth has not been enabled on the device.

When to use this tool:

Use the Bluetooth Check as your first diagnostic step when no Wi-Fi networks appear in Wi-Fi

Manager, or any time you suspect a Bluetooth connectivity issue between your phone and the SennosM3.

7.1.2 Bluetooth Bridge

Bluetooth Bridge allows the Sennoslink mobile app to communicate directly with the SennosM3 using your phone as a bridge, even when the device is not connected to Wi-Fi. This enables remote commands and configuration to be sent to the device through your phone's connection.

This tool is useful when:

- The SennosM3 has lost its Wi-Fi connection and cannot be reached through the cloud
- You need to send commands or configuration updates to the device without an active Wi-Fi connection

Note:	You must be within Bluetooth range of the SennosM3 to use Bluetooth Bridge.

7.1.3 Send Logs to Support

The Send Logs to Support tool transmits diagnostic log data from the SennosM3 directly to the Sennos support team. Logs provide Sennos Support with a record of device activity and error states that may not be visible from the app or device display alone.

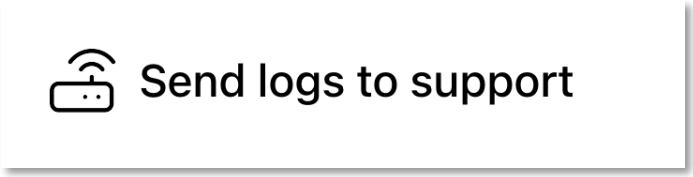

Figure 7 -2: Send Logs to Support

Before or after sending logs, contact Sennos Support directly to describe what you are experiencing and what troubleshooting steps you have already taken. Logs provide the device-side picture, your description provides the context needed to resolve the issue efficiently. See Section 7.5 for support contact information.

Note:	You must be within Bluetooth range of the SennosM3 to send logs. This tool is only available in the Sennoslink mobile app.

When to use this tool:

Send logs when directed to by Sennos Support, or when you have worked through the relevant troubleshooting steps in this section and the issue remains unresolved.

7.2 Hardware Issues

The following issues relate to the physical SennosM3 device, sensor modules, power, and installation.

7.2.1 Device Does Not Power On

- Confirm the device is fully charged or connected to external power using the provided power cable and adapter.
- Verify the power cable is securely attached to the magnetic charging port on the control module.
- Use only the provided 5 V, 2 A power adapter. Using an incompatible adapter may prevent charging or power-on.
- Press and hold the **power button** (the button with the raised tactile indicator, closest to the tank when installed) for 4–5 seconds. The Sennos logo will appear first, followed by the device serial number once fully booted.

Note:	Battery level is shown as a percentage in the Sennoslink mobile app (device detail page). Charge the device to 100% before beginning a fermentation — there is a meaningful runtime difference between 99% and 100%.

7.2.2 Device Enters Sleep Mode or Battery Is Low

The SennosM3 enters power-saving mode between sampling cycles when running on battery. This is normal behavior — the device continues monitoring in this state.

- To wake the display, press the **Select button** (the button without the raised tactile indicator) once. Do not press and hold the power button — this will power the device off completely.
- Connecting the power cable keeps the device from returning to sleep once awake, but does not automatically wake it.
- For long or critical fermentations, connect the device to continuous external power. A Sennos battery pack is also available, contact your Customer Engagement Manager or Sennos Support for details.
- Battery alerts can be configured in Sennoslink to notify you when the battery reaches a low (~70%) or critical (~5–10%) threshold.

7.2.3 Sensor Error — Check Modules

If the display shows a **Sensor Error** screen with a **Check Modules** message and a diagram highlighting the affected module, one or more sensor modules are not fully tightened.

1. Power off the SennosM3.
2. Inspect all module connections and hand-tighten any that are loose.
3. Power the device back on. A power cycle is required to clear the error — tightening alone will not update the display.
4. Confirm the **Sensor Error** screen no longer appears before proceeding with installation.

WARNING:	Do not install the device on a fermentation vessel while a Sensor Error is displayed. Loose modules will produce inaccurate readings or device errors.

7.2.4 ISM Replacement Issues

Sensor Error Displayed After Replacement

- Ensure all modules are fully tightened
- Verify gaskets are correctly installed and not pinched or misaligned
- Power off, re-tighten all connections, and power on again — a power cycle is required to clear the error

Note:	If a Sensor Error persists after re-tightening and power cycling, refer to Section 7 – Troubleshooting & Support before proceeding. If the issue cannot be resolved through troubleshooting, contact Sennos Support for assistance.

Device Not Appearing Correctly in Sennoslink After Replacement

- Confirm module replacement was verified on the device display (no Sensor Error shown)
- Verify the device has reconnected to Wi-Fi
- Check the Devices page in Sennoslink for status errors

7.2.5 Inaccurate or Missing Sensor Readings

- Confirm the device is installed in a compatible 1.5-inch tri-clamp port with the correct orientation: display sideways, control buttons above the display.
- Ensure the fermenter port and sensor openings are free of debris before installation.
- Verify no Sensor Error is displayed — a loose module will produce missing or incorrect readings.
- Confirm the device has not exceeded its environmental operating limits (see Section 8).
- After removal from a tank, clean the sensor assembly according to the procedures in Section 6.2 before storage or reinstallation.

7.2.6 pH and DO Sensor Issues

- **Sensor reads incorrectly or degrades over time:** The pH and dissolved oxygen (DO) sensors must remain hydrated whenever the device is not installed on an active fermenter. Allowing either sensor to dry out causes degraded performance or permanent damage.
- **Sensor dried out during storage:** Apply the storage reservoir immediately. Allow the sensor to rehydrate before the next fermentation. If accuracy remains poor after rehydration, contact Sennos Support — sensor replacement may be required.
- **Storage reservoir not seated correctly:** Refer to Section 6.3.2 for the correct reservoir installation procedure. The lever must be fully pressed to seat the reservoir against the sensor.
- **Unsure which sensor is pH vs. DO:** Refer to the sensor identification diagram in Section 6.3.1. *Note: color/shape coding for sensor identification is planned for a future hardware revision.*

7.2.7 Cleaning-Related Issues

- **Sensor damage after cleaning:** Verify the cleaning solution temperature did not exceed 60°C (140°F), and that no caustic cleaners were used. See Section 6.2 for approved procedures.
- **Display or control module exposed to liquid:** The display and control module must not be submerged at any point during cleaning. Only the sensor assembly may be submerged. If the display was submerged, contact Sennos Support before reusing the device.
- **Residue remaining after cleaning:** Rinse the sensor assembly thoroughly with warm water after soaking. Use the provided cleaning brush on all sensor frame openings and the fluid pass-through port.
- **Using an alternative cleaning agent:** Contact Sennos Support or your Customer Engagement Manager before using any cleaner not listed in Section 6.1. Include the product's Safety Data Sheet (SDS) when submitting a request for approval.

7.3 Wi-Fi Connectivity Issues

Wi-Fi connection problems are among the most common issues encountered during SennosM3 setup. Work through the steps below in order; each section builds on the previous one.

Note:	Wi-Fi configuration is performed through the Sennoslink mobile app. Before troubleshooting, ensure the Sennoslink app is up to date, the app notifies you when an update is available. Keeping the app current resolves many connection problems before they start.

7.3.1 No Networks Appearing in Wi-Fi Manager (Bluetooth Check)

When you tap **Wi-Fi Manager** in the Sennoslink mobile app, the app communicates with the SennosM3 over Bluetooth to retrieve a list of available Wi-Fi networks. If any networks appear in the list, even networks you do not intend to use, Bluetooth is working correctly between your phone and the device.

If no networks appear, the issue is most likely Bluetooth connectivity, not Wi-Fi. Before working through the steps below, confirm that you are within Bluetooth range of the SennosM3. If the app cannot detect the device, it will display a message indicating the SennosM3 was not found, move closer to the device and try again before proceeding.

Step 1 — Run the Bluetooth Check

Open the **Device Details** page for your SennosM3 in the Sennoslink mobile app and run the **Bluetooth Check** tool. This will confirm whether your phone's Bluetooth is enabled, whether the Sennoslink app has the required Bluetooth permissions, and whether the SennosM3 is detectable. The tool will identify any specific failure point and provide on-screen instructions for resolving it.

For full instructions on using the Bluetooth Check tool, see Section 7.1.1.

If the Bluetooth Check passes and networks still do not appear in Wi-Fi Manager, continue to Step 2.

Step 2 — Restart the Device and App

1. Power off the SennosM3.
2. Close and fully exit the Sennoslink app.
3. Power on the SennosM3.
4. Open the Sennoslink app and log in.
5. Navigate back to Wi-Fi Manager and try again.

Step 3 — Contact Sennos Support

If no networks appear after completing the steps above, contact Sennos Support. Request that support verify the unit's QC logs in the issue tracker to confirm the device was shipped with Bluetooth enabled.

7.3.2 Network Appears but Device Cannot Connect

If the target network appears in Wi-Fi Manager but the SennosM3 cannot successfully connect, work through the following checks in order.

Step 1 — Run the Connect Test

Use the **Connect Test** in the Sennoslink mobile app. The purpose of this test is to verify that the SennosM3 can reach the Sennos cloud from the selected Wi-Fi network.

Before running the test, put your phone into airplane mode and then re-enable Wi-Fi only. This ensures the test runs over the Wi-Fi network rather than your cellular connection, giving you an accurate result for that specific network.

The Connect Test can fail for a number of reasons, including:

- The network requires a captive portal, a browser-based login page that the SennosM3 cannot complete, common on hotel, guest, or open public networks
- The network's firewall is blocking outbound connections to the Sennos cloud
- The Wi-Fi network itself does not have active internet access
- The signal at your current location is too weak to maintain a reliable connection

Connect Test Result	What It Means
Fail	The SennosM3 cannot reach the Sennos cloud from this network. See the possible causes above. A different network or mobile hotspot may be required.
Pass	The network can reach the Sennos cloud. However, a Pass does not guarantee the SennosM3 will connect, phones have stronger Wi-Fi hardware than the SennosM3 and can maintain connections on weaker signals. A Pass means the network is capable; it does not confirm the device will reach it from its installed location.

Step 2 — If the Connect Test Passes, Verify Signal and Password

- **Move closer to the router.** While proximity during setup won't guarantee the connection holds once the device is installed at the tank, being close to the router helps establish the initial connection.
- **Verify the Wi-Fi password.** Passwords are case-sensitive — a single incorrectly capitalized character will prevent connection. The most reliable way to confirm the password is correct: on your phone, forget the network and reconnect from scratch. If your phone reconnects successfully using the password you are entering in the app, the password is correct.

Step 3 — If the Connect Test Fails, Confirm the Network Has Working Internet Access

- Connect your phone or laptop to the same Wi-Fi network and browse to a few websites. If internet access is not working on the network itself, no device on it will be able to reach the Sennos cloud, and a different network will need to be used.
- If the network has internet access but the Connect Test still fails, review the possible causes listed in Step 1 — firewall configuration or a captive portal requirement are the most likely explanations. Contact your network administrator or switch to a supported network or mobile hotspot.

7.3.3 Network Is Saved but Device Won't Reconnect

If a network appears as a saved network in Wi-Fi Manager but the device fails to reconnect to it, the stored credentials may be incorrect or corrupted. Clearing the saved entry and reconnecting from scratch resolves this in most cases.

Before proceeding, you will need to be within Bluetooth range of the SennosM3. All communication between the Sennoslink mobile app and the SennosM3, including Wi-Fi Manager access, takes place over Bluetooth.

To access Wi-Fi Manager:

1. Open the Sennoslink mobile app.
2. Navigate to the **Devices** section and tap the device card for your SennosM3.
3. On the **Device Details** page, tap **Wi-Fi Manager**.

To clear the saved network and reconnect:

1. In Wi-Fi Manager, select the saved network from the list.
2. Tap **Forget** to remove the network from the device.
3. Re-enter the network credentials and connect again from the beginning.

Note:	Saved network credentials can become corrupted if a connection attempt was interrupted. Forgetting and re-adding the network clears any stored entry that may be preventing connection.

7.3.4 Connected to Wi-Fi but Not to the Sennos Cloud

If the device's Wi-Fi indicator shows active bars but the cloud icon is not visible on the display, the device has joined the network but cannot reach the Sennos cloud.

1. **Confirm the Wi-Fi signal bars are active and an IP address is shown on the display.** An IP address confirms the device has successfully joined the network.
2. **Check that the network has active internet access.** Connect your phone or laptop to the same Wi-Fi network and browse to a few websites. If the network itself does not have internet access, the SennosM3 will not be able to reach the Sennos cloud regardless of signal strength.
3. **Power-cycle the SennosM3** and allow 1–2 minutes for the cloud connection to establish after reconnecting.
4. **Check the SennosM3 display for the cloud connection icon.** The device display is the most direct indicator of cloud connectivity. If the SennosM3 is not showing a cloud connection, Sennoslink will reflect the same. Do not rely on Sennoslink to confirm connectivity before confirming it on the device first.
5. **If the cloud icon appears on the display,** navigate to the **Devices** page in Sennoslink to confirm the device status has updated. The device will always be visible in Sennoslink, but will show a disconnected status until the cloud connection is established.
6. **If the cloud icon does not appear on the display** after power-cycling and allowing sufficient time, contact Sennos Support. See Section 7.5 for support contact information and guidance on sending logs.

Note:	When the device reconnects to Wi-Fi after a period offline, it uploads stored readings before fully syncing. This process is not instantaneous, connect the device to external power to keep it awake and allow the upload to complete as quickly as possible.

7.3.5 Firewall Configuration

If your facility network uses a firewall, it must be configured to allow outbound communication from the SennosM3 to the Sennos cloud. Without this configuration, the device will connect to Wi-Fi successfully but will be unable to reach the Sennos cloud, this will appear as a persistent **Stack: No Cloud** status on the device display even after a successful Wi-Fi connection.

The following outbound rule must be permitted on the network firewall:

Parameter	Value

Destination Host	relay-v1.sennos.ai
Destination IP	44.218.183.187
Protocol	UDP
Port	17467

Note:	Firewall configuration requires IT or network administrator access. If your facility uses a managed firewall, share the above requirement with your IT team before beginning device setup. The SennosM3 does not require any inbound firewall rules, only the outbound rule listed above.

7.3.6 Sending Logs to Support

If none of the steps above resolve the connection issue, send device logs to Sennos Support directly from the app before contacting support.

1. In the Sennoslink app, tap **Send Logs to Support** .
2. Notify Sennos Support that a logs email is incoming.
3. Provide support with a summary of every step you tried and the result of each. The logs give insight into device-side behavior, but they do not paint the full picture, your notes on what happened during each troubleshooting step are equally important.

Note:	If support and the development team cannot identify a fix from the logs, alternative solutions will need to be identified. Typical options include installing a Wi-Fi extender, using a mobile hotspot, or deploying a Peplink device at the install location. Your Customer Engagement Manager can assist with these options.

7.4 Software Issues

This section addresses issues encountered when using the SennosM3 with the Sennoslink platform, including device visibility and user access.

7.4.1 Device Not Appearing in Sennoslink

The SennosM3 is added to your Sennoslink account by Sennos prior to shipping, the device should appear in your inventory the first time you log in. If the device does not appear in the Sennoslink mobile or web application at all, this indicates a factory or shipping configuration issue. Contact Sennos Support immediately with your device serial number. Do not proceed through the steps below, as they will not resolve a device that was never added to your account.

If the device appears in your Sennoslink inventory but shows a disconnected status, work through the following steps:

1. **Confirm the device is powered on and not in sleep mode.** Press the Select button once to wake it if needed.

2. **Verify the device has connected to a supported 2.4 GHz Wi -Fi network.** Both the IP address and the cloud connection icon should be visible on the SennosM3 display. If the cloud icon is not showing, see Section 7.3.4 — Connected to Wi-Fi but Not to the Sennos Cloud before continuing.
3. **Confirm you are logged in to the correct Sennoslink account.** The device will only appear in the account it was assigned to at the time of shipping.
4. **Match the serial number on the device display to the listing in the app** to confirm you are looking at the correct device entry.

If the device was recently powered on or reconnected to Wi-Fi, allow 1–2 minutes for it to synchronize with the Sennos cloud before troubleshooting further. If the device remains disconnected in Sennoslink after completing these steps, contact Sennos Support.

7.4.2 User Access or Permission Issues

If a user cannot access expected features in Sennoslink:

- Verify the user's assigned role on the **Manage Users** page. Role determines which pages and features are accessible. See Section 4.3 for a full description of available roles.
- Confirm the user accepted the invitation email within the 24-hour activation window. Expired invitations must be resent — contact Sennos Support or, if you have Admin access, resend the invitation from Manage Users.
- If a user needs API or data access permissions, note that these roles cannot be assigned by an account administrator. Contact Sennos Support to enable them.

Note:	Only Admin users can manage users, contacts, compensation settings, and account configuration. If you need to invite a new user and do not have Admin access, contact your account administrator.

7.5 Support Channels

If issues persist after troubleshooting, Sennos provides the following support resources. Reach out through whichever channel is most convenient — all channels connect you to the same team.

Channel	Details
Customer Help Center	**www.sennos.com/support** Online documentation, how-to guides, and FAQs Available 24/7
Email Support	**support@sennos.com** Available 24/7 Typical response time during business hours: ~30 minutes
Phone Support	**+1 (910) 356-6001** Available Monday–Friday, 9:00 AM – 6:00 PM ET Average wait time: ~2 minutes

Customer Engagement Managers	For onboarding, configuration guidance, or account-level support, contact your Customer Engagement Manager.

SENNOS

7.6 Escalation & Service Guidance

If an issue cannot be resolved through standard troubleshooting or first-line support, follow the escalation guidance below.

7.6.1 When to Escalate

Contact Sennos Support and indicate you need to escalate in the following situations:

- Persistent device connectivity failures after completing all troubleshooting steps
- Repeated Sensor Errors after tightening all modules and power-cycling
- Hardware damage or suspected component failure
- Inability to complete fermentation monitoring due to system errors
- Issues requiring feature enablement (such as data access or API permissions)

7.6.2 Escalation Process

1. **Gather information before contacting support.** Collect the following when available:
   - Device serial number (shown on the device display and in Sennoslink)
   - Description of the issue and what you observed
   - Screenshots or photos of any error messages
   - A summary of the troubleshooting steps already taken and their results
2. **Contact Sennos Support** by phone or email. Clearly indicate if the issue is blocking active fermentation monitoring — this helps the team prioritize your case.
3. **Follow guidance from support.** The support team may request additional diagnostic steps, log retrieval from the app, or hardware verification. Follow all instructions to avoid delays in resolution.
4. **Service or replacement coordination**. If hardware service or replacement is required, Sennos Support or your Customer Engagement Manager will coordinate next steps and provide return or shipping instructions.

Contact Support
Phone: +1 (910) 356-6001 | Email: support@sennos.com
Business hours: Monday–Friday, 9:00 AM – 6:00 PM ET | Website: www.sennos.com/support

8 Safety, Compliance & Specifications

This section consolidates all required safety warnings, operating limits, and manufacturer information applicable to the **SennosM 3**. These requirements apply to the device hardware, sensor modules, and associated cleaning, installation, and operational activities.

Failure to follow the guidance in this section may result in inaccurate measurements, equipment damage, or impaired device protection.

8.1 Safety Warnings

The following safety warnings apply to the SennosM3 when used in fermentation environments. The device must be operated within the limits defined in this guide. If the equipment is used in a manner not specified by the manufacturer, device integrity, measurement accuracy, and protective safeguards may be impaired.

Warning:	Changes or modifications not expressly approved by Sennos could void the user's authority to operate the equipment.

8.1.1 General Use Warnings

- **Indoor use only.** The SennosM3 is intended for indoor use only.
- **Use as specified.** The device must be used only as described in this guide to ensure accuracy, longevity, and safety.
- **Manufacturer specification.** If the equipment is used in a manner not specified by the manufacturer, the protection provided by the equipment may be impaired.

8.1.2 Installation & Handling Warnings

- **Module tightening.** All sensor modules must be fully tightened before installation on a tank.
- **Loose modules.** Loose or improperly seated modules may cause inaccurate readings or device errors.
- **Sensor Error.** Any Sensor Error displayed on the device screen must be resolved before installation.

8.1.3 Cleaning & Maintenance Warnings

- **Cleaning temperature.** Do not exceed 60°C (140°F) for cleaning solution temperature. Do not expose the device itself to temperatures above 55°C (131°F) during cleaning.
- **Approved cleaning agents.** Use non-caustic cleaners only. Recommended cleaners: Cell-R-Mastr or PBW. Contact Sennos Support before using any alternative cleaning solution, and include the product's Safety Data Sheet (SDS) with your request.
- **Submersion.** Do not submerge the display screen or control module at any point during cleaning. Submerge sensor assemblies only, as specified in the cleaning procedures in Section 6.

8.1.4 Sensor Protection Warnings

- **Hydration.** The pH and DO sensors must remain hydrated whenever the device is removed from a fermenter and not immediately reinstalled.
- **Storage reservoir.** Use a Sennos storage reservoir to prevent pH sensor drying.
- **Sensor surface.** Do not apply adhesive directly to the sensor surface.

8.2 Environmental & Operating Limits

The SennosM3 is designed for use in controlled production fermentation environments. To ensure safe operation, measurement accuracy, and long-term device reliability, the following environmental and operating limits must be observed.

8.2.1 Temperature Limits

Parameter	Limit / Range
Operating Temperature	-20°C to 55°C (-4°F to 131°F)
Maximum Device Temperature During Cleaning	55°C (131°F). Do not expose the device to prolonged heat above this limit.
Maximum Cleaning Solution Temperature	60°C (140°F)
Charging Temperature	0°C to 45°C (32°F to 113°F)

8.2.2 Humidity & Environmental Exposure

Parameter	Limit / Range
Humidity Range	10% to 95% relative humidity, non-condensing
Moisture Exposure	Designed to withstand wet fermentation environments. Display screen must not be submerged.

8.2.3 Additional Operating Limits

The following limits apply to installation, power, altitude, and atmospheric conditions:

Parameter	Limit / Requirement
Tank Connection	Compatible 1.5-inch tri-clamp port required. Proper module tightening required to ensure pressure integrity and accurate readings. Loose modules may result in inaccurate measurements or device warnings.
Operating Altitude	-100 ft to 10,500 ft (-30 m to 3,200.4 m)
Charging Input	5 V, 2 A via magnetic connector (wall adapter end). Use only the supplied power adapter or an equivalent certified power source.
Pollution Degree Rating	PD2 (per IEC definitions)

IMPORTANT:	Operating the SennosM3 outside the specified environmental or operating limits may impair device performance, reduce measurement accuracy, or compromise equipment safety.

8.3 Compliance & Certifications

The SennosM3 is designed and manufactured for use in controlled, indoor fermentation environments and is supported by formal safety and regulatory documentation provided by Sennos.

8.3.1 Regulatory Compliance

The following United States (FCC) and Canada (ISED) regulatory statements apply to the SennosM3.

United States — FCC

FCC Part 15 Compliance

This device complies with Part 15 of the FCC Rules. Operation is subject to the following two conditions: (1) this device may not cause harmful interference, and (2) this device must accept any interference received, including interference that may cause undesired operation.

Changes or Modifications

Changes or modifications not expressly approved by Sennos could void the user's authority to operate the equipment.

Class B Interference Statement

Note: This equipment has been tested and found to comply with the limits for a Class B digital device, pursuant to part 15 of the FCC Rules. These limits are designed to provide reasonable protection against harmful interference in a residential installation. This equipment generates, uses and can radiate radio frequency energy and, if not installed and used in accordance with the instructions, may cause harmful interference to radio communications. However, there is no guarantee that interference will not occur in a particular installation. If this equipment does cause harmful interference to radio or television reception, which can be determined by turning the equipment off and on, the user is encouraged to try to correct the interference by one or more of the following measures:

- Reorient or relocate the receiving antenna.
- Increase the separation between the equipment and receiver.
- Connect the equipment into an outlet on a circuit different from that to which the receiver is connected.
- Consult the dealer or an experienced radio/TV technician for help.

Canada — ISED

English

This device contains licence-exempt transmitter(s)/receiver(s) that comply with Innovation, Science and Economic Development Canada's licence-exempt RSS(s). Operation is subject to the following two conditions:

- This device may not cause interference.

- This device must accept any interference, including interference that may cause undesired operation of the device.

Français

L'émetteur/récepteur exempt de licence contenu dans le présent appareil est conforme aux CNR d'Innovation, Sciences et Développement économique Canada applicables aux appareils radio exempts de licence. L'exploitation est autorisée aux deux conditions suivantes :

- L'appareil ne doit pas produire de brouillage;
- L'appareil doit accepter tout brouillage radioélectrique subi, même si le brouillage est susceptible d'en compromettre le fonctionnement.

8.3.2 Approved Antenna Information

This device has been approved for operation with the antenna listed below. Use of any antenna not included in this list, or having a gain greater than the maximum specified for this antenna type, is strictly prohibited.

Substitution or use of unauthorized antennas may result in non-compliance with FCC regulations.

Approved Antenna

Attribute	Specification
Manufacturer	TE Connectivity
Model	ANT-2.4-FPC-SH100UF
Type	Flexible PCB antenna
Maximum Gain	5.5 dBi
Impedance	50 Ω
Connector	U.FL / MHF

The antenna is installed inside the device enclosure and is **not accessible to the user**. The antenna is **not intended to be replaced by the end user**.

Any modification to the antenna, or use of an antenna not listed above, is strictly prohibited. Doing so may result in non-compliance with FCC Part 15 regulations and may void the user's authority to operate the equipment.

8.3.3 Declared Compliance Characteristics

Based on the Safety Information & Specifications section, the SennosM3 is characterized by the following compliance-relevant attributes:

- Intended for **indoor use only**
- Designed for **wet fermentation environments** when used as specified

- Pollution Degree Rating: **PD2**
- Operates within defined environmental limits for temperature, humidity, and altitude
- Protection and safe operation are dependent on use **only as specified by the manufacturer**

8.3.4 Use Outside Specification

IMPORTANT:	If this equipment is used in a manner not specified by the manufacturer, the protection provided by the equipment may be impaired.

8.3.5 Regional Compliance Guidance

Because regulatory requirements vary by country and installation environment:

- Users are responsible for ensuring compliance with **local electrical, safety, and sanitation regulations**
- Any questions regarding regulatory approvals or certifications should be directed to **Sennos Support or your Customer Engagement Manager**

8.4 Manufacturer Information

The SennosM3 is manufactured and supported by Sennos. For product support, service inquiries, and regulatory information, refer to the manufacturer details below.

Manufacturer
Sennos
302 E Pettigrew St
Dibrill B100
Durham, NC 27701
United States

For technical support, customer service, or questions regarding safe operation, cleaning practices, or approved usage, contact Sennos Support using the channels listed in Section 7 – Troubleshooting & Support.