BARATZA

ENCORE OPERATIONS MANUAL

Encore™



INTRODUCTION

Thank you for choosing the Encore grinder. You're on the road to making great tasting coffee!

The Encore offers an easy and simple coffee-grinding experience, resulting in a delicious coffee-drinking experience for you. Below are detailed descriptions of the features that make the Encore stand out from other grinders in its class.

Precision Conical Burrs

Manufactured in Europe, the Encore's 40 mm conical burrs will grind for many styles of coffee. Its hardened steel burrs produce the quality grind that is going to make a key difference to the taste in your cup. Our conical burrs grinders are exceptional at producing consistent grinds from very fine to very coarse as well as being durable and will remain sharp for many years.

Grind Adjustment

The Encore has 40 distinct settings to enable grinding from espresso to French Press with the simple turn of the hopper. This range of grind settings helps you explore an extensive range of brew methods (AeroPress, Hario V60, Chemex, automatic drip brewers).

Efficient Motor

The Encore houses a powerful DC motor that produces more than four times the output with twice the efficiency of a standard AC motor found in most grinders in this class. The motor spins at less than one-third the speed, making it quieter and lower in pitch. Extremely well-made, the motor is built to handle long-duty cycles. In addition, it possesses a thermal safety device that protects the motor from overheating and automatically resets once the motor cools.

September 2019 (v4)

TABLE OF CONTENTS

INTRODUCTION 1

TABLE OF CONTENTS 2

SAFETY INFORMATION 3

PARTS IDENTIFICATION 4

OPERATION 5

- Setting the Grind Control 6
- Manual Switch Operation 6
- Front Mounted Pulse Button 6

CARE AND CLEANING 7

- Removing the Bean Hopper 7
- Removing the Ring Burr 7
- Cleaning the Grounds Bin, Hopper and Burrs 7
- Replacing the Ring Burr 7
- Replacing the Bean Hopper 8
- Clearing a Clogged Grinder 8
- Automatic Cleaning 8

WARRANTY AND SERVICE 9

SAFETY INFORMATION

Please read the information below very carefully. It contains important safety information for this appliance. Please keep these instructions for future reference.

- Use only with AC current and the correct voltage. See the label on the base of the grinder to determine the correct voltage.
- Only clean the grinder housing with a dry or slightly damp cloth. Do not immerse the grinder, plug or cord in water or any other liquid.
- Baratza will not accept any liability for damage, injury, or warranty if the grinder is used other than for its intended purpose (i.e. grinding roasted whole coffee beans) or is improperly operated or repaired.
- Keep the appliance and its cord out of reach of children aged less than 8 years.
- Do not operate the grinder with a damaged cord or plug. If the supply cord is damaged, it must be replaced by the manufacturer, its service agent or similarly qualified persons in order to avoid a hazard.
- Do not leave your grinder unattended while turned ON.
- This appliance can be used by children aged from 8 years and above and persons with reduced physical, sensory or mental capabilities or lack of experience and knowledge if they have been given supervision or instruction concerning use of the appliance in a safe way and understand the hazards involved.
- Cleaning and user maintenance shall not be made by children without supervision.
- Always unplug the grinder from the electrical supply before assembling, disassembling or cleaning. To unplug, grasp plug and remove from the outlet. Never pull on the cord.

CAUTION: ALWAYS unplug the electrical supply cord prior to cleaning the grinder.

PARTS IDENTIFICATION

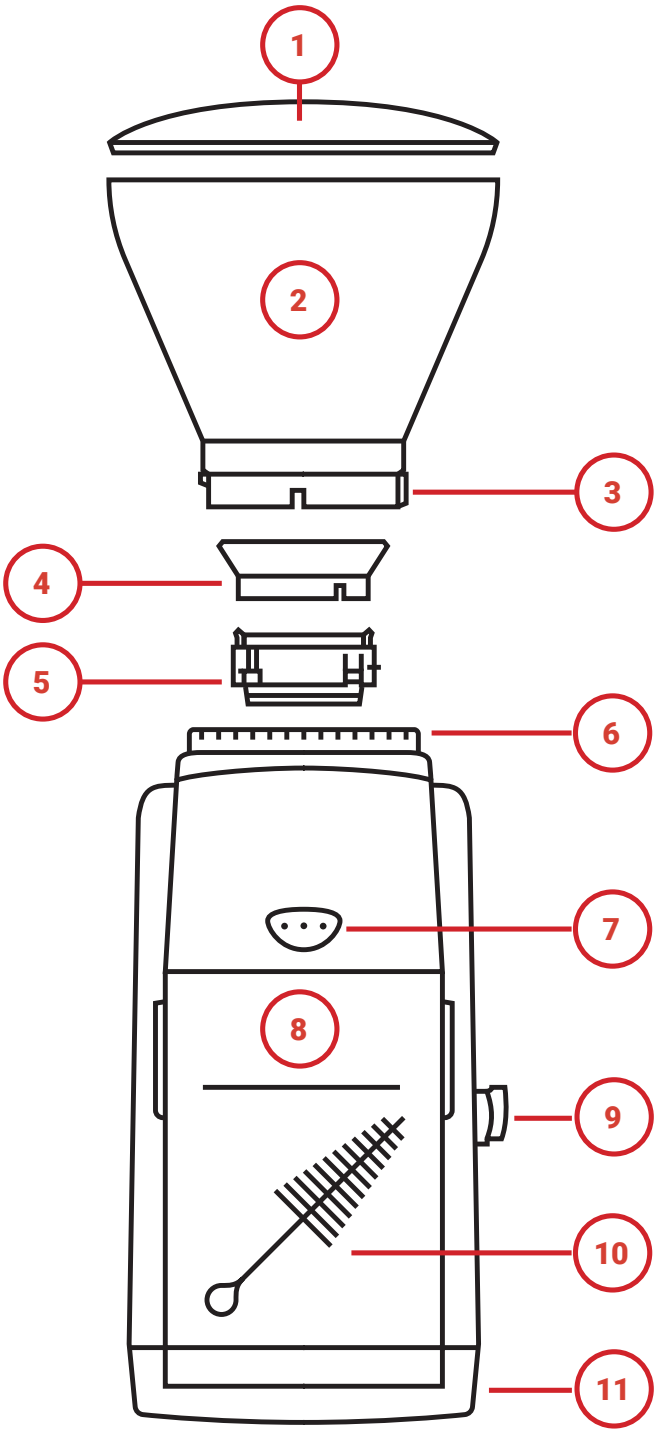

1. Hopper Lid
2. Bean Hopper
3. Grind Setting Indicator
4. Black Silicone Gasket (cut away in 2nd illustration)
5. Removable Ring Burr
6. Grind Adjustment Scale
7. Pulse Button
8. Grounds Bin with Max Fill Line
9. On/Off Knob *
10. Brush *
11. Weighted Base
12. Grind Adjustment Ring
13. Grind Adjustment Tab
14. Burr Alignment & Lifting Tabs
15. Wingnut (do not remove)
16. Center Cone Burr

** included in grounds bin*

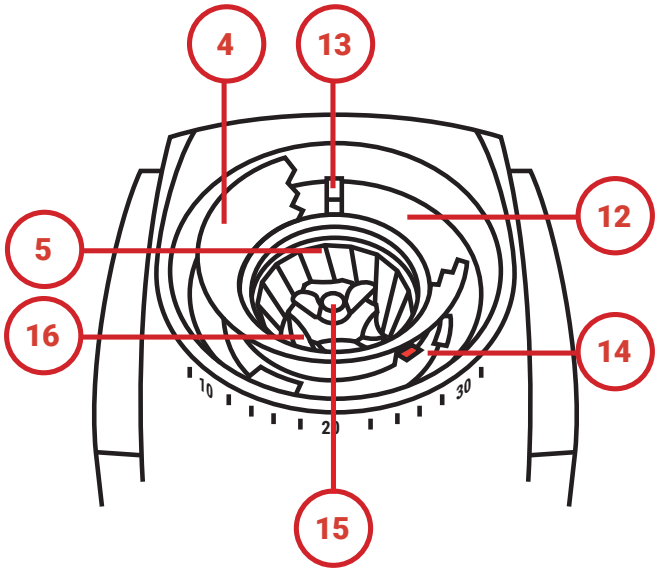

OPERATION

IMPORTANT TO KNOW BEFORE USING YOUR GRINDER

- Follow the steps in the Quick Start Guide (included with your grinder or available online here) to get your grinder ready for use
- Be sure all parts are washed, dried, and clean. If you need further instructions, check out the Care & Cleaning section

Prior to using your Encore grinder for the first time you should wash the bean hopper and grounds bin in warm soapy water. Be sure to fully dry these parts before re-installing. See the section on Care and Cleaning for instructions on how to remove and reinstall these parts. There may be some rust or discoloration on the burrs when you receive your grinder. This is normal and will disappear after a small amount of coffee has been ground. To remove the rust and season the burrs, grind 50 grams of coffee and discard.

INITIAL OPERATION

- Place the Encore on level surface, plug into AC Outlet
- Remove lid from hopper, pour in roasted beans and replace the lid
- Ensure grounds bin is in place
- Set the grind adjustment/control* (see below for details)
- Use On/Off switch, or front mounted pulse button to start the grinder

* Grinder will not activate if above setting 40

Note: Partially ground coffee beans may remain between the burrs after the grinder is turned off. When making ANY grind adjustments, the grinder must be running.

SETTING THE GRIND CONTROL

The grind setting indicator moves from coarse (40) to fine (1). Slowly rotate the bean hopper clockwise or counter clockwise to align the grind setting indicator on the bean hopper with the desired number setting on the grind scale.

Turning the hopper to the right (→) produces a coarser particle size and left (←) produces a finer particle size.

The settings shown in the table below can be used as a general starting point. The actual grind size for a particular setting will vary depending on many factors including: degree of roast (light vs. dark), freshness, humidity, type of bean, oil content, etc. With use, you will determine the setting that is right for your taste, brewing style, and your favorite beans.

	Espresso	AeroPress	Hario V60	Automatic Brewer	Chemex	French Press
Suggested Setting	8	12	15	18	20	28

MANUAL SWITCH OPERATION

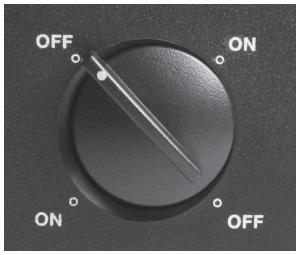

You may rotate the On/Off switch clockwise or counter clockwise from any position without damaging it.

* Leaving the grinder unattended while grinding a large dose may result in a clog

FRONT MOUNTED PULSE BUTTON





For short duration grinding, the Encore is equipped with a front-mounted pulse button.
Push and hold the pulse button to grind; the grinder will grind as long as the button is pressed.
Grinding will stop when the button is released.

Note: It is important that if using an espresso basket, hold it below the discharge chute so that coffee powder can fall freely into the basket. Holding the basket too close to the discharge chute may cause coffee to back up and clog your grinder.

CARE & CLEANING

REMOVING THE BEAN HOPPER

Remove all beans from the hopper then press the front-mounted pulse button to grind any remaining beans through the grinder. Remove the plug from the power outlet. Remove the hopper by rotating it counterclockwise until it stops and then lift the bean hopper off of the grinder.

REMOVING THE RING BURR

Pull the black silicone gasket off the top of the ring burr. Remove the ring burr by lifting it straight up out of the grinder by the lifting tabs. If the burr does not lift out, ensure that the grind adjustment ring is turned fully counterclockwise.

CLEANING THE GROUNDS BIN, HOPPER & BURRS

Wash the grounds bin, hopper, and the hopper lid in warm soapy water, then rinse and dry. If the grinder is used daily, the burrs should be cleaned at least every few months using tablets (see below for Automatic Cleaning) or with a stiff brush. Proper cleaning enables the burrs to achieve the most consistent grind possible. Cleaning also removes some coffee oils, which will stale and degrade the flavor of the ground coffee.

REPLACING THE RING BURR

Ensure that the black adjustment ring is rotated counterclockwise as far as it will go. Replace the burr by lining up the red tab on the burr with the rectangular cutout on the black adjustment ring. Both should be lined up with the setting 30. Wiggle and push down firmly on the ring burr to ensure that it seats properly. After replacing the burr, place the silicone gasket on top of the ring burr by aligning the two notches in the silicone gasket with the ring burr tabs (one of which is red) and gently work the gasket down until it is seated on the top 1⁄8” (4mm) of the ring burr.

Caution: Do not put the bean hopper, hopper lid or grounds bin in the dishwasher. Hand wash only. Do not immerse the grinder housing in water. Do NOT wash the burrs with water, or they will rust.

REPLACING THE BEAN HOPPER

To replace the bean hopper, line up the silver grind setting indicator tab with the black triangle on the right side of the grind setting scale, near setting 40. Once the hopper is in place, press down gently, and rotate it clockwise to lock it in.

CLEARING A CLOGGED GRINDER

If your grinder is not dispensing coffee normally, it could be clogged with coffee powder. This can happen if the grounds bin or portafilter are overfilled and ground coffee gets backed up into the grounds chute and grinding chamber. It can also happen with the buildup of coffee powder over time. Clearing a clog requires more effort than and is different from a normal cleaning, as coffee becomes packed in a hard-to-access passageway between the burr and grounds bin. The clog needs to be cleared with the aid of tools.

Go to the Troubleshooting section on baratza.com/troubleshooting for help unclogging your grinder.

AUTOMATIC CLEANING

A thorough, fast, and easy cleaning can be accomplished using biodegradable grinder cleaning tablets. Grinder cleaning tablets are designed to dislodge coffee particles, absorb/remove odors, as well as coffee oil residue. Remove all beans from the hopper and run the grinder to remove any beans inside. Place the recommended amount of tablets into the empty grinder hopper. Adjust the grind setting to 30, insert the grounds bin and use the dial to run the grinder. Grind all of the tablets into the bin. Once complete, we recommend grinding approximately 30g coffee to remove any tablet residue. Discard the ground tablets/coffee.

* Rice is not a substitute for grinder cleaning tablets. It may damage components within the grinder.

WARRANTY & SERVICE

U.S. & CANADIAN WARRANTY INFORMATION

Limited Warranty for Baratza Grinders is 1 year from the original date of purchase or 25 hours of cumulative run time, whichever occurs first. This warranty covers all defects in materials and workmanship (parts and labor) including free ground transportation to and from our repair facility within the US and Canada. This warranty does not apply to: improper use, lack of cleaning, abuse, normal wear and tear, lack of proper adjustment, foreign objects (stones, screws, etc.) in the beans, or uses outside the intended use of grinding whole roasted coffee beans (roasted beyond 1st crack). If your grinder fails within one year, e-mail us support@baratza.com or call 425-641-1245 or toll free 877-701-2021.

For additional warranty, support, or troubleshooting information, go to baratza.com.

INTERNATIONAL WARRANTY INFORMATION

For all countries outside the US and Canada, the warranty, support and service is provided by the International Retailer you purchased from. If you purchased this grinder from a retailer outside of the country you live in, you may be responsible for any shipping costs to service the grinder, and you may need to pay for service.

PROOF OF PURCHASE & PRODUCT REGISTRATION

You can register your grinder at baratza.com/register-your-grinder. Registration will enable us to contact you in the unlikely event of a product safety notification and assist us in complying with the provisions of the Consumer Product Safety Act. The serial number is located on the bottom of the grinder. Please keep your sales receipt that shows the date of purchase.

FOR REPAIRS OR QUESTIONS

Email: support@baratza.com

For Parts and Information go to: baratza.com

For Troubleshooting Help: baratza.com/troubleshooting

©2019 Baratza
124th Avenue NE
Suite A108/109
Bellevue, WA 98005, USA

baratza.com

Manual Revision Date 09/11/2019