Miele

Operating instructions
Heat-pump dryer

To avoid the risk of accidents or damage to the appliance it is **essential** to read these instructions before it is installed and used for the first time.

en-GB

M.-Nr. 13 148 500

Contents

Caring for the environment **5**
Disposal of fluff or accessories 5

Warning and Safety instructions . **6**

Operating the tumble dryer **14**
Control panel..... 14
Touch display and sensors 14
Main menu 15
Examples on how to operate the appliance 16
Moving programmes 17

Before using for the first time..... **19**
Installation..... 19
Downtime after installation..... 19
Miele@home 19
Setting the language 20

Energy saving tips **22**
Energy saving tips..... 22
Feedback 23

1. Notes on correct laundry care... **24**
Points to note regarding washed laundry 24
Preparing the laundry before drying 24
Drying..... 25
Care symbols..... 25
Selecting the correct drying level..... 25

2. Load the tumble dryer **26**
Loading the laundry..... 26
Checking the FragranceDos socket 26

3. Selecting a programme **27**
Switching on the tumble dryer 27
Selecting a programme 27

4. Selecting programme settings . **28**
Selecting the drying level 28
Selecting the running time for time programmes 29
Selecting extras 29

5. Starting a programme **30**
Starting the programme..... 30

6. End of programme - unload the drum **31**
End of programme 31
Unloading the drum 31

Programme chart **32**

Extras..... **38**
DryFresh 38
PowerFresh 38
DryCare 40 39
Gentle tumble..... 39
Freshen up..... 39
Drying programme overview - Extras 40

Wash2Dry **41**
Requirements for use 41
Selecting the Wash2Dry function 41

Favourite programmes..... **42**
To create a Favourite programme 42
Option 1..... 42
Option 2..... 42
To enter a name 42
To change a Favourite programme 42

Drying assistant **43**

Timer..... **44**
Setting the timer 44
Changing the timer 44
Deleting the timer 44
Starting the timer..... 44
SmartStart 45
Setting the time period..... 45

Changing the programme sequence **46**
Adding or removing laundry..... 46

Contents

Condensed water container **47**
Emptying the condensed water container 47
Filling the condensate container 49

Fragrance flacon **50**
FragranceDos 50
Removing the protective seal from the fragrance flacon 50
Inserting the fragrance flacon 51
Opening the fragrance flacon 52
Closing the fragrance flacon 52
Removing/replacing the fragrance flacon 53

Cleaning and care **54**
Fluff filters 54
Removing the fragrance flacon .. 54
Removing visible fluff 54
Cleaning the fluff filters and air flow openings thoroughly 55
Cleaning the fluff filters with water 56
Cleaning the plinth filter 56
Removing the plinth filter 57
Cleaning the plinth filter 57
Cleaning the plinth filter access panel 59
Cleaning the tumble dryer 60

Problem solving guide **61**
Fault messages shown in the display when a programme is cancelled 61
Messages in the display 62
Unsatisfactory drying results 63
The drying cycle duration is very long 65
General problems with the tumble dryer 65
Replacing the plinth filter 68
Reactivating the plinth filter 69
Checking the heat exchanger 69
Cleaning the fluff filter in the condensed water container 69
Replacing the condensed water spray jet 71

Service **72**
Contact in the event of a fault 72
EPREL database 73
Optional accessories 73
Warranty 73

Installation **74**
Front view 74
Rear view 75
Transporting the tumble dryer 75
Transporting the tumble dryer to its installation site 75
Installation 76
Levelling the tumble dryer 76
Downtime after installation 76
Ventilation 76
Before moving the tumble dryer again (e.g. when moving house). 76
Additional installation requirements 77
External condensed water outlet 78
Installation conditions requiring a non-return valve 78
Arranging the drain hose 79
Examples 79
Changing the door hinging 81
Changing the hinging over 81
Refitting 85
Electrical connection 86

Technical data **87**
EU Conformity declaration 87
UK Conformity declaration 88

Consumption data **89**

Settings **90**
Accessing the Settings menu 90

Contents

Operation/display ⚑ 90
Language ⚑ 90
Code 90
Clock display 91
Consumption 91
Memory 91
Volume 91
Behaviour finish tone 91
Display brightness 91
Wash2Dry 91
“Display” off status 92
Networking 92
Miele@home 92
SmartGrid 93
Remote control 93
RemoteUpdate 93
Programme sequence 94
Anti-crease 94
Cooling down temp. 94
Drying levels 94
Machine parameters 94
Airways indicator 94
Conductivity 95
Operating hours 95
Factory default 95
Legal information 95

Disposing of the packaging material

The packaging material is used for handling and protects the appliance from transport damage.

Recycling the packaging material reduces the use of raw materials. Use material-specific collection points for valuable materials and take advantage of return options. Your Miele dealer will take the packaging material away.

Disposing of your old appliance

Electrical and electronic appliances contain many valuable materials. They also contain certain materials, compounds and components which were essential for their correct functioning and safety. These could be hazardous to human health and to the environment if disposed of with household waste or if handled incorrectly. Please do not, therefore, dispose of your old appliance with household waste.

Instead, please make use of officially designated collection and disposal points to dispose of and recycle electrical and electronic appliances in your local community, with your dealer or with Miele, free of charge. By law, you are solely responsible for deleting any personal data from the old appliance prior to disposal. You are legally obliged to remove any old batteries which are not securely enclosed by the appliance and to remove any lamps without destroying them, where this is possible. These must be taken to a suitable collection point where they can be handed in free of charge. Please ensure that your old appliance poses no risk to children while being stored for disposal.

Disposal of fluff or accessories

Abrasion causes environmentally harmful microplastic particles to be released from garments containing synthetic fibres, which remain on the laundry after washing. For this reason, dispose of the fluff collected by the fluff filters with your household waste. To prevent microplastics from spreading into the waste water system, fluff must not be drained away with the water.
Dispose of unusable accessories, e.g. empty fragrance flacons or a defective plinth filter, with your household waste.

Warning and Safety instructions

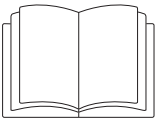

▶ It is essential to read these instructions.

This tumble dryer complies with all current local and national safety requirements. However, inappropriate use can lead to personal injury and damage to property.

Read the operating instructions carefully before using the tumble dryer. They contain important information on safety, installation, use and maintenance. This prevents both personal injury and damage to the tumble dryer.

In accordance with standard IEC 60335-1, Miele expressly and strongly advises that you read and follow the instructions in the chapter on installing the tumble dryer as well as the safety instructions and warnings.

Miele cannot be held liable for damage caused by non-compliance with these instructions.

Keep these operating instructions in a safe place and pass them on to any future owner.

Correct application

▶ This tumble dryer is intended for use in domestic households and similar working and residential environments.

▶ This tumble dryer is not intended for outdoor use.

▶ It must be used only as a domestic appliance to dry items which have been washed in a water solution and which are marked on the manufacturer's care label as being suitable for tumble drying. If using dry cleaning kits, do so at your own risk, and follow the instructions provided on the packaging.
Any other applications may be dangerous. Miele cannot be held liable for damage resulting from incorrect or improper use or operation.

▶ This tumble dryer can only be used by people with reduced physical, sensory or mental capabilities, or lack of experience or knowledge, if they are supervised whilst using it or have been shown how to use it in a safe way and understand and recognise the consequences of incorrect operation.

Safety with children

▶ Children under 8 years of age must be kept away from the tumble dryer unless they are constantly supervised.

▶ Children 8 years and older may only use the tumble dryer unsupervised if they have been shown how to use it safely and recognise and understand the consequences of incorrect operation.

▶ Children must not be allowed to clean or maintain the tumble dryer unsupervised.

▶ Please supervise children in the vicinity of the tumble dryer and do not let them play with it.

Technical safety

▶ Please observe the instructions in “Installation” and the “Technical data”.

▶ Before setting up the tumble dryer, check it for any externally visible damage.
Do not install or use a damaged tumble dryer.

▶ Before connecting the tumble dryer, ensure that the connection data on the data plate (fuse rating, voltage and frequency) match the mains electricity supply. If in any doubt, consult a qualified electrician.

▶ Temporary or permanent operation on an autonomous power supply system or a power supply system that is not synchronised with the mains power supply (e.g. island networks, back-up systems) is possible. A prerequisite for operation is that the power supply system complies with the specifications of EN 50160 or an equivalent standard.
The function and operation of the protective measures provided in the domestic electrical installation and in this Miele product must also be maintained in isolated operation or in operation that is not synchronised with the mains power supply, or these measures must be replaced by equivalent measures in the installation. As described, for example, in the current version of BS OHSAS 18001–2 ISO 45001.

▶ The electrical safety of this tumble dryer can only be guaranteed when correctly earthed. It is essential that this standard safety requirement is met. If in any doubt, please have the household wiring system tested by a qualified electrician. Miele cannot be held liable for the consequences of an inadequate earthing system (e.g. electric shock).

▶ Do not connect the appliance to the mains electricity supply by an extension lead, multi-socket adapter or similar. These can overheat and are a fire hazard.

▶ If defective safety-relevant components are replaced, Miele can only guarantee full compliance with safety requirements if genuine Miele replacement parts are used.

▶ Unauthorised repairs could result in unforeseen dangers for the user, for which the manufacturer cannot accept liability. Maintenance or repairs must only be carried out by a qualified specialist or Miele Customer Service.

▶ The accessibility of the plug must always be ensured, in order to disconnect the tumble dryer from the mains.

▶ If the mains connection cable is damaged it must always be replaced by a qualified specialist to protect the user from danger.

▶ The tumble dryer must be isolated from the electricity supply in the event of a fault and during cleaning and maintenance.

▶ Heat pump technology and refrigerant:
this tumble dryer uses a gaseous refrigerant which is condensed by the compressor. The refrigerant, which is brought to a higher temperature level and liquefied by condensing, is led in a closed circuit through the heat exchanger unit where heat exchange with the circulating drying air takes place.

⚠ Damage to the tumble dryer by switching it on too soon.

This can damage the heat pump.

After setting up the tumble dryer wait for at least one hour before switching it on.

- The humming noises caused by the heat pump during the drying process are normal. They do not impair the efficient functioning of the dryer.
- The refrigerant is not flammable or explosive.

- This tumble dryer contains fluorinated greenhouse gases. Hermetically sealed.

Designation of refrigerant	R134a	R134a	R450A
Refrigerant quantity	0.48 kg	0.30 kg	0.31 kg
Global warming potential of refrigerant	1430 kg CO_2 e	1430 kg CO_2 e	605 kg CO_2 e
Global warming potential of appliance	686 kg CO_2 e	429 kg CO_2 e	188 kg CO_2 e
The designation and quantity of refrigerant that apply to this tumble dryer, and the global warming potential, can be found on the data plate (at the back of the tumble dryer).			

▶ Do not block the gap between the bottom of the tumble dryer and the floor with plinth facings, deep pile carpet etc. This would hinder a sufficient flow of air to the dryer.

▶ Make sure the dryer door can be opened without hindrance after installation.

▶ This tumble dryer must not be used in a non-stationary location (e.g. on a ship).

▶ Do not make any alterations to the tumble dryer, unless authorised to do so by Miele.

▶ This tumble dryer is fitted with a special lamp to cope with particular conditions (e.g. temperature, moisture, chemical resistance, abrasion resistance and vibration). This special lamp must only be used for the purpose for which it is intended. It is not suitable for room lighting. Replacement lamps may only be fitted by a qualified specialist or by Miele Customer Service.

Correct use

▶ Do not install the tumble dryer in a room where there is a risk of frost occurring. At temperatures around freezing point the tumble dryer may not be able to operate properly. There is a risk of damage if the condensed water is allowed to freeze in the pump or hoses.
The ambient room temperature should be between 2°C and 35°C.

▶ The maximum load for this tumble dryer is 9.0 kg (dry weight).
The maximum recommended loads for individual programmes are given in the Programme chart.

▶ To prevent the risk of fire, do not connect the tumble dryer via a controllable socket (e.g. a timer or a peak-load switch-off device).
If the drying programme is interrupted before the end of the cooling down phase, this could cause the laundry to self-ignite.

▶ **Warning:** Do not switch the dryer off before the drying programme has finished. If this is done, the laundry must be hung up or spread out to cool it down.

▶ In many programmes, the heating phase is followed by a cooling down phase to ensure that the items are not too hot to handle when you remove them (this also avoids the danger of the laundry self-igniting). The programme is not finished until the cooling down phase has been completed.
As soon as the programme has finished, remove all laundry from the drum.

▶ To prevent the risk of fire, the following textiles must not be dried in this tumble dryer:

- Items which have not been washed.
- Items, such as workwear, which have not been thoroughly cleaned and which are still soiled with grease, oil or other deposits (such as cosmetics, lotions etc). If items have not been thoroughly cleaned there is a danger that these might ignite when heated, even after they have been removed from the dryer at the end of the programme.
- Items (e.g. mops and floor cloths) which have been treated with inflammable cleaning agents or which contain residues of acetone, alcohol, benzene, petrol, kerosene, stain remover, turpentine, wax and wax remover or other chemicals.
- Items which have been splashed with hair lacquer, hair spray, nail varnish remover or similar substances.

When washing such heavily soiled items ensure that you use sufficient detergent and select a high temperature. If in doubt, wash the items several times.

▶ Remove all items from pockets (e.g. lighters, matches).

▶ To prevent the risk of fire, the following textiles must not be dried in this tumble dryer:

- Items which have been cleaned using chemicals (e.g. professional dry-cleaning agents).
- Items which contain a large proportion of rubber, foam rubber or rubber-like materials. For example, products made from latex foam rubber, shower caps, waterproof textiles, rubberised articles and items of clothing and pillows with foam rubber filling.
- Damaged items which contain padding or fillings (e.g. pillows, jackets). When damaged, the filling can get out with the risk of it igniting in the dryer.

▶ Always close the door after use. This way you will avoid the danger of:

- Children climbing onto or into the dryer or hiding things in it.
- Pets or other small animals climbing into it.

▶ Do not let anyone sit or lean on the door, as this can cause the tumble dryer to tip up.

▶ The fluff filters must be cleaned after every drying cycle.

▶ The fluff filters or the plinth filter must be thoroughly dried after cleaning. Wet fluff/plinth filters could cause operational faults while drying.

▶ The tumble dryer must not be used without fluff filters or

- with damaged fluff filters, or
- with a damaged plinth filter.

This would cause an excessive build-up of fluff which in turn would cause a fault.

▶ If the water is drained externally through the drain hose instead of being collected in the condensed water container, make sure the drain hose is securely attached if you hang it in a sink or basin to avoid the hose slipping and the water causing damage.

▶ Condensed water is not drinking water.
It can cause health problems in both people and animals if consumed.

▶ Always keep the area around the tumble dryer free of dust and fluff.
Dust drawn into the tumble dryer can cause blockages in the heat exchanger over time.

▶ The tumble dryer must not be hosed down.

▶ Fabric conditioner and similar products must be used according to the instructions on the manufacturer's packaging.

Using a fragrance flacon (optional accessory)

▶ Only use genuine Miele original fragrance flacons.

▶ The fragrance flacon must be stored in its packaging so please make sure you retain this.

▶ Caution. The fragrance can leak out of the flacon. Make sure that you always keep the flacon, or the fluff filter with the flacon inserted in it, in a horizontal position when carrying and do not tip or place down on any surface.

▶ Use an absorbent cloth to wipe up any fragrance which has leaked out of the flacon onto the floor, the dryer or any dryer components (e.g. the fluff filter) immediately.

▶ If fragrance which has leaked out of a flacon: comes into contact with the **skin** - wash the skin thoroughly with soap and water; comes in contact with the **eyes** - rinse the eyes with clean water for at least 15 minutes; is swallowed - rinse out the **mouth** thoroughly with clean water. Seek medical advice in the case of contact with the eyes or if fragrance has been swallowed.

▶ If fragrance which has leaked out of a flacon comes in contact with clothing, change the clothing immediately. Wash the clothing or any cloths used for mopping up fragrance thoroughly with plenty of water and detergent.

▶ There is the risk of fire or damage to the tumble dryer if the following instructions are not observed:

- Never refill a flacon with fragrance.
- Never use a faulty fragrance flacon.

▶ Dispose of an empty fragrance flacon with the household waste and never use it for any other purpose.

▶ Please also observe the information supplied with the fragrance flacon.

Accessories

▶ Only use genuine Miele original spare parts and accessories with this appliance. If non-Miele parts are used, warranty, performance and product liability claims will be invalidated.

▶ The tumble dryer can be combined with a Miele washing machine in a washer-dryer stack. The appropriate “WTV” stacking kit (available to order) to match your tumble dryer and washing machine is required.

▶ If you order a plinth for this tumble dryer (available from Miele as an optional accessory - depending on country), make sure it is the correct one.

▶ Miele original spare parts are kept in stock for at least 10 years and up to 15 years after discontinuation of your tumble dryer.

⚠ Miele cannot be held liable for damage caused by non-compliance with these Warning and Safety instructions.

Operating the tumble dryer

Control panel

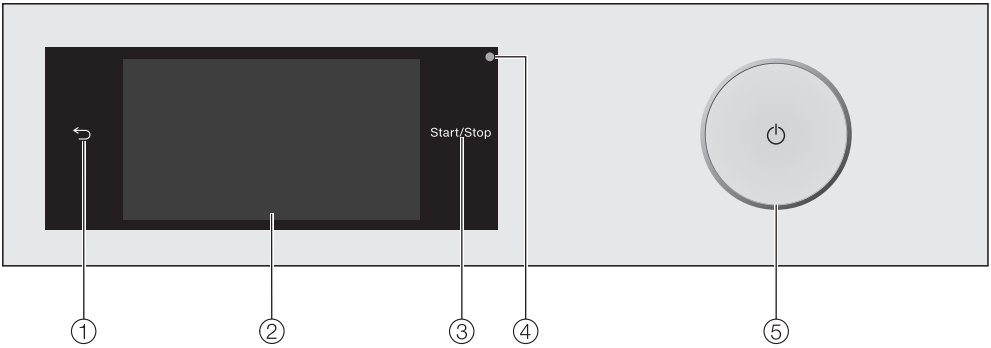

① ⮌ **sensor control**
Takes you back one level in the menu.

② **Touch display**

③ **Start/Stop sensor**
Touching the *Start/Stop* sensor starts the selected programme or cancels a programme that has already been started. The sensor flashes slowly as soon as it is possible for a programme to be started and then lights up constantly after the programme has started.

④ **Optical interface**
This is used by the Service department as a transmission point.

⑤ ⏻ **button**
For switching the tumble dryer on and off. The tumble dryer switches off automatically to save energy. This occurs 15 minutes after the end of the programme/anti-crease phase, or after being switched on if no further selection is made.

Touch display and sensors

The ⮌ and *Start/Stop* sensors and the sensors in the display react to finger tip contact.

The touch display can be scratched by pointed or sharp objects, e.g. pens.
Only touch the display with your fingers.

Main menu

After switching on the tumble dryer, the main menu will appear in the display.

You can access all the important sub-menus from the main menu.

Touch the ⌂ sensor control at any time to return to the main menu. Values set previously are not saved.

Main menu page 1

You can scroll to the second page of the main menu by swiping your finger across the display.

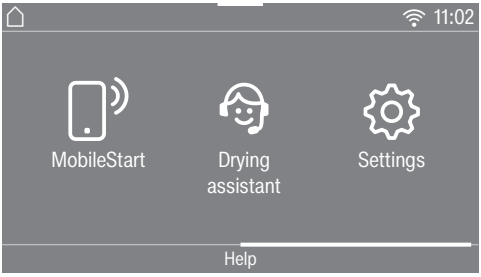

Main menu page 2

The ᯤ symbol next to the time of day is displayed when the tumble dryer is connected to a network.

Programmes

For selecting drying programmes.

☆ Favourites

You can save up to 12 of your own customised drying programmes (see “Favourites”).

Wash2Dry

A drying programme tailored to the laundry is set in conjunction with the connected washing machine.

Tip: The Wash2Dry function can only be used if the tumble dryer is connected to a network.

MobileStart

With MobileStart you can operate your tumble dryer remotely with the Miele app.

The Remote control setting must be switched on.

Touch the MobileStart sensor control and follow the instructions in the display.

Drying assistant

The Drying assistant guides you step by step so that you can select the optimum drying programme for your laundry (see “Drying assistant”).

Settings

You can alter the tumble dryer's electronics to suit changing requirements in the Settings menu (see “Settings”).

Examples on how to operate the appliance

Lists

Programmes menu

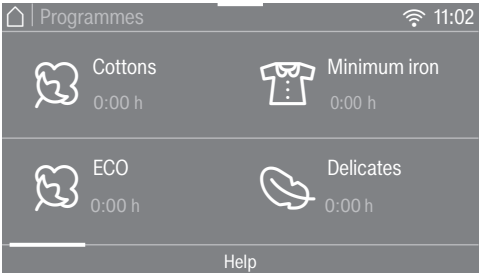

You can scroll right or left by swiping your finger across the screen. To do this, place your finger on the touch display and swipe it in the direction you want.

The orange scroll bar shows that there are further options to choose from.

Touch a programme name to select the drying programme.

The display will change to the standard menu for that programme.

Extras menu

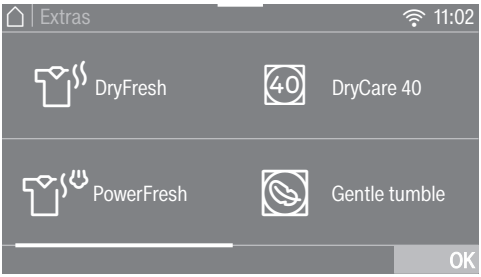

You can scroll right or left by swiping your finger across the screen. Place your finger on the touch display and swipe it in the direction you want.

The orange scroll bar shows that there are further options to choose from.

To select an extra, touch the corresponding sensor control.

The selected extra will be highlighted in orange.

To deselect the extra, simply touch the corresponding sensor control again.

Touch the *OK* sensor control to activate the highlighted extra.

Moving programmes

You can move the programmes around in the menu to change the sequence in which they are displayed.

- Place your finger on the programme you wish to move until a border is displayed around it.
- To move the programme, swipe your finger in the required direction.
- Remove your finger when the programme reaches the new location.

The programme has moved.

Setting numerical values

You can set numerical values in some menus.

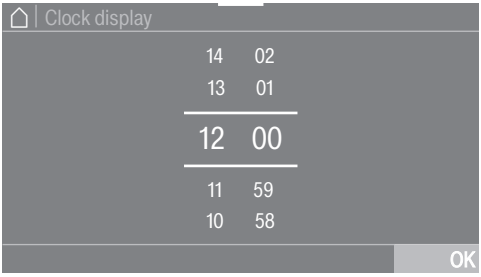

Enter the numbers by swiping upwards or downwards. Place your finger on the number that you want to change and move your finger in the direction you want. Use the OK sensor to accept all set figures.

Tip: Briefly touching the orange numbers between the two lines will bring up the numerical keypad. Once a valid number has been entered, the OK sensor will be highlighted green.

Pull-down menu

The pull-down menu can be used to display information, e.g. about a drying programme.

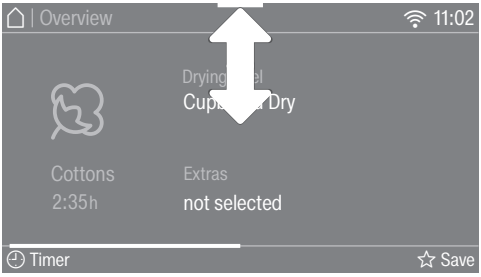

Touch the top edge of the screen in the middle and drag down with your finger.

Help display

With some menus Help appears along the bottom line of the display.

- Touch the Help sensor to display the text.
- Touch the Close sensor to return to the previous screen.

Exiting a menu

- Touch the ⮌ sensor to return to the previous screen.

Entries made before this which have not been confirmed with OK will not be saved.

Installation

Before using the appliance for the first time, check that you have followed all the instructions under “Installation”.

Read these operating instructions, paying particular attention to the information provided under “Installation”.

Removing the protective foil and stickers

■ Remove:

- Any protective film from the door
- Any stickers from the front and the lid

Please do not remove any labels (e.g. the data plate) which are visible when you open the door.

Downtime after installation

⚠ Damage to the tumble dryer by switching it on too soon.

This can damage the heat pump.

After setting up the tumble dryer wait for at least one hour before switching it on.

Miele@home

Your tumble dryer is equipped with an integrated WiFi module.

In order to use it you need:

- a WiFi network
- the Miele app
- a Miele user account. The user account can be created via the Miele app.

The Miele app will guide you as you connect your tumble dryer to your home WiFi network.

Once your tumble dryer is connected to your WiFi network you can use the app, for example, to carry the following activities:

- Controlling your tumble dryer remotely
- Calling up information on the operating status of your tumble dryer
- Calling up information on the programme sequence of your tumble dryer

Connecting your tumble dryer to your WiFi network will increase energy consumption, even when the tumble dryer is switched off.

Before installing the tumble dryer in its final location, ensure the signal strength is sufficient for your WiFi network.

Availability of the WiFi connection

The WiFi connection shares a frequency range with other appliances (including microwave ovens and remote control toys). This can give rise to sporadic or even complete connection failures. Therefore, the availability of featured functions cannot be guaranteed.

Miele@home availability

The ability to use the Miele app depends on the availability of the Miele@home service in your country.

The Miele@home service is not available in every country.

For information about availability, please visit www.miele.com.

Miele App

The Miele App is available to download free of charge from the Apple App Store® or from the Google Play Store™.

Download on the App Store

ANDROID APP ON Google Play

Switching on the tumble dryer

- Press the ⏻ button.

The welcome screen will light up.

The display will guide you step by step through the initial commissioning process.

Setting the language

You will be asked to select the language you require for the display. It is possible to change the language at any time via the Settings menu.

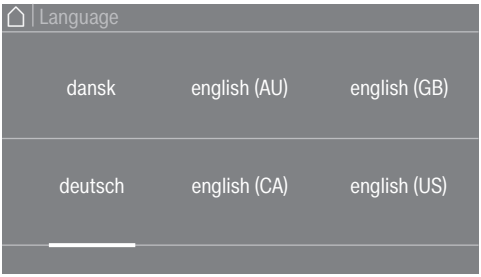

- Scroll to the left or the right until the language you want appears.
- Touch the sensor for the language you want.

The selected language will be highlighted in orange and the display will change to the next setting.

Setting up Miele@home

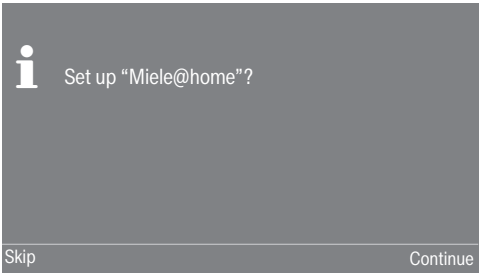

- To set up Miele@home now: touch the Continue sensor control.

Tip: To postpone setup until later: touch the Skip sensor control. The following message will then appear in the display:
ℹ It is possible to set up later in “Settings” / “Miele@home”.
Confirm with the OK sensor control.

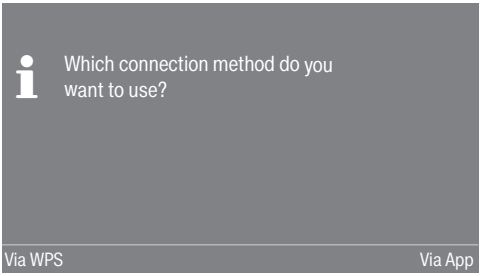

- Select the connection method you wish to use.

You will then be guided by the display and the Miele app.

You will require a WPS-compatible router for the Via WPS connection type.

- Activate the WPS function on your router within 2 minutes.

Setting the clock format

The time of day can be displayed as a 24 hour or 12 hour clock.

- Select the clock format you want and confirm this with the OK sensor.

The display will change to the next setting.

Setting the time of day

This message only appears if the tumble dryer has not yet been connected to a WiFi network.

The time of day is set automatically if connection is established with a WiFi network.

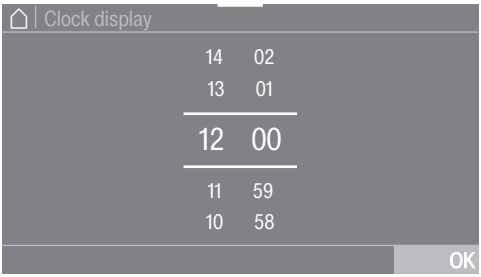

- Place your finger on the number that you want to change and move your finger in the direction you want.
- Confirm with the OK sensor.

The display shows further information.

Continuing with commissioning

- Please see “1. Notes on correct laundry care”.
- You can then select a programme and load the tumble dryer as described in “2. Loading the tumble dryer” and “3. Selecting a programme”.

The procedure for using for the first time is completed when a programme lasting longer than one hour has been carried out in full.

Energy saving tips

This dryer with heat-pump technology is designed for energy-saving drying cycles. However, you can save a little more energy with the following measures as the drying time is not extended unnecessarily.

- Make sure your laundry is spun at the maximum spin speed before drying. The higher the spin speed, the greater the savings that can be made in energy and time during drying, e.g. approx. 20 % energy can be saved if spun at 1600 rpm instead of 1000 rpm.
- Always dry using the maximum specified load size for the programme whenever possible. A full drum helps to save energy because you don't have to start another drying programme. This will mean that the energy consumption for the amount of laundry is at its most economical.
- Make sure that the room temperature is not too high. If there are other heat producing appliances in the room in which the dryer is located, make sure the room is well ventilated and switch the other appliances off, if possible.
- Clean the fluff filters in the door opening after every drying cycle.

Please refer to "Cleaning and care" for information on cleaning the fluff filters and the plinth filter.

- If possible, make use of time-variable, low-cost electricity tariffs. Ask your energy supplier for further information. Your tumble dryer's timer is helpful in this regard as you can select when during the next 24 hours you want the drying process to start automatically.

Feedback

You can view information about the energy consumption of your tumble dryer in the pull-down menu.

The following information will appear in the display:

- An estimate of the energy consumption before the programme begins.
- The actual energy consumption during the programme or at the end of the programme.

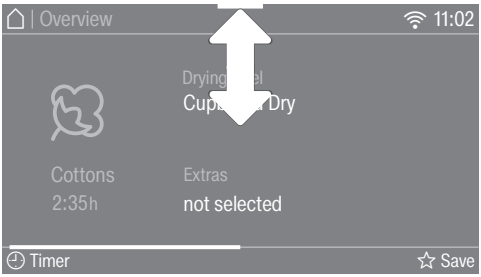

■ Open the pull-down menu.

1. Estimate

The estimated energy consumption level will be displayed as a bar chart before the programme starts.

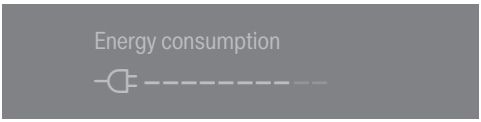

The more bars visible, the higher the energy consumption.

The estimate will vary depending on the drying programme, temperature and any extra options selected.

2. Actual consumption

The actual energy consumption and the costs can be viewed during the programme or at the end of the programme.

If the energy consumption is too low, < 0.1 kWh and Cost 0.00 will be displayed. See “Settings – Consumption” for more detailed information on costs.

The consumption and cost will alter as the programme progresses.

At the end of the programme, before opening the door, you can also call up the filter soiling level in % in the display.

Filter soiling
0 % = light
50 % = medium
100 % = heavy
Increased soiling will cause the programme duration to increase which in turn will increase energy consumption.

If the door is opened or the machine has switched off automatically at the end of the programme, the data will revert to the estimated consumption.

Tip: You can view the consumption data for the last drying programme and for total consumption (see “Settings – Consumption”).

1. Notes on correct laundry care

Points to note regarding washed laundry

- When washing very heavily soiled items ensure that you use sufficient detergent and select a high temperature. If in doubt, wash the items several times.
- Do not put soaking wet items into the tumble dryer. Make sure your laundry is thoroughly spun before drying. The higher the spin speed, the greater the savings that can be made in energy and time during drying.
- New dark coloured garments should be washed and dried separately from light coloured garments to avoid the danger of colours running and discolouring other garments or even plastic components in the dryer. Dark coloured fibres can also settle on light coloured garments and vice versa.
- Starched laundry can be dried in the tumble dryer. To achieve the usual finish, double the amount of starch should be used.

Preparing the laundry before drying

⚠ Damage due to foreign objects which were not removed from the laundry.
Foreign objects can melt, burn, or explode.
Ensure that any foreign objects, e.g. detergent dispensing balls, lighters, etc. have been removed from the laundry.

⚠ Risk of fire due to incorrect use and operation.
The laundry can burn and destroy the dryer and the surroundings.
See “Warning and Safety” instructions for further information.

- Sort the laundry according to the type of fibre and weave, size, garment care label symbol and the drying level required.
- Check seams and stitching to ensure that padding and linings are intact. This way you will avoid the danger of fillings coming out. These could catch fire when being dried.
- Disentangle the laundry.
- Tie together textile belts and ties.
- Fasten duvet covers and pillow cases to prevent small items from being rolled up inside them.
- Fasten hooks and eyes.
- Leave jackets open and undo any long zips so that textiles dry evenly.
- Sew in or remove underwiring from bras.
- If necessary, reduce the size of the load for these types of fabric. Easy care fabric tends to crease more, the larger the load. This is particularly the case for garments made from very fine weave fabric, such as shirts or blouses.

Drying

Tip: See the “Programme chart”, which contains everything you need to know about programmes and load sizes.

- Always observe the maximum recommended load size for each programme. This will mean that the energy consumption for the amount of laundry is at its most economical.
- Down-filled garments have linings which have a tendency to shrink, depending on the quality of the item. Only use the *Pre-Ironing* programme for these textiles.
- Pure linen should only be tumble dried if it is specified as suitable on the care label. The surface of the fabric may otherwise become rough. Only use the *Pre-Ironing* programme for these textiles.
- Woollens and wool blends are susceptible to becoming matted or shrinking. Only use the *Woollens handcare* programme for these textiles.
- Jersey fabrics (e.g. T-shirts, underwear) tend to shrink when they are washed for the first time. To prevent further shrinkage, avoid overdrying jersey fabrics. If possible, choose a slightly bigger size when buying garments made from jersey fabrics.
- If the fabrics are heat-sensitive or susceptible to creasing, reduce the load size. You should also select the *Gentle tumble* extra and, for particularly delicate textiles, the *DryCare 40* extra.

Care symbols

Drying	
	Temperature
	Normal or higher
	Reduced*
	Do not tumble dry

* Recommendation: select *DryCare 40* or *Gentle tumble*

Ironing	
	Temperature
	••• hot, •• medium, • lower
	Do not iron

Selecting the correct drying level

- *HygieneDry* for special hygiene requirements when drying resilient fabrics
- *Extra dry* for multi-layered and very thick fabrics
- *Cupboard Dry plus* for all fabrics that are to be put away immediately
- *Cupboard Dry* for fabrics that can shrink. Or for light cotton or jersey fabrics
- *Hand iron plus/Hand iron* or *Machine iron* for fabrics that are going to be pressed or ironed before they are put away

Tip: You can customise the drying levels (to be damper or drier) for the *Cottons*, *Minimum iron* and *Automatic* programmes. For further information, see “Settings – Programme sequence”.

2. Load the tumble dryer

Loading the laundry

Preventing damage to fabrics.
Before loading the dryer, read “1. Notes on correct laundry care”.

- Open the door.
- Remove any items that have been left inside the drum.
- Unfold the laundry and load loosely into the drum.

Do not overload the drum. Doing so will cause unnecessary wear and tear to the laundry and affect the drying result. It is also likely to cause more creasing.

Laundry items may be damaged if they get trapped by the door.

Checking the FragranceDos socket

If you are not using a fragrance flacon, check that the 2 FragranceDos sockets are closed.

The “Fragrance flacon” chapter describes how to use the fragrance flacon.

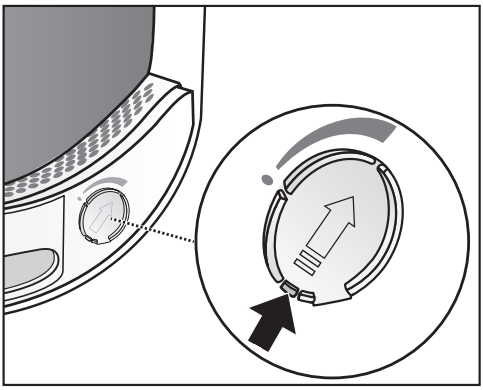

- Push the tab down completely (see arrow) so that the socket is closed. Otherwise, fluff will accumulate here.

Close the door

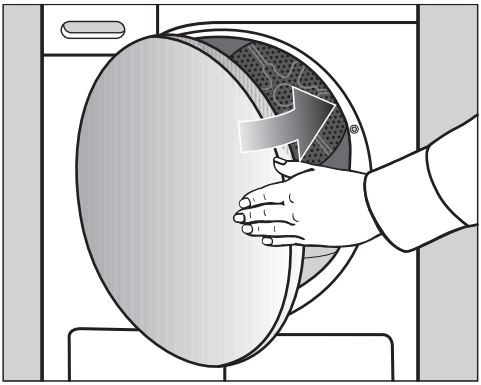

- Shut the door with a gentle swing.

Switching on the tumble dryer

- Touch the ⏻ sensor to switch the tumble dryer on.

Tip: The condensed water can be recycled when certain programmes are used.

See “Condensed water container – Filling the condensed water container”. To find out when the condensed water can be used as part of certain programmes, see the “Programme chart” and “Extras”.

Selecting a programme

There are various ways to select a programme.

- Touch the Programmes sensor control.

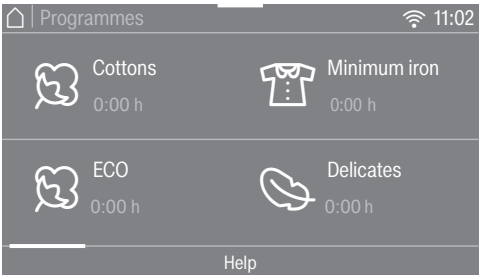

- Scroll to the right in the display until the programme you want appears.
- Touch the sensor control for that programme.

The display will change to the Overview menu.

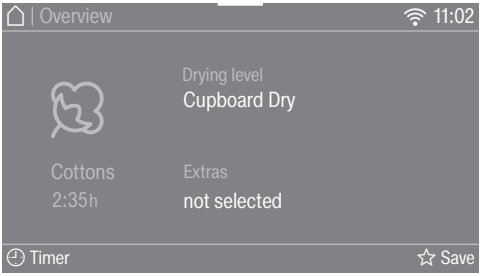

Tip: In the pull-down menu, you can display the maximum recommended load size for the selected programme.

There are 4 further ways of selecting a programme.

1. The Wash2Dry function
2. Favourites
3. The Drying assistant
4. MobileStart

Selecting the drying level

Check the “Programme chart” to see which programme you can select a drying level for and which drying level meets your requirements.

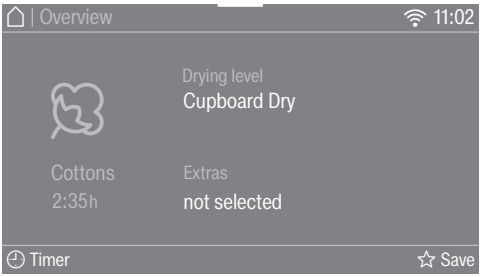

- Touch the Drying level sensor control.

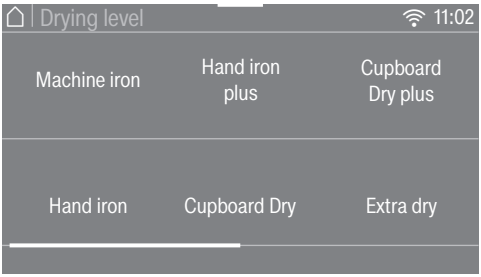

- Scroll in the display until the drying level you want appears.
- Touch the sensor control for the drying level.

HygieneDry drying level

Tip: Select this drying level to meet specific hygiene requirements for robust garments with the care symbol.

Items will be dried with a temperature that is constant over an extended period of time (extends the temperature holding time). This kills off micro-organisms (such as germs or dust mites) and reduces allergens in the laundry.

Tip: Reduce the load size for the corresponding programme to half the maximum load size specified in these operating instructions.

HygieneDry temperature holding time

- An estimated programme running time is displayed at the start of a programme.
- The programme completes the normal drying process for laundry care first. The drying time counts down to 0 minutes. Then the temperature holding time starts.
- At the start of the temperature holding time, the remaining programme running time is extended by 85 minutes to produce a hygienic drying result.

A programme for which the *HygieneDry* drying level has been selected should not be interrupted,
as this would prevent the micro-organisms from being killed off.
Do not cancel the drying programme.

Selecting the running time for time programmes

You can change the duration in 10-minute increments.

Programmes:
Cool air: 20 min – 1:00 h
Warm air: 20 min – 2:00 h
Basket programme: 40 min – 2:30 h

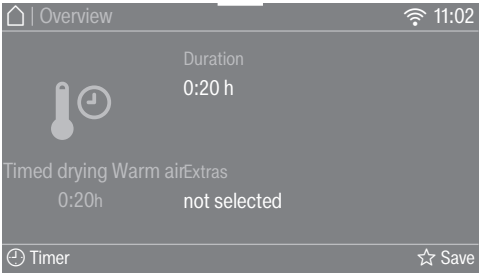

■ Touch the Duration sensor control (only in *Warm air* programme).

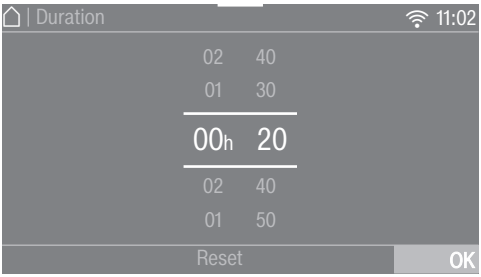

■ Place your finger on the number that you want to change and move your finger in the direction you want.

- Warm air

■ Confirm with the OK sensor control.

- Cool air, Basket programme

■ Touch the *Start/Stop* sensor control.

The programme starts.

Selecting extras

See “Extras” to find out which programmes allow you to select an extra and which extra is appropriate for your needs.

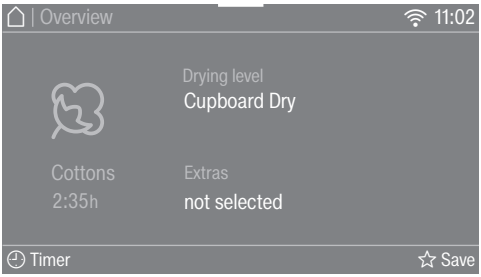

■ Touch the Extras sensor control.

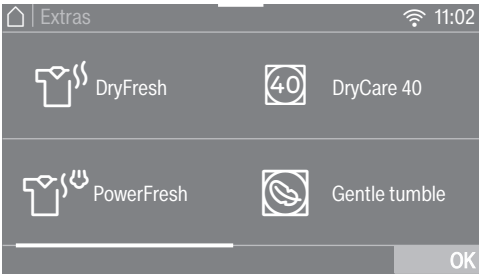

■ Touch the sensor control for the extra you want.

Tip: Touching the sensor control for an extra again allows you to deselect it.

■ Scroll through the display to see more extras.

■ Confirm with the OK sensor control.

The symbol for the selected extra is displayed.

Starting the programme

The programme can be started when the *Start/Stop* sensor control is flashing on and off.

■ Touch the *Start/Stop* sensor control.

The *Start/Stop* sensor control lights up constantly.

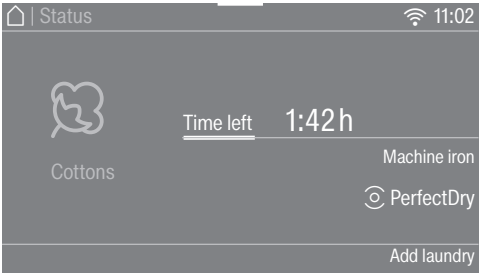

Drying and the programme duration remaining will light up in the display.

The laundry will be cooled down shortly before the end of the programme.

Tip: In the pull-down menu you can view the selected drying level or duration and the energy consumption.

The PerfectDry display will only light up with programmes with selectable drying levels:

- Hollow point ◎ after a programme has started

  The drying level reached will still be shown later on.

- Solid point ◉ when the drying level is reached

PerfectDry measures the residual moisture of the laundry. In programmes with selectable drying levels, PerfectDry dries the laundry precisely, although the result is also influenced by the calcium content of the water. PerfectDry continually adapts, constantly increasing the accuracy of the time left.

If you barely place anything inside the tumble dryer or load it with dry laundry, this will be sensed by the empty drum detection feature. The automatic load recognition function will restrict the running time of the selected programme once it has started and will continue to dry or air your laundry or textiles in a gentle manner.

To prevent laundry wearing out avoid overdrying it.

Energy savings

After 10 minutes, the indicators dim and the *Start/Stop* sensor starts flashing.

■ Touch the *Start/Stop* sensor to switch the indicators on again (this does not have any effect on a running programme).

The drum lighting switches off once the programme has started.

Adding laundry

You can add laundry items after the programme has started.

■ Follow the description in “Changing the programme sequence – Adding or removing laundry”.

End of programme

The programme is finished when Finish/ Anti-crease or Finish/Cooling down appears in the display. The *Start/Stop* sensor control is no longer lit.

The tumble dryer will switch off automatically 15 minutes after the end of the Anti-crease phase (with programmes without an Anti-crease phase it will switch off 15 minutes after the end of the programme).

Unloading the drum

Only open the door when the drying process has finished. Otherwise, the laundry will not be properly dried through and cooled down.

- Pull the door open at the side with the orange marker.

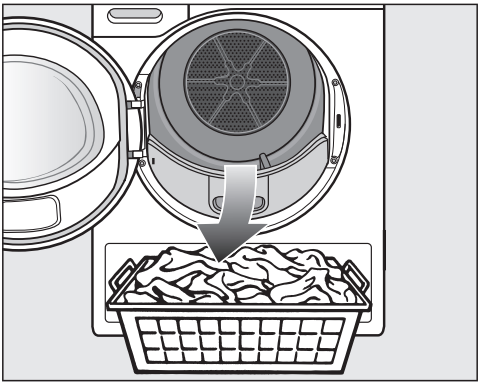

- Remove the laundry.

Items left in the dryer could be damaged by overdrying when the dryer is used the next time.
Always remove all items from the drum.

- Touch the ⏻ sensor to switch the tumble dryer off.
- Remove the fluff from the 2 fluff filters in the door opening: see “Cleaning and care – Fluff filters”.
- Shut the door gently.
- Empty the condensate container.

Tip: When drying a full load in the *Cottons* and *ECO* programmes, we recommend that you drain the condensed water externally through the drain hose. This will mean you do not need to empty the condensate container at intermittent periods.

Drum lighting

When you open the door of the tumble dryer, the drum is illuminated along with the area immediately in front of the dryer. This prevents you from accidentally leaving behind any items in the drum or in your laundry basket.
The drum lighting will go out automatically to save energy.

Tip: To switch the lighting on again, open the pull-down menu from the overview menu and then touch the ☼ sensor.

Programme chart

All weights marked with * are based on the weight of dry laundry.

Cottons	**max.** 9 kg*
HygieneDry	
Use for	- Cottons and linen fabric which will be in direct contact with the skin, e.g. underwear, baby clothes, bed linen, towelling. - Other hard-wearing fabrics with special hygiene requirements.
Tip	- Use for special hygiene requirements. - Reduce to half the maximum load size.
Extra dry, Cupboard Dry plus, Cupboard Dry	
Use for	Single and multi-layered cotton items. For example, T-shirts, underwear, baby clothes, workwear, jackets, covers, aprons, overalls, hand towels, bath towels, bathrobes and flannelette/bed linen.
Tip	- Select *Extra dry* for multi-layered and very thick fabrics. - Do not use *Extra dry* for jersey fabrics (e.g. T-shirts, underwear, baby clothes) because they can shrink.
Hand iron plus, Hand iron, Machine iron	
Use for	All cotton or linen fabrics requiring further processing. For example, table linen, bed linen, or starched laundry.
Tip	To prevent laundry from drying out, it should be rolled up until you are ready for ironing.

ECO	**max.** 9 kg*
Use for	Cotton items such as those described under *Cottons Cupboard Dry* with normal residual moisture.
Note	- In the *ECO* programme, the *Cupboard Dry* degree of dryness is achieved. - The *ECO* programme is the most energy-efficient for drying cotton items with normal residual moisture levels.
Note for test institutes	- The *ECO* programme is the test programme in accordance with Regulations (EU) 2023/2533 and (EU) 2023/2534 for the energy label measured in accordance with EN 61121. This programme is used to evaluate compliance with the EU Ecodesign legislation. - With the *Cottons* and *ECO* programme settings, drain the condensed water externally through the drain hose.
Minimum iron	**max.** 4 kg*
HygieneDry, Cupboard Dry plus, Cupboard Dry, Hand iron plus, Hand iron	
Use for	Minimum iron fabrics made of synthetic, cotton or mixed fibre. For example, workwear, overalls, pullovers, dresses, trousers, table linen and tights.
Tip	- Use *HygieneDry* for hard-wearing fabrics with special hygiene requirements. - Reduce to half the maximum load size.
Delicates	**max.** 2.5 kg*
Cupboard Dry, Hand iron plus, Hand iron	
Use for	Delicate items with the care symbol made of synthetic fibre, mixed fibre, rayon and minimum iron cotton. For example, shirts, blouses, lingerie and appliquéd garments.
Tip	The load should be reduced further for a particularly crease-free drying process.
Bed linen	**max.** 4 kg*
HygieneDry, Extra dry, Cupboard Dry plus, Hand iron plus, Hand iron, Machine iron	
Use for	Bed linen, pillowcases
Tip	- Use *HygieneDry* for hard-wearing fabrics with special hygiene requirements. - Reduce to half the maximum load size.

Programme chart

Automatic	**max.** 5 kg*
Cupboard Dry plus, Cupboard Dry, Hand iron plus, Hand iron	
Use for	Mixed load of garments suitable for the *Cottons* and *Minimum iron* programmes.
Woollens handcare	**max.** 2 kg*
Use for	Woollen garments and fabric containing wool blends, e.g. pullovers, cardigans, tights.
Note	- Wool and wool blend items are only fluffed up; they are not dried completely. - Remove the garments as soon as the programme has finished.
Silks handcare	**max.** 1 kg*
Use for	Silk garments which are suitable for drying in the tumble dryer, e.g. blouses and shirts
Note	- This programme reduces creasing. Items are not dried completely by this programme. - Remove the garments as soon as the programme has finished.
Express	**max.** 4 kg*
Extra dry, Cupboard Dry plus, Cupboard Dry, Hand iron plus, Hand iron, Machine iron	
Use for	Fabrics with the ⊡ symbol that are suitable for the *Cottons* programme.
Note	The programme running time is shorter.
Shirts/Blouses	**max.** 2 kg*
Cupboard Dry plus, Cupboard Dry, Hand iron plus, Hand iron	
Use for	Shirts and blouses
Denim	**max.** 3 kg*
Cupboard Dry plus, Cupboard Dry, Hand iron plus, Hand iron	
Use for	All denim garments, e.g. jackets, jeans, shirts and skirts.

Steam care	**max.** 1 kg*
Cupboard Dry, Hand iron	
Use for	- All items made of cotton or linen - For minimum iron items made of cotton, mixed fibre or synthetic fibre. For example, cotton trousers, anoraks and shirts.
Tip	- For dampening fabrics before ironing - For smoothing fabrics that are creased - To enhance the effect, you can use the DryFresh fragrance flacon (optional accessory).
Note	- The condensed water container must be filled with water to at least the —min— mark. - You may just be able to hear the water as it is being sprayed into the drum.
Sportswear	**max.** 3 kg*
Cupboard Dry plus, Cupboard Dry, Hand iron plus, Hand iron	
Use for	Sportswear which is suitable for drying in a tumble dryer.
Basket programme	**Max. load for basket** 3.5 kg
Note	- This programme may only be used with the Miele dryer basket (optional accessory). - Use this programme to dry or air items which are suitable for drying in a tumble dryer but which are not suitable for drying using mechanical action. - Always follow the operating instructions for the tumble dryer basket!
Fabrics/ items	See the operating instructions supplied with the dryer basket.
Outerwear	**max.** 2.5 kg*
Cupboard Dry, Hand iron plus	
Use for	Outdoor clothing which is suitable for tumble drying.

Programme chart

Proofing	**max.** 2.5 kg*
Use for	Fabrics suitable for tumble drying, e.g. microfibre fabrics; skiwear; outdoor clothing; fine, close-weave cotton garments (poplin); and tablecloths.
Note	- With this programme, items can only be dried to the *Cupboard Dry* level. - This programme includes an additional proofing fixing phase. - Only use proofing agents which are stated by the manufacturer as being “suitable for use on membrane fabrics”. These agents contain fluorochemical compounds. - Do not dry fabrics which have been treated with proofing agents containing paraffin. This poses a fire hazard.
Warm air	**max.** 9 kg*
Use for	- Multi-layered fabrics whose layers have different drying characteristics, e.g. jackets, pillows, sleeping bags and other bulky items. - For drying individual items, e.g. bath towels, bathing costumes and tea towels.
Tip	Do not select the longest drying time to start with. Check the items as you are drying them to find the optimum time.
Cool air	**max.** 9 kg*
Use for	Any item which only needs airing.
Pillows **Large pillows**	1–2 pillows 40 x 80 cm or 1 pillow 80 x 80 cm
HygieneDry, Cupboard Dry	
Use for	Pillows suitable for drying in a tumble dryer, with feather, down or synthetic fillings.
Tip	*HygieneDry* for special hygiene requirements.
Note	- Feathers have a tendency to develop a strong odour when they are warm. Allow bedding to air outside the tumble dryer after tumble drying. - Pillows can still feel damp after being dried. You can use this programme several times until the pillow feels dry.

Cottons hygiene	**max.** 4 kg*
HygieneDry	
Use for	Cottons and linen fabric which will be in direct contact with the skin, e.g. underwear, baby clothes, bed linen, towelling.
Note	- Use *HygieneDry* for hard-wearing fabrics with special hygiene requirements. - In this programme, the items will be dried with a temperature that is constant over an extended period. This temperature holding time kills off micro-organisms such as germs or dust mites and reduces allergens in the laundry. Therefore, this programme should not be interrupted as this would prevent the micro-organisms from being killed off.
Pre-ironing	**max.** 1 kg*
Cupboard Dry, Hand iron	
Use for	- Cotton and linen fabrics. - For minimum iron items made of cotton, mixed fibre or synthetic fibre. For example, cotton trousers, anoraks and shirts.
Tip	- This programme smoothes out creasing caused during the spin cycle in the washing machine. - This programme is also suitable for dry fabrics. - Please remove the garments as soon as the programme has finished.

The drying programmes can be augmented with various extra options. The table lists the selection options.

DryFresh

The *Cupboard Dry* drying level can be used to freshen up clothing that is clean and dry without wetting it.

The function is slightly less effective when used with fabrics made of synthetic fibres.

Tip: To enhance the effect, you can also use the *DryFresh* fragrance flacon (optional accessory). and reduce the size of the load.

DryFresh is not available for all drying levels.

PowerFresh

This option can be used to freshen up clothing that is clean and dry by using steam.

The fabrics are moistened automatically. As the item is dried, the heat from the generated water vapour is transferred to the item strategically so that odour molecules in the fabric can be freed more easily.
The function is slightly less effective when used with fabrics made of synthetic fibres.

Reduce the size of the load to 1 kg.

PowerFresh is not available for all drying levels.

Tip: To enhance the effect even further, you can also use the *DryFresh* fragrance flacon (optional accessory).

Condensed water from the condensed water container is sprayed into the drum. The condensed water container must therefore be filled to at least the —min— mark.

■ Fill the condensed water container.

See “Condensed water container — Filling the condensed water container”.

DryCare 40

This option dries fabrics gently at very low temperature.

It can be used for all fabrics that are free of wool and are washable at temperatures of 40 °C and above.

For the best possible drying result: Reduce the load size for the corresponding programme to half the maximum load size specified in these operating instructions.
Exceptions: you must reduce programmes with a maximum load size of 9 kg to 4 kg.

DryCare 40 is not available for all drying levels.

Gentle tumble

The items are dried at a gentle temperature.

Suitable for all items with the ⊡ symbol, e.g. those made from acrylic.

The programme running time is longer.

Freshen up

Odours are reduced in clean clothing.

The textiles are aired to the *Cupboard Dry* drying level.

Tip: Dampen the clothing and use a fragrance flacon to enhance the freshening effect.

Drying programme overview - Extras

	DryFresh	PowerFresh	DryCare 40	Gentle tumble	Freshen up
ECO	–	–	–	–	–
Cottons	X	X	X	X	X
Minimum iron	X	X	X	X	X
Delicates	–	–	✓	–	–
Bed linen	–	–	–	–	–
Automatic	X	X	X	X	–
Woollens handcare	–	–	–	–	–
Silks handcare	–	–	✓	–	–
Express	–	–	–	–	–
Shirts	X	X	X	X	X
Denim	X	X	X	X	X
Steam care	–	–	–	–	–
Sportswear	–	–	X	X	–
Basket programme	–	–	–	–	–
Outerwear	–	–	X	X	–
Proofing	–	–	–	–	–
Timed drying Warm air	–	–	X	X	–
Timed drying Cool air	–	–	–	–	–
Pillows Large pillows	–	–	–	–	–
Cottons hygiene	–	–	–	–	–
Pre-ironing	–	–	✓	–	–

X = Selectable
– = Not selectable
✓ = Activated automatically

The extra options cannot be combined with one another.

Once the programme has come to a proper end, the Miele washing machine transfers the programme data via the router to which the networked tumble dryer is also connected, as well as transferring it to the Miele Cloud. The tumble dryer automatically sets a drying programme tailored to the laundry based on the transferred programme data.

All you need to do is start the drying programme once you have loaded the tumble dryer. No further programme settings are required on the tumble dryer.

Tip: The drying programme must be started within 24 hours of the end of the wash programme. The data will be kept available for the tumble dryer during this period, but will be overwritten when a new wash programme ends.

Tip: Do not disconnect the tumble dryer from the network. The programme data transferred by the washing machine will be received by the tumble dryer as soon as you select *Wash2Dry*.
If you have disconnected the appliance from the network beforehand, this will cause a delay in receiving the data.

Requirements for use

In order to use the *Wash2Dry* function, the Miele washing machine and tumble dryer must be networked using Miele@home services.

Tip: Set up Miele@home as described in “Before using for the first time”.

Selecting the Wash2Dry function

Please wait lights up in the display of the tumble dryer while the wash programme is running.

Once the washing machine programme has come to a proper end, the drying programme tailored to the laundry will be displayed.

- Once the wash cycle has ended, place the clean laundry in the tumble dryer.
- To start the programme, all you need to do is press the *Start/Stop* sensor control on the tumble dryer.

The programme will not start on this tumble dryer after washing delicate textiles (e.g. curtains) in special wash programmes.

To create a Favourite programme

You can save your own customised programmes under names of your choice.

There are 2 ways to create a Favourite programme.

Option 1

- The main menu must be visible in the display. Touch the Favourites sensor control.

The display will change to show the Favourites menu.

- Touch the Create sensor control.

The display will change to the Create Favourites menu.

- Select the programme you want to use.
- Select all the programme settings you want.
- Then select Save.
- Enter a name.

Option 2

You can save a programme which has been selected as a Favourite programme before you start it.

- Before the programme starts, touch the ☆ Save sensor.
- Enter a name.

If 12 Favourites have already been saved, the Create or ☆ Save sensor will not be visible. Delete an existing Favourite if you wish to create a new one.

To enter a name

It is best to select short, memorable names.

- Touch the letters or characters you want.
- Confirm with the Save sensor.

The programme will then be saved to the Favourites programme list.

To change a Favourite programme

You can rename, delete or move a Favourite programme.

- Select the Favourites sensor control from the main menu.
- Touch the Favourite programme that you wish to change until the context menu opens.
- Select Rename, Delete or Move.

The Drying assistant helps you when drying a wide variety of items. The tumble dryer will use the list of items to put together a suitable drying programme.

- Scroll to the second page in the main menu.
- Touch the Drying assistant sensor.

A list will open. The drying purpose is grouped into different areas.

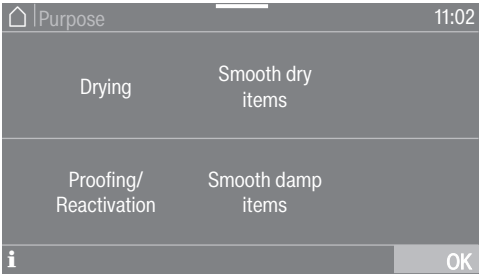

Tip: Touch the ℹ sensor to find out more about each purpose.

- Touch the sensor for the Purpose which matches your drying requirement.

A list of items will appear.

- Touch the appropriate sensor for your item of laundry.

The item selected will be highlighted orange. You can select several items.

With some items, helpful information will also appear in the display when they are selected.

- Confirm with the OK sensor.
- Follow the instructions in the display.

A summary of the selected parameters will then appear in the display.

- Confirm with the OK sensor or select change if you would like to make any changes.

The programme which has been tailored to your laundry is ready to start.

Tip: You can add individual programme settings, e.g. Extras before you start the programme.

Timer

The timer can be used to set the time you wish a programme to finish or start at. The programme start can be delayed by up to 24 hours.

Setting the timer

- Touch the ◷ Timer sensor.
- Select the Finish at or Start at option.
- Set the hours and the minutes with the OK sensor.

Changing the timer

The selected times for the timer can be changed before the programme starts.

- Touch the ⏱ or ⏱ sensor control.
- If required, change the specified time and confirm with the OK sensor control.

Deleting the timer

The selected time for the timer can be changed before the programme starts.

- Touch the ⏱ or ⏱ sensor control.

The selected time for the timer appears in the display.

- Touch the Delete sensor control.
- Confirm with the OK sensor control.

The selected time for the timer is now deleted.

Starting the timer

- Touch the *Start/Stop* sensor control.

The time until the programme starts will appear in the display.

After the programme has started, the selected time for the timer can only be changed or cancelled by interrupting the programme.

The programme can be started immediately at any time.

- Touch the Start immediately sensor control.

Adding laundry during ongoing delay start period

- Follow the description in “Changing the programme sequence – Adding or removing laundry”.

If a longer time is set for the timer, the drum will rotate occasionally to untangle the laundry. This is not a fault.

SmartStart

The SmartStart function lets you define a time period during which your tumble dryer will start automatically. The appliance will start on receipt of a signal, e.g. from your energy supplier, that indicates that the electricity tariff is particularly economical.

This function is active when the SmartGrid setting is switched on.

The timeframe can be defined between 1 minute and 24 hours. During this period, the tumble dryer waits for the signal from the energy supplier. If no signal is sent during the defined period, the tumble dryer starts the drying programme.

Setting the time period

If you have activated the *SmartGrid* function in the settings, *SmartStart* or *SmartFinish* will appear in the display instead of *Start at* or *Finish at* when you touch the *Timer* sensor control ◷ (see “Settings – SmartGrid”).

The procedure is the same as for setting the time for the timer.

- Now set the time you want and confirm with the OK sensor control.
- Touch the *Start/Stop* sensor control to start the drying programme with SmartStart.

The selected programme will start automatically, as soon as the energy supplier has sent the signal, or the latest calculated start time has been reached.

The procedure for changing or deleting the SmartStart function is the same as described in “Changing the timer” and “Deleting the timer”.

Changing a programme once it has started

You cannot change to another programme once a programme has started (this prevents unintentional alterations).

You will need to cancel the current programme before you can select a new one.

Cancelling a programme

- Touch the *Start/Stop* sensor.

The following will appear in the display:
ℹ Cancel the programme?

- Select Yes.

The following appears in the display:
Programme cancelled.

- Open the door.

Selecting another programme

- Close the door.
- Select the programme you want.
- Touch the *Start/Stop* sensor.

Adding or removing laundry

You have forgotten something but the programme is already running.

- Touch the Add laundry sensor control.

Add laundry and The door can be opened. appears in the display. The *Start/Stop* sensor control flashes slowly.

- Open the door.
- Add or remove laundry items.
- Close the door.
- Touch the *Start/Stop* sensor control.

The programme continues.

Exceptions when adding laundry

In some cases, for example, during the cooling phase or the *Proofing* programme, it is not possible to add laundry items.

In exceptional cases, the door can be opened while the programme is running.

Emptying the condensed water container

The condensed water is collected in the condensate container.

Emptying interval: empty the condensate container after every drying programme.

When the maximum level in the condensed water container is reached, the following message will light up in the display: Empty the container or check the drain outlet

- To clear the message, open and close the door with the tumble dryer switched on.

⚠ Damage to the door and the fascia panel when removing the condensed water container.
The door and the fascia panel can sustain damage.
Always close the door completely.

* This does not apply to right-hand hinged models.

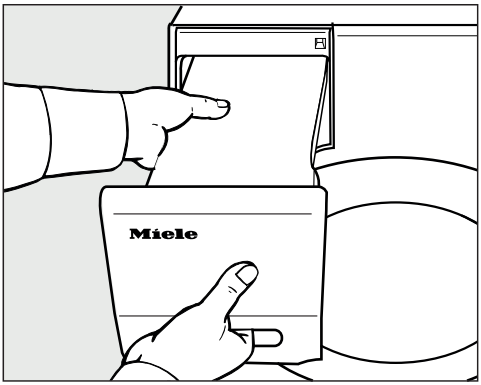

- Remove the condensed water container.
- To prevent water from running out, keep it in a horizontal position when carrying it. Hold the condensed water container by the front panel and at the back.

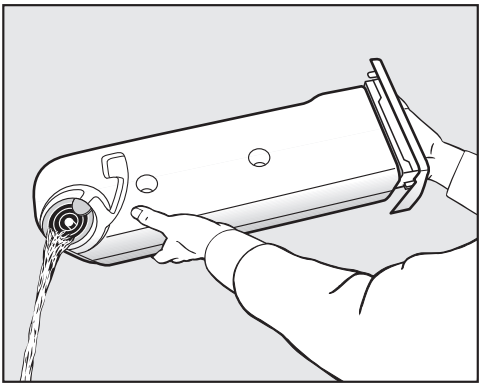

- Empty the condensed water container.
- Replace the condensed water container in the dryer.

Condensed water can cause health problems in people and animals.
Do not drink condensed water.

Condensed water container

Tip: When certain programmes are being used, water is taken from the condensate container and recycled. For this, the condensate container must be filled to a certain level, see “Filling the condensate container”.

Tip: Condensation water can be reused for ironing. For this, you should pour the condensed water through a fine sieve or a coffee filter. If you want to reuse condensed water in a steam iron or humidifier, follow the manufacturer’s instructions.

Filling the condensate container

When certain programmes are being used, condensed water generated during drying is recycled and sprayed into the drum via a spray nozzle.

The condensed water container must therefore be filled to at least the —min— mark. Otherwise, this could cause a fault.

The —min— mark is on the front left-hand side of the container. If you have set the appliance up so that condensed water is drained away, the condensed water container will be empty.

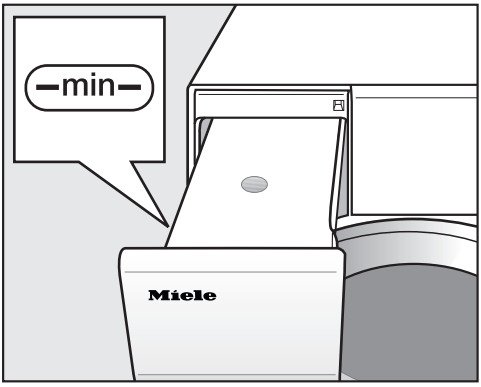

- Check the fill level of the condensed water container.
- Only fill it with commercially available condensed water (for ironing).

You should only use fresh water in exceptional circumstances.
If fresh water is used frequently, limescale can build up on the spray jet in the door opening.

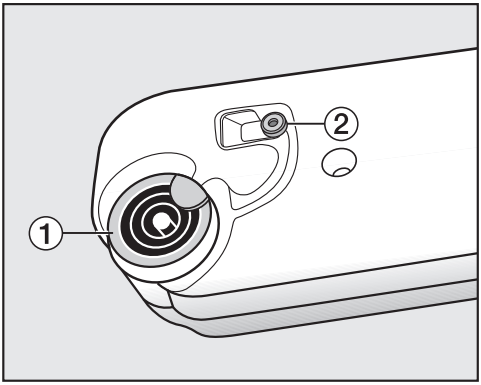

1 spout, **2** rubber seal

- Pour the condensed water through the rings on the spout **1**.

The spray jet in the door opening can suffer a blockage.
It should only be filled with clean water. The water must not contain any fragrance, detergent or other substances.

A fluff filter in the condensate container prevents any fluff from being sucked out of the condensed water.

Cleaning the rubber seal

If fresh water is used frequently, limescale deposits can build up on the rubber seal **2**.

Cleaning recommendation: clean once or twice a year and as required.

- Use a damp cleaning cloth to carefully remove any limescale deposits from the rubber seal **2**.

FragranceDos

Fragrance flacons (optional accessories) can be used to give your laundry a pleasant scent.

This dryer has 2 places for inserting fragrance flacons. This gives you a choice of how to use them.

- You can use both positions if you wish to change from one scent to another. You can close the fragrance flacon that you are not using.
- Use both positions if you want a more intense scent of the same fragrance. Or if you wish to conveniently switch between a scent for normal laundry and DryFresh to freshen up your laundry.
- Use one socket only if you only want to use the one fragrance.

⚠ Risk of fire and damage to health if fragrance flacons are used incorrectly.

The leaked fragrance can damage your health if it comes into contact with your body. Leaked fragrance can cause fire.

Before using a fragrance flacon, please read “Warnings and safety notes”, “Using the fragrance flacon (optional accessory)”.

Removing the protective seal from the fragrance flacon

Only hold the fragrance flacon as illustrated. Do not hold it at an angle or tip it, as the fragrance will leak out of it.

■ Take the fragrance flacon out of its packaging.

Do not attempt to open the fragrance flacon.

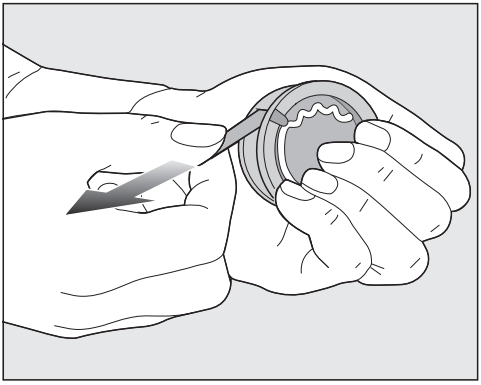

■ Hold the fragrance flacon securely so that you do not open it by mistake.

■ Pull off the protective seal.

Inserting the fragrance flacon

■ Open the door of the tumble dryer.

The fragrance flacon is inserted in the upper fluff filter. They can be fitted on the left and the right hand side next the opener.

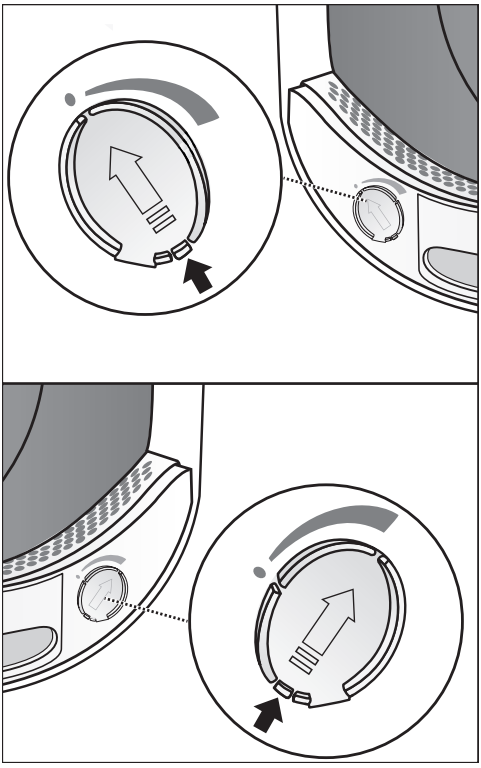

■ Open the cover using the tab until the tab is right at the top as shown.

To prevent the accumulation of fluff, the cover of the unused socket must remain closed.

Push the tab of the cover to the bottom (see arrow), until you hear it click into position.

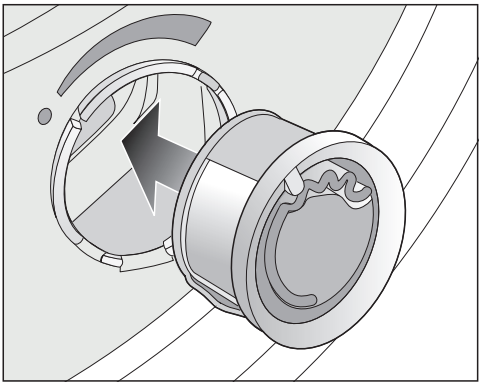

■ Insert the fragrance flacon into the socket as far as it will go.

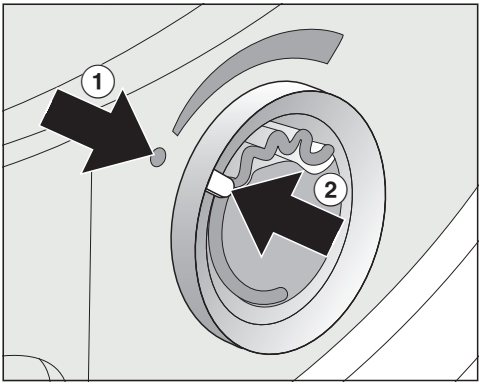

Markers ① and ② must line up with one another.

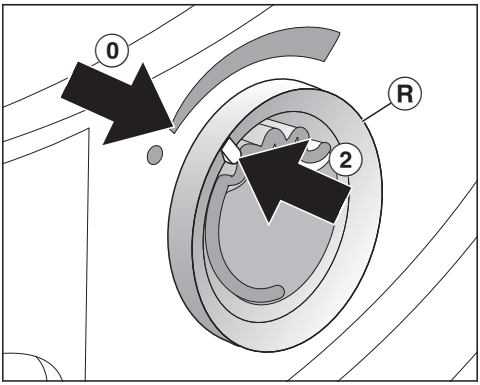

■ Turn the outer ring Ⓡ clockwise a little.

The fragrance flacon can slip out.
Turn the outer ring in such a way that markers ② and ⓪ line up.

Opening the fragrance flacon

Before drying, you can select the intensity of the fragrance.

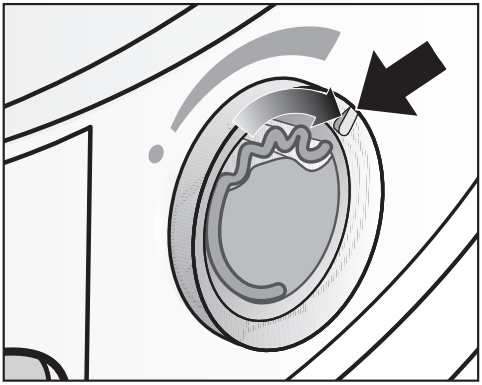

■ Turn the outer ring clockwise: the further you open the fragrance flacon, the more intense the fragrance.

Damp laundry and longer drying durations with sufficient heat transfer are needed for the fragrance to be released into the laundry effectively. The fragrance will also be noticeable in the room air during the process. The *Cool Air* programme will not generally apply fragrance.

Closing the fragrance flacon

After drying, the fragrance flacon should be closed to prevent the fragrance from escaping needlessly.

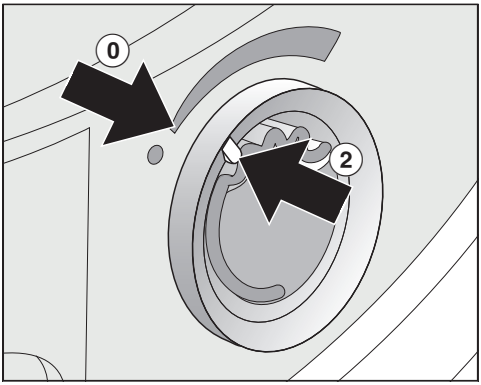

■ Turn the outer ring counter-clockwise until marker ② is in position ⓪.

If you wish to dry without the fragrance occasionally: remove the fragrance flacon and store it in its original packaging.

Replace the fragrance flacon with a new one when the intensity of the fragrance is no longer sufficient.

Removing/replacing the fragrance flacon

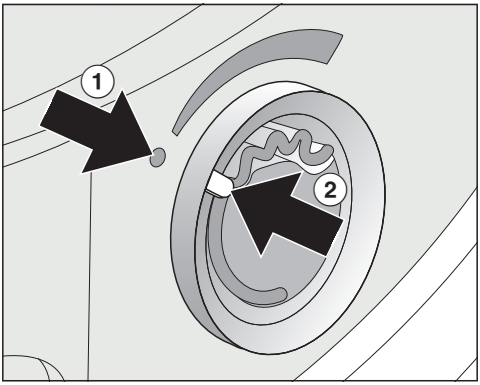

■ Turn the outer ring anti-clockwise until the markers ① and ② line up.

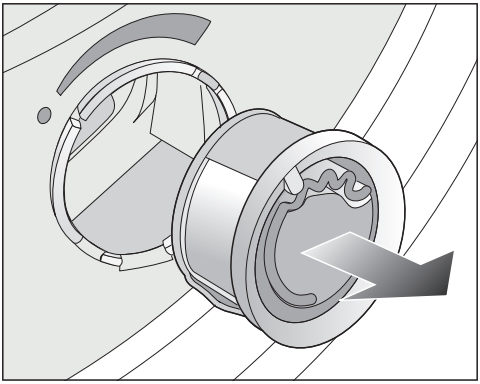

■ Replace the fragrance flacon with a new one.

When not in use, you can store the fragrance flacon in its original packaging.

Replacement interval: replace the fragrance flacon when it is empty or the fragrance is no longer sufficient.

Fragrance flacons are available to order from Miele dealers, Miele Customer Service or online.

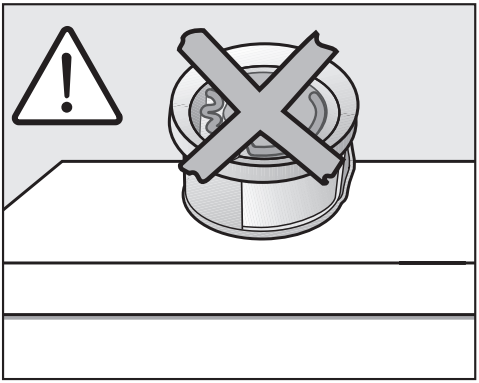

The fragrance can leak out of the flacon.
Do not lay the fragrance flacon down.

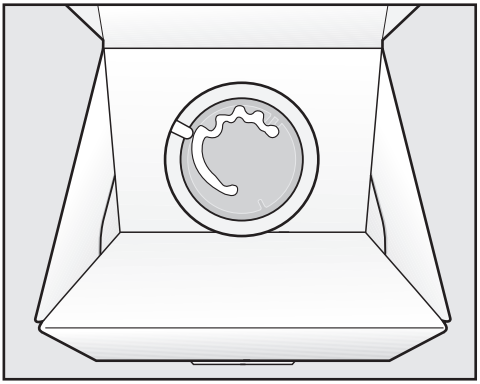

- If you are keeping the fragrance flacon in its original packaging, do not store the packaging upright on its edge or upside down. Otherwise, the fragrance will leak out.
- Always store in a cool, dry place away from direct sunlight.
- When purchasing new fragrance flacons, only remove the protective seal just before use.

Fluff filters

Environmental impact due to fluff which has been disposed of incorrectly.

To prevent microplastics from spreading into the waste water system, fluff must not be drained away with the water.

Dispose of the fluff collected by the fluff filters with your household waste.

This tumble dryer has 2 fluff filters in the loading area of the door. Both fluff filters trap fluff produced during the drying process.

Cleaning interval: clean the fluff filters after each drying programme.

Also clean the fluff filters when the following message lights up in the display: Clean the fluff and plinth filters. See the operating instruction manual for more information.

The programme running time is extended if you do not clean the filters.

The programme is aborted and a fault occurs.

- To clear the message, confirm with OK.

Removing the fragrance flacon

The intensity of the fragrance will be diminished if the fluff filters and the plinth filter are not cleaned.

- Remove the fragrance flacon. See “Fragrance flacon”, “Removing/replacing the fragrance flacon”.

Removing visible fluff

Tip: You can also use a vacuum cleaner so that you can remove the fluff without touching it.

- Open the door.

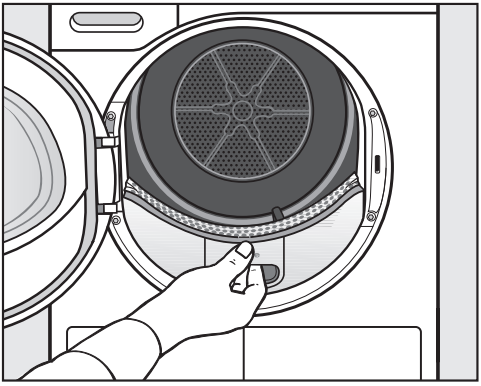

- Pull the upper fluff filter forwards to remove it.

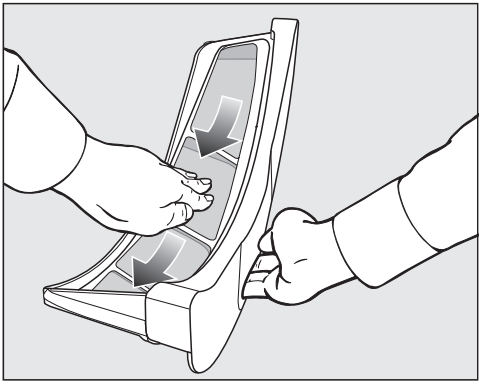

- Remove the fluff (see arrows).

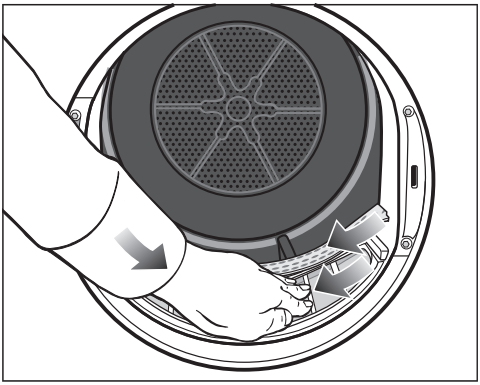

- Remove the fluff (see arrows) from the surface of all the fluff filters and the perforated laundry deflector.
- Push the upper fluff filter back into position until it clicks. Close the door.

Cleaning the fluff filters and air flow openings thoroughly

If the drying time has become longer or the surface of the fluff filters is visibly compacted with fluff, you should carry out the following cleaning procedure.

- Remove the fragrance flacon. See “Fragrance flacon”.
- Pull the upper fluff filter forwards to remove it.

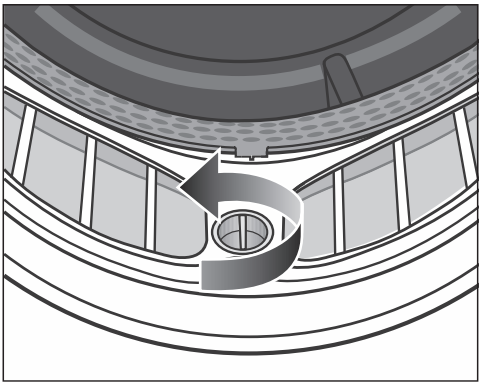

- Turn the yellow rotary control on the lower fluff filter in the direction of the arrow (until you hear it click).

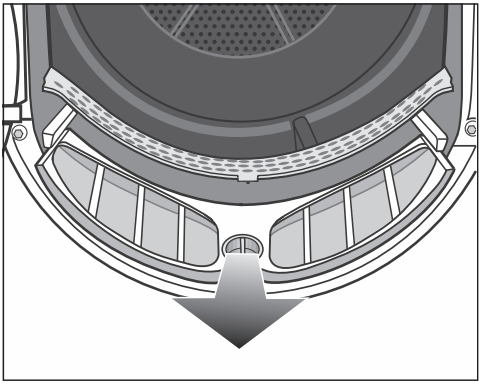

- Hold the rotary control and pull the fluff filter forwards to remove it.

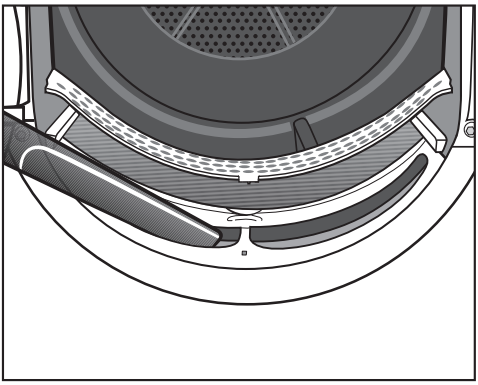

- Use a vacuum cleaner with a long crevice nozzle attached to remove any visible fluff from the upper air flow openings.

Clean all fluff filters with water.

Cleaning the fluff filters with water

- Wipe the smooth plastic surfaces of the fluff filters with a damp cloth to clean them.
- Flush the filters through under warm running water.
- Shake the fluff filters thoroughly and then dry them carefully.

Ensure the filters are dry before replacing them. Wet filters could cause operational faults.

- Push the lower fluff filter in completely and lock it with the yellow dial.
- Push the upper fluff filter in completely.
- Close the door.

Cleaning the plinth filter

Environmental impact due to fluff which has been disposed of incorrectly.

To prevent microplastics from spreading into the waste water system, fluff must not be drained away with the water.

To collect the cleaning water, clean the plinth filter in a bowl or bucket.

Cleaning interval: clean the plinth filter when the programme running time is longer than usual or if the following message lights up in the display: Clean the fluff and plinth filters. See the operating instruction manual for more information.

The programme running time is extended if you do not clean the filter.

The programme is aborted and a fault occurs.

- To clear the message, confirm with OK.

Removing the plinth filter

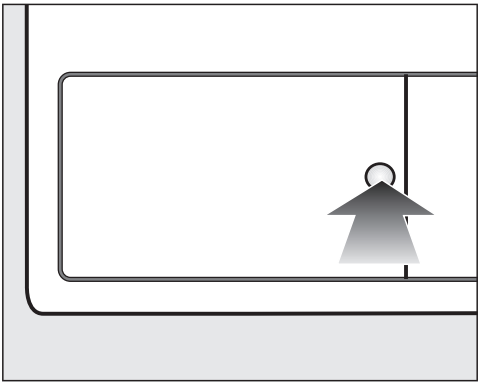

- Press the round, indented area on the heat exchanger access panel to open it.

The flap will spring open.

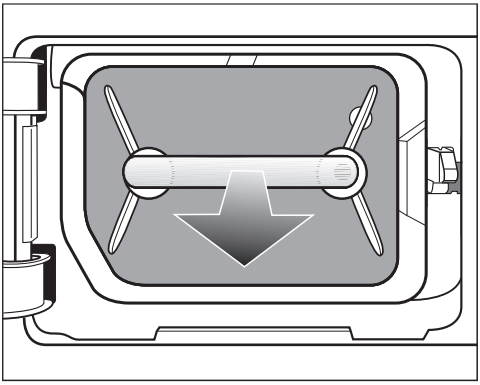

- Pull the plinth filter out by the handle.

The right-hand guide pin comes out when the plinth filter is removed. The guide pin prevents the access panel from closing without the plinth filter.

Cleaning the plinth filter

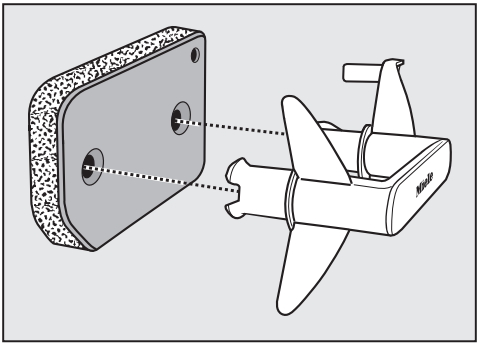

- Pull the handle out of the plinth filter.
- Clean the plinth filter carefully and thoroughly under running water.

⚠ To collect the cleaning water, place a bowl or bucket under the stopcock.

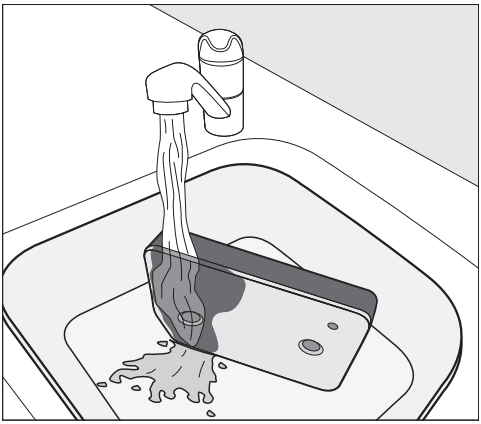

Tip: To speed up the removal of residue from the surface, run a water jet vertically over the front of the plinth filter.

- Squeeze the plinth filter very carefully several times as you rinse it.

Tip: Place the plinth filter flat in the bowl or bucket.

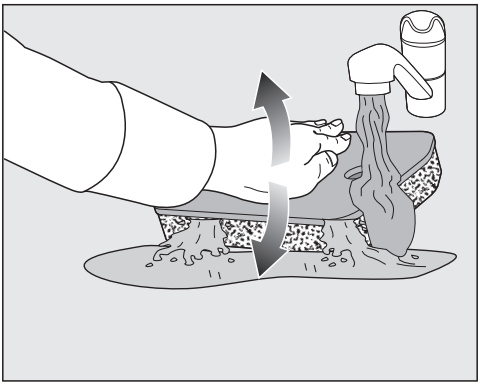

- To efficiently loosen underlying residue, gently press down on the plinth filter with the back of your hand.
- Rinse the entire plinth filter thoroughly until all visible residue has been removed.
- Carefully squeeze the plinth filter with the back of your hand until all of the water has been removed.

Tip: To soak up water, place the damp plinth filter between 2 hand towels. On an even surface, gently press down on the plinth filter with the back of your hand. This will dry the plinth filter more quickly.

The plinth filter must not be fitted dripping wet.
Otherwise, this could cause a fault.
Carefully squeeze the water out of the plinth filter.

If a drying programme is interrupted with a fault message after the clean plinth filter has been refitted, the plinth filter was too wet when it was refitted. Carefully squeeze the water out of the plinth filter again. Leave the plinth filter to air-dry.
If a fault occurs again despite this, it may be due to stubborn residue from washing substances. Reactivate the plinth filter in the washing machine. See “Problem solving guide – Reactivating the plinth filter”.

⚠ Blockages caused by a damaged or worn filter.
The heat exchanger becomes blocked and damage may occur.
Check the plinth filter following the instructions provided in “Problem solving guide – Replacing the plinth filter”. Replace the plinth filter if necessary.

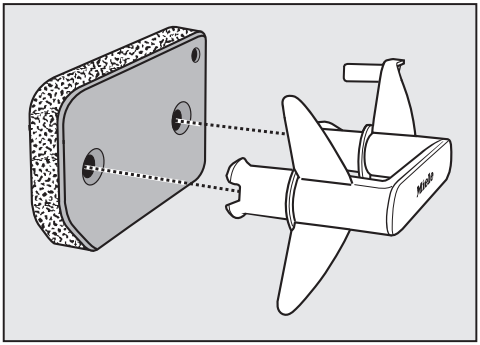

- Use a damp cloth to remove any fluff from the handle.
- Fit the plinth filter back on the handle. Make sure it is the correct way round.

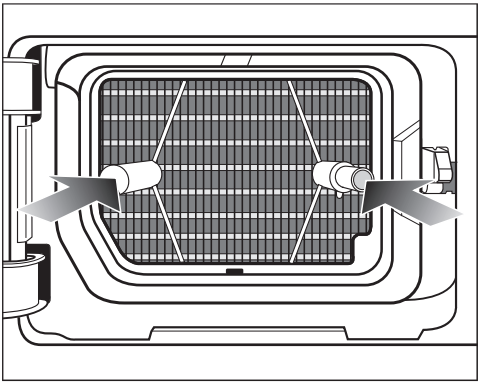

- Push the plinth filter in completely.

This will push in the right-hand guide pin at the same time.

Pouring out the cleaning water

- To catch any particles or fluff, pour the contents of the bowl or bucket through a filter (e.g. coffee filter).
- Dispose of the filter with your household waste.

Cleaning the plinth filter access panel

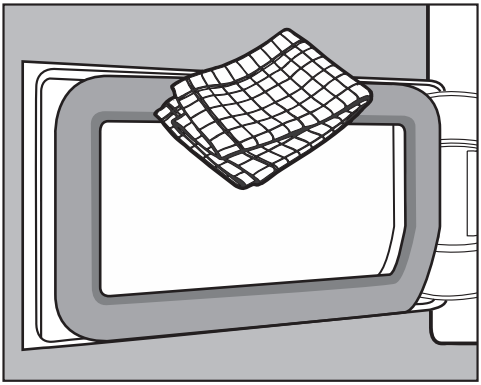

- Use a damp cloth to remove any fluff. Make sure that you do not damage the rubber seal when doing this.
- Close the heat exchanger access panel.

⚠ Damage or ineffective drying if drying takes place without a plinth filter or when the heat exchanger access panel is open.
An excessive accumulation of fluff can damage the tumble dryer. If the system is not leak-tight, this can make drying ineffective.
Only operate the tumble dryer with the plinth filter fitted and the heat exchanger access panel closed.

Cleaning the tumble dryer

Disconnect the tumble dryer from the electrical supply.

⚠ Damage due to the use of unsuitable care products.
Unsuitable care products could damage plastic surfaces and other parts.
Do not use any solvents, abrasive cleaners, glass cleaners or all-purpose cleaners.

Cleaning recommendation: clean once or twice a year and as required.

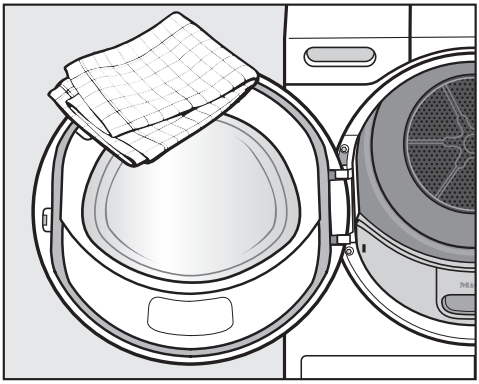

- Clean the tumble dryer and the seal on the inside of the door with a slightly damp soft cloth and a mild solution of washing-up liquid and soapy water.
- Dry all parts with a soft cloth.

Many malfunctions and faults that can occur in daily operation can be easily remedied. You can save time and money in many cases, as you do not need to call the Miele Customer Service Department.

Information to help you rectify faults yourself can be found at www.miele.com/service.

The following tables are designed to help you to find the cause of a malfunction or a fault and to resolve it.

Fault messages shown in the display when a programme is cancelled

Message	Cause and remedy
Empty the container or check the drain outlet	The condensed water container is full or there is a kink in the drain hose. ■ Open and close the door with the tumble dryer switched on to clear the message. Or switch the tumble dryer off and then on again. ■ Empty the condensed water container. ■ Check the drain hose.
Obstruction detected. Untangle laundry and restart.	The laundry is unevenly distributed or has rolled up. ■ Open the door and loosen the laundry. If necessary, take out some of the laundry. ■ Switch the tumble dryer off and then on again. ■ Start a programme.
Fault F. If restart fails, call Service.	There is no obvious cause. ■ Switch the tumble dryer off and then on again. ■ Start a programme. If the programme is cancelled again with the same fault message, then there is a fault. Contact the Miele Customer Service Department.

Message	Cause and remedy
Clean the fluff filter. Check the airways.	The system has been clogged by fluff or detergent residue. ■ To deactivate the message, confirm with OK. ■ Clean the fluff filters and the plinth filter. – Please see “Cleaning and care” for notes on cleaning. – If the fluff filters and the plinth filter are damaged or out of shape, or if they cannot be cleaned, they must be replaced. – If the fault message is displayed again after cleaning, this could be due to one of the causes listed below.
	The plinth filter was too wet when it was fitted. ■ Carefully squeeze the water out of the plinth filter. ■ Leave the plinth filter to air-dry.
	There is still underlying residue in the plinth filter that could not be removed. ■ Check the plinth filter. Follow the instructions in “Problem solving guide – Replacing the plinth filter”. ■ If the plinth filter is not damaged or out of shape, you can reactivate it in a washing machine. Follow the instructions in “Problem solving guide – Reactivating the plinth filter”.
	The heat exchanger is clogged. ■ Check the heat exchanger. Follow the instructions in “Problem solving guide – Checking the heat exchanger”.

Messages in the display

Message	Cause and remedy
000	Access via a code has been activated. ■ Enter the code and confirm the entry. Deactivate the code if you do not wish this message to appear in the display the next time the appliance is switched on.

Message	Cause and remedy
Finish/Cooling down	The laundry will be cooled down at the end of the programme. ■ Either remove the laundry and spread it out to cool down or leave it in the tumble dryer to cool down during the cooling phase.
ℹ Clean the fluff and plinth filters. See the operating instruction manual for more information.	The tumble dryer is not working correctly or economically. Possible causes could be clogging caused by fluff or detergent residue. ■ To deactivate the message, confirm with OK. ■ Please see “Cleaning and care” for notes on cleaning. ■ Clean the fluff filters. ■ Also check the plinth filter and clean it if necessary.
	You can influence when the Clean the fluff and plinth filters. See the operating instruction manual for more information. message lights up. ■ To do this, follow the instructions in “Airways indicator – Settings”.
ℹ Fill the condensate container with water	The condensed water container is empty. When certain programmes are being used, water is taken from the condensed water container and recycled. ■ To deactivate the message, confirm with *OK*. ■ Fill the condensed water container to at least the —min— mark.
ℹ Please open and close the door	This is to remind you to load the laundry when the Steam care programme is selected. ■ Load the laundry in the drum.

Unsatisfactory drying results

Problem	Cause and remedy
The *DryCare 40* Extra is not drying the laundry sufficiently.	The room where the tumble dryer is located is too warm. This has caused the DryCare process to finish prematurely. ■ Ventilate the room thoroughly. ■ To fully dry the laundry, select *Warm air* with the *DryCare 40* Extra.

Problem solving guide

Problem	Cause and remedy
The laundry is not sufficiently dry.	The load consisted of different types of fabric. ■ Finish drying using the *Warm air* programme. ■ Select a more suitable programme next time. Tip: You can alter the residual moisture level for some programmes. See “Settings”.
Laundry or feather filled pillows smell after drying	The laundry was washed with insufficient detergent Feathers are a natural product and this is quite normal. ■ Laundry: use sufficient detergent next time. ■ Pillows: take out of the tumble dryer and air them. ■ Use a fragrance flacon (available as an optional accessory) for your favourite fragrance.
Items made of synthetic fibres are charged with static electricity after drying	Synthetic fibres tend to attract static charge. ■ Static charge can be reduced by adding a fabric conditioner to the final rinse in the washing programme.
There is a build-up of fluff	Fluff is principally the result of friction when garments are being worn and to some extent when they are being washed. Machine drying hardly causes any fluff to form. Fluff is collected by the fluff filters and the plinth filter and can be removed easily. ■ See “Cleaning and care”.

The drying cycle duration is very long

Problem	Cause and remedy
The drying process goes on too long or even switches off.*	The room where the tumble dryer is located is too warm. ■ Ventilate the room thoroughly.
	Detergent residues, hair and fine fluff can clog the filters. ■ Clean the fluff filters and the plinth filter. ■ Remove visible fluff from the heat exchanger.
	The laundry is unevenly distributed or has rolled up. The drum is too full. ■ Disentangle the laundry and remove a few items. ■ Start a programme.
	The bottom right grille is blocked. ■ Move any objects, such as a laundry basket, away from the dryer.
	The laundry is too damp. ■ Spin using a higher spin speed in the washing machine.
	Metallic components, e.g. zips, have prevented the tumble dryer from registering the correct laundry moisture level. ■ Open any zips next time. ■ If the problem recurs, dry these items using the *Warm air* timed drying programme.

* Switch the tumble dryer off and on again before starting a new programme.

General problems with the tumble dryer

Problem	Cause and remedy
You can hear buzzing or humming operating noises.	The compressor (heat pump) is operating. Or you have selected a programme which sprays condensed water into the drum. ■ No action required. These noises are quite normal and can be heard when the compressor or the condensed water pump is operating.
	There is no fault.

Problem solving guide

Problem	Cause and remedy
A programme does not start	No obvious cause. ■ Connect the tumble dryer to the mains ■ Turn on the tumble dryer ■ Close the door ■ Check whether the mains fuse has tripped
	Has there been a power cut? When power is restored any previously running programme will restart automatically.
When the *DryFresh*, *PowerFresh* or *DryCare 40* extra options are selected, the drying level "jumps back" to a different one.	The drying level you selected previously cannot be combined with the extra option. The closest possible drying level is selected automatically.
The display is dark and the *Start/Stop* control is flashing slowly.	The display has switched off automatically to save energy (Standby mode). The drum will turn at intervals in the anti-crease phase. ■ Press any control. This switches Standby off.
The dryer is switched off at the end of the programme.	The tumble dryer switches off automatically. This is not a fault, but a normal function.
The display is in a different language.	A different language has been selected in "Settings, Language ⚑". ■ Set the language you want. The flag symbol serves as a guide.
The drum lighting does not come on.	To save energy, the drum lighting goes out automatically after a set time and after the programme starts. ■ Switch the dryer off and then on again. ■ To switch the drum lighting on, open the door of the tumble dryer.
	The drum lighting is faulty. The drum lighting is designed to last a long time and should not normally need to be replaced. ■ If you have tried everything but the drum lighting still does not come on, contact the Miele Customer Service Department.

Problem	Cause and remedy
The spray jet for spraying condensed water into the drum is insufficient.	When certain programmes are being used, water is taken from the condensed water container and sprayed into the drum. The spray jet can sometimes stop working.
	The fluff filter in the condensed water container is clogged. ■ Clean the fluff filter in the condensed water container. See “Cleaning the fluff filter in the condensed water container” in this section.
	There are heavy limescale deposits on the spray jet in the door opening. ■ Replace the spray jet. See “Replacing the condensed water spray jet” in this section. ■ Only use condensed water. Do not use mains water. The frequent use of mains water leads to limescale deposits.

Replacing the plinth filter

The heat exchanger can clog up.
Replace the plinth filter immediately if you see the following signs of wear before or after cleaning (optional accessory).

Poor fit

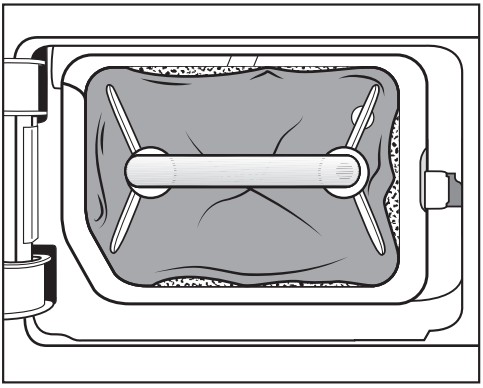

The edges of the plinth filter do not sit properly and the plinth filter is out of shape. Fluff will blow into the heat exchanger unfiltered through edges that do not sit properly. This will, in time, cause a blockage in the heat exchanger.

Deformations

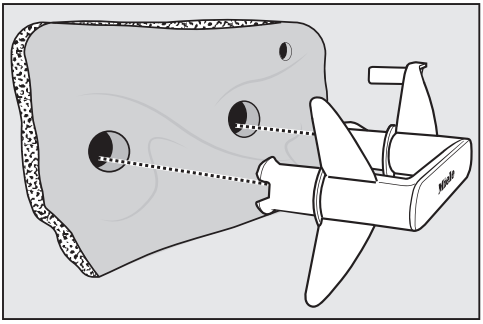

Deformations indicate that the filter has become blocked and worn by continuous use.

Cracks, tears, indentations

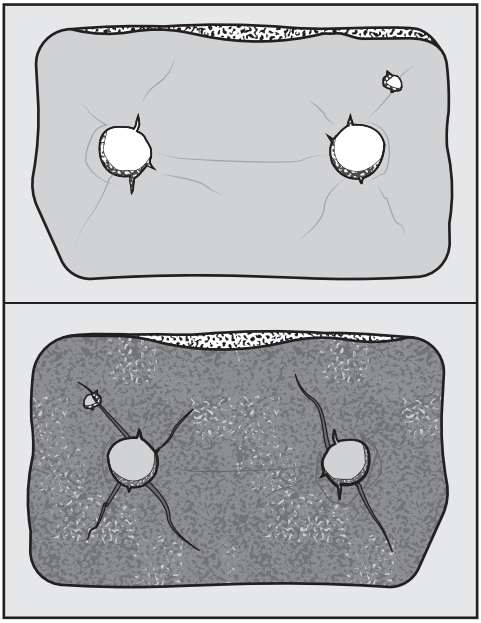

Fluff will blow into the heat exchanger through cracks and tears. This will, in time, cause a blockage in the heat exchanger.

White residues or residues of other colours

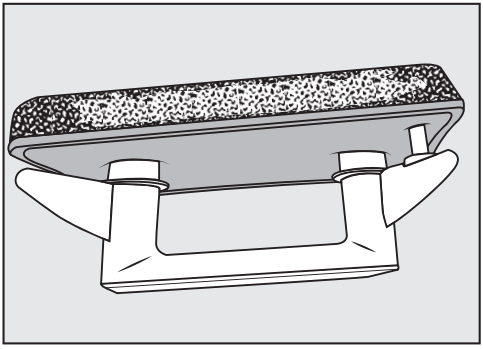

These residues arise from laundry fibres and traces of detergent components. They can be found on the front and side edges of the plinth filter. In extreme

cases, they can form stubborn crust. Residues are a sign that the plinth filter no is longer a snug fit at the sides, even if it appears to be perfect:
fluff is getting in unfiltered at the edges.

Reactivate the plinth filter. If these residues appear on the plinth filter again soon after cleaning, the plinth filter must be replaced.

Reactivating the plinth filter

You can reactivate one or more soiled plinth filters in a washing machine. You will then be able to use the plinth filter again.

Prior to reactivation, check that the plinth filter is in good order. Check the plinth filter following the instructions provided in “Problem solving guide – Replacing the plinth filter”. Replace the plinth filter if it has worn out.

- Wash the plinth filter(s) separately, not with any laundry items. Do not add any detergent.
- Select a short wash programme with a maximum temperature of 40 °C and a maximum spin speed of 600 rpm.

You can re-insert the plinth filter once the wash and spin cycles are complete.

Checking the heat exchanger

⚠ Risk of injury from sharp cooling fins.
You could cut yourself.
Do not touch the cooling fins with your hands.

- Look to see if fluff has accumulated.

Remove any fluff you can see.

⚠ Damage due to incorrect cleaning of the heat exchanger.
The tumble dryer will not dry if the cooling fins are damaged or bent.
Clean using a vacuum cleaner with a suction brush attached. Only pass the vacuum cleaner brush over the heat exchanger cooling fins lightly, without applying any pressure.

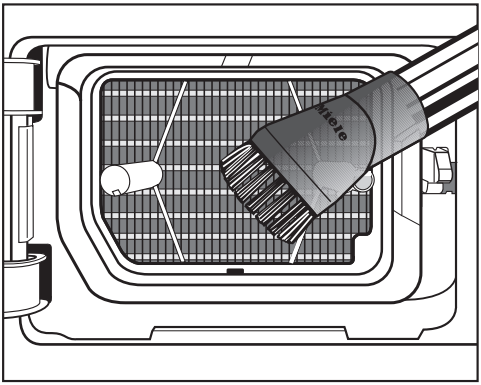

- Use a vacuum cleaner to remove fluff and residues.

Cleaning the fluff filter in the condensed water container

When certain programmes are being used, water is taken from the condensed water container and sprayed into the drum. The spray jet can sometimes stop working. The fluff filter in the condensed water container is clogged.

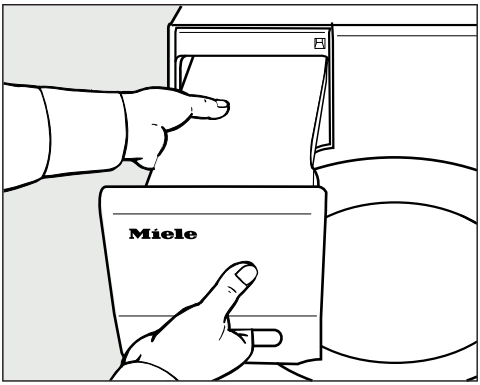

- Remove the condensed water container.

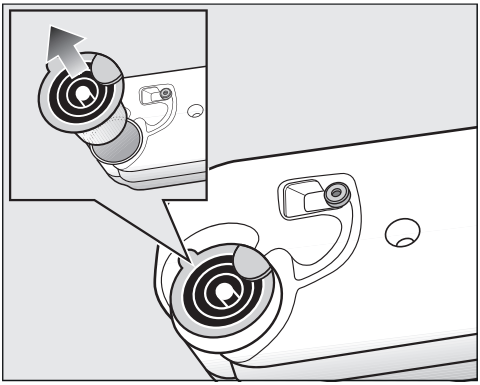

- Reach under the side lug on the spout with your finger.
- Pull out the spout.

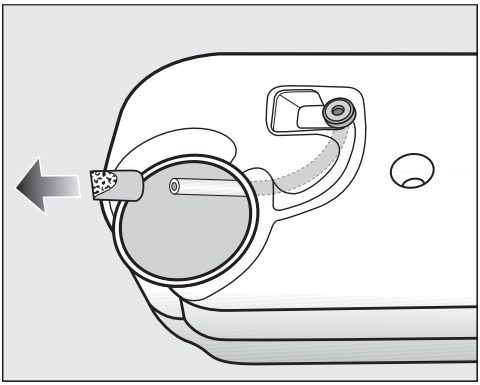

Be careful not to tug on the hose to avoid detaching it.

- Guide the end of the hose through the opening.
- Hold it securely with one hand.
- Use your other hand to pull the fluff filter off the hose.
- Rinse the fluff filter with a water jet until all the fluff has been removed.
- Attach the clean fluff filter to the end of the hose.
- Now feed the hose back into the condensed water container.
- Refit the spout in the condensed water container ensuring that it is positioned correctly. Please refer to the image.

Replacing the condensed water spray jet

When certain programmes are being used, water is taken from the condensed water container and sprayed into the drum. The spray jet can sometimes stop working. Limescale deposits have built up on the spray jet.

Remove the spray jet (optional accessory). Replace the spray jet.

You can only replace the spray jet using a special tool. The special tool is supplied with the new spray jet.

⚠ Using the wrong tool can cause damage.
Doing so can damage the spray jet or the tumble dryer.
Only use the tool supplied. Do not use any other tool.

- Open the tumble dryer door.

The spray jet is located in the top left of the door opening.

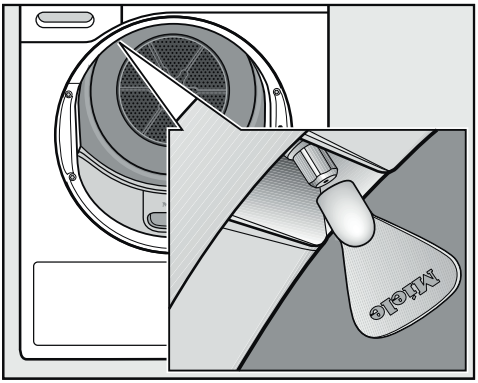

- Attach the tool to the spray jet.
- Turn the tool anti-clockwise to unscrew the spray jet.
- Insert the new spray jet into the tool.
- Turn the tool clockwise to screw the spray jet securely in position.

The tumble dryer must not be operated without the spray jet fitted.

Information to help you rectify faults yourself and about Miele spare parts can be found at www.miele.com/service.

Contact in the event of a fault

In the event of any faults which you cannot remedy yourself, please contact your Miele dealer or the Miele Customer Service Department.

You can book a Miele Customer Service Department call-out online at www.miele.com/service.

Contact information for the Miele Customer Service Department can be found at the end of this document.

Please quote the model identifier and serial number of your appliance (Fabr./SN/Nr.) when contacting the Miele Customer Service Department. This information can be found on the data plate.

Please note that telephone calls may be monitored and recorded for training purposes and that a call-out charge will be applied to service visits where the problem could have been resolved as described in this booklet.

The data plate is visible when the door is open.

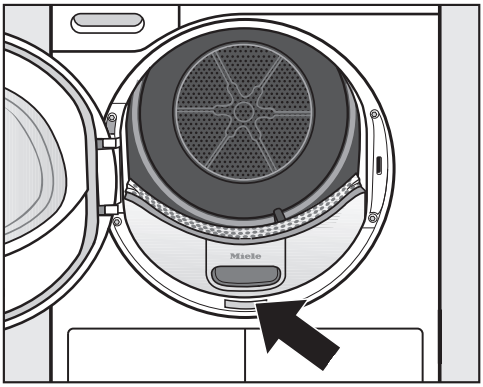

EPREL database

Information on energy labelling and eco-design requirements is available in the European Product Database (EPREL). You can find the product database at the following link https://eprel.ec.europa.eu/. You will be asked to enter the model identifier.

The model identifier can be found on the data plate.

Optional accessories

Optional accessories for this tumble dryer are available from Miele or from your Miele dealer.

You also can order these and many other useful products from the Miele online shop.

Dryer basket

The dryer basket is enables items which must not be subjected to mechanical action to be dried or aired.

Fragrance flacon

A fragrance flacon can be used in your tumble dryer to add a pleasant fragrance to your laundry.

Warranty

For information on the appliance warranty specific to your country please contact Miele. See back cover for address.

In the UK, your appliance warranty is valid for 2 years from the date of purchase. However, you must activate your cover by calling 0330 160 6640 or registering online at www.miele.co.uk.

Front view

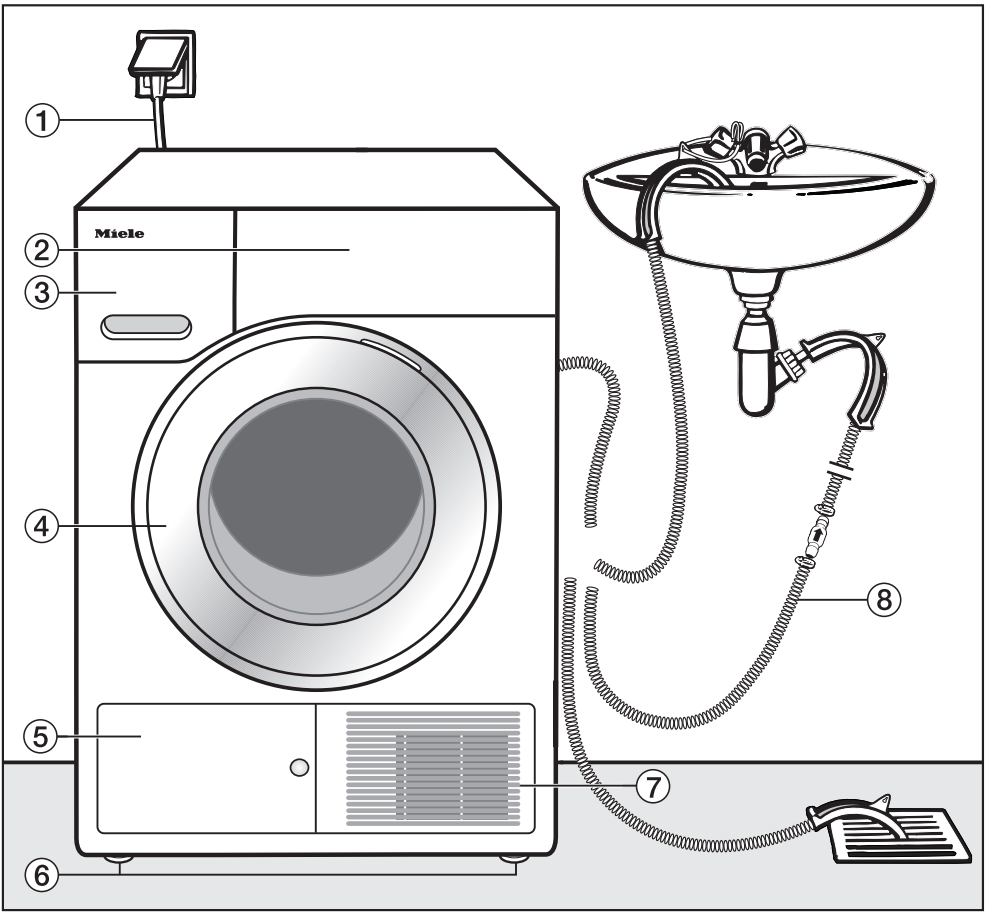

① Mains connection cable
② Control panel
③ Condensed water container
④ Door
⑤ Plinth filter flap
⑥ 4 height-adjustable feet
⑦ Cooling air grille
⑧ Drain hose for condensed water

Rear view

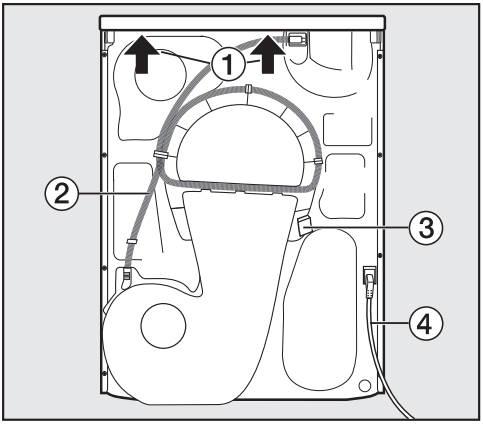

① Protruding lid for holding when moving the appliance

② Drain hose for condensed water

③ Hook for winding up the mains connection cable during transport

④ Mains connection cable

Transporting the tumble dryer

⚠ Danger of injury to people and damage to property caused by moving the appliance incorrectly.
If the tumble dryer tips up there is a danger of injury to people and damage to property.
Ensure that the tumble dryer is stable during transportation.

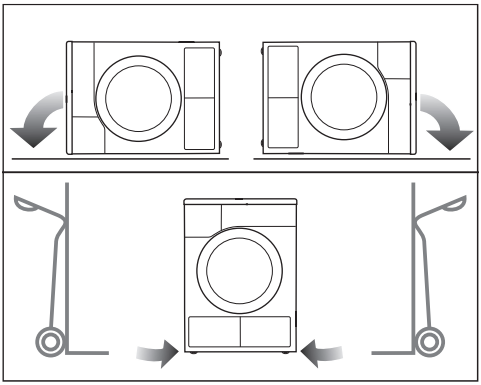

- If the tumble dryer is being transported on its side, it must be tipped onto its left or right side.
- If the tumble dryer is being transported upright and you are using a hand truck, you must transport it with its left or right side resting on the truck.

Transporting the tumble dryer to its installation site

⚠ Make sure the fixings at the back of the lid are secure.
Otherwise there is a danger of the lid being pulled off when carrying the appliance.
Before carrying the appliance check that the lid is secure where it protrudes at the back of the appliance.

- Carry the tumble dryer by the front feet and by the lid where it protrudes at the back of the appliance.

Installation

Levelling the tumble dryer

No lockable door, sliding door or door hinged in the opposite direction must be installed within the swing range of the dryer door.

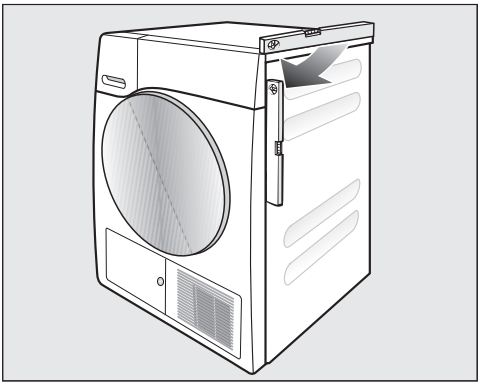

The tumble dryer must stand perfectly level to ensure safe and proper operation.

The feet on the tumble dryer can be adjusted to compensate for unevenness in the floor.

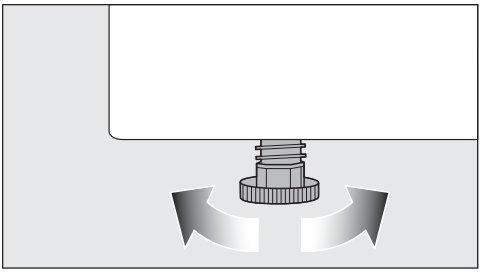

- Adjust the tumble dryer feet until the appliance is level.

Tip: Use a flat 17 mm open spanner to make it easier to turn the adjustable feet. Many Miele washing machines are supplied with a suitable open spanner.

Downtime after installation

⚠ Damage to the tumble dryer by switching it on too soon.
This can damage the heat pump.
After setting up the tumble dryer wait for at least one hour before switching it on.

Ventilation

The cool air intake at the front of the tumble dryer must not be blocked or covered. This would hinder a sufficient intake of cool air for the heat exchanger.

Do not block the gap between the bottom of the tumble dryer and the floor with plinth facings, deep pile carpet etc. This would hinder a sufficient flow of air to the tumble dryer.

The hot air that is blown out from the heat exchanger warms the room air. Ensure sufficient ventilation of the room: e.g., open the window. The drying time will otherwise take longer (higher energy requirement).

Before moving the tumble dryer again (e.g. when moving house)

After each use a small quantity of condensed water will collect in the area of the pump. This water can run out if the tumble dryer is tipped up when it is being moved. Recommendation: run the *Warm air* programme for approximately 1 minute before moving the tumble dryer. Any remaining condensed water will then be fed into the condensed water container or out through the drain hose.

Additional installation requirements

Slot-in

This tumble dryer is suitable for pushing under a worktop.

Appliance defect due to a build-up of heat.
Make sure there is adequate room for warm air from the dryer to be directed away.

- The appliance lid cannot be removed.
- The electrical socket must be located in an accessible position near the tumble dryer.
- Drying durations may increase slightly.

Optional accessories

– Washer-dryer stack

The tumble dryer can be combined with a Miele washing machine in a washer-dryer stack. The appropriate Miele washer-dryer stacking kit is required.

– Plinth

The tumble dryer can be fitted on a plinth with drawer (please note the plinth may not be available in all countries).

External condensed water outlet

Note

When drying is in progress, condensed water is pumped into the condensed water container through the drain hose which is located at the back of the dryer.

The condensed water can also be externally drained away via the drain hose at the back of the dryer. This means that the condensed water container no longer has to be emptied.

Drain hose length: 1.49 m
Max. delivery head: 1.00 m
Max. drain hose length: 4.00 m

Drainage accessories

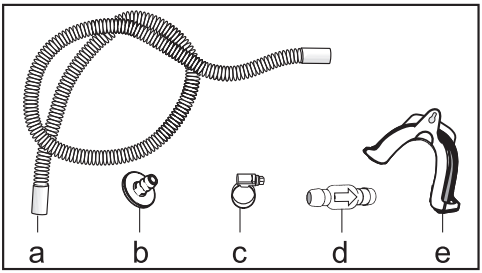

- Supplied: Adapter (b), Hose clip (c), Hose holder (e);
- Available to purchase: “Non-return valve” kit for connection to an external water connection. Non-return valve (d), Hose extension (a) and Hose clips (c) are supplied.

Installation conditions requiring a non-return valve

⚠ Danger of condensed water back-flow.
Water could flow back into the tumble dryer or be drawn into it. Back-flow water could damage the tumble dryer and also the room in which it is located.
The non-return valve should be used if the end of the hose is immersed in water, or if other water connections are installed.

Maximum delivery head with non-return valve fitted: 1.00 m

Installation conditions requiring the fitting of a non-return valve:

- Drainage into a sink or floor gully where the end of the hose is immersed in water.
- Connection to a sink drain outlet.
- Connection to a drainage system already in use by another appliance, e.g. a dishwasher or washing machine.

If the non-return valve is incorrectly fitted the appliance will not drain.
The non-return valve has to be fitted with the arrow on it pointing in the direction of flow.

Arranging the drain hose

⚠ Damage to the drain hose through incorrect handling.
The drain hose can suffer damage and leak.
Do not pull on the drain hose and do not stretch it or allow it to become kinked.

There will be a small amount of residual water left in the drain hose. Have a container ready to collect this.

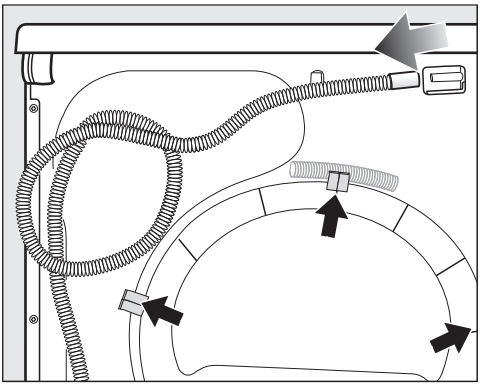

- Pull the drain hose off its connection (light arrow).
- Pull the hose out of the holders (dark arrow) and unwind it.
- Allow any residual water to run into a container.

Examples

Drainage into a sink or floor gully

Use the hose holder to secure the drain hose.

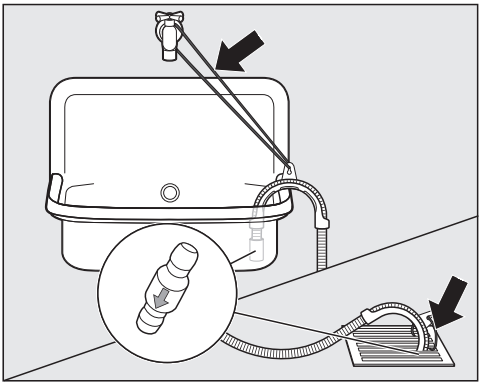

⚠ Water damage.
Should the end of the hose come loose, overflowing water can cause damage.
Secure the drain hose carefully (e.g., by tying it) to make sure it cannot slip.

The non-return valve can be fitted in the end of the hose.

Direct connection to a sink drain outlet

Use the hose holder, the adapter, the hose clips and the non-return valve (available to purchase).

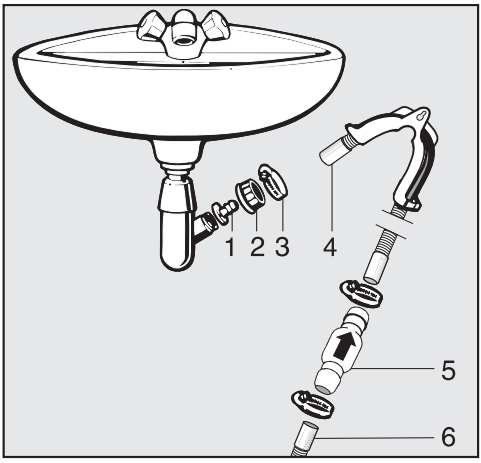

1. Adapter
2. Nut
3. Hose clip
4. End of the hose (secured with the hose holder)
5. Non-return valve
6. Tumble dryer drain hose

- Fit adapter **1** to the sink drain outlet using nut **2**.
  The nut is usually fitted with a washer which must be removed.
- Attach the end of the hose **4** to adapter **1**.
- Use the hose holder.
- Use a screwdriver to tighten hose clip **3** up close to the nut.
- Fit non-return valve **5** to tumble dryer drain hose **6**.

Non-return valve **5** has to be fitted so that the arrow points in the direction of flow (i.e. towards the sink).

- Secure the non-return valve using hose clips.

Changing the door hinging

You can change the door hinging on this tumble dryer yourself.

For safety reasons the tumble dryer must be disconnected from the electricity supply before changing the door hinging.

You will need:

- a Torx T20 and T30 screwdriver
- a flat head screwdriver or pointed pliers
- the lock catch cover supplied
- the door hinge cover supplied
- a soft surface (e.g. a tablecloth)

Changing the hinging over

1. Remove the door from the dryer

■ Open the door.

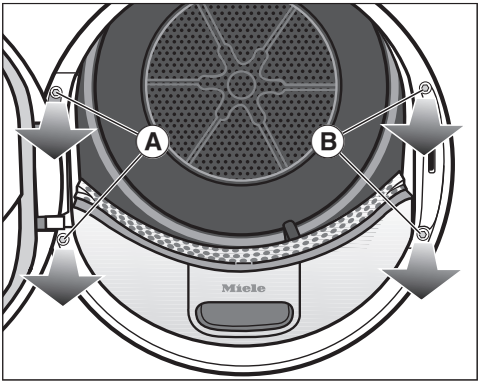

■ Use a T30 Torx screwdriver to unscrew the two screws on the base plate of the door hinge Ⓐ.

The door cannot fall off as it is held in place by 2 pins.

■ Hold the door securely and pull it forwards: to remove the door you will need to pull the base plate of the hinge with its 2 pins out of the dryer.

To avoid scratching the door, place it outer side downwards on a soft surface (e.g. a tablecloth).

2. Change over the door lock on the dryer

■ Use a Torx T30 screwdriver to unscrew the two screws on the door lock Ⓑ.

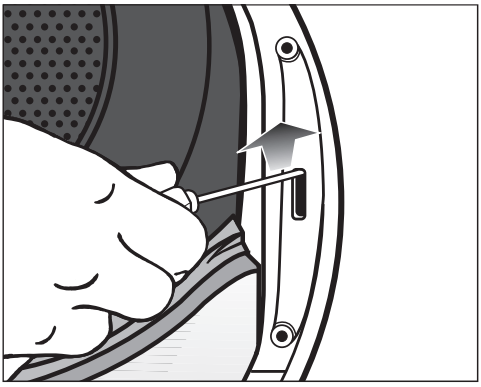

■ Use the screwdriver to press the door lock upwards.

The door lock will spring out of its position and can then be removed.

- Turn the door lock through 180°.

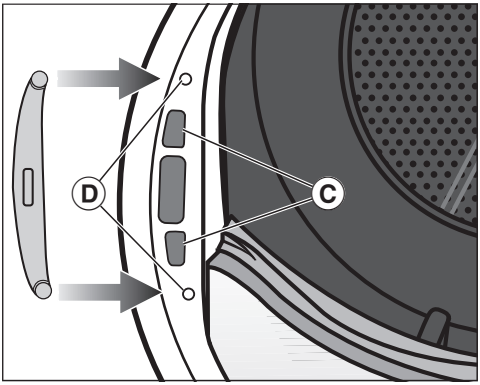

- Press the door lock into openings Ⓒ on the opposite side of the door opening.
- Adjust the position of the door lock so that the screw holes line up with those in the front panel of the dryer Ⓓ.
- Secure the door lock with the two Torx screws.

3. Remove the lock catch from the door

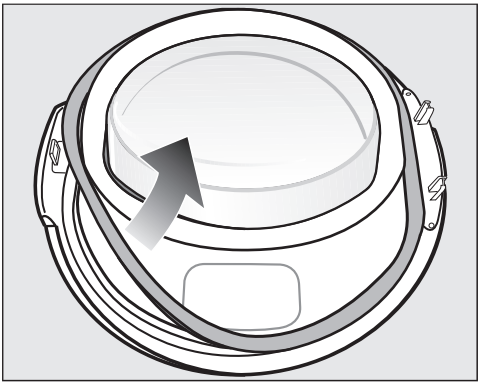

- First take the rubber seal off the door and place this to one side.

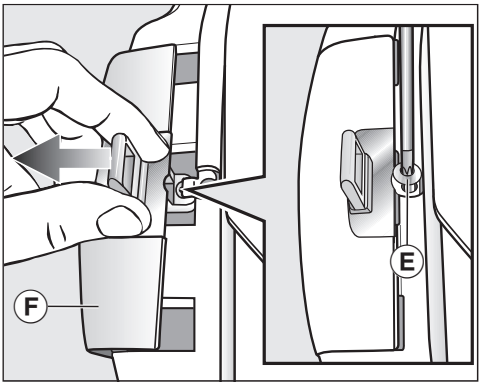

- Use a T20 Torx screwdriver to remove screw Ⓔ on the lock catch.
- Pull off the lock catch together with lock catch cover Ⓕ.

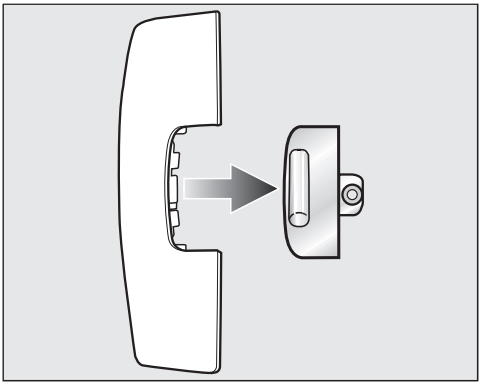

- Remove the lock catch from the cover.

This lock catch cover is no longer needed, however, please keep it in a safe place.

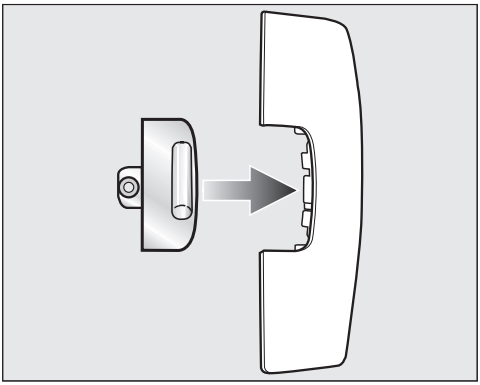

- Insert the lock catch into the new cover supplied with the dryer.
- Place this new cover to one side for now.

4. Dismantle the door hinge from the door

The door hinge cover must be unclipped from position Ⓖ and then removed.

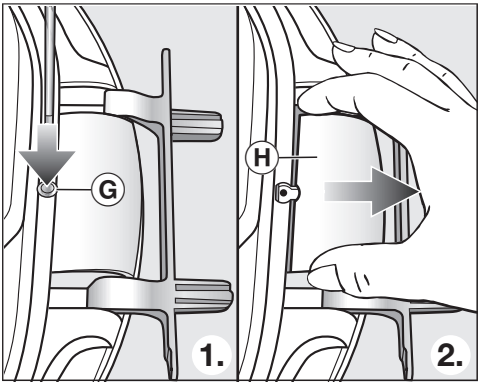

- Use a screwdriver to press down gently on position Ⓖ on the door hinge cover.
- Using a little force, pull out door hinge cover Ⓗ.

This door hinge cover is no longer needed, however, please keep it in a safe place.

5. Change over the door hinge on the door

The door hinge is secured to the door with 2 angled rods. These rods need to be removed with a screwdriver or pointed pliers.

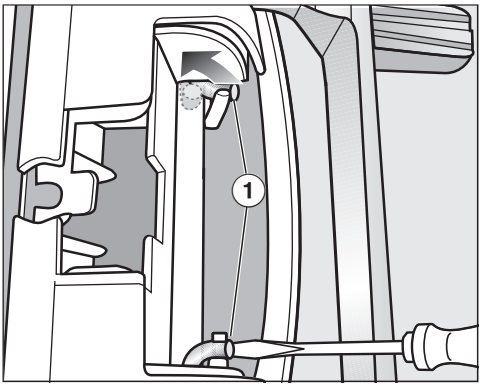

- Insert the end of the screwdriver blade under rod ① and rotate it so it is in an upright position. Do the same to the other rod.

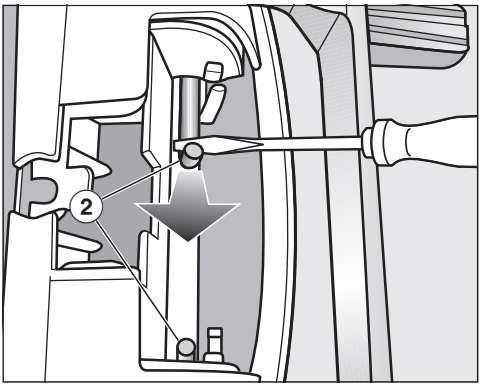

- Use the screwdriver or pointed pliers to guide first one then the other rod ② to the middle until each can be removed.

Tip: In some circumstances, the rods can be difficult to dislodge. Moving the screwdriver with a levering action while pulling at the same time may help to work the rods free.

- Remove the door hinge and turn it through 180°.
- Fit the door hinge on the opposite side of the door.

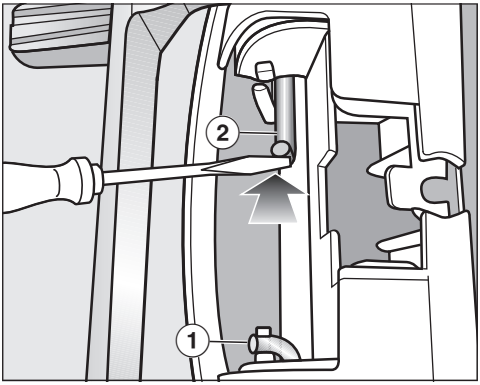

- Secure the door hinge with the two rods ②.
- Position the tip of the screwdriver under the end of the rod and then push it into its resting position ①.

You now need the new door hinge cover supplied with the tumble dryer.

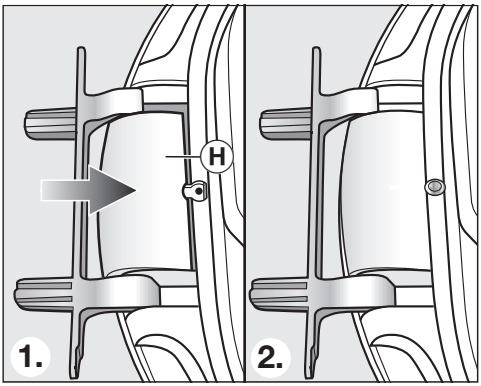

- Fit new door hinge cover Ⓗ and clip it into position.

6. Change the lock catch on the door

⚠ You now need the new lock catch cover supplied with the dryer which you have already fitted with the lock catch.

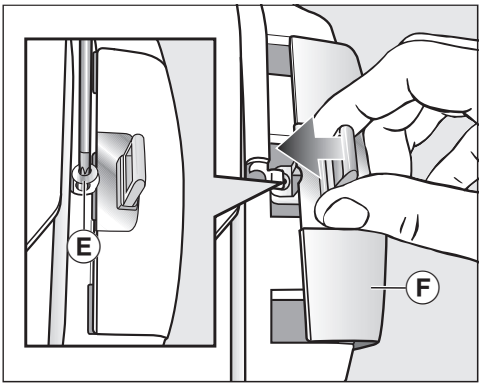

- Push lock catch cover Ⓕ with its lock catch into position.
- Tighten screw Ⓔ.

Refitting

7. Refit the door

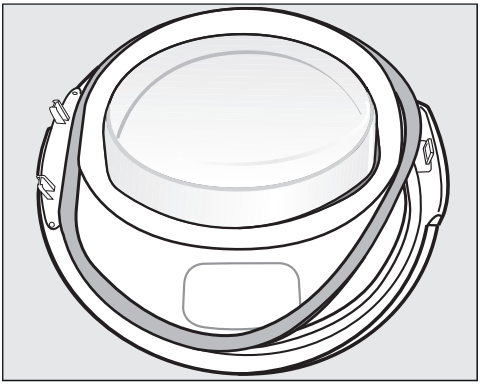

- Press the rubber seal back into the grove on the door.
- Position the door in front of the dryer.
- Fit the base of the door hinge with its 2 pins into the openings on the dryer.

The base of the door hinge must be flush with the front panel of the dryer. The door cannot fall off in this position.

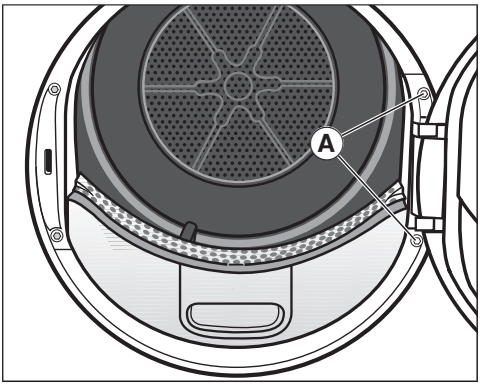

- Screw the door securely to the dryer at the base of door hinge Ⓐ.

⚠ Now that you have changed the door hinging the door will open from the opposite side.

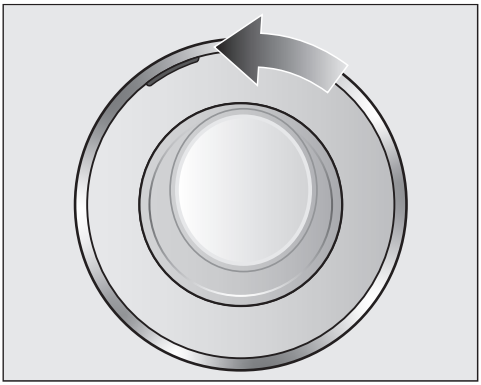

- Push the orange marker round to the other side so that you will see at which side to pull the door open.

Important

⚠ Please keep the lock catch and door hinge covers which were no longer needed in a safe place. These will be required if, for example, you move house and need to change the door hinging back to its original position.

Electrical connection

The tumble dryer is supplied with a mains cable with moulded plug ready for connection to a suitable earthed socket.

The socket must be easily accessible after the tumble dryer has been installed. If the socket is not easily accessible, ensure that a suitable means of disconnection is provided on the installation side for each pole.

⚠ Risk of fire from overheating.

Connecting the tumble dryer to a multi-socket adapter or to an extension lead can overload the mains connection cable.

For safety reasons, do not use an extension cable or multi-socket adapter.

The electrical system must comply with local and national safety regulations (BS 7671 in the UK).

For safety reasons, we recommend using a type A residual current device (RCD) in the relevant electrical installation for connecting the tumble dryer.

If the mains connection cable is damaged, it must only be replaced with a specific mains connection cable of the same type (available from the Miele Customer Service Department). For safety reasons, such replacement may only be carried out by a qualified specialist or the Miele Customer Service Department.

These operating instructions and the data plate indicate the nominal power consumption and the appropriate fuse rating. Compare this information with the data of the on-site electrical connection.
If in any doubt, consult a qualified electrician.

Temporary or permanent operation on an autonomous power supply system or a power supply system that is not synchronised with the mains power supply (e.g. island networks, back-up systems) is possible. A prerequisite for operation is that the power supply system complies with the specifications of EN 50160 or an equivalent standard. The function and operation of the protective measures provided in the domestic electrical installation and in this Miele product must also be maintained in isolated operation or in operation that is not synchronised with the mains power supply, or these measures must be replaced by equivalent measures in the installation. As described, for example, in the current version of BS OHSAS 18001–2 ISO 45001.

Height	850 mm
Width	596 mm
Depth	643 mm
Depth with door open	1077 mm
Suitable for pushing under a worktop	Yes
Suitable for stacking	Yes
Weight	approx. 52 kg
Drum volume	120 litres
Load size	9.0 kg (weight of dry laundry)
Capacity of condensed water container	4.8 l
Hose length	1.49 m
Maximum delivery head	1.00 m
Maximum drain hose length	4.00 m
Length of connection cable	2.00 m
Voltage	See data plate
Connected load	See data plate
Fuse rating	See data plate
Test certificates awarded	See data plate
Energy consumption	See “Consumption data”
LEDs	Class 1
Frequency band	2.4000 GHz – 2.4835 GHz
Maximum transmission power	< 100 mW

EU Conformity declaration

Miele hereby declares that this heat-pump tumble dryer complies with Directive 2014/53/EU.

The complete text of the EU declaration of conformity is available from one of the following internet addresses:

- Products, Download from www.miele.ie
- For service, information, operating instructions etc: go to https://miele.ie.manuals and enter the name of the product or the serial number

UK Conformity declaration

Miele hereby declares that this heat-pump tumble dryer complies with UK Radio Equipment Regulations 2017, as amended.

The complete text of the UK declaration of conformity is available from one of the following internet addresses:

- Products, Download from www.miele.co.uk
- For service, information, operating instructions etc: go to https://miele.co.uk/manuals and enter the name of the product or the serial number

This **Statement of Compliance** confirms this Miele product fully complies with the **Product Security and Telecommunications Infrastructure (Security Requirements for Relevant Connectable Products) Regulations 2023.**

1) Household Appliance – *Tumble Dryer HT28-W, HT30-W*
2) Manufactured by: Miele & Cie KG,
   Carl Miele Street 29, 33332 Gutersloh Germany
   Imported by and contact point: Miele Company Ltd, Fairacres, Marcham Road, Abingdon, Oxon, OX14 ITW Great Britain
3) The defined support period at the time of first supply is 10 years
4) To report vulnerabilities and cybersecurity issues please contact: psirt@miele.com
5) Signature
   Name: **Paul Wright**
   Company Position: **Head of Technical Management**
   Date of signature: **19th March 2024**
   Place of signature: **Abingdon, Oxfordshire**

Programmes	Load size[2] kg	Running time h:min	Energy kWh	Final moisture content after drying %
ECO[1]	9,0	3:40	1,47	0
	4,5	2:11	0,78	0
Cottons	9,0	4:00	1,60	- 4
Extra dry	4,5	2:20	0,83	- 4
Cottons	9,0	2:56	1,16	12
Hand iron	4,5	1:43	0,69	12
Minimum iron Cupboard Dry plus	4,0	1:07	0,52	0
Minimum iron Cupboard Dry	4,0	1:05	0,50	2
Minimum iron Hand iron	4,0	0:57	0,40	8
Delicates Cupboard Dry	2,5	1:10	0,55	0

[1] ECO is the test programme in accordance with Regulations (EU) 2023/2533 and (EU) 2023/2534 for the energy label measured in accordance with EN 61121. The sound power level at full load for the ECO test programme is 60 dB(A) re 1 pW.

[2] The load refers to the weight of the dry laundry.

The values quoted for other programmes without the ECO programme are guide values calculated using EN 61121.

Consumption data can vary from the nominal values given above depending on load size, types of textiles, residual moisture levels after spinning, additional programme parameters selected and fluctuations in the electricity supply, or when water hardness levels differ from specified values.

You can alter the tumble dryer's electronics to suit changing requirements with the settings.
The settings can be altered at any time.

Accessing the Settings menu

- Switch the tumble dryer on.
- Scroll to the second page in the main menu.
- Touch the Settings sensor.

Selecting settings

The settings are grouped into different areas.

- Select the required area.
- Scroll through the list until the setting you want appears.
- Touch the sensor to select the setting you require.

Changing a setting

- Change the value displayed and confirm with OK.

or

- Touch an option to select it.

An option which is selected will be highlighted orange.

The option is saved. The display will then switch to the Settings menu, or go back to the previous menu level.

Closing the Settings menu

- Touch the ⮌ sensor.

The display will then go back to the previous menu level.

- Touch the ⌂ sensor.

The display will change to show the main menu.

Operation/display ⚑

Language ⚑

The display can be set to appear in one of several different languages.

The flag ⚑ after the word Language (Sprache in German) acts as a guide in case a language which is not understood has been set.

The language selected is saved.

Code

The code prevents your dryer being used without your knowledge.

Options

- Activate
  If the PIN code has been activated, you have to enter the PIN code after switching the dryer on. Otherwise the dryer cannot be operated.
  The factory default PIN code is 250.
- Change
  You can enter a PIN code of your own.

If you forget the PIN code, only Miele Service can unlock the tumble dryer.
Make a note of your new PIN code.

- Deactivate
  For using the dryer without entering the code. This only appears if the code had been activated previously.

Clock display

After selecting the clock format you can set the time of day.

Options

- Clock format
  The clock format is set.
  - 24 h (factory default)
  - 12 h
- Set
  The current time is set.

Consumption

You can display the total consumption.

Options

- Previous programme
  Energy consumption in the last programme run
- Total consumption
  Previous total consumption
- Set the cost
  Cost, price per kWh

Memory

The dryer saves the settings that were selected last for a drying programme (drying stage and/or extra option, or the duration for some programmes).

When the programme is chosen again, the saved settings will appear in the display.

Options

- Off (factory default)
- On

Volume

The volume can be changed for the buzzer that sounds when the dryer is switched on and at the end of the programme. The volume of the tone that sounds when a sensor is touched can also be changed.

Options

- Finish tone
- Keypad tone
- Welcome tone

It can be set to one of 7 different settings or switched off altogether.

Behaviour finish tone

A buzzer sounds to let you know that it is the end of the programme. You can decide how long the buzzer should sound for.

Options

- Only 3 times after finish
  The buzzer sounds 3 times at the end of the programme.
- Up to 1 h after finish
  The buzzer sounds at the end of the programme until the tumble dryer switches off automatically (for a maximum of 1 hour).

Display brightness

The brightness of the display can be altered.

It can be set to one of 7 different settings.

Factory default: a medium setting

Wash2Dry

You can deactivate the *Wash2Dry* function.

Options

- On (factory default)

  Wash2Dry is enabled and lights up in the main menu.
- Off

  Wash2Dry does not light up.

“Display” off status

To save energy the display and sensor controls will go out after 10 minutes and the *Start/Stop* button will flash slowly. You can change this setting.

Options

- On
  The display will go out (after 10 minutes):
  - if a programme is not selected after the dryer has been switched on
  - while the programme is running
  - after the end of a programme
- On. Not in current prog.
  (Factory default)
  The display will go out (as described above) but will remain on while the programme is running.

You can switch the display back on by touching any sensor.

Networking

Miele@home

Control the networking of your tumble dryer with your home WiFi network.

The following points may appear in the submenu:

Set up

This message only appears if the tumble dryer has not yet been connected to a WiFi network.

Please refer to “Before using for the first time” for instructions on how to set up the connection.

Activate

(visible if Miele@home is deactivated)

The WiFi function is reactivated.

Deactivate

(visible if Miele@home is activated)

Miele@home remains set up, the WiFi function is switched off.

Connection status

(visible if Miele@home is activated)

The following values are displayed:

- The quality of WiFi reception
- The network name
- The IP address

Set up again

(visible if set up)

Resets the WiFi login (network) to immediately re-establish a new connection.

Reset

(visible if set up)

- The WiFi is switched off.
- The WiFi connection will be reset to the factory default setting.

The network configuration should be reset whenever a tumble dryer is being disposed of or sold, or if a used tumble dryer is being put into operation. This is the only way to ensure that all personal data has been removed and the previous owner will no longer be able to access the tumble dryer.

A new connection setup has to be carried out in order to use the Miele@home setting again.

SmartGrid

The SmartGrid setting is only visible if the Miele@home setting is set up and activated.

You can use this function to set your tumble dryer to start automatically based on an external signal within a certain time period.

Activating SmartGrid gives the *Timer* sensor a new function. Use the *Timer* button to set SmartStart. The tumble dryer will then start within the time period specified by you when it receives an external signal.
If a signal has not been received by the latest start time set, the tumble dryer will start automatically (see “Timer”).

SmartGrid is deactivated as standard.

Remote control

The Remote control setting is only visible if the Miele@home setting is set up and activated.

Once the Miele app has been installed on your mobile device, you can check the status of your tumble dryer from anywhere and start it remotely. You can also control it remotely via the *MobileStart* programme.

You can switch off the Remote control setting if you do not want to operate the tumble dryer with your mobile device.

If Remote control is not switched on, the app can still be used to cancel the programme.

Use the *Timer* sensor control to set a timeframe within which you want to start the tumble dryer and start the timer (see “Timer/SmartStart”).
The tumble dryer will then start within the timeframe specified when it receives your signal.
If it has not received a start signal by the latest start time set, the tumble dryer will start automatically.

Remote control is activated as standard.

RemoteUpdate

The RemoteUpdate function is used for updating the software in your tumble dryer.

RemoteUpdate is activated by default.

If you do not install a RemoteUpdate, you can continue to use your tumble dryer in the usual way. However, Miele recommends installing RemoteUpdates.

Activation

The RemoteUpdate menu option is only displayed and can only be selected if you have added your tumble dryer to your WiFi network (see “Miele@home” in the “Settings” chapter).

Miele’s RemoteUpdate function can only be used if the tumble dryer is connected to a WiFi network and you have an account in the Miele@mobile app. The tumble dryer must be registered in it.

See the Miele@mobile app for terms and conditions of use.

Some software updates can only be carried out by Miele Service.

Running a RemoteUpdate

If a RemoteUpdate is available for your tumble dryer, it will be displayed automatically for you.

You can choose to start the RemoteUpdate immediately or wait until later. If you select “Start later”, the prompt to run the RemoteUpdate will be displayed again the next time you switch on your tumble dryer.

The RemoteUpdate can take a few minutes.

Please note the following information about the RemoteUpdate function:

- You will only receive a message when a RemoteUpdate is available.
- Once a RemoteUpdate has been installed, it cannot be undone.
- Do not switch off the tumble dryer during a RemoteUpdate. Otherwise, the RemoteUpdate will be aborted and will not be installed.

Programme sequence

Anti-crease

The Anti-crease function reduces creasing after the end of the programme.

The drum will continue to rotate for up to 2 hours after the drying cycle has finished. This helps to reduce creasing.

Options

- Off
- 1 h
- 2 h (factory default)

Cooling down temp.

The laundry will be cooled down automatically before the end of the programme. The automatic cooling-down phase which takes place before the end of a programme can be set at a cooler level for all the drying level programmes. This means that the cooling phase is extended.

Selection

The value is set in increments of 1 °C.

- 55 °C (factory default setting)
- ...
- 40 °C

Drying levels

You can alter the drying levels for the *Cottons*, *Minimum iron* and *Automatic* programmes.

It can be set to one of 7 different settings.

Factory default: a medium setting

Machine parameters

Airways indicator

Fluff should be removed after drying. In addition, this indicator will remind you to clean the filters when a certain amount of fluff has collected in them:
ℹ Clean the fluff and plinth filters. See the operating instruction manual for more information.
You can decide at what level of fluff this reminder should be given.

Options

You will have an idea of which option you should pick after a few drying programmes.

- Off
  This reminder does not appear. However, if there is a very severe blockage in the ducting, the programme will be cancelled and the fault message
  Clean the fluff filter. Check the airways.
  will appear in the display regardless of this option.
- Heavy
  The reminder only appears when there is a heavy build-up of fluff.
- Normal (factory default)
- Light
  The reminder appears when there is only a small build-up of fluff.

Conductivity

This setting is only relevant for regions with very soft water.

Very soft water can result in unsatisfactory drying results.
You should only select this setting if the water used for washing the laundry is extremely soft with a conductivity reading (electrical conductivity) less than 150 µS/cm. Contact your local water authority for the conductivity level of your mains water supply.

Options

- Normal (factory default)
- Low <150mS (only for regions with very soft water)

Operating hours

You can read off how many hours your tumble dryer has been in operation for.

The time is displayed as the total running time in hours.

Factory default

All settings except *Operating hours* are reset to the factory default settings.

Options

ℹ Reset to factory settings?

- Yes
  The settings are reset to the factory default settings.
- No
  The settings are not reset to the factory default settings.

Legal information

Open source licences

You can view information here.

Copyrights and licences for operator and control software

Miele uses their own and third party software which is not subject to any so-called Open Source Licence for the operation and control of the appliance. This software/these software components are protected by copyright. The copyright powers of Miele and third parties have to be respected.

Furthermore, this appliance contains software components which are distributed under Open Source licence conditions. Please refer to the menu item Settings | Appliance parameters | Legal information | Open source licences in the appliance for the Open Source components contained therein, together with the corresponding copyright notices, copies of the licencing conditions valid at the time, and any further information. The liability and warranty provisions of the Open Source licence terms and conditions as stated therein apply only in relation to the respective rights holders.

Copyrights and licences for the communication module

For the purpose of operating and controlling the communication module, Miele uses proprietary or third-party software that is not covered by open source licensing terms. These items of software/software components are protected by copyright. The copyrights held by Miele and third parties must be respected.

Furthermore, this communication module contains software components which are distributed under open source licence conditions. The open source components contained in the appliance along with the corresponding copyright notices, copies of the licensing terms valid at the time, and any further information can be accessed locally via IP using a web browser *(http://<IP address>/Licenses)*. The liability and warranty arrangements for the open source licences displayed in this location only apply in relation to the respective rights holders.

United Kingdom
Miele Co. Ltd., Fairacres, Marcham Road, Abingdon, Oxon, OX14 1TW
Tel: 0330 160 6600, Internet: www.miele.co.uk, E-mail: info@miele.co.uk

Australia
Miele Australia Pty. Ltd.
ACN 005 635 398
ABN 96 005 635 398
Level 4, 141 Camberwell Road
Hawthorn East, VIC 3123
Tel: 1300 464 353
E-mail: info@miele.com.au
Internet: www.miele.com.au

China Mainland
Miele Electrical Appliances Co. Ltd.
No. 82, Shimenyi Road, JingAn District
Shanghai, China, P.R.C
Post Code: 200040
Phone: +86 21 6157 3500
Fax: +86 21 6157 3511
E-mail: info@miele.cn
Internet: www.miele.cn

Hong Kong, China
Miele (Hong Kong) Ltd.
41/F - 4101, Manhattan Place
23 Wang Tai Road
Kowloon Bay, Hong Kong
Tel: (852) 2610 1025
Fax: (852) 3579 1404
E-mail:
customerservices@miele.com.hk
Website: www.miele.hk

India
Miele India Pvt. Ltd.
1st Floor, Copia Corporate Suites,
Commercial Plot 9, Mathura Road,
Jasola, New Delhi - 110025
E-mail: customercare@miele.in
Website: www.miele.in

Ireland
Miele Ireland Ltd.
2024 Bianconi Avenue
Citywest Business Campus
Dublin 24
Tel: (01) 461 07 10
Fax: (01) 461 07 97
E-mail: info@miele.ie
Internet: www.miele.ie

Malaysia
Miele Sdn Bhd
Suite 12-2, Level 12
Menara Sapura Kencana
Petroleum
Solaris Dutamas No. 1
Jalan Dutamas 1
50480 Kuala Lumpur, Malaysia
Phone: +603-6209-0288
Fax: +603-6205-3768

New Zealand
Miele New Zealand Limited
IRD 98 463 631
8 College Hill
Freemans Bay, Auckland 1011
Tel: 0800 464 353
E-mail: customercare@miele.co.nz
Internet: www.miele.co.nz

Singapore
Miele Pte. Ltd.
29 Media Circle
#11-04 ALICE@Mediapolis
Singapore 138565
Tel: +65 6735 1191
Fax: +65 6735 1161
E-mail: info@miele.com.sg
Internet: www.miele.sg

South Africa
Miele (Pty) Ltd.
63 Peter Place, Bryanston 2194
P.O. Box 69434, Bryanston 2021
Tel: (011) 875 9000
Fax: (011) 875 9035
E-mail: info@miele.co.za
Internet: www.miele.co.za

Thailand
Miele Appliances Ltd.
BHIRAJ TOWER at EmQuartier
43rd Floor Unit 4301-4303
689 Sukhumvit Road
North Klongton Sub-District
Vadhana District
Bangkok 10110, Thailand

United Arab Emirates
Miele Appliances Ltd.
Showroom 1, Eiffel 1 Building
Sheikh Zayed Road, Umm Al Sheif
P.O. Box 114782 - Dubai
Tel. +971 4 3044 999
Fax. +971 4 3418 852
800-MIELE (64353)
E-mail: info@miele.ae
Website: www.miele.ae

Manufacturer: Miele & Cie. KG, Carl-Miele-Straße 29, 33332 Gütersloh, Germany

Miele

TWR 780 WP

en-GB

M.-Nr. 13 148 500 / 00