PHILIPS

Home Access

6000 series

Smart Profile Door Lock

DDL611S-5HBS

User manual

Register your product and get support at www.philips.com/support

The image shows the appearance of the fully functional product. The product's appearance may vary slightly depending on the combination of features. Please refer to the actual product for details.

Contents

1. Important Information 02

Safety
Caution
Disposal of used locks and batteries

2. Assembly 03

Packing list
Exploded views
Notice before assembling
Adjustable latch instructions
Assembly steps

3. Get to know your lock 09

Exterior assembly
Interior assembly

4. Settings 10

Instructions before setting
Master mode
Settings
Network settings

5. Get to use your lock 13

Outdoor/ indoor unlock
Outdoor/ indoor lock
Mechanical key

6. Other features 16

Mute mode
Factory reset
Doorbell

7. Indicators 18

Lock status indicator
System locking indicator

8. Troubleshooting 19

Alert types
How to apply external power source
Battery replacement

1. Important information

Safety

◆ Before using this product, please carefully read through and understand all instructions. Damage resulting from failure to follow these instructions is not covered by the warranty.

◆ Please only use the accessories/components specified by the manufacturer.

◆ Please only use alkaline batteries/lithium polymer batteries provided with this product, or batteries of the same specification/type.

◆ Please do not attempt to forcibly disassemble the product to trigger an alert or cause damage.

◆ Please avoid using sharp objects to scrape the fingerprint sensor, as this may result in permanent damage.

◆ Please avoid exposing the product to areas where water may leak or splash.

◆ To prevent damage to the protective cover, do not expose the product to corrosive substances.

◆ Please avoid hanging objects on the handle as it may interfere with the functioning of the lock.

◆ Please use a soft, damp cloth to wipe fingerprints or dirt from the assembly surface.

◆ Please do not remove the batteries while setting up or operating the product.

◆ Please select professional personnel for door lock installation and follow the installation instructions provided by our company. Do not disassemble the door lock and ensure that the relevant sealed stickers are properly kept.

◆ After completing the installation and troubleshooting, please change the default master PIN code immediately. Ensure that the mechanical keys are stored properly and do not share the PIN codes with others.

◆ After the door lock triggers a low battery alert, promptly replace all batteries and ensure correct polarity during installation.

Caution

◆ Do not place the batteries near sources of ignition to prevent explosions.

◆ Do not use any power source that does not meet safety requirements to power the product.

◆ Please avoid short-circuiting the battery's polarity with metal objects to prevent explosions.

◆ Please ensure that installation or any component replacement is carried out by Philips, a Philips authorized service center, or professional technicians.

◆ Please refrain from using accessories or components made by unauthorized manufacturers or not explicitly recommended by Philips. Using such accessories and components may void the warranty.

Disposal of used products and batteries

◆ You can have your products taken back at authorized Philips service centers. You may receive appropriate compensation if your products meet our refund conditions.

◆ Please familiarize yourself with local regulations regarding the disposal and separate collection of used batteries and products. Proper disposal of used products and batteries helps reduce negative impacts on the environment and human health. It's important to note that batteries should not be disposed of with regular household waste.

2 Assembly

Packing list

This packing list is for reference only. Please refer to the actual packing items.

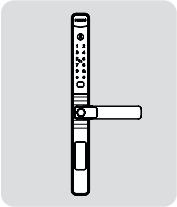

① Exterior assembly with silicon pad

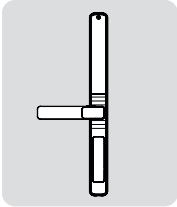

② Interior assembly with silicon pad

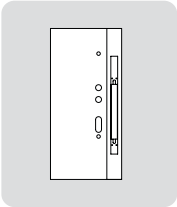

③ Drilling template

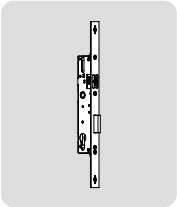

④ Mortise

⑤ QSG

⑥ Warranty card

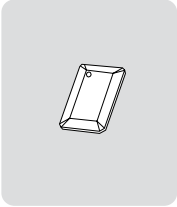

⑦ Key tag

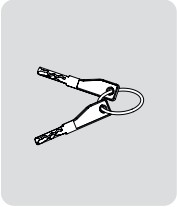

⑧ Mechanical key

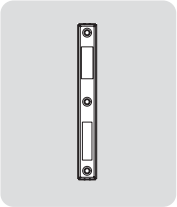

⑨ Strike plate

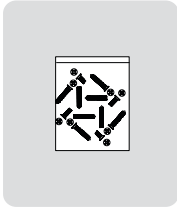

⑩ Installation kit

Exploded views

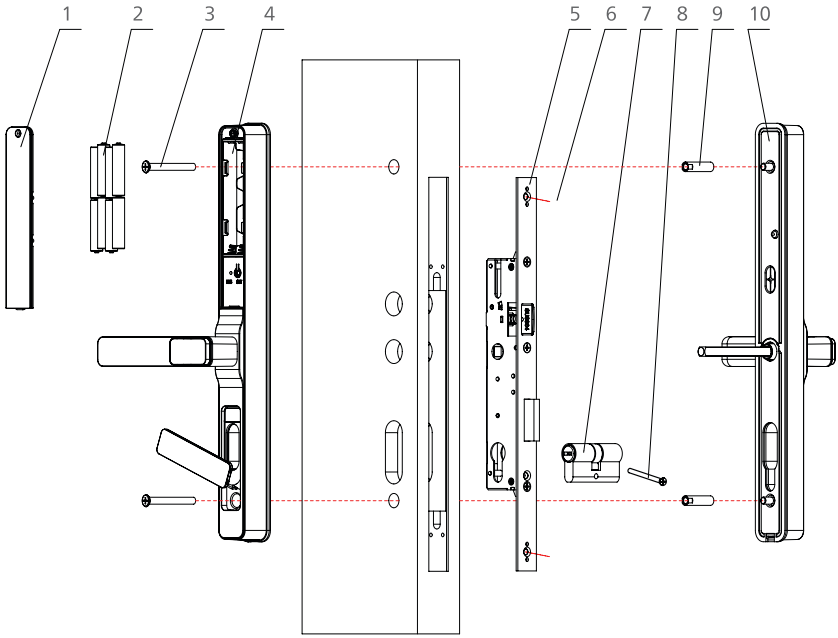

1. Battery cover*1
2. AAA battery*4
3. M6 anchor screw*2
4. Interior assembly*1
5. Mortise*1
6. Mortise anchor screw*2
7. Lock cylinder*1
8. Lock cylinder anchor screw*1
9. M6 screw tube*2
10. Exterior assembly*1

Notice before assembling

Step 1 | Door swing direction

This product applies to doors with four opening directions: left-hand inswing, left-hand outswing, right-hand inswing, and right-hand outswing.

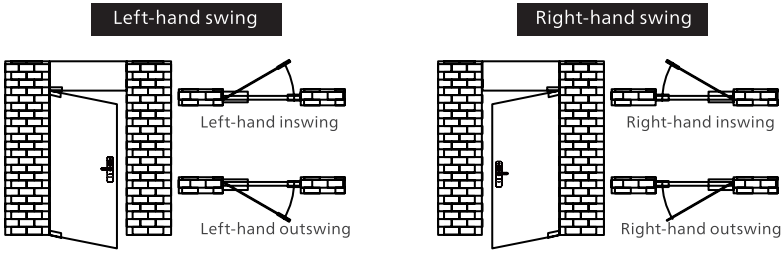

Attention

1. Please choose the appropriate installation kit according to the thickness of the door.
2. The default installation kit is suitable for door thicknesses of 60-90mm. For other door thicknesses, please consult your product dealer.

Step 2 | Adjustable front lever instructions

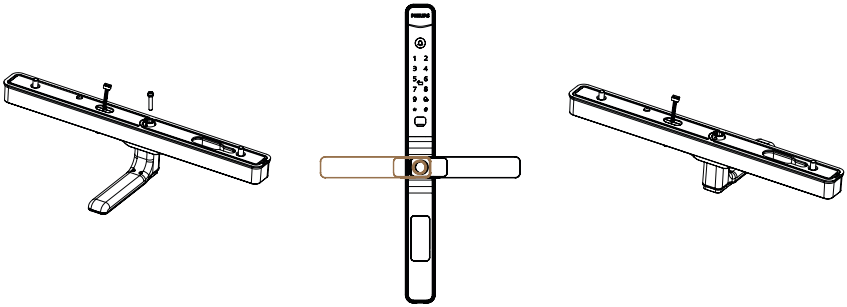

1. Loosen the directional screw and take out from the handle center hole.
2. Rotate the lever 180° to the correct position.
3. Then tighten the directional screw.

Adjustable rear lever instructions

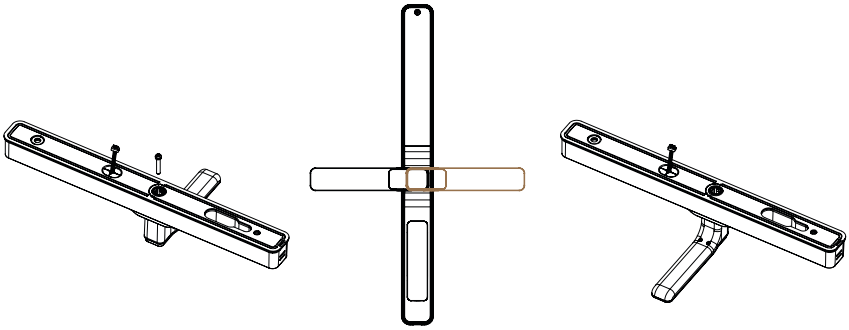

1. Loosen the directional screw and take out from the handle center hole.
2. Rotate the lever 180° to the correct position.
3. Then tighten the directional screw.

Step 3 | Adjustable latch instructions

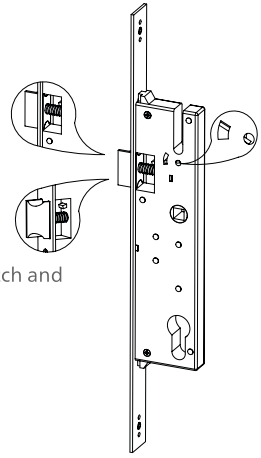

2. Push the latch in and rotate it to 180 degrees
1. Pull the lock-out bolt bar upward
3. Release the latch and let it rebound

Assembly steps

The following assembly steps apply to the right-hand swing doors. For left-hand swing doors, please read through the [Notice before assembling] and adjust the latch direction first.

1. To drill holes in the door according to the drilling template, mount the mortise into the jamb, and secure the two anchor screws.

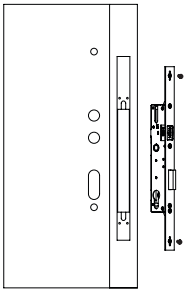

2. Align the lock cylinder into the mortise, then tighten the screws to secure the lock cylinder.

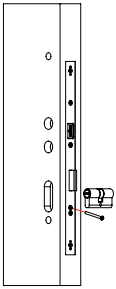

Attention

Please ensure the dead bolt does not protrude during installation.

3. Attach the screw tube onto the exterior assembly and insert the square shaft into the hole accordingly. Please ensure that the protruding part on the square shaft is inserted into the hole until it is securely seated.

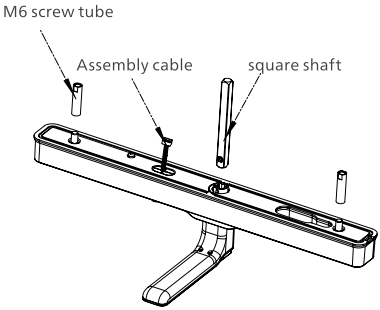

4. Pass the assembly cables through the door hole, align and insert the square shaft to the square shaft hole, so that the exterior assembly can closely fit against the door.

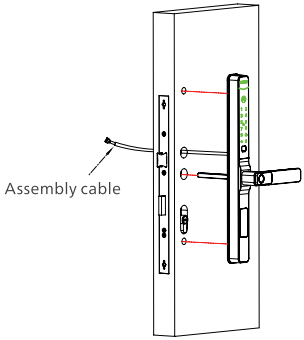

5 Insert the connecting cables into the sockets of the interior assembly accordingly, and align the square shaft with the hole to ensure the interior assembly is firmly attached to the inner surface of the door.

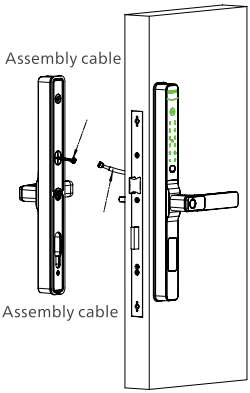

6 Secure the top and bottom of the interior assembly with M6 anchor screws.

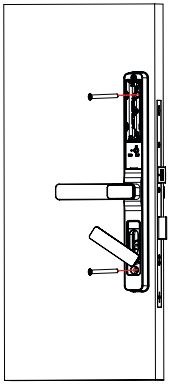

7 Install 4pcs AAA batteries and secure the battery cover with screws. Then put the interior assembly cover on. Finally, check whether each part is connected and assembled in good condition.

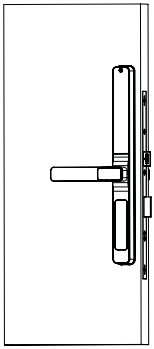

3 Get to know your lock

Exterior assembly

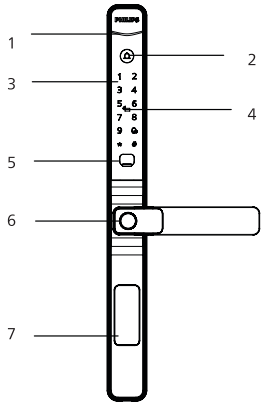

①	Status indicator
②	Doorbell
③	Keypad
④	Key tag recognition area
⑤	Reboot and emergency charging port
⑥	Fingerprint sensor
⑦	Keyway hole

Interior assembly

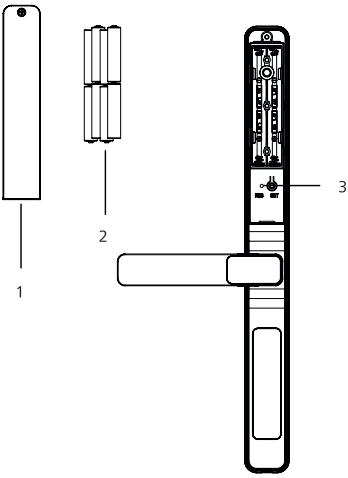

①	Battery cover
②	AAA battery*4
③	RES button

4 Settings

Instructions before setting

◆The system modes include the general mode and dual verification mode.

General mode: door can be opened using any enrolled access method.

Dual verification mode: door can be opened using any two combinations of fingerprint, PIN code, or key tag.

◆User number

You can delete a user's information by the user number without having to delete everything. You can record the user information in the following table for easy management and future reference.

No.	Name	Fingerprint	PIN code	Key tag
00				
01				
02				
03				
04				
05				
06				
07				
08				
09				

◆Icon annotation

Master PIN code | PIN code | No. 00-99 | Master fingerprint | Fingerprint | Key tag | [#] button | [*] button

Attention

1. When navigating the menu, to return to the previous menu, press the [*] key.
2. The default initial PIN code is 12345678.
3. Capacity: 1 set of master PIN code, 100 sets of fingerprints (including 1 set of master fingerprint), 20 sets of user PIN codes, and 100 sets of key tags.

Master mode

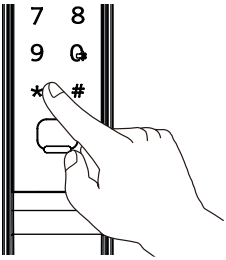

Master PIN code

After illuminating the keypad, without inputting any other numbers, press the [*] key twice, then enter the master PIN code, and press [#] to confirm to enter master mode.

Attention

If the master PIN code is set to the default PIN code, you must navigate to [1] and then [5] in master mode to change the master PIN code before proceeding with other operations.

Master fingerprint

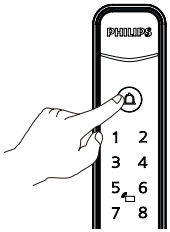

After illuminating the keypad, without entering any other numbers, press the [*] key twice. Then, place the enrolled finger on the fingerprint sensor to enter master mode.

Attention

1. The door lock is initially without a master fingerprint. Please enroll a master fingerprint before use.
2. Do not enroll the master fingerprint as the same as any user fingerprint.

Settings

Add a user PIN code

Press the [*] key twice, enter the master PIN code, and then press the [#] key to confirm.

Press [1] to enter settings, then press [1] again to add a user. The door lock will automatically detect and add PIN codes, fingerprints, and key tags. Users can simply add the desired access method.

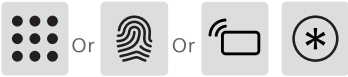

Add a PIN code: Enter a new user PIN code, press [#] to confirm, then re-enter the PIN code and press [#] again. After the successful addition prompt, press [*] to return to the previous menu until exiting master mode.
Add a fingerprint: Place your finger on the fingerprint sensor. When prompted to "Please remove your finger and try again," lift and then re-place your finger on the sensor. Repeat this process several times. After hearing the successful addition prompt, press the [*] key to return to the previous menu until exiting master mode.
Add a key tag: Enroll a new key tag. After the successful addition prompt, press the [*] key to return to the previous menu until exiting master mode.

Attention

Fingerprints successfully enrolled on the front panel fingerprint reader can also be used on the rear panel fingerprint reader without having to re-enroll on the rear panel.

Modify or add a master fingerprint

Press the [*] key twice, enter the master PIN code, and then press the [#] key to confirm.

Press [1] to enter settings, then press [4] to enter the option for adding or modifying the master fingerprint.

No master fingerprint set: Input a new user fingerprint, which will automatically become the master fingerprint. After hearing the successful addition prompt, press the [*] key to return to the previous menu until exiting master mode.
Master fingerprint already set: Input a new user fingerprint, which will replace the existing master fingerprint. After hearing the successful addition prompt, press the [*] key to return to the previous menu until exiting master mode.

Modify a master PIN code

Press the [*] key twice, enter the master PIN code, and then press the [#] key to confirm.

Press [1] to enter settings, then press [5] to modify the master PIN code.

Enter a new master PIN code, press [#] to confirm, then re-enter the PIN code, and press [#] to confirm. After the successful setting prompt, press the [*] key to return to the previous menu until exiting master mode.

Delete a user

Press the [*] key twice, enter the master PIN code, and then press the [#] key to confirm.

Press [1] to enter settings, then press [6] to delete a user.

Choose the access method to delete: Press [1] to delete a PIN code; Press [2] to delete a fingerprint; Press [3] to delete a key tag. Follow the voice prompts for specific deletion instructions. After successfully deleting, press the [*] key to return to the previous menu until exiting master mode.

Network settings

Download

Scan the QR code below or search for 'Home Access' in the app store to download and install.

Add a door lock

1. Install batteries and power up the door lock.
2. Turn on Bluetooth on your phone, open the app, tap 'Add a device' on the homepage, and follow the prompts in the app to complete the network binding.

5 Get to use your lock

Outdoor/ indoor unlock

Outdoor unlock

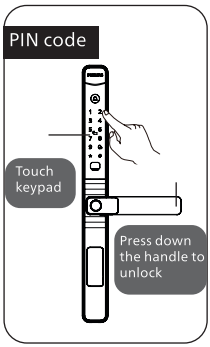

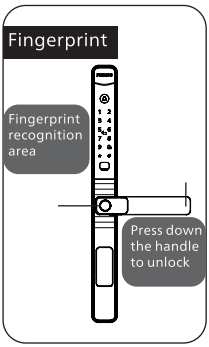

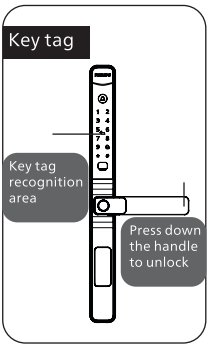

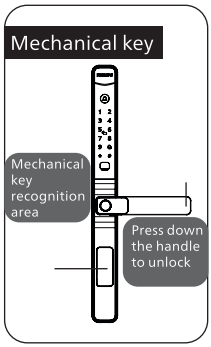

① Touch to light up the keypad. Enter the pre-enrolled PIN code, then press [#] key to confirm.

② After hearing the voice prompt "Door opened", push down the handle to open the door.

① Place the enrolled finger correctly on the fingerprint sensor.

② After hearing the voice prompt "Door opened", push down the handle to open the door.

① Place the pre-enrolled key tag on the card recognition area.

② After hearing the voice prompt "Door opened", push down the handle to open the door.

① Press the bottom of the keyhole cover on the front assembly to open it.

② Insert the key to unlock.

Indoor unlock

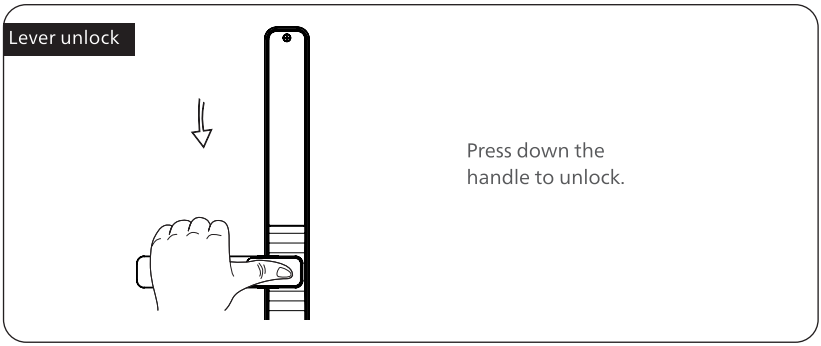

Outdoor/ indoor lock

Outdoor lock

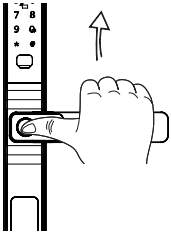

After closing the door, lift the lever upward to engage the latch bolt and complete the locking process.

Indoor lock

After closing the door, lift the lever upward to engage the latch bolt and complete the locking process.

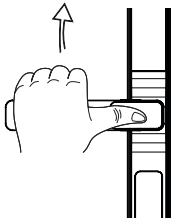

Mechanical key

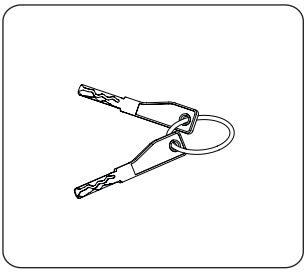

① Press the lower part of the keyway cover, rotate the upper part of the cover, and reveal the keyway hole.

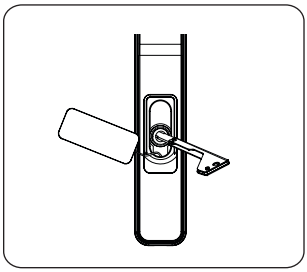

② Insert the mechanical key into the keyway hole and rotate to unlock after inserting firmly.

Attention

1. Avoid using the mechanical key regularly. Only resort to it in emergencies such as drained battery, forgotten PIN code, or system malfunctions.
2. Store the mechanical key outside the home, ideally in the office, car, or a secure location, for easy access during emergencies.

6 Other features

Mute button

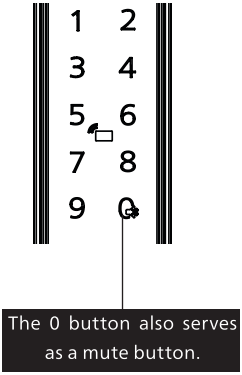

Function:
Activate mute mode by pressing the mute button to silence voice prompts during door unlock—great for quiet times to avoid disturbing others in the household.

How to use:
1. Switching voice mode to mute mode: while the system is awake, press and hold the "Mute" button for 2 seconds to enter mute mode. The voice prompt will say "Mute mode".
2. Switching mute mode to voice mode: while the system is awake, press and hold the "Mute" button for 2 seconds to return to voice mode. The voice prompt will say "Voice mode".

Factory reset

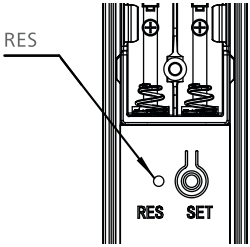

Function:
Empty all user data and restore to factory default settings.

How to use:
Double-press the [RES] button with a sharp object, which will erase all user information and restore the lock to its default settings.

Doorbell

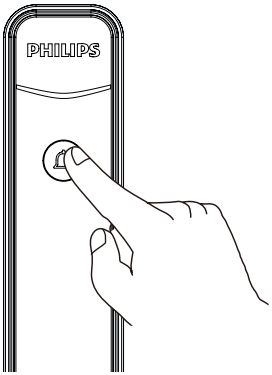

Function:
The indoor speaker plays a ding-dong sound, informing that someone is at the door.

How to use:
When the doorbell is pressed, the indoor speaker will emit a ringing sound.

Attention

1. Upon pressing the doorbell, the indicator will light up in blue and flash.
2. The 'Do Not Disturb' mode can be set via the app. Once set, pressing the doorbell will not emit any sound indoors.

7 Indicators

Status indicator

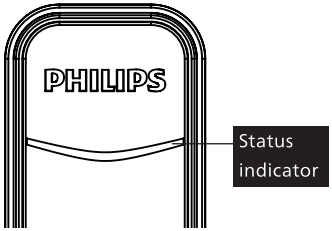

Blue:when the system wakes up, the indicator turns blue, indicating that the door lock is ready for operation.
Green:when the door lock is unlocked, the indicator turns green, indicating that the door has opened.
Red:when the door lock is locked, the indicator turns red, indicating that the door has closed.

System locking indicator

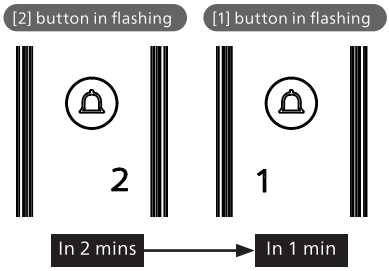

If there are five consecutive incorrect attempts within five minutes using fingerprint, PIN code, or key tag, the door lock will be locked for two minutes.

Attention
Prompts will only appear upon touching to wake up the keypad or when verifying access methods.

8 Troubleshooting

Alert types

Tamper alert

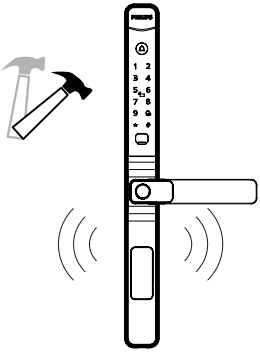

Triggering 1: after the door gap is pried open, the assitant bolt will extend.
Alert method: continuous, repeated alert sound.
Off:the alert will be off automatically or after a successful verification of any access method.

Triggering 2: exterior assembly is pried open, and not properly aligned with the door.
Alert method: continuous, repeated alert sound.
Off:the alert will automatically be off or upon successful verification of any access method from outside or unlocking from inside.

How to apply external power source

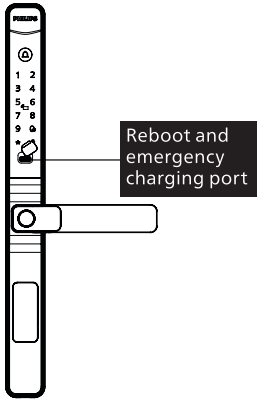

When the battery voltage is low and you're unable to unlock the door from outside, you can use a 5V power bank as an emergency power source for the door lock. After unlocking the door, please replace the battery promptly. In case of system malfunction and inability to open the door from outside, you can also use a 5V power bank to provide power to the door lock. Upon powering up, the system will automatically restart.

Battery replacement

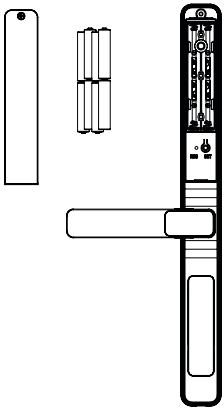

1.The door lock operates on four AAA alkaline batteries.
2. You can remove the battery cover for replacement by unscrewing the screw located at the top of the cover.

Philips and the Philips Shield Emblem are registered trademarks of Koninklijke Philips N.V. and are used under license. This product has been manufactured by and is sold under the responsibility of Shenzhen Conex Intelligent Technology Co., Ltd., and Shenzhen Conex Intelligent Technology Co., Ltd. is the warrantor concerning this product.