USER MANUAL

TURBRO

PORTABLE AIR CONDITIONER

Model:

Finnmark FMP05AC
Finnmark FMP06AC

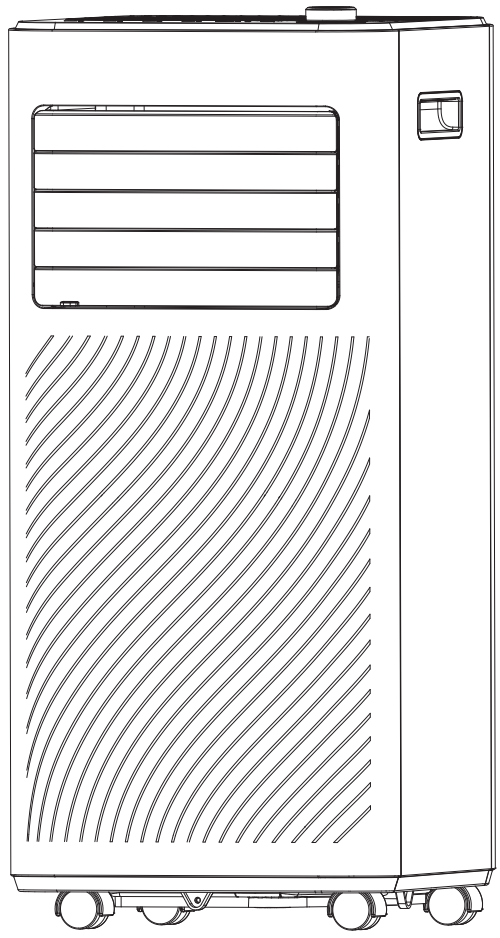

Before using TURBRO Portable Air Conditioner, please read this manual carefully and retain it for future reference.

Tips for First-Time Use

1. Allow the unit to sit upright for at least 3-4 hours before powering on. Shipping carriers may set the unit on its side, which causes the refrigerant to pool in certain areas. Standing the unit upright for 3-4 hours allows the refrigerant to move freely within the coils.
2. Some parts with sharp edges may cause injury, so gloves are highly recommended for unpacking and installing.
3. Run the unit continuously for 24 hours after letting the unit stand upright for 3-4 hours. This allows the unit to work out any “kinks” that may have resulted during shipping from our factory to your doorstep.
4. If you have any difficulties during installation, please contact Customer Support Team via support@turbro.com for help.
5. If you have any problems with your product, please send us an email before submitting a return request, as there might be a simple solution for your issue.

Please read this operating manual carefully before operating the unit.

This unit uses a flammable refrigerant.

Before using the appliance, read the owner's manual first.

Before installing the appliance, read the installation manual first.

Before repairing the appliance, read the service manual first.

The figures in this manual may be different from the material objects, please refer to the material objects for reference.

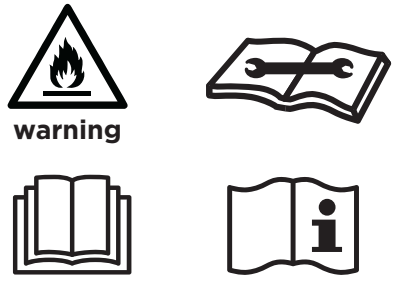

Refrigerant Disclaimer

The refrigerant in this machine is fluoride R32, which is specially cleaned. The refrigerant is flammable and does not have any odor. Furthermore, it can lead to explosions under certain conditions. The flammability of the refrigerant is very low and can be ignited only by fire. Under normal operating conditions, these issues should not be of any major concern.

Compared to common refrigerants, R32 is a nonpolluting refrigerant with no harm to the ozonosphere. The effect on greenhouse effect is also lower than other common refrigerants. R32 has very good thermodynamic features which lead to high energy efficiency. The units, therefore, need less refrigerant filling than other common refrigerants.

⚠ WARNING

1. Keep ventilation openings, in the appliance enclosure or in the built-in structure, clear of any debris or obstructions.
2. Do not attempt to accelerate the defrosting process or clean the unit in any way other than those recommended by the manufacturer. Should repair be necessary, contact TURBRO Customer Service Team.
3. Any repairs carried out by unqualified personnel may be dangerous.
4. Do not pierce or burn this appliance.
5. The appliance shall be installed, operated, and stored in a room with a floor area larger than 43ft² (4m²).
6. This appliance is filled with flammable gas R32. For repairs, strictly follow the manufacturer's instructions only. Be aware that this refrigerant does not contain odor.
7. Read the user manual completely before using this appliance.

CONTENTS

SAFETY INFORMATION 01

PARTS DESCRIPTION 03

INSTALLATION INSTRUCTIONS 05

- Installation Location 05
- Tool Suggested (Not Included in package) 05
- Installing in Double-Hung Sash / Sliding Casement Windows 06
- Installing Exhaust Hose 08

OPERATING INSTRUCTIONS 09

- Control Panel 09
- Operating from the Control Panel 09
- Operating from the Remote Control 11
- Self-Diagnosis 13
- Water Drainage Methods 13
- Tips for Correct Use 15

CLEANING 16

- Cleaning the Outer Case 16
- Cleaning the Air Filters 16
- Maintenance Checklists 17

TROUBLESHOOTING 18

WARRANTY & CUSTOMER SUPPORT 20

- Warranty Information 20
- Customer Support 20

SAFETY INFORMATION

- Please read all instructions before use and save this user manual for future reference. A digital version can be obtained from Customer Support.
- Your safety and the safety of others are very important to us. We have provided many important safety messages throughout this manual and on the appliance itself. Always read and follow all posted safety messages.
- To reduce the risk of fire, electric shock, injury, or death to persons using or near this appliance, please follow some basic safety precautions. These precautions include, but are not limited to, the following:

Installation and Setup

- This appliance is not intended for use by any persons (including children) with reduced or restricted physical, mental, or sensory capabilities, or lack of experience and knowledge, unless under the direct supervision of a person responsible for their safety.
- Please keep plastic bags and sheets out of the reach of children as they might be mistakenly used for play. Packaging materials can become airtight chambers and may pose a risk of suffocation if not disposed of properly.
- When installing or moving the appliance, be careful not to pinch, crush, or damage the power cord.
- Never attempt to operate this appliance if it visibly damaged, malfunctioning, disassembled or has missing or broken parts. This includes exposed wiring on a damaged cord or electrical plugin. All repairs and servicing must be performed by qualified service personnel. Use only authorized TURBRO factory OEM parts.
- Keep the product away from fire. Do not store or use flammable gases or materials near the appliance.
- Do not use heating equipment near the appliance.
- In the event of a gas leak (propane gas, LP gas, etc.) do not operate this or any other appliance. Open a window or door to ventilate the area immediately.
- Only use the appliance in an upright position. Make sure the angle of inclination<10°. Always place the appliance on a stable, flat, level surface to prevent the air conditioner from overturning.

Electrical Safety Warning

- Always plug into a fixed 115V AC ground outlet.
- Push the power plug all the way into the wall outlet so that it will not loose.
- Never plug or unplug the appliance with wet hands.
- Always grip the plug firmly and pull straight out from the outlet when taking it out.
- Never unplug the appliance by pulling on the power cord.
- Never use the appliance if the outlet is damaged or loose.

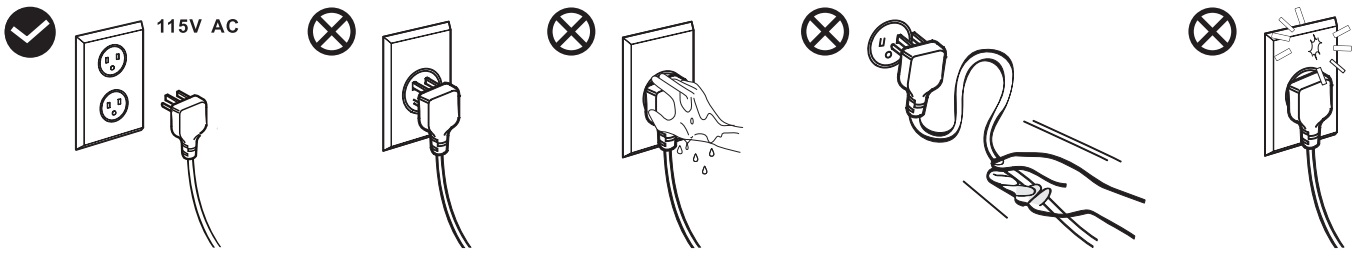

- This product should be plugged directly into a power outlet. Power outlets should be properly rated, protected, and sized in order to avoid electrical overload. Do not use a multiple-outlet power strip or extension cord. Failure to do so may result in short-circuit or electrical shock.
- Do not use an AC plug adapter with this appliance.
- Do not cut or remove the third (ground) prong from the power cord.

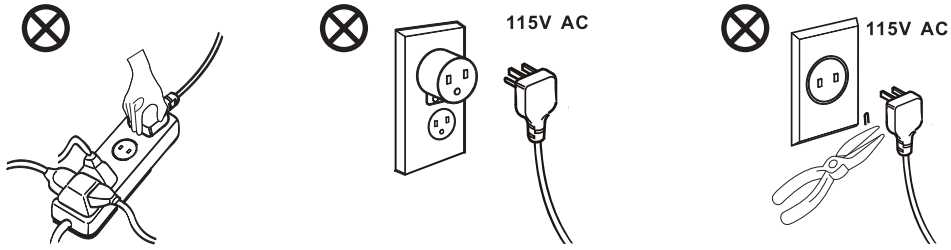

- Your air conditioner must be used in a properly grounded wall receptacle. If the wall receptacle you intend to use is not adequately grounded or not protected by a time-delay fuse or circuit breaker, have a qualified electrician install the proper wall power receptacle before using this appliance.
- Be sure that the air conditioner is properly grounded. To minimize shock and fire hazards, proper grounding is important. The power cord is equipped with a three prong grounding plug for protection against shock hazards.
- Do not cover the power cord with a rug or carpeting.
- Do not rest hot or heavy objects on the appliance and power cord.
- If the power cable is damaged, it must be replaced by the manufacturer or an authorized technical service center in order to avoid all risk.
- Do not damage, alter, excessively bend, twist, pull or heat the power cord.
- Do not run the air conditioner without the white plastic shell in place. This could result in mechanical damage within the air conditioner.
- During the installing or moving the appliance, be careful not to pinch, crush, or damage the power cord.
- Always unplug the unit from the outlet before cleaning or maintenance operations.

Power Cord Operation (LCDI Plug)

The power cord used with this air conditioner contains a current detection device designed to reduce the risk of fire. Always finish the test of the LCDI (Leakage Current Detection and Interruption) plug before use:

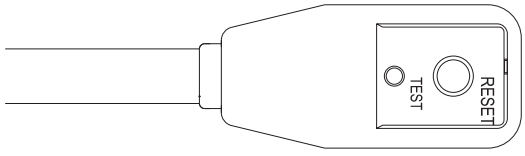

1. Plug in the Air Conditioner.
2. The power supply cord head has two buttons, a TEST button and a RESET button. Press the TEST button and notice a click as the RESET button pops out.
3. Press the RESET button. Once again notice a click as the button engages.
4. The power supply cord will now supply electricity to the unit.

⚠ WARNING

If the TEST button does not cause the circuit breaker trip or the RESET button will not stay engaged, unplug the air conditioner immediately and contact TURBRO Customer Support.

NOTE:

- Do not use this device to turn the unit on or off.
- Always make sure the reset button is pushed in for correct operation
- The power supply cord must be replaced if it fails to reset when either the test button is pushed, or it cannot be reset.
- If power supply cord is damaged, it cannot be repaired. It must be replaced by one obtained from the product manufacturer.

PARTS DESCRIPTION

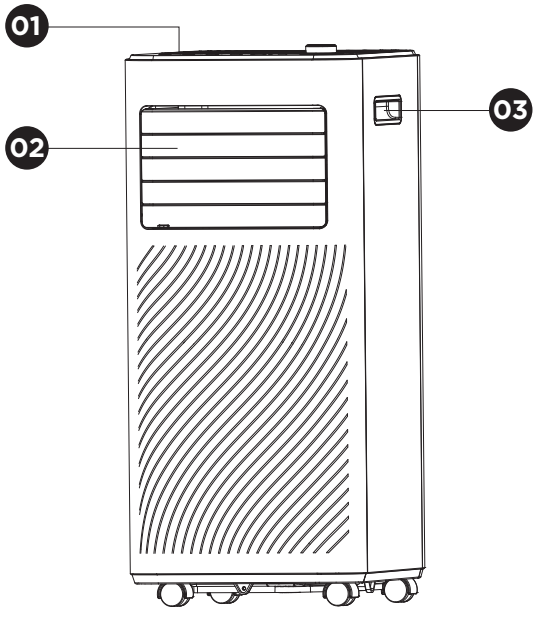

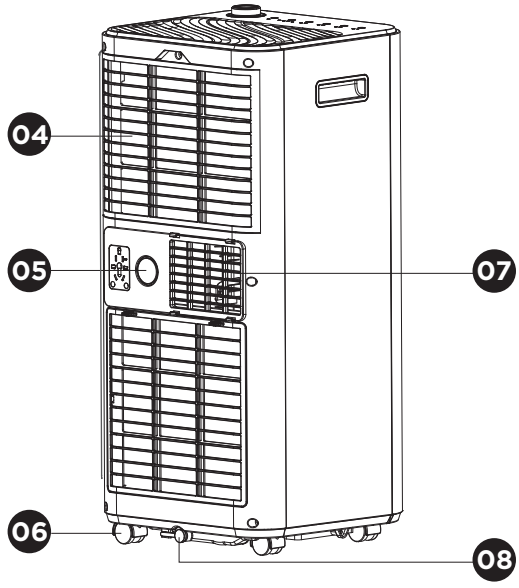

01 Control Panel
02 Horizontal Airflow Louver
03 Handle (Both sides)
04 Air Intake Grille
05 Middle Condenser Drain
06 Caster Wheels
07 Air Outlet Grille
08 Condenser Drain

PARTS	PARTS NAME	QUANTITY
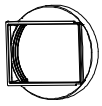	Hose Inlet	1 unit
	Exhaust Hose	1 unit
	Hose Outlet	1 unit
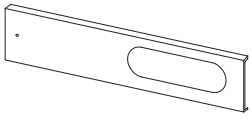	Window Panel	1 unit
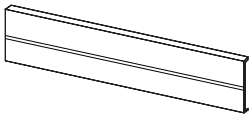	Adjustment Panel	1 unit
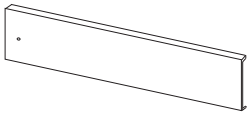	Extension Panel	1 unit
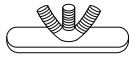	Screws and Nuts for Adjustment Panel	2 units
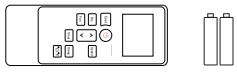	Remote Control (with 2x AAA Battery)	1 unit
	Drainage Hose	1 unit
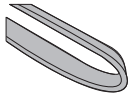	Self-adhesive Foam Seal	2 units
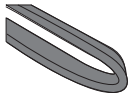	Foam Seal	2 units

INSTALLATION INSTRUCTIONS

Installation Location

- The air conditioner should be placed on a firm floor to minimize noise and vibration. For safe and secure positioning, place the unit on a smooth, level floor strong enough to support the unit.
- The unit must be installed near a properly rated grounded socket.
- Allow at least 19.7 inches / 50 cm of space away from the wall with the window for efficient working. The height from the exhaust hose to the floor is 35.5 inches(90 cm).
- Never place any obstacles around the air inlet or outlet of the unit.
- The hose can be compressed or extended moderately, but it is desirable to keep the length to a minimum. Also make sure the hose does not have any sharp bends or sags. See the image below.

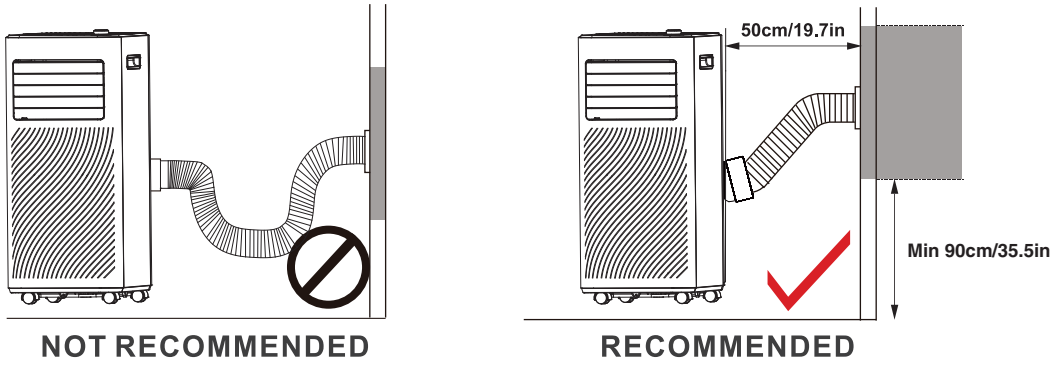

Tool Suggested (Not Included in package)

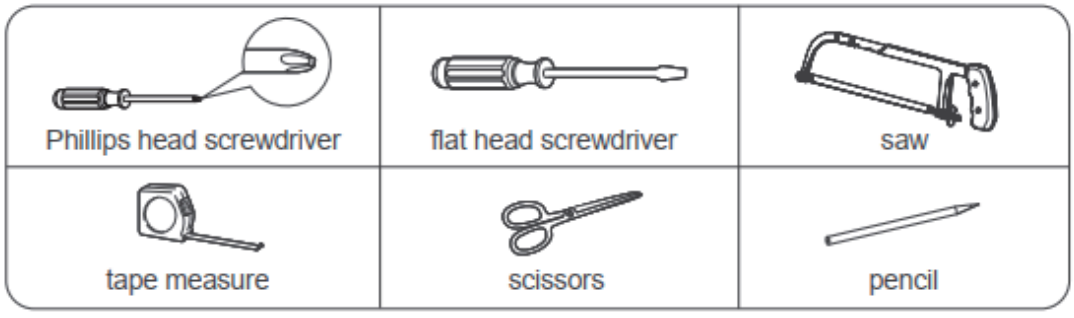

The window panel kit has been designed to fit most standard windows that open vertically or horizontally; however, it may be necessary for you to improvise/modify some aspect of the installation procedures for certain types of window.

Minimum and maximum window openings: 11 - 67 Inches

NOTE: If the width of your window is smaller than 25.6 inches, please remove the adjustment panel and then cut the window panel to make the width of the window panel the same width as your window. Remember to measure twice and cut once so you don't cut it too short.

Installing in Double-Hung Sash / Sliding Casement Windows

A. Required Parts:

- Foam Seal
- Window Panel
- Adjustment Panel
- Extension Panel
- Screw and Nut

B. Assembly:

a. Cut the foam seal to the proper length and attach it to the window sash.

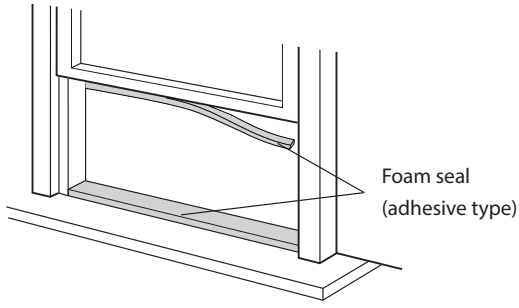

b. Install the screws and nuts on the window panel 01 and tighten them(don't tighten them completely). Install the adjustable panel 02 to the window panel and the extension panel 03 by sliding the screw kit into the groove of the adjustable panel.

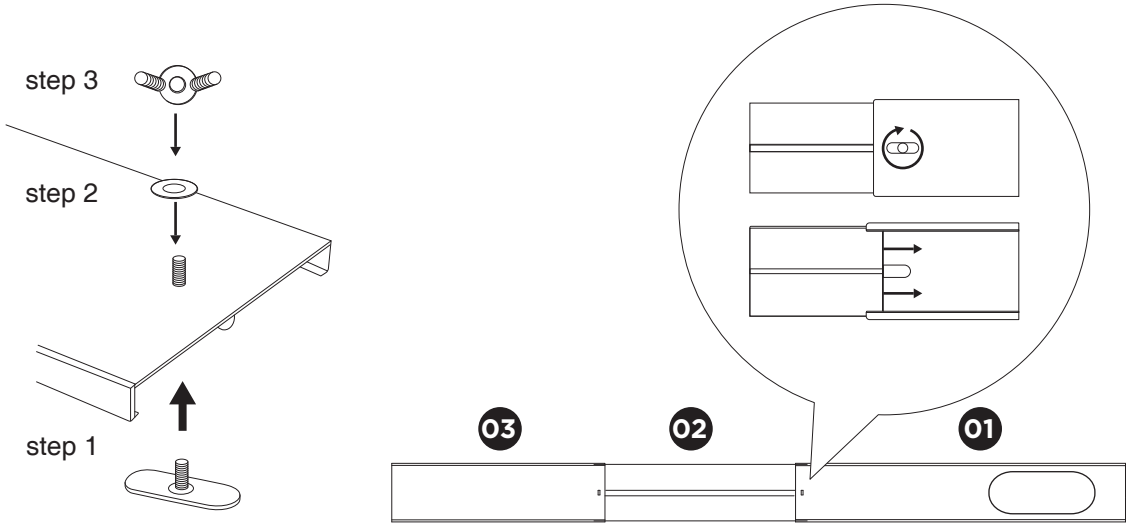

c. Place the assembled window panels on the window sash and adjust until it fully covers the width of your window.

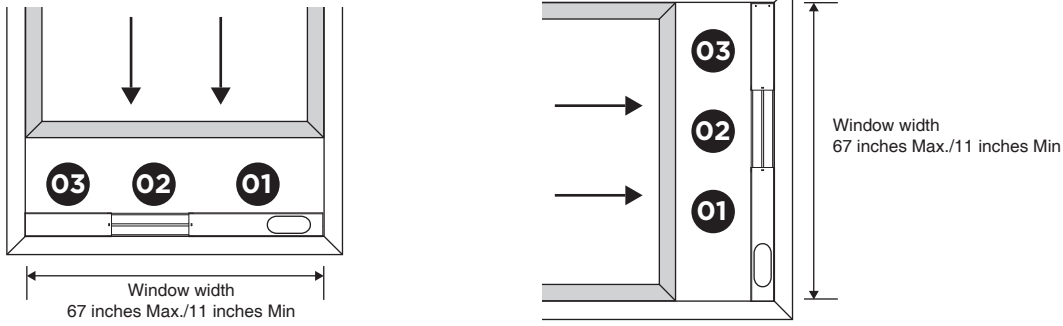

NOTE:

If the width of your window is smaller than 25.6 inches, please remove the adjusting panel from the window panel and then cut the window panel to make the width of the window panel the same width as your window.

d. Tighten the screw completely to fix the panel kit at the desired position.

e. Close the window securely against the assembled window panel kit.

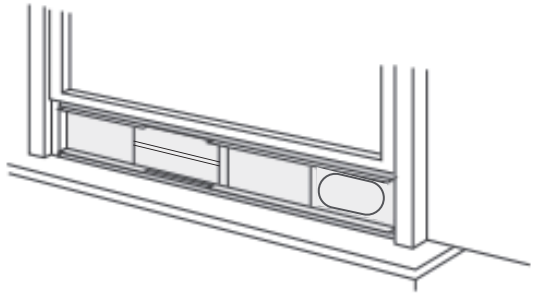

f. Cut the foam seal to an appropriate length and seal the open gap between the top window sash and outer window sash.

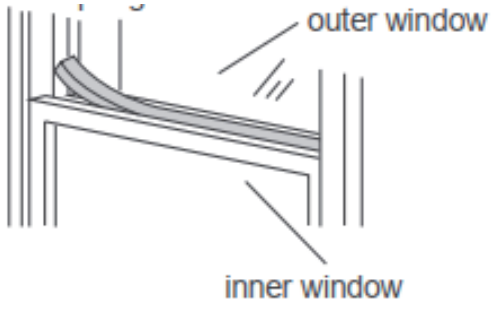

Installing Exhaust Hose

COOL & DRY MODE: The air exhaust hose should be connected to the portable air conditioner.
FAN MODE: The air exhaust hose can be disconnected from the portable air conditioner in fan mode or left connected.

A. Required Parts:

- Hose Inlet
- Exhaust Hose
- Hose Outlet

B. Assembly:

a. Rotate the hose inlet and the hose outlet clockwise to install them to the exhaust hose.

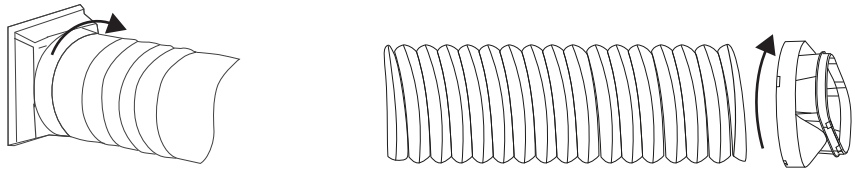

b. Install the hose inlet (the notched side on the left) into the groove at the back of the unit and extend the exhaust hose.

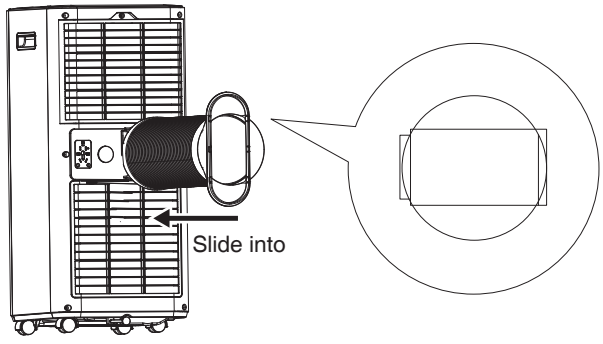

c. Affix the Hose Outlet to the window panel.

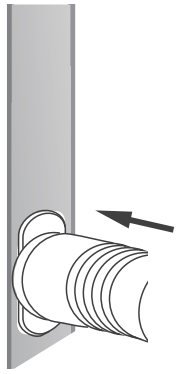

NOTE: The exhaust hose can be compressed or extended moderately, but it is desirable to keep the length to a minimum. Also, make sure that the hose does not have any sharp bends.

OPERATING INSTRUCTIONS

Control Panel

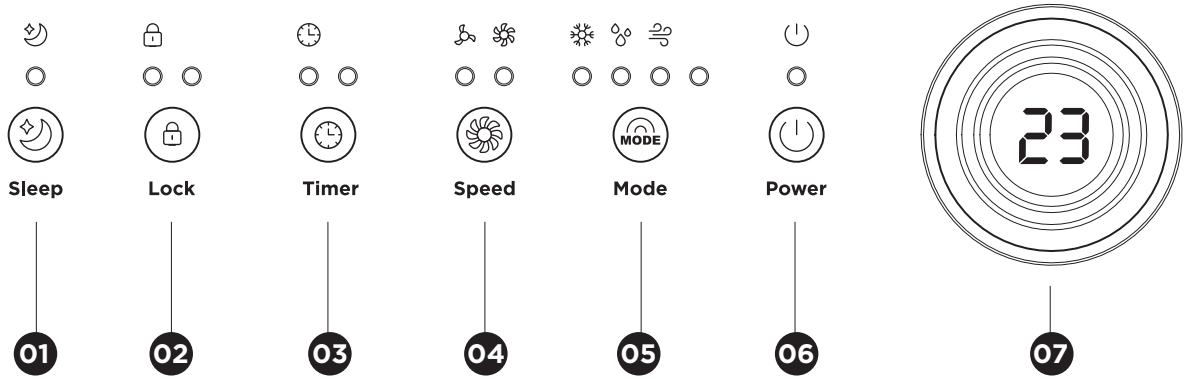

01 Sleep Button
02 Child Lock Button
03 Timer Button
04 Fan Speed Button
05 Mode Button
06 Power Button
07 Control Knob and Screen

Operating from the Control Panel

The control panel enables you to manage all the main functions of the appliance.

TURNING THE APPLIANCE ON

- Plug into the main socket, and all lights will flash once. Then the appliance is on standby mode.
- Press the ON/OFF Button ⏻ then the display screen will light up.
- Never turn the air conditioner off by unplugging it from the power source. Always press the Power Button ⏻, then wait for a few minutes before unplugging. This allows the appliance to perform a cycle of checks to verify the operation.
- Pressing Mode Button MODE will cycle through the following modes, as shown below:

FAN ▶ COOL ▶ DRY

FAN MODE

When using this mode, the unit doesn't need to be attached to the air exhaust hose.

- Press the Mode Button MODE , and the default wind indicator lights up. The screen will show the current room temperature.
- Press the Fan Speed Button to select the fan speed.

	Low Speed
	High Speed

COOL MODE

Ideal for hot muggy weather when you need to cool and dehumidify the room.

- Press the Mode Button MODE until the snowflake indicator lights up. The screen will appear 23 .
- Turn the knob left or right to select your desired temperature 61°F-90°F (16°C-32°C).
- Press the Speed Button to select the fan speed.

	Low Speed	To operate under low noise.
	High Speed	To reach the desired temperature as rapidly as possible.

Note: The air conditioner will stop cooling but will still blow air if the room temperature is lower than the selected temperature.

DRY MODE

Ideal to reduce room humidity (spring and autumn, rainy periods or in damp rooms, etc).

Note: Before using the dry mode, please make sure the air exhaust hose attached to the appliance to allow the moisture to be discharged externally and the drain hose attached to avoid any leaking. (The Water Drainage Methods will be mentioned in the following parts)

- Press the Mode Button MODE until the water-drop indicator lights up. The screen will show the current room temperature.
- In this mode, the unit will run at the low speed and the fan speed cannot be adjusted.

TIMER FUNTION

This timer can be used to delay the unit start up or shutdown, this avoids wasting electricity by optimizing operating periods.

Setting the Timer to Power the Unit On

- When the unit is off, press the Timer Button , the clock indicator lights up, and the screen digital flashes. Turn the knob to choose the delayed start-up time and wait for about 5 seconds. When the timer is active, the clock indicator will stay on and the screen will display the countdown time.
- Press the Timer Button again to adjust the timer. Turn the knob until the digital shows “00”, the timer will be canceled and the clock indicator will disappear.

Setting the Timer to Power the Unit Off

- With the unit on, please press the Timer Button , the clock indicator lights up, and the screen digital flashes. Turn the knob left or right to choose the delayed shut-down time and wait for about 5 seconds. When the timer is active, the clock indicator will stay on.
- Press the Timer Button again to adjust the timer. Turn the knob until the digital shows “00” and wait for 5 seconds, the timer will be canceled and the clock indicator will disappear.

SLEEP FUNCTION

This function is useful to use at night as it maintains the room at optimum temperature without excessive fluctuations in either temperature or humidity.

Note: Sleep function is available only on COOL mode. In this mode, the fan speed is always low. (After running in sleep function for 12 hours, the unit will automatically shut down.)

- Press the Sleep Button and the moon indicator lights up with half-dim light. Other indicators will also become half-dim. The beep sound will disappear.

- In sleep function, the AC temperature will increase by 2°F in the first hour. After another hour the temperature will increase by 2°F and then keep on running at this temperature.
- Press the Sleep Button again to cancel this function and the moon indicator will disappear.

CHILD LOCK FUNCTION

- Long press the Child Lock Button and the lock indicator lights up. Under this function, all buttons are not available and settings cannot be changed.
- Long press the Child Lock Button again to cancel this function.

TEMPERATURE SCALE SWITCH

With the unit on, long press the Mode Button MODE for 3 seconds, then you can switch the unit of temperature.

For example:

-In Celsius, the digital displays like fig 1. The range is 16-32 degrees.
-In Fahrenheit, the digital displays like fig2. The range is 61-90 degrees.

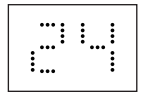
fig1


fig2

Operating from the Remote Control

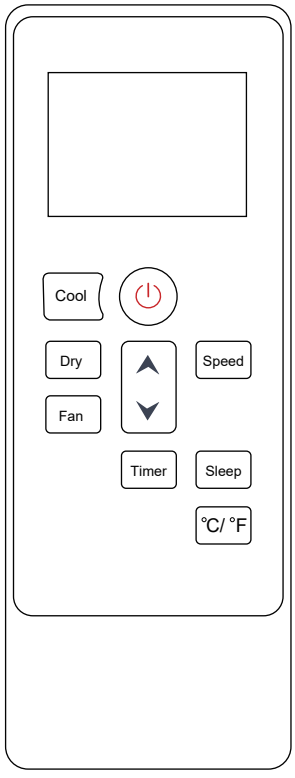

BUTTONS	FUNCTION
Cool	To choose cool mode
⏻	To turn on/off the air conditioner
Dry	To choose dry mode
Speed	To adjust fan speed
Fan	To choose fan mode
▲	To increase the set temperature or to lengthen the time in timer setting
▼	To decrease the set temperature or to reduce the time in timer setting
Timer	To switch on/off the timer function
Sleep	To switch on/off the sleep mode
°C/°F	Temperature Scale Switch

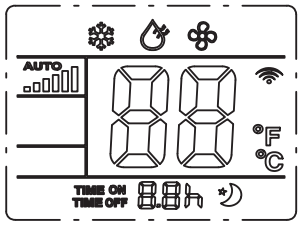

SYMBOLS	MEANING	SYMBOLS	MEANING
❄	COOL MODE		SIGNAL
	DRY MODE	°F °C	TEMPERATURE SCALE SWITCH
	FAN MODE	TIME ON TIME OFF	TIMER
	FAN SPEED (LOW / HIGH)		SLEEP FUNCTION
AUTO	Not available for this model		TEMPERATURE

TIMER FUNCTION

- Press the “Timer” Button, “TIME ON/ TIME OFF” will appear and digital will flash on the screen.
- Choose the required delayed time by pressing ▲ and ▼ buttons. Then wait for 5 seconds. The timer will be activated, and the indicator will stay on and display your set timer.
- Press the “Timer” button twice to deactivate the timer function.

Using the remote control

The maximum range of the remote control is 23 feet / 7 meters away from the appliance (without obstacles between the remote control and the receiver).

The remote control must be handled with extreme care. Do not drop it or expose it to direct sunlight or sources of heat. If the remote control do not work, please try to take out the battery, and put it back.



Inserting or replacing the batteries

- Remove the cover on the rear of the remote control
- Insert two "AAA" 1.5V batteries in the correct position (see instructions inside the battery compartment)

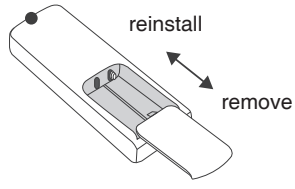

NOTE:

- If the remote control unit is replaced or disposed of, the batteries must be removed and discarded in accordance with current legislation as they are harmful to the environment.
- Do not mix old and new batteries. Do not mix alkaline, standard (carbon-zinc) or rechargeable (nickel-cadmium) batteries.
- Do not dispose of batteries in fire. Batteries may explode or leak.
- Remove the batteries if the remote control won’t be used for a long time, .

Self-Diagnosis

The unit has a self-diagnosis system to identify a number of malfunctions. Error messages will be displayed on the display screen and beep 10 sounds. Press any button to stop the beep sounds.

IF IS DISPLAYED	WHAT DOES IT MEAN?	WHAT SHOULD I DO?
E0	Communication faults between main PCB and display PCB.	If this is displayed, contact TURBRO service team.
E1, E2	Sensor damaged.	If this is displayed, contact TURBRO service team.
F t	The safety tank is full.	Empty the internal safety tank, following the instructions in the “Water Drainage Methods”.

Water Drainage Methods

TURBRO portable air conditioner comes with an auto-evaporation system. The unit can automatically evaporate the condensated water. There is no need to empty the water except in humid conditions. When you run the dry mode, then it’s required to install the hose as the unit might pull more water from the air.

When the water tank is full of water, the unit stops running and will show “ F t ”. The compressor and fan won't restart until the water tank has been drained.

There are 2 ways to remove collected water from the air conditioner.

Method A: Manual Drainage

a. Unplug the unit from power source.

b. Place a receptacle pan (does not include) under the lower drain port.

c. Remove the cap from the lower drain port and allow the water to flow into the pan. Your pan may not hold the full contents of the water tank. A number of fills of your pans may be required.

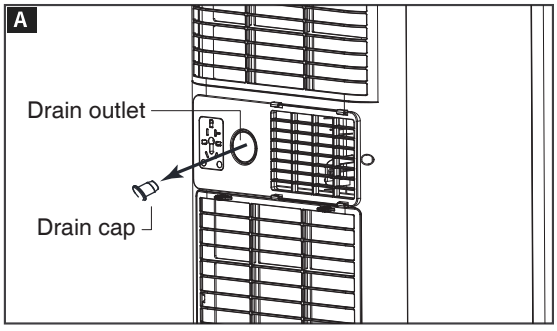

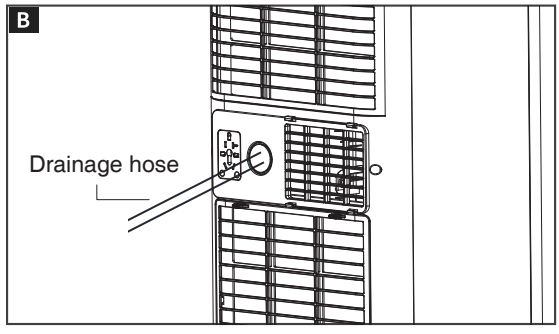

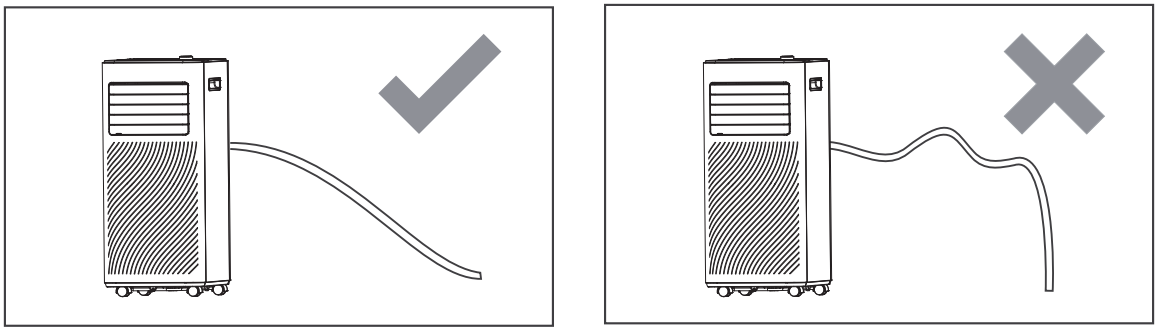

d. Tilt the unit by lifting it slightly upwards from the front until no more water drains from the outlet.

e. After the water is drained, firmly replace the cap on the lower drain.

f. Restart the air conditioner by pressing the power button. Ensure that the unit is in COOL or DRY mode. The compressor will start approximately 3 minutes after the unit is turned on.

Method B: Continuous Draining

a. Unplug the unit from power source.

b. Remove the cap from the lower or middle drain port. During this step, some residual water may split so place a receptacle pan (not included) under the drain port to collect water.

c. Insert the drain hose into the drain port. The water can be continuously drained through the hose to the floor or a bucket.

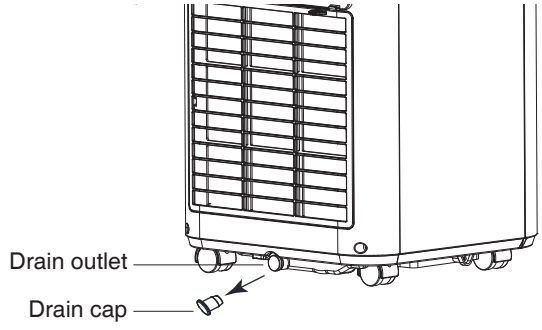

NOTE: Please be sure that the height of the section of the drain hose should not higher than the drain outlet, or the water tank may not be drained.

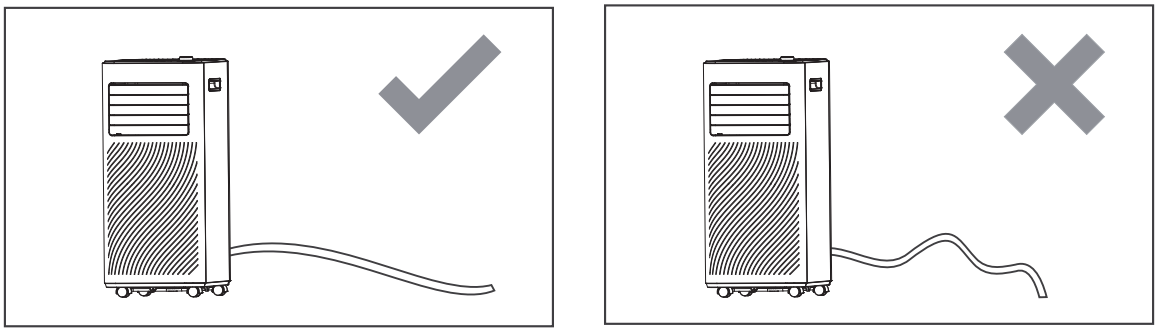

Tips for Correct Use

Follow these tips to get the best performance of your appliance:

- Close the windows and doors in the room to be cooling. When installing the appliance semi-permanently, you should leave a door slightly open (as little as 0.4 inches / 1 cm) to guarantee correct ventilation.
- Close the windows and doors in the room to be cooled. Protect the room from direct exposure to the sun by partially closing the curtains and blinds to make the appliance run more efficiently.
- Never set or rest objects of any kind on the appliance.
- Do not block the air inlet or outlet of the appliance. Reduced airflow will result in poor performance and could damage the unit.
- Make sure there are no heat sources in the room.
- Never use the appliance in very damp rooms (for example laundries).
- Never use the appliance outdoors.
- Make sure the appliance is standing on a level surface.

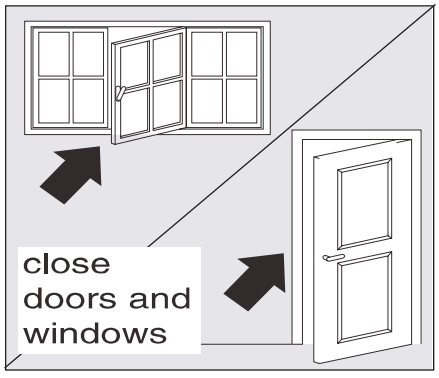

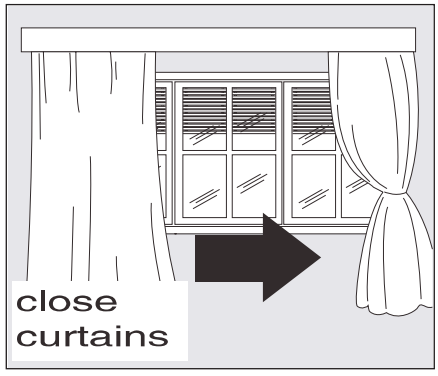

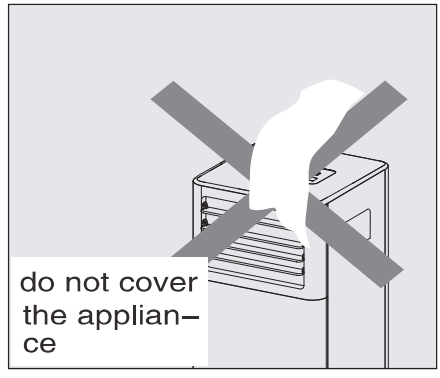

CLEANING

Before cleaning or maintenance, turn the appliance off and wait for a few minutes, then unplug from the electrical outlet.

Cleaning the Outer Case

You should clean the appliance with a slightly damp cloth then dry with a dry cloth.

- Never wash the appliance with water. It could be dangerous.
- Never use petrol, alcohol or solvents to clean the appliance.
- Never spray insecticide liquids or similar.

Cleaning the Air Filters

To keep your appliance working efficiently, you should clean the filter every three months.

- The filter can be removed as shown in the picture below.
- Rinse the filter under running water a number of times.
- After the filter has dried completely, replace it back into the air conditioner.

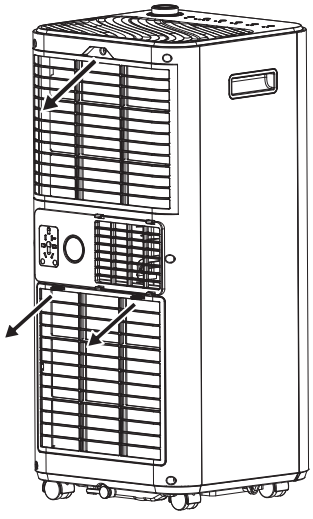

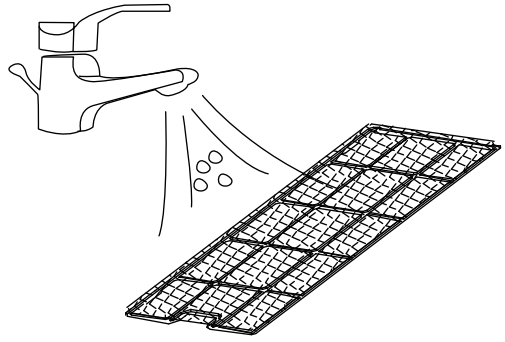

NOTE:

- Do not touch the metal fins in the air conditioner after removing the filter, as they may cause personal injury.
- Do not attempt to dry the filter with a hairdryer or other heating elements as this may deform or ignite the filter.
- Do not operate the air conditioner if the filter is missing.

Maintenance Checklists

Pre-Season Maintenance Checklist

- Check the power cord for any cuts or exposed wiring.
- Check the ground prong is still on your power plug.
- Clean the air filter.
- Check whether the hose adapters and exhaust hose are installed tightly and free of damage.

Post-Season Maintenance Checklist

- Disconnect unit from the power outlet.
- Clean air filter and exterior case.
- Drain any accumulated water from the air conditioner.
- Wrap the air conditioner in plastic to prevent the accumulation of dust.

Long-Term Storage Checklist

- Disconnect unit from the power outlet.
- Clean air filter and exterior case.
- Wrap and/or cover the unit to prevent the accumulation of dust within the unit.
- Do not attempt to dry the filter with a hairdryer or other heating elements as this may deform or ignite the filter.
- Do not operate the air conditioner if the air filter is missing.

TROUBLESHOOTING

Troubleshoot your problem by using the chart below. If the air conditioner still does not work properly, please contact TURBRO customer team via **support@turbro.com**.

ISSUE	POSSIBLE CAUSE	POSSIBLE REMEDY
Does not start when pressing the power button	Didn't plug into the electrical outlet.	A. Plug into the required wall outlet. B. Wait for 30 minutes, if the problem can't be solved, contact the TURBRO customer service team.
Unit stops running	A. Room temperature is lower than the set temperature (cooling mode). B. "FL" appears on the display screen. C. The unit is defrosting.	A. Reset the temperature. B. Drain the water tank (Refer to "Water Drainage Methods". C. After defrosting is finished, the unit will resume operation.
No air is blowing from the air conditioner	A. The air exhaust hose is bent. B. Air outlet / inlet is blocked.	A. Position the air exhaust hose correctly and avoid any sharp bends and sags. B. Check and remove the obstacles blocking the air outlet/inlet.
Not cool enough	A. The windows, doors and / or curtains are not closed. B. There are heat sources inside the room (oven, hairdryer, etc.) C. The air exhaust hose is not connected or blocked. D. The temperature is set too high. E. Air filter is blocked by dust. F. The unit will take about 3 minutes of operation before cooling occurs.	A. Make sure all the doors, windows and curtains are closed (Refer to 'Tips for Correct Use'). B. Remove the heat sources if possible. C. Connect the air exhaust hoe and make sure it can function properly (Refer to 'Installing the Air Exhaust Hose'). D. Set a lower temperature. E. Clean the air filter (Refer to 'Cleaning the Air Filters'). F. Wait for 3 minutes until the compressor safety device delayed process has passed.
Noisy or vibration	The unit is placed on a not level or flat floor or surface.	Place the unit on a flat, level surface if possible.
Produces a gurgling sound	Has the unit just been turned on or off?	The flowing water sound is the refrigerant inside the air conditioner, which is completely normal

ISSUE	POSSIBLE CAUSE	POSSIBLE REMEDY
Produces an unpleasant smell	Air filter clogged	Clean the air filter (Refer to 'Cleaning the Air Filters')
E0, E1, E2, E3, F L displays on the screen	The unit has a self-diagnosis system to identify a number of malfunctions.	Refer to the 'Self-Diagnosis'

If you notice or experience any of the following conditions, please turn off the air conditioner, disconnect from power, discontinue use, and contact support immediately.

- The power cord is overheating or otherwise damaged
- Abnormal sound during operation
- A strange odor is emitted from the unit
- Excessive water leakage the unit

Do not attempt to repair or retrofit the air conditioner by yourself. All repairs must be performed by qualified individuals.

WARRANTY & CUSTOMER SUPPORT

WARRANTY

TURBRO provides a 1-year limited warranty for TURBRO products from the date of purchase, subject to the following conditions and limitations outlined below.

What is covered?

- This warranty is limited to the repair or replacement of part(s) proved to be defective in material or workmanship, after said defect is confirmed by the manufacturer's inspection.
- The manufacturer may, at its discretion, fully discharge all obligations with respect to this warranty by refunding the wholesale price of the defective part(s).

What is not covered?

- Damage caused by the owner when attempting to fix or alter the product themselves.
- Damage caused by misuse, abuse, neglect, alterations, or unauthorized repair.
- Natural depreciation.
- Any alteration misuse of the product will nullify this warranty.
- This warranty is non-transferable, which is effective for the original buyer from the authorized seller only.

How to request warranty services?

- To obtain the benefit of this warranty, please leave a message online (www.turbro.com/contact), or send an email to support@turbro.com.

What will TURBRO do?

- Repair the item.
- Replace the item if not repairable.
- Refund the item under certain circumstances.

CUSTOMER SUPPORT

We are here to help anytime!

Any problems, write to us via support@turbro.com. We will get back to you within 1 business day.

TURBRO

www.turbro.com

TURBRO

© Katmai Technology Limited

support@turbro.com
www.turbro.com
(323) 438-3334

PAP 22