Installation Manual

Installation and Appliance Setup

***CAUTION! Risk of Fire! DO NOT** store instruction manuals inside fireplace cavity. High temperatures could cause a fire.*

INSTALLER: Leave this manual with the appliance, not inside the appliance.
CONSUMER: Retain this manual for future reference. Do not store inside the appliance.

***NOTICE: DO NOT** discard this manual!*

MAJESTIC

Models:

JADE32IN-B
JADE42IN-B
JADE42IL-B

GAS-FIRED
C UL US
LISTED

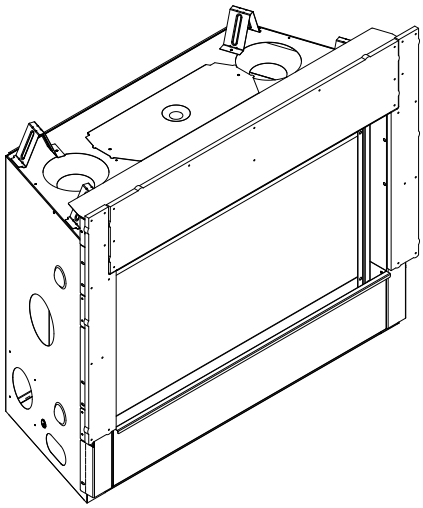

This appliance may be installed as an OEM installation in manufactured home (USA only) or mobile home and must be installed in accordance with the manufacturer's instructions and the *Manufactured Home Construction and Safety Standard, Title 24 CFR, Part 3280* in the United States, or the *Standard for Installation in Mobile Homes, CAN/CSA Z240 MH Series,* in Canada.

This appliance is only for use with the type(s) of gas indicated on the rating plate. This appliance is not convertible for use with other gases, unless a certified kit is used.

⚠ WARNING:
FIRE OR EXPLOSION HAZARD
Failure to follow safety warnings exactly could result in serious injury, death, or property damage.

- **DO NOT** store or use gasoline or other flammable vapors and liquids in the vicinity of this or any other appliance.
- **What to do if you smell gas**
  - **DO NOT** try to light any appliance.
  - **DO NOT** touch any electrical switch. **DO NOT** use any phone in your building.
  - Leave the building immediately.
  - Immediately call your gas supplier from a neighbor's phone. Follow the gas supplier's instructions.
  - If you cannot reach your gas supplier, call the fire department.
- Installation and service must be performed by a qualified installer, service agency, or the gas supplier.

⚠ DANGER

HOT GLASS WILL CAUSE BURNS.

DO NOT TOUCH GLASS UNTIL COOLED.

NEVER ALLOW CHILDREN TO TOUCH GLASS.

A barrier designed to reduce the risk of burns from the hot viewing glass is provided with this appliance and must be installed for the protection of children and other at-risk individuals.

Decorative barrier front must be ordered separately at time of appliance purchase. See Section 3.A.

⚠ Safety Alert Key:

- ***DANGER!*** *Indicates a hazardous situation which, if not avoided will result in death or serious injury.*
- ***WARNING!*** *Indicates a hazardous situation which, if not avoided could result in death or serious injury.*
- ***CAUTION!*** *Indicates a hazardous situation which, if not avoided, could result in minor or moderate injury.*
- ***NOTICE:*** *Used to address practices not related to personal injury.*

Note: *The term "recommend" or "recommended" does not indicate a requirement. It is a best practice suggested by Hearth & Home Technologies®.*

Table of Contents

Installation Standard Work Checklist 3

1 Product Specific and Important Safety Information

A. Appliance Certification 4
B. Glass Specifications 4
C. BTU Specifications 4
D. High Altitude Installations 4
E. Non-Combustible Materials Specification 5
F. Combustible Materials Specification 5
G. Electrical Codes 5
H. California 5
I. Requirements for the Commonwealth of Massachusetts . . 6

2 Getting Started

A. Design and Installation Considerations 7
B. Good Faith Wall Surface 7
C. Tools and Supplies Needed 8
D. Inspect Appliance and Components 8

3 Framing and Clearances

A. Appliance/Decorative Barrier Front Dimension Diagrams . 9
B. Appliance Location and Clearances to Combustibles . . . 13
C. Constructing the Appliance Chase 19
D. Floor Protection 19

4 Termination Location and Vent Information

A. Approved Pipe 20
B. Vent Termination Minimum Clearances 20
C. Vent Terminal Clearances 22
D. Use of Elbows 23
E. Use of Flex Vent (SLP-FLEX Series 6-5/8 Inch) 25
F. Vent Diagrams 26

5 Vent Clearances and Vent Framing

A. Vent Clearances to Combustibles 38
B. Wall Penetration Framing/Firestops 38
C. Ceiling Firestop/Floor Penetration Framing 39
D. Install Attic Insulation Shield 39

6 Appliance Preparation

A. Vent Collar Preparation 40
B. Prepare For Heat Management 41
C. Securing and Leveling the Appliance 42
D. Non-Combustible Material Installation 43
E. Auxiliary Hanging Bracket Installation 43

7 Venting

A . Assemble Vent Sections (SLP Only) 44
B. Assemble Slip Sections 45
C. Secure the Vent Sections 45
D. Disassemble Vent Sections 46
E. Vertical Termination Requirements 47
F. Horizontal Termination Requirements 48

8 Electrical Information

A. General Information 49
B. Wiring Requirements 50

9 Gas Information

A. Fuel Conversion 55
B. Gas Pressure 55
C. Gas Connection 57
D. High Altitude Installations 57
E. Air Shutter Setting 58

10 Finishing

A. Facing Material . . . . . 59 ➔
B. Non-Combustible Board and Drywall Installation . . . . . 60 ➔
C. Mantel and Wall Projections 62
D. Decorative Barrier Front Dimensions for Finishing 64

11 Appliance Setup

A. Remove the Shipping Materials 68
B. Clean the Appliance 68
C. Install the Glass Refractory (Optional) 68
D. Install LED Lights (Optional) 68
E. Install Stones (Optional) 68
F. Install Log Sets (Optional) 68
G. Install Media 68
H. IntelliFire Touch® Control System Setup 69
I. Fixed Glass Assembly Removal and Replacement 69
J. Install Decorative Barrier Front 70

12 Reference Materials

A. Vent Components Diagrams 71
B. Accessories 79

➔ = Contains updated information.

ATTENTION INSTALLER:
Follow this Standard Work Checklist

This standard work checklist is to be used by the installer in conjunction with, not instead of, the instructions contained in this installation manual.

Customer: _____ **Date Installed:** _____
Lot/Address: _____ **Location of Fireplace:** _____
_____ **Installer:** _____
Model (circle one): **JADE32IN-B** **JADE42IN-B** **JADE42IL-B** **Dealer/Distributor Phone #** _____
Serial #: _____

WARNING! Risk of Fire or Explosion! *Failure to install appliance according to these instructions could lead to a fire or explosion. Install ONLY components and accessories approved by Hearth & Home Technologies. Unapproved components and accessories could cause fireplace to overheat.*

Appliance Install	**YES**	**IF NO, WHY?**
Verified that the chase is insulated and sealed. (Pg. 19)	☐	_____
Required non-combustible board is installed. (Pg. 43)	☐	_____
Verified clearances to combustibles. (Pg. 13-18)	☐	_____
Fireplace is leveled and secured. (Pg. 42)	☐	_____
Optional Heat Management System and/or Power Vent installed correctly.	☐	_____
Venting/Chimney Sections 4, 5 and 7		
Venting configuration complies to vent diagrams.	☐	_____
Venting installed, locked and secured in place with proper clearance. (May need to order separately.)	☐	_____
Firestops installed.	☐	_____
Attic insulation shield installed.	☐	_____
Exterior wall/Roof flashing installed and sealed.	☐	_____
Terminations installed and sealed.	☐	_____
Electrical Section 8 (Pg 49-54)		
Unswitched power (110-120 VAC) provided to the appliance.	☐	_____
Switch wires properly installed.	☐	_____
Gas Section 9 (Pg 55-58)		
Proper appliance for fuel type.	☐	_____
Was a conversion performed?	☐	_____
Leak check performed and inlet pressure verified.	☐	_____
Verified proper air shutter setting for installation type.	☐	_____
Finishing Section 10 (Pg 59-67)		
Combustible materials not installed in non-combustible areas.	☐	_____
Verified all clearances meet installation manual requirements.	☐	_____
Mantels and wall projections comply with installation manual requirements.	☐	_____
Appliance Setup Section 11 (Pg 68-70)		
All packaging and protective materials removed (inside & outside of appliance).	☐	_____
Refractories, logs, media and embers installed correctly.	☐	_____
Glass assembly installed and secured.	☐	_____
Accessories installed properly.	☐	_____
Mesh, decorative barrier front properly installed. (May need to order separately.)	☐	_____
Manual bag and all of its contents are removed from inside/under the appliance and given to party responsible for use and operation.	☐	_____
Started appliance and verified no gas leaks exist.	☐	_____

Hearth & Home Technologies recommends the following:

- Photographing the installation and copying this checklist for your file.
- That this checklist remain visible at all times on the appliance until the installation is complete.

Comments: Further description of the issues, who is responsible (Installer/ Builder/ Other Trades, etc) and corrective action needed _____

_____

_____

Comments Communicated to party responsible _____ by _____ on _____
(Builder / Gen. Contractor/) (Installer) (Date)

➔ = Contains updated information.

2619-988 Rev. B 7/20

1 Product Specific and Important Safety Information

A. Appliance Certification

MODELS: **JADE42IN-B, JADE42IL-B, JADE32IN-B**
LABORATORY: **Underwriters Laboratories, Inc. (UL)**
TYPE: **Direct Vent Heater**
STANDARD: **CSA / ANSI Z21.88-2019 • CSA 2.33-2019**

This product is listed to ANSI standards for "Vented Gas Fireplace Heaters" and applicable sections of "Gas Burning Heating Appliances for Manufactured Homes and Recreational Vehicles", and "Gas Fired Appliances for Use at High Altitudes". Also Certified for Installation in a Bedroom or a Bedsitting Room.

NOTICE: *This installation must conform with local codes. In the absence of local codes you must comply with the National Fuel Gas Code, ANSI Z223.1-latest edition in the U.S.A. and the CAN/CGA B149 Installation Codes in Canada.*

NOT INTENDED FOR USE AS A PRIMARY HEAT SOURCE. This appliance is tested and approved as either supplemental room heat or as a decorative appliance. It should not be factored as primary heat in residential heating calculations.

B. Glass Specifications

Hearth & Home Technologies appliances manufactured with tempered glass may be installed in hazardous locations such as bathtub enclosures as defined by the Consumer Product Safety Commission (CPSC). The tempered glass has been tested and certified to the requirements of **ANSI Z97.1** and **CPSC 16 CFR 1202** (Safety Glazing Certification Council **SGCC# 1595** and **1597**. Architectural Testing, Inc. Reports **02-31919.01** and **02-31917.01**).

This statement is in compliance with **CPSC 16 CFR Section 1201.5** "Certification and labeling requirements" which refers to **15** U.S. Code **(USC) 2063** stating "…Such certificate shall accompany the product or shall otherwise be furnished to any distributor or retailer to whom the product is delivered."

Some local building codes require the use of tempered glass with permanent marking in such locations. Glass meeting this requirement is available from the factory. Please contact your dealer or distributor to order.

C. BTU Specifications

Models *(U.S. or Canada)*		Maximum Input BTU/h	Minimum Input BTU/h	Orifice Size (DMS)
JADE42IN-B (NG)	*(0-2000 FT)*	25,250	17,500	#42
JADE42IL-B (PROPANE)	*(0-2000 FT)*	23,500	17,500	.057
JADE32IN-B (NG)	*(0-2000 FT)*	19,000	13,250	#45
JADE32IN-B (PROPANE)	*(0-2000 FT)*	16,500	12,750	1.25 mm

D. High Altitude Installations

NOTICE: *If the heating value of the gas has been reduced, these rules do not apply. Check with your local gas utility or authorities having jurisdiction.*

When installing above 2000 feet elevation:

- In the USA: Reduce input rate 4% for each 1000 feet above 2000 feet.
- In CANADA: Input ratings are certified without a reduction of input rate for elevations up to 4500 feet (1370 m) above sea level. Please consult provincial and/or local authorities having jurisdiction for installations at elevations above 4500 feet (1370 m).

Check with your local gas utility to determine proper orifice size.

E. Non-Combustible Materials Specification

Material which will not ignite and burn. Such materials are those consisting entirely of steel, iron, brick, tile, concrete, slate, glass or plasters, or any combination thereof.

Materials that are reported as passing **ASTM E 136, Standard Test Method for Behavior of Materials in a Vertical Tube Furnace at 750 ºC** shall be considered non-combustible materials.

F. Combustible Materials Specification

Materials made of or surfaced with wood, compressed paper, plant fibers, plastics, or other material that can ignite and burn, whether flame proofed or not, or plastered or unplastered shall be considered combustible materials.

G. Electrical Codes

NOTICE: *This appliance must be electrically wired and grounded in accordance with local codes or, in the absence of local codes, with* **National Electric Code ANSI/NFPA 70-latest edition** *or the* **Canadian Electric Code CSA C22.1.**

- A 110-120 VAC circuit for this product must be protected with ground-fault circuit interrupter protection, in compliance with the applicable electrical codes, when it is installed in locations such as in bathrooms or near sinks.

H. California

WARNING: This product and the fuels used to operate this product (liquid propane or natural gas), and the products of combustion of such fuels, can expose you to chemicals including benzene, which is known to the State of California to cause cancer and reproductive harm. For more information go to: www.P65Warnings.ca.gov.

Note: The following requirements reference various Massachusetts and national codes not contained in this document.

I. Requirements for the Commonwealth of Massachusetts

For all side wall horizontally vented gas fueled equipment installed in every dwelling, building or structure used in whole or in part for residential purposes, including those owned or operated by the Commonwealth and where the side wall exhaust vent termination is less than seven (7) feet above finished grade in the area of the venting, including but not limited to decks and porches, the following requirements shall be satisfied:

Installation of Carbon Monoxide Detectors

At the time of installation of the side wall horizontal vented gas fueled equipment, the installing plumber or gas fitter shall observe that a hard wired carbon monoxide detector with an alarm and battery back-up is installed on the floor level where the gas equipment is to be installed. In addition, the installing plumber or gas fitter shall observe that a battery operated or hard wired carbon monoxide detector with an alarm is installed on each additional level of the dwelling, building or structure served by the side wall horizontal vented gas fueled equipment. It shall be the responsibility of the property owner to secure the services of qualified licensed professionals for the installation of hard wired carbon monoxide detectors.

In the event that the side wall horizontally vented gas fueled equipment is installed in a crawl space or an attic, the hard wired carbon monoxide detector with alarm and battery back-up may be installed on the next adjacent floor level.
In the event that the requirements of this subdivision can not be met at the time of completion of installation, the owner shall have a period of thirty (30) days to comply with the above requirements; provided, however, that during said thirty (30) day period, a battery operated carbon monoxide detector with an alarm shall be installed.

Approved Carbon Monoxide Detectors

Each carbon monoxide detector as required in accordance with the above provisions shall comply with NFPA 720 and be ANSI/UL 2034 listed and IAS certified.

Signage

A metal or plastic identification plate shall be permanently mounted to the exterior of the building at a minimum height of eight (8) feet above grade directly in line with the exhaust vent terminal for the horizontally vented gas fueled heating appliance or equipment. The sign shall read, in print size no less than one-half (1/2) in. in size, **"GAS VENT DIRECTLY BELOW. KEEP CLEAR OF ALL OBSTRUCTIONS".**

Inspection

The state or local gas inspector of the side wall horizontally vented gas fueled equipment shall not approve the installation unless, upon inspection, the inspector observes carbon monoxide detectors and signage installed in accordance with the provisions of 248 CMR 5.08(2)(a)1 through 4.

Exemptions

The following equipment is exempt from 248 CMR 5.08(2)(a)1 through 4:

- The equipment listed in Chapter 10 entitled "Equipment Not Required To Be Vented" in the most current edition of NFPA 54 as adopted by the Board; and
- Product Approved side wall horizontally vented gas fueled equipment installed in a room or structure separate from the dwelling, building or structure used in whole or in part for residential purposes.

MANUFACTURER REQUIREMENTS

Gas Equipment Venting System Provided

When the manufacturer of Product Approved side wall horizontally vented gas equipment provides a venting system design or venting system components with the equipment, the instructions provided by the manufacturer for installation of the equipment and the venting system shall include:

- Detailed instructions for the installation of the venting system design or the venting system components; and
- A complete parts list for the venting system design or venting system.

Gas Equipment Venting System NOT Provided

When the manufacturer of a Product Approved side wall horizontally vented gas fueled equipment does not provide the parts for venting the flue gases, but identifies "special venting systems", the following requirements shall be satisfied by the manufacturer:

- The referenced "special venting system" instructions shall be included with the appliance or equipment installation instructions; and
- The "special venting systems" shall be Product Approved by the Board, and the instructions for that system shall include a parts list and detailed installation instructions.

A copy of all installation instructions for all Product Approved side wall horizontally vented gas fueled equipment, all venting instructions, all parts lists for venting instructions, and/or all venting design instructions shall remain with the appliance or equipment at the completion of the installation.

See Gas Connection section for additional Commonwealth of Massachusetts requirements.

2 Getting Started

A. Design and Installation Considerations

WARNING! Risk of Fire or Explosion! *Read all instructions before starting the installation.*

Majestic direct vent gas appliances are designed to operate with all combustion air siphoned from outside of the building and all exhaust gases expelled to the outside. No additional outside air source is required.

Installation MUST comply with local, regional, state and national codes and regulations. Consult insurance carrier, local building inspector, fire officials or authorities having jurisdiction over restrictions, installation inspection and permits.

Before installing, determine the following:

- Where the appliance is to be installed.
- The vent system configuration to be used. If Passive Heat will be installed, consider location of discharge opening in relation to venting and other construction materials.
- Gas supply piping requirements.
- Provisions for optional heat management system.
- Electrical wiring requirements.
- Framing and finishing details.
- Whether optional accessories—devices such as a fan, wall switch, or remote control—are desired.

Installation and service of this appliance should be performed by qualified personnel. Hearth & Home Technologies recommends HHT Factory Trained or NFI certified professionals.

hearthED FACTORY TRAINING Fuel Your Fire

NFI NATIONAL FIREPLACE INSTITUTE A CERTIFICATION AGENCY

Improper installation, adjustment, alteration, service or maintenance can cause injury or property damage. For assistance or additional information, consult a qualified service technician, service agency or your dealer.

B. Good Faith Wall Surface

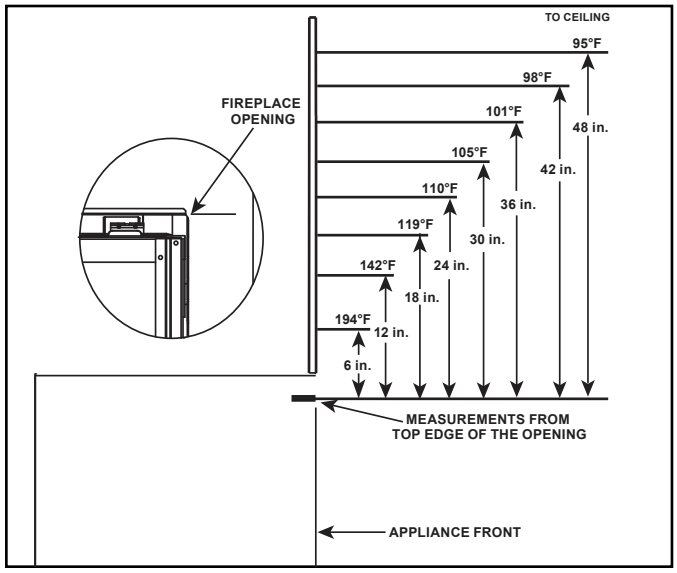

Figure 2.1 Good Faith Wall Surface Temperatures Above Appliance

If installing a television (TV) above the appliance, see Section 3 of the appliance Owner's Manual.

NOTICE: *Surface temperatures listed above are taken with a temperature measuring probe as prescribed by the test standard used for appliance certification. Temperatures on walls or mantels taken with an infrared thermometer may yield increased temperatures of up to 30 °F (17 °C) or more depending on the thermometer settings and material characteristics being measured. Use appropriate finishing materials that are able to withstand these conditions. For additional finishing guidelines, see Section 10.*

C. Tools and Supplies Needed

Before beginning the installation be sure that the following tools and building supplies are available.

Hand Tools	Tape measure
Level	Framing material
Manometer	Framing square
Voltmeter	Electric drill and bits (1/4 in.)
Plumb line	Safety glasses/Gloves
Wrenches	Reciprocating saw

1/4 in. nut driver

Non-corrosive leak check solution

1/2 - 3/4 in. length, #6 or #8 Self-drilling screws

Caulking material (300 ºF minimum continuous exposure rating)

D. Inspect Appliance and Components

WARNING! Risk of Fire or Explosion! *Damaged parts could impair safe operation.* ***DO NOT i****nstall damaged, incomplete or substitute components. Keep appliance dry.*

WARNING! Risk of Fire, Explosion or Electric Shock! DO NOT *use this appliance if any part has been under water. Call a qualified service technician to inspect the appliance and to replace any part of the control system and/or gas control which has been under water.*

- Carefully remove the appliance and components from the packaging.
- The vent system components and decorative barrier fronts may be shipped in separate packages.
- If packaged separately, the log set and appliance grate must be installed.
- Report to your dealer any parts damaged in shipment.

Hearth & Home Technologies disclaims any responsibility for, and the warranty will be voided by, the following actions:

- Installation and use of any damaged appliance or vent system component.
- Modification of the appliance or vent system.
- Installation other than as instructed by Hearth & Home Technologies.
- Improper positioning of the logs/media (as applicable) or the glass assembly.
- Installation and/or use of any component part not approved by Hearth & Home Technologies.

3 Framing and Clearances

A. Appliance/Decorative Barrier Front Dimension Diagrams

Dimensions are actual appliance dimensions. Use for reference only. For framing dimensions and clearances refer to Section 5.

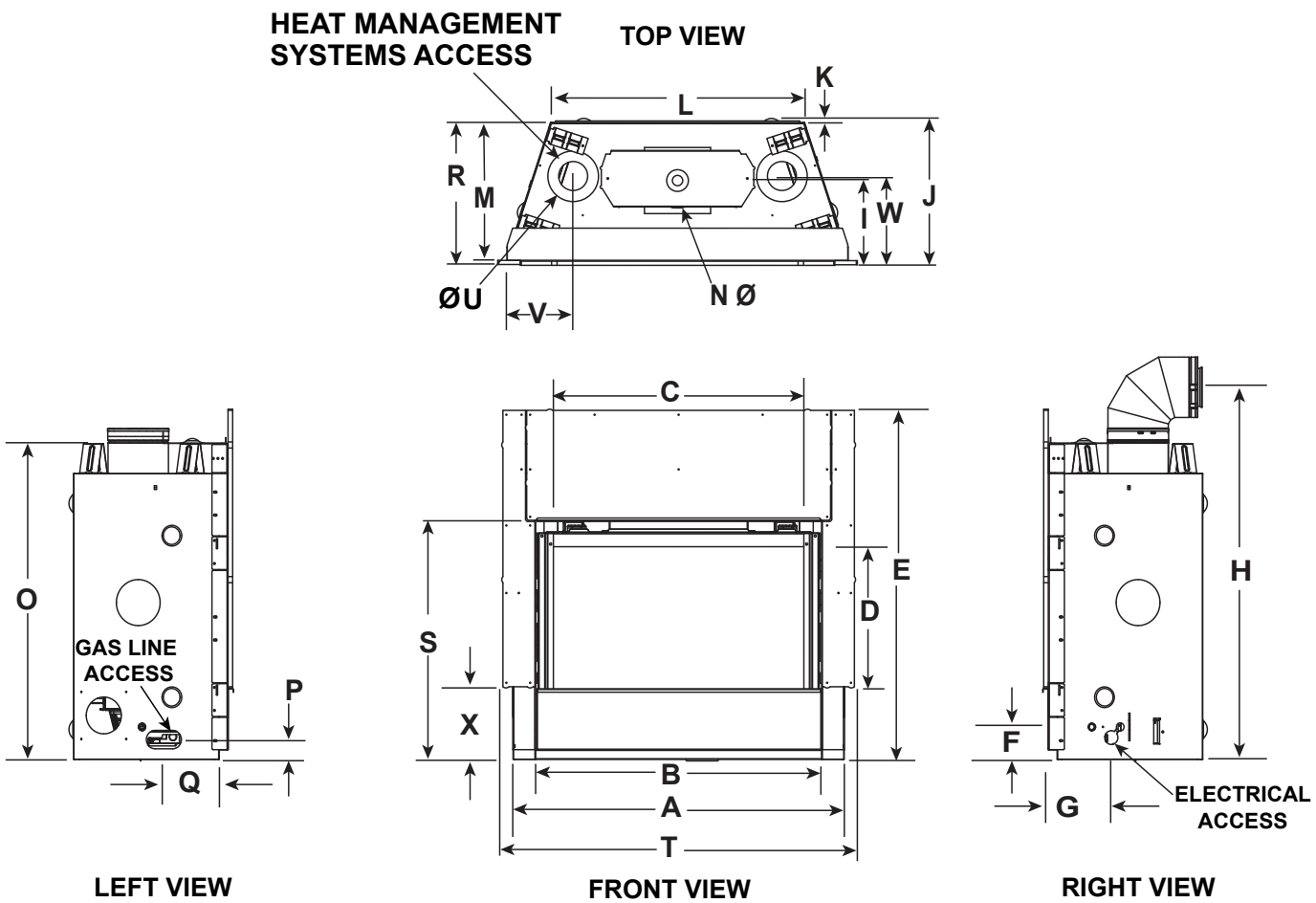

Appliance Dimensions Table

Location	Inches	Millimeters
A	36	914
B	31	787
C	27-1/4	692
D	15-1/4	387
E	38-1/16	967
F	3-1/2	89
G	7	178
H	40-1/2	1029
I	9-13/16	249
J	17-3/4	451
K	1/2	13
L	25-3/4	654

Location	Inches	Millimeters
M	16-3/4	425
N	6-5/8	168
O	34-3/8	873
P	2-3/16	56
Q	6	152
R	17-1/4	438
S	25-7/8	657
T	38-1/2	978
U	6-1/8	156
V	7-1/2	191
W	10-3/8	264
X	7-3/4	197

Figure 3.1 Appliance Dimensions - JADE32IN-B

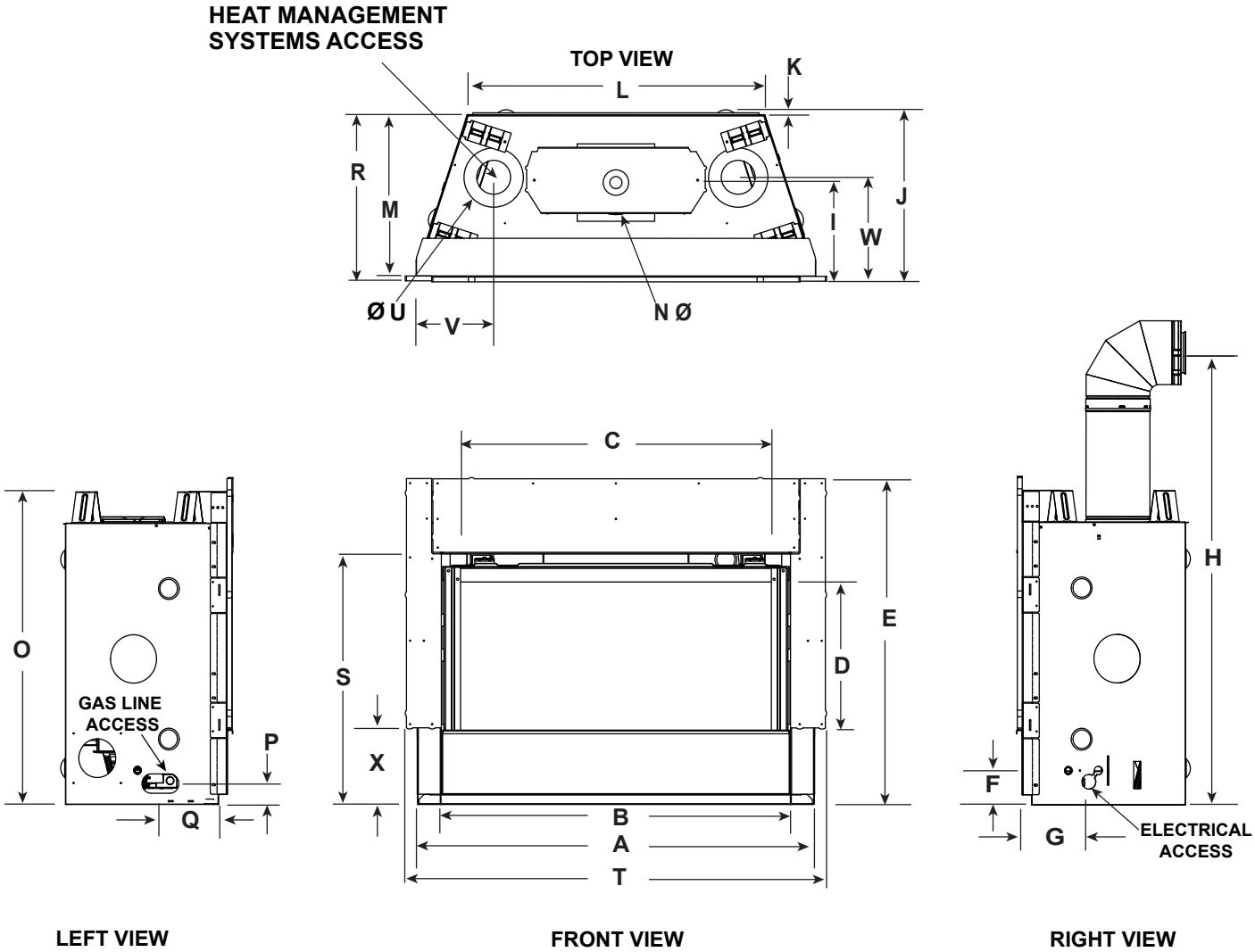

Appliance Dimensions Table

Location	Inches	Millimeters
A	48	1219
B	43	1092
C	39-1/16	993
D	15-1/4	387
E	33-11/16	856
F	3-1/2	89
G	7	178
H	46-1/2	1181
I	9-13/16	249
J	17-3/4	451
K	1/2	13
L	37-3/4	959

Location	Inches	Millimeters
M	16-3/4	425
N	6-5/8	168
O	32-3/8	822
P	2-3/16	56
Q	6	152
R	17-1/4	438
S	25-7/8	657
T	50-1/2	1283
U	6-1/8	156
V	7-1/2	191
W	10-3/8	264
X	7-3/4	197

Figure 3.2 Appliance Dimensions - JADE42IN-B, JADE42IL-B

CFTF DECORATIVE BARRIER FRONTS

Dimensions are actual decorative barrier front dimensions. Use for reference only.

IMPORTANT! This fireplace requires an installed decorative barrier front to prevent direct contact with the hot viewing glass. DO NOT operate the fireplace with the barrier removed.

Decorative barrier front must be ordered at time of fireplace purchase. If decorative barrier front is not present, contact dealer.

Note: See Section 10 for hearth, mantel and finishing requirements.

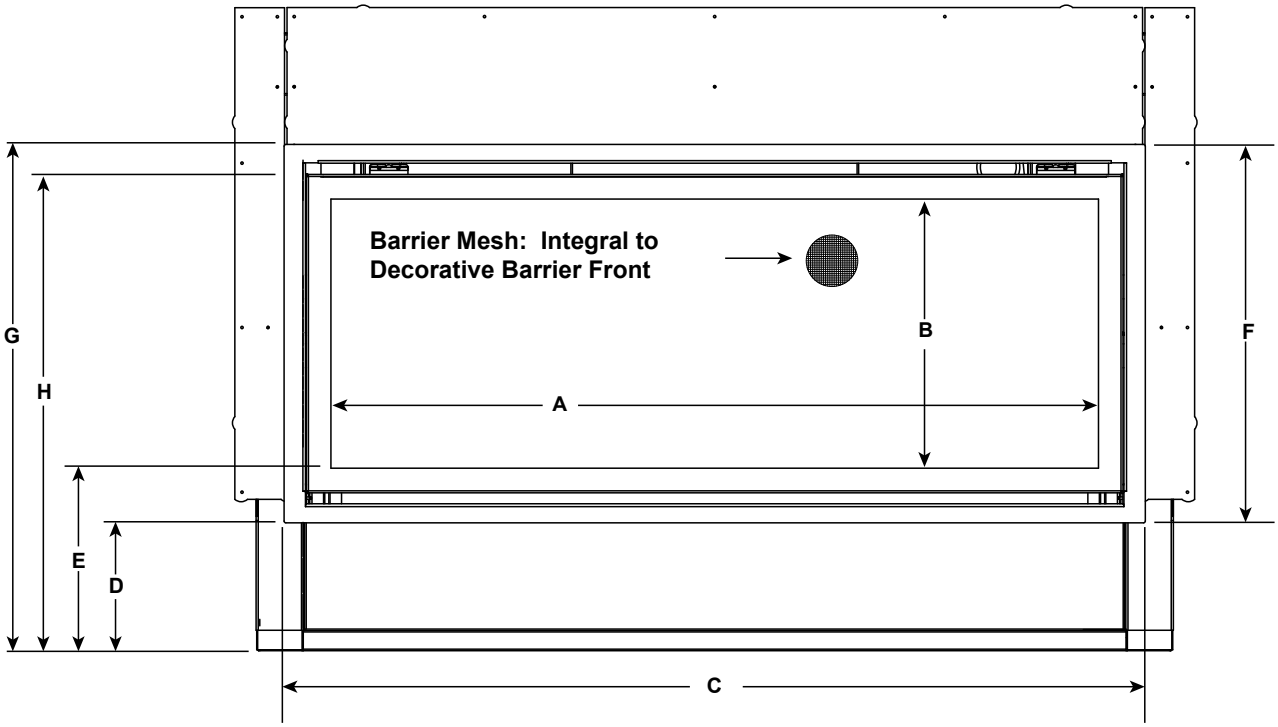

			A	B	C	D	E	F	G	H
JADE32IN-B	CFTF-32	in.	28-3/16	14-1/8	33-1/8	6-7/8	9-13/16	19-7/8	26-7/8	25-1/8
		mm	716	359	841	175	249	505	683	638
JADE42IN-B JADE42IL-B	CFTF-42	in.	40-3/16	14-1/8	45-1/8	6-7/8	9-13/16	19-7/8	26-7/8	25-3/16
		mm	1021	359	1146	175	249	505	683	640

Figure 3.3 Decorative Barrier Front Dimensions - CFTF

PFF DECORATIVE FRONTS

IMPORTANT! This fireplace requires an installed decorative barrier front to prevent direct contact with the hot viewing glass. DO NOT operate the fireplace with the barrier removed.

Decorative barrier front must be ordered at time of fireplace purchase. If decorative barrier front is not present, contact dealer.

Note: See Section 10 for hearth, mantel and finishing requirements.

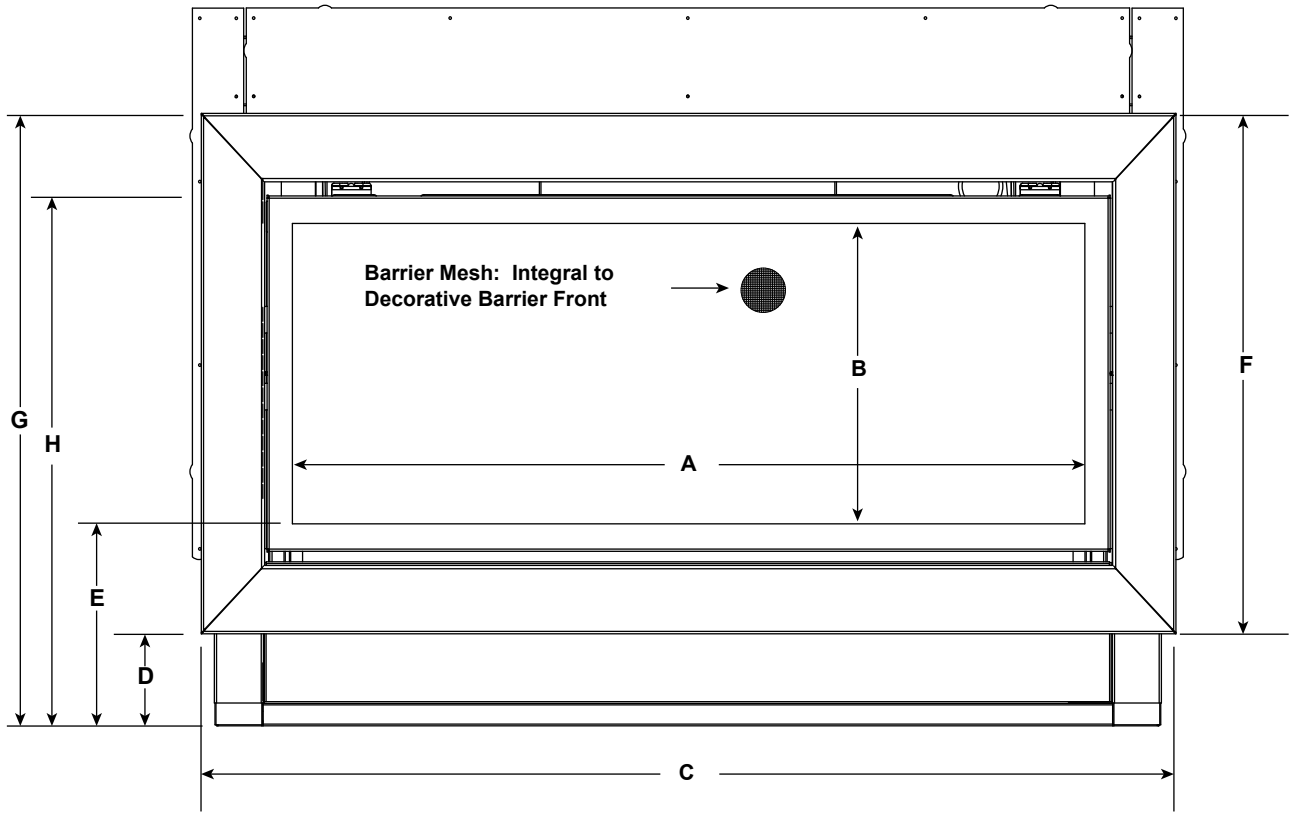

			A	B	C	D	E	F	G	H
JADE32IN-B	PFF-32	in.	26-3/16	14-1/8	37-1/2	4-5/8	9-7/8	24-7/16	29-1/8	25-1/8
		mm	665	358	952	117	250	620	739	638
JADE42IN-B JADE42IL-B	PFF-42	in.	40-3/16	14-1/8	49-7/16	4-5/8	9-3/4	24-7/16	29-1/16	25-3/16
		mm	1021	358	1255	117	248	620	737	640

Figure 3.4 Decorative Barrier Front Dimensions - PFF (Picture Frame Front)

B. Appliance Location and Clearances to Combustibles

When selecting a location for the appliance it is important to consider the required clearances to walls and allow sufficient clearance for heat management systems venting. See Figure Figure 3.6.

WARNING! Risk of Fire or Burns! *Provide adequate clearance around air openings and for service access. Due to high temperatures, the appliance should be located out of traffic and away from furniture and draperies.*

NOTICE: *Illustrations reflect typical installations and are FOR DESIGN PURPOSES ONLY. Illustrations/diagrams are not drawn to scale. Actual installation may vary due to individual design preference.*

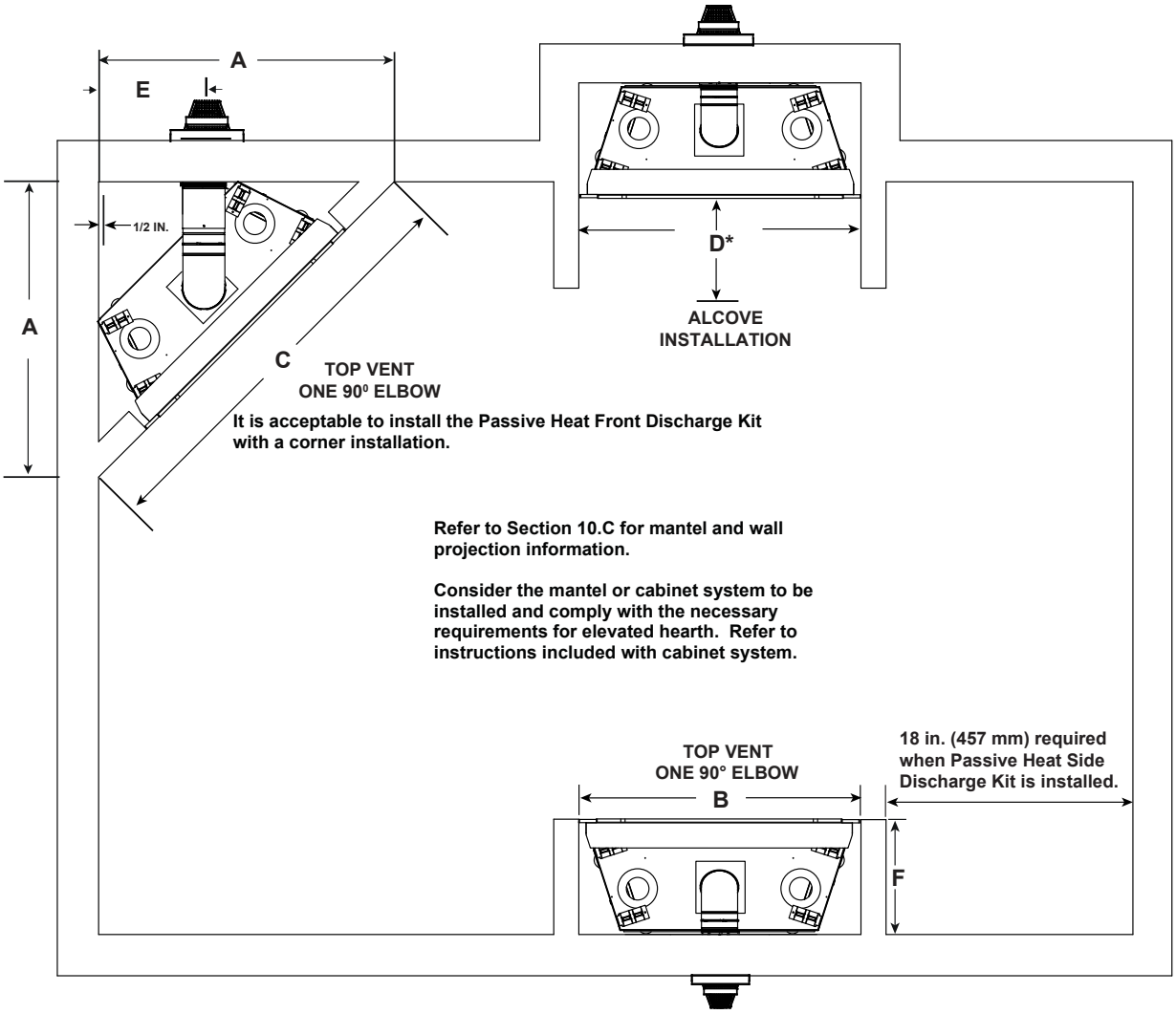

Note: Adjust framing dimensions for interior chase sheathing (such as sheetrock).

		A	B	C	D	E	F
JADE32IN-B	Inches	42-7/8	37	60-5/8	See Section 10.C for Alcove Installation (Mantel and Wall Projection).	14-5/8	17-1/4
	Millimeters	1089	940	1541		371	438
JADE42IN-B JADE42IL-B	Inches	51-3/8	49	72-5/8		18-3/4	17-1/4
	Millimeters	1305	1245	1845		476	438

Figure 3.5 Appliance Locations

Framing

This appliance is designed to be recessed into combustible framing with non-combustible material pre-installed on top and side. Drywall or combustible materials (minimum 1/2 inch thick) are designed to contact the non-combustible material/appliance as called out in Section 10 Finishing.

This appliance has been thoroughly tested to minimize drywall cracking and/or the protrusion of screws “screw pops" when framed as shown below.

Framing should be done in a manner similar to framing a window or door: Double-2x4/2x6 as a header for horizontal strength and utilizing Jack or Trimmer stud fastened to the King studs for vertical strength.

If elevating the appliance, the base of the appliance should also be constructed in a similar manner to prevent settling.

Refer to Figures 3.7, 3.8 and 3.9 for information regarding framing when the Passive Heat Kit is installed. Install the Passive Heat Kit per the instructions provided with the kit.

Note: Refer to Section 10 for important information related to facing, drywall specifications and decorative barrier front information.

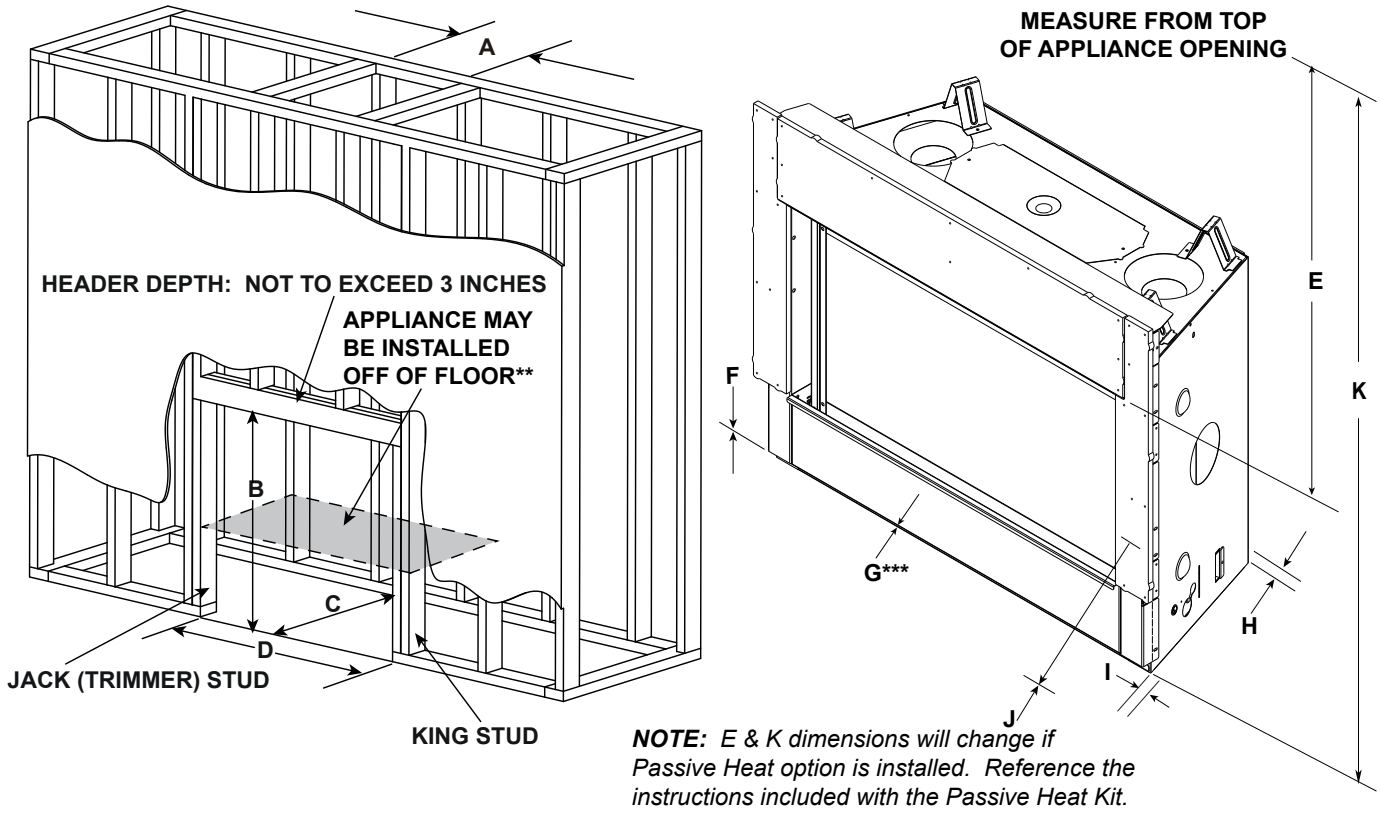

Model Size		MINIMUM FRAMING DIMENSIONS*										
		A	B	C	D	E	F	G***	H	I	J	K
		Rough Opening (Vent Pipe)	Rough Opening (Height)	Rough Opening (Depth)	Rough Opening (Width)	Clearance to Room Ceiling	Combustible Floor	Minimum Hearth Required	Behind Appliance	Sides of Appliance	Front of Appliance	Clearance to Ceiling
32	in.	8-5/8	36-1/2	17-3/4	37	31	0	0	1/2	1/2	36	56-7/8
	mm	219	927	451	940	787	0	0	13	13	914	1445
42	in.	8-5/8	32-3/4	17-3/4	49	31	0	0	1/2	1/2	36	56-7/8
	mm	219	832	451	1245	787	0	0	13	13	914	1445

* Adjust framing dimensions for interior chase sheathing (such as sheetrock).
** If appliance is installed off of floor, maintain required clearances to combustibles. Construct platform in accordance with local building codes.
*** For installation with vinyl flooring, see Section 3.D.

Figure 3.6 Clearances to Combustibles

Framing Dimensions- Passive Heat Front Discharge (PH-LINEAR)

Front Discharge: Air conveyed into the room through one front discharge slot.

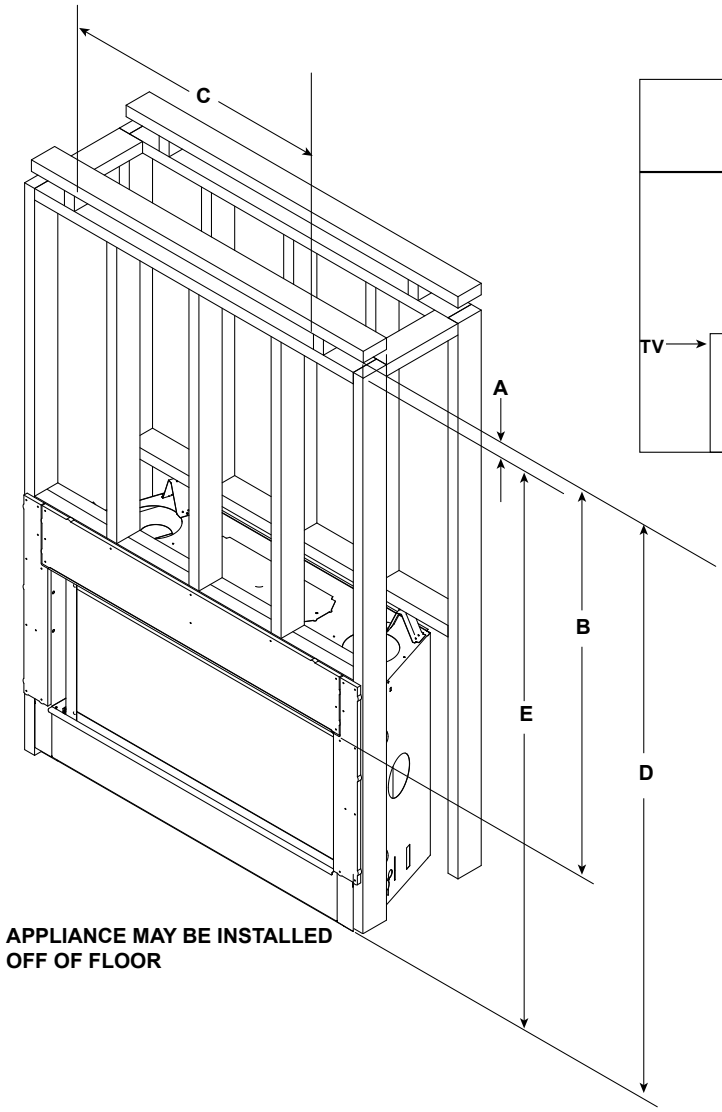

CHASE DETAIL

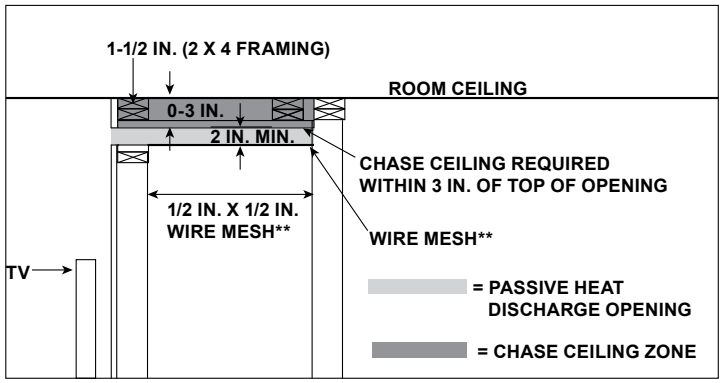

WARNING! Risk of Fire! *Wire mesh required on bottom of discharge opening (Dimension A) when finished discharge opening is greater than 3 inches. Secure mesh to top of framing.*

FRONT DISCHARGE MINIMUM FRAMING DIMENSIONS							
		A		B	C	D	E
		TRIM KIT* INSTALLED (PH-FRTTRIM-XX)	NO TRIM KIT**				
		Required Height of Discharge Opening	Height of Discharge Opening	Clearance to Top of Discharge Opening	Width of Discharge Opening	Clearance to Top of Discharge Opening From Bottom of Appliance	Clearance from Bottom of Appliance to Bottom of Discharge Opening
JADE32IN-B	Inches	3-1/2	2	48	31-1/8	73-7/8	71-7/8
	millimeters	89	51	1219	791	1876	1826
JADE42IN-B JADE42IL-B	Inches	3-1/2	2	48	42-1/2	73-7/8	71-7/8
	millimeters	89	51	1219	1080	1876	1826

*** Measurement for Trim Kit = 3-1/2 in. + Additional Finishing Material Thickness. Figure 3.8 shows vent cover dimensions.**
**** Measurement without Trim Kit = 2 in. + Additional Finishing Material Thickness. If finished discharge opening height is greater than 3 inches, wire mesh is required.**

Figure 3.7 Passive Heat Front Discharge Framing Dimensions With and Without a Trim Kit

Passive Heat Front Discharge (PH-FRTTRIM-XX) Trim Kit

Vent Cover Dimensions

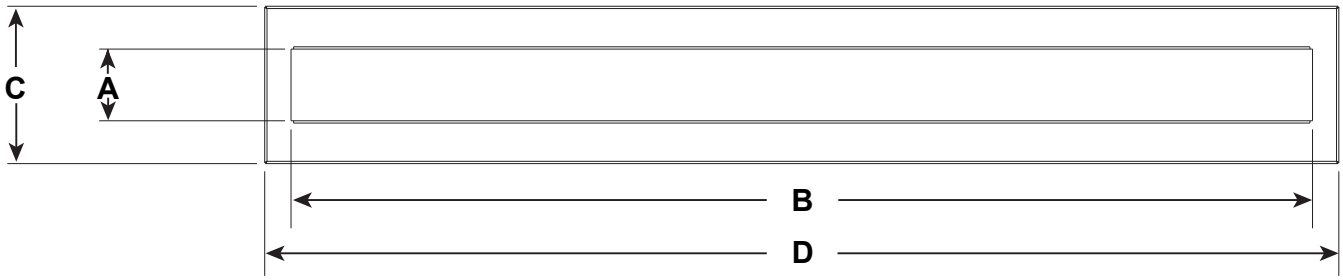

PASSIVE HEAT TRIM KIT DIMENSIONS					
		A	B	C	D
		Inside Height	Inside Width	Outside Height	Outside Width
PH-FRTTRIM-32	Inches	2-9/16	31-1/16	5-5/8	33
	millimeters	65	789	143	838
PH-FRTTRIM-42	Inches	2-9/16	42-1/2	5-5/8	44-3/8
	millimeters	65	1080	143	1127

Figure 3.8 Passive Heat Front Discharge - Vent Cover Dimensions

Framing Dimensions - Passive Heat Side Discharge (PH-LINEAR)

Side Discharge: Air conveyed into the room through two discharge registers, one on each side of appliance.

***WARNING! Risk of Fire! DO NOT** place combustible objects or combustible materials in non-combustible zone. Appliance and combustible materials will overheat.*

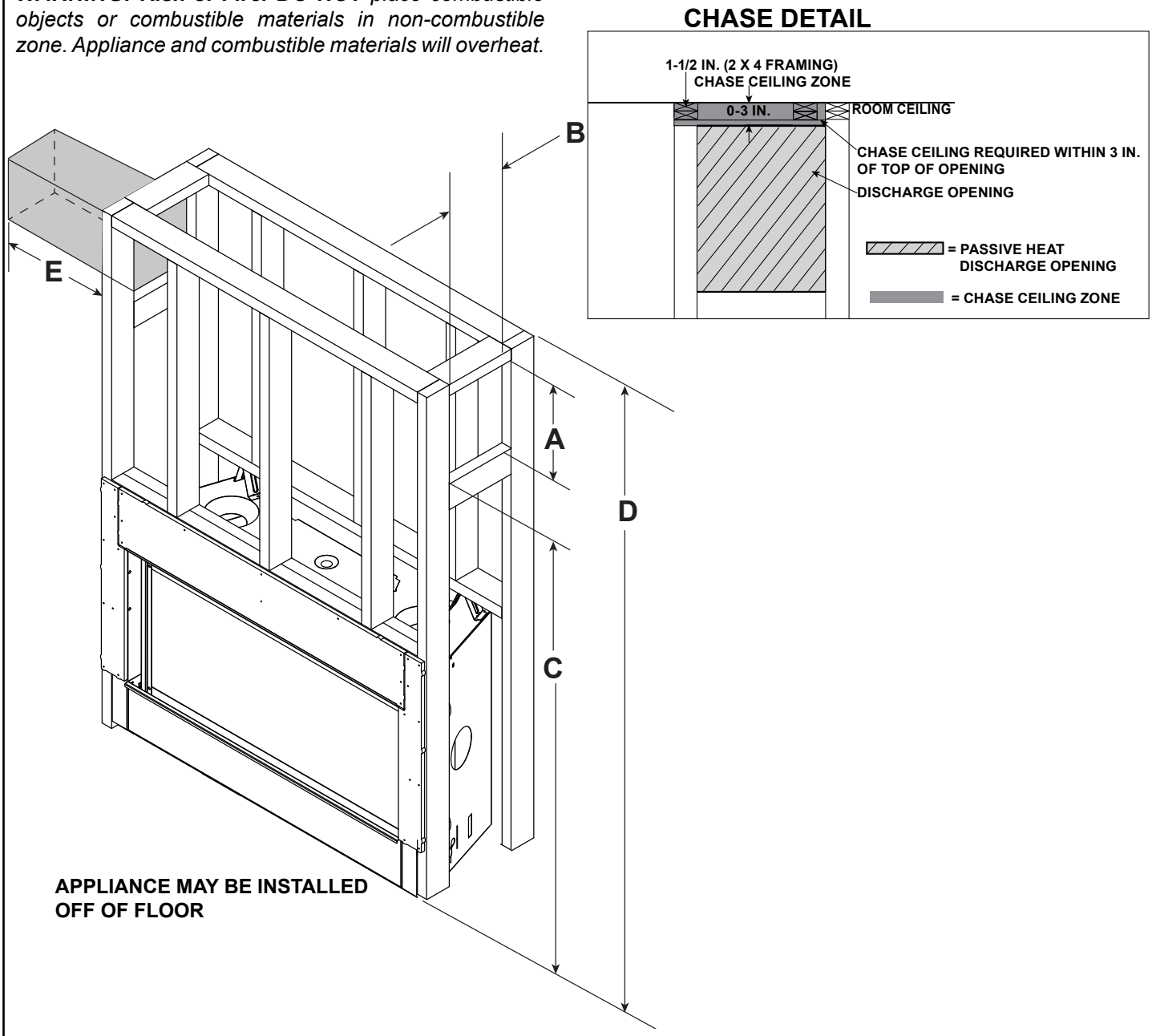

SIDE DISCHARGE FRAMING DIMENSIONS						
		A	B	C	D	E
		Height of Discharge Opening	Width of Discharge Opening	Minimum Clearance to Discharge Opening From Bottom of Appliance	Minimum Clearance Bottom of Appliance to Ceiling	Minimum Clearance to Combustible Materials
JADE32IN-B JADE42IN-B JADE42IL-B	Inches	12-1/4	8-3/4	63-5/8	77-3/8	18
	millimeters	311	222	1616	1965	457

Figure 3.9 Passive Heat Side Discharge Framing Dimensions

Framing Dimensions - Passive Heat Open Top Discharge (PH-LINEAR)

Open Top Discharge: Both sides and the top are open allowing air to be conveyed into the room.

WARNING! Risk of Fire! *Mesh screen required on bottom of discharge opening when discharge opening is greater than 3 inches. Secure mesh to top of framing.*

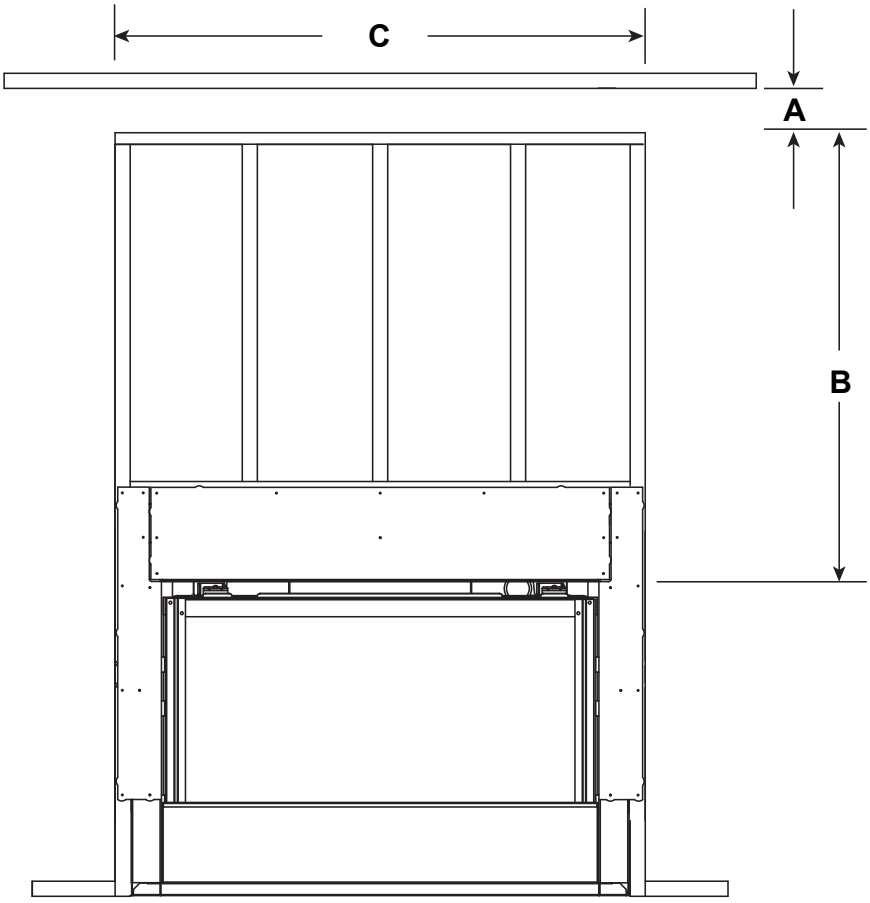

OPEN TOP DISCHARGE MINIMUM FRAMING DIMENSIONS				
		A*	B	C
		Height of Discharge Opening	Clearance to Discharge Opening	Width of Discharge Opening
JADE32IN-B	Inches	2	48	31-1/8
	millimeters	51	1219	791
JADE42IN-B JADE42IL-B	Inches	2	48	42-1/2
	millimeters	51	1219	1080

* Mesh screen required for front discharge or open top discharge passive heat installations with discharge opening of 3 inches or greater.

Figure 3.10 Passive Heat Minimum Framing Dimensions Open Top Discharge

C. Constructing the Appliance Chase

NOTICE: *Install appliance on hard metal or wood surfaces extending full width and depth.* ***DO NOT*** *install directly on carpeting, vinyl, or any combustible material other than wood.*

WARNING! Risk of Fire! *Maintain specified air space clearances to appliance and vent pipe:*

- *Insulation and other materials must be secured to prevent accidental contact.*
- *The chase must be properly blocked to prevent blown insulation or other combustibles from entering and making contact with fireplace or chimney.*
- *Failure to maintain airspace may cause overheating and a fire.*

A chase is a vertical box-like structure built to enclose the gas appliance and/or its vent system. In cooler climates the vent should be enclosed inside the chase.

NOTICE: *Treatment of ceiling firestops and wall shield firestops and construction of the chase may vary with the type of building. These instructions are not substitutes for the requirements of local building codes. Therefore, you MUST check local building codes to determine the requirements to these steps.*

NOTICE: Where required by code, install only sprinkler heads with a sprinkler activation temperature classified as Extra High.

- *Sprinklers inside of chase: Keep sprinkler head away from vent and chimney.*
- *Heat Management applications: Maintain 36 inches of clearance to openings from which heat is discharged such as convection slots, passive heat registers, heat zone registers, etc. Refer to Section 6.B for Heat Management options allowed for this appliance.*

Chases should be constructed and insulated in the same manner as the thermal envelope of the home based on the code requirements for that climate zone to prevent air leakage and draft problems. The chase is an extension of the building thermal envelope.

To further prevent drafts and air leakage, the wall shield and ceiling firestops should be sealed with caulk with a minimum of 300 ºF continuous exposure rating to seal gaps. Gas line holes and other openings should be sealed with caulk with a minimum of 300 ºF continuous exposure rating or stuffed with unfaced insulation. If the appliance is being installed on a cement surface, a layer of plywood may be placed underneath to prevent conducting cold up into the room.

Minimum height requirements for an exterior chase on a top-vented appliance are shown in Figure 3.11. Reference Figure 4.4 for additional clearances.

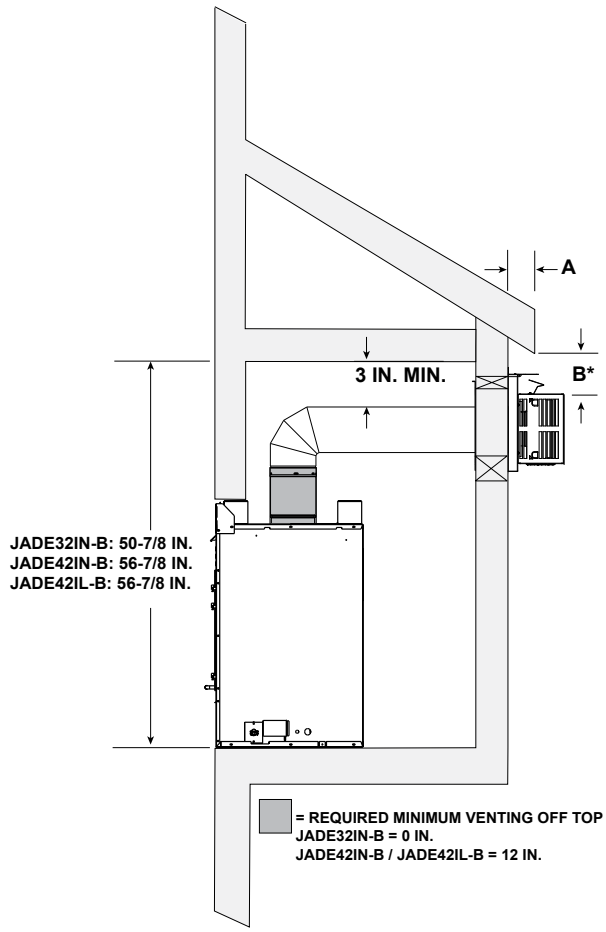

*** NOTE: If overhang "A" is less than 2 inches, clearance from top of termination cap to bottom of overhang "B" MUST be a minimum of 4 inches. If A is two inches or greater, see Figure 4.5, "Minimum Clearances for Termination."**

Figure 3.11 Exterior Chase - Minimum Height Requirements

D. Floor Protection

Vinyl Flooring

Vinyl flooring is sensitive to heat. Hearth and Home Technologies does not recommend adhesive based vinyl flooring due to thermal expansion. Floating-style flooring can be used, but will reach temperatures up to 110 °F in a room with ambient temperature of 70 °F. Consult flooring specifications to ensure compatibility.

4 Termination Location and Vent Information

A. Approved Pipe

WARNING! Risk of Fire, Delayed Ignition or Asphyxiation. *This appliance requires a separate vent.* ***DO NOT*** *vent to a pipe serving any other appliance.*

This appliance is only approved for use with the Hearth & Home Technologies SLP venting systems. Refer to Section 12.A for vent component information and dimensions. Only use listed decorative termination caps/shrouds with Hearth & Home Technologies approved venting systems.

DO NOT mix pipe, fittings or joining methods from different manufacturers.

The pipe is tested to be run inside an enclosed wall. There is no requirement for inspection openings at each joint within the wall.

This appliance is approved for use with Hearth & Home Technologies SLP venting systems. Refer to Section 12.A for vent component information and dimensions.

DO NOT mix pipe, fittings or joining methods from different manufacturers.

The pipe is tested to be run inside an enclosed wall. There is no requirement for inspection openings at each joint within the wall.

WARNING! Risk of Fire or Asphyxiation. *This appliance requires a separate vent.* ***DO NOT*** *vent to a pipe serving a separate solid fuel burning appliance.*

Approved Pipe - Flex

This appliance is approved for use with Hearth & Home Technologies SLP-FLEX (6-5/8 inch) and SLP-FLEX7 (7 inch) venting systems.

DO NOT mix pipe, fittings or joining methods from different manufacturers. SLP-FLEX and SLP-FLEX7 venting cannot be interchanged.

SLP-FLEX (6-5/8 Inch): Venting may be used in any venting configuration shown in the venting tables provided that the horizontal vent length is reduced by 25%.

SLP-FLEX7 (7 Inch-Canada Only): Venting requires adapter collars to transition from the 6-5/8 IN. appliance starting collar and to the 6-5/8 IN. termination cap. Refer to installation instructions included with the SLP-FLEX7 collar adapter (SLP-FLEX7-A). SLP-FLEX7 Series venting is approved for use in Canada only.

The pipe is tested to be run inside an enclosed wall. There is no requirement for inspection openings at each joint within the wall.

WARNING! Risk of Fire or Asphyxiation. *This appliance requires a separate vent.* ***DO NOT*** *vent to a pipe serving a separate solid fuel burning appliance.*

B. Vent Termination Minimum Clearances

⚠ WARNING

Fire Risk.

Maintain vent clearance to combustibles as specified.

- **DO NOT** pack air space with insulation or other materials.

Failure to keep insulation or other materials away from vent pipe could cause overheating and fire.

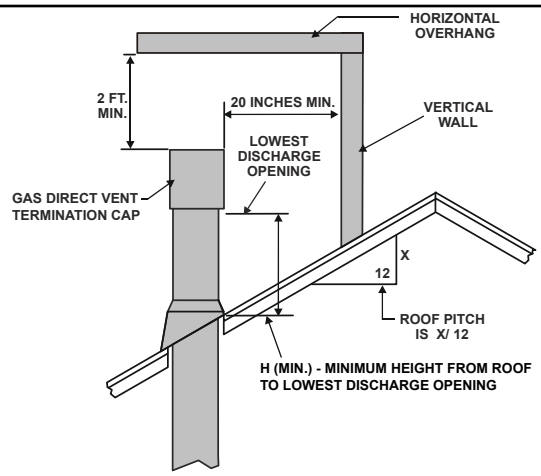

Roof Pitch	H (Min.) Ft
Flat to 6/12	1.0*
Over 6/12 to 7/12	1.25*
Over 7/12 to 8/12	1.5*
Over 8/12 to 9/12	2.0*
Over 9/12 to 10/12	2.5*
Over 10/12 to 11/12	3.25
Over 11/12 to 12/12	4.0
Over 12/12 to 14/12	5.0
Over 14/12 to 16/12	6.0
Over 16/12 to 18/12	7.0
Over 18/12 to 20/12	7.5
Over 20/12 to 21/12	8.0

* H minimum may vary depending on regional snowfall. Refer to local codes.

Figure 4.1 Minimum Height From Roof to Lowest Discharge Opening

A	B
6 in. (minimum) up to 20 in. *152 mm/508 mm*	18 in. minimum *457 mm*
20 in. and over	0 in. minimum

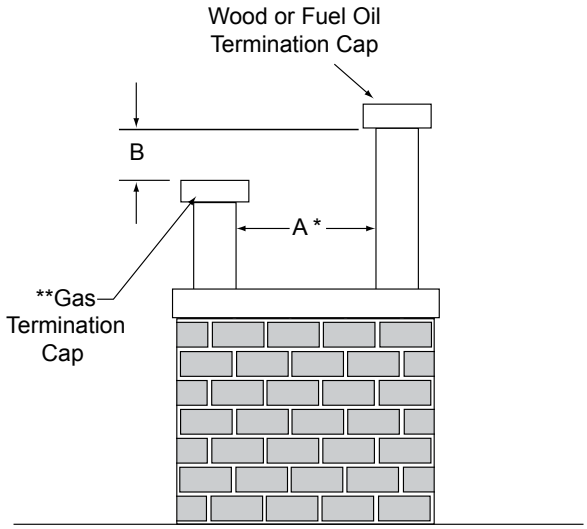

* If using decorative cap cover(s), this distance may need to be increased. Refer to the installation instructions supplied with the decorative cap cover.

** If two gas terminations are present, they may be level (B = 0 inches) provided A is a minimum of 6 inches.

Figure 4.2 Staggered Termination Caps

CAUTION! Risk of Burns! *Termination caps are HOT, consider proximity to doors, traffic areas or where people may pass or gather (sidewalk, deck, patio, etc.). Listed cap shields available. Contact your dealer.*

- Local codes or regulations may require different clearances.
- Hearth & Home Technologies assumes no responsibility for the improper performance of the appliance when the venting system does not meet these requirements.
- Vinyl protection kits are suggested for use with vinyl siding.
- Measure horizontal and vertical termination cap clearances as noted in Figure 4.3 and Figure 4.4.

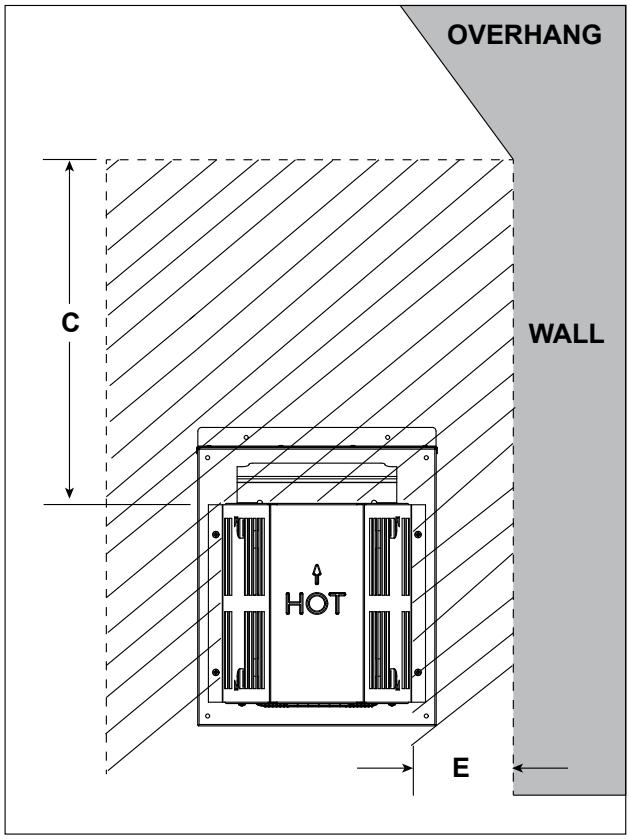

C and E dimensions are defined in Figure 4.5.

Figure 4.4 Measure Horizontal and Vertical Termination Clearance to Trapezoid Portion of Cap

H=Measure Horizontal Distances from H
V=Measure Vertical Distances from V

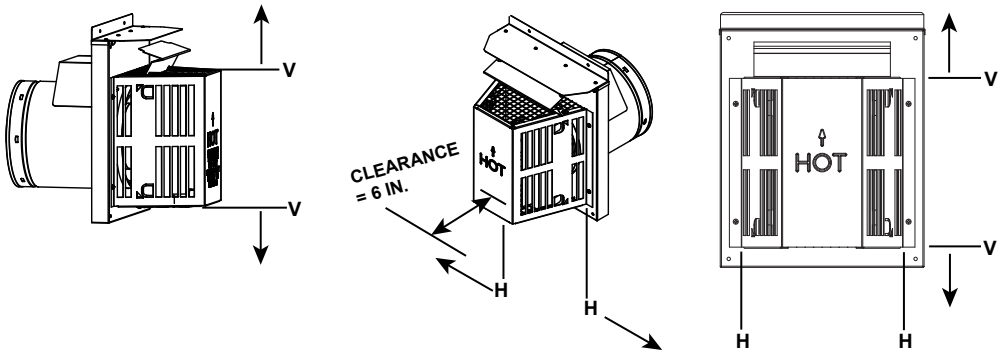

Figure 4.3

C. Vent Terminal Clearances

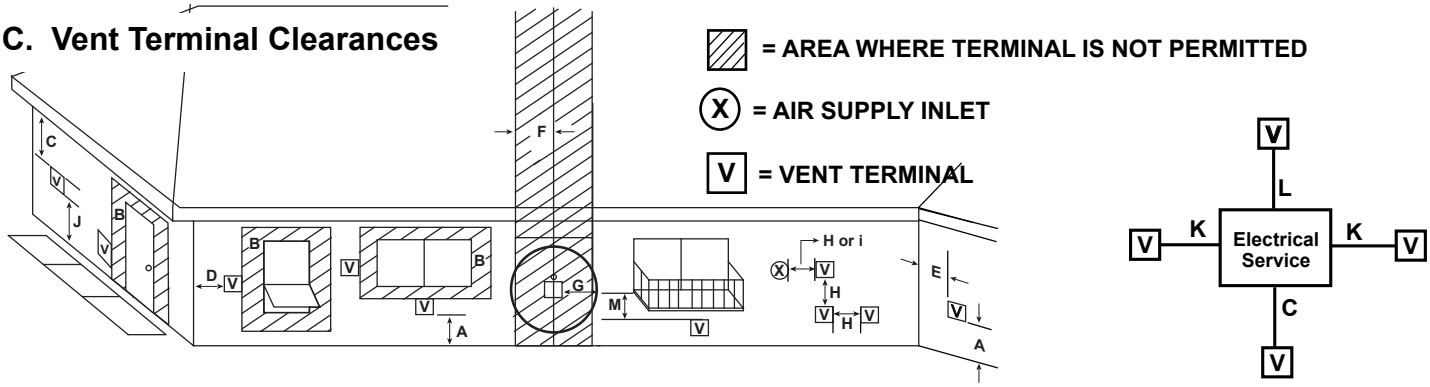

U.S.A. Installations: In accordance with the current ANSI Z223.1/NFPA 54, National Fuel Gas Code.
Canadian Installations: In accordance with the current CSA B149.1, Natural Gas and Propane Installation Code.

		U.S.A.	CANADA
A	Clearance above grade,veranda, porch, deck, or balcony	12 in. (305 mm)	12 in. (305 mm)
B	Clearance to window or door that may be opened, or to permanently closed window	9 in. min. (229 mm min.)	12 in. min. (305 mm min.)
C	clearance below unventilated soffit	18 in. (457 mm)	18 in. (457 mm)
	clearance below ventilated soffit	18 in. (457 mm)	18 in. (457 mm)
	clearance below any vinyl soffits and electrical service	30 in. (762 mm)	30 in. (762 mm)
D	clearance to outside corner	6 in. (152 mm)	6 in. (152 mm)
E	clearance to inside corner	6 in. (152 mm)	6 in. (152 mm)
F	not to be installed above a gas meter/regulator assembly within 3 feet horizontally from the center-line of the regulator	3 ft (914 mm)	3 ft (914 mm)
G	clearance to gas service regulator vent outlet	3 ft (914 mm)	3 ft (914 mm)
H	clearance to non-mechanical air supply inlet to building or the combustion air inlet to any other appliance termination (mechanical or non-mechanical)	9 in. (229 mm)	12 in. (305 mm)
I	clearance to a mechanical (powered) air supply inlet ***(All mechanical air intakes within 10 feet of a horizontal termination cap must be a minimum of 3 feet below termination.)	3 ft (914 mm)***	6 ft (1.8 m)
J	On **public** property: clearance above paved sidewalk or a paved driveway.	7 ft (2.1 m)	7 ft (2.1 m)**
	**(A vent shall not terminate directly above a sidewalk or paved driveway which is located between two single family dwellings and serves both dwellings.)		
K	clearance from sides of electrical service	6 in. (152 mm)	6 in. (152 mm)
	Location of the vent termination must not interfere with access to the electrical service.		
L	clearance above electrical service	12 in. (305 mm)	12 in. (305 mm)
	Location of the vent termination must not interfere with access to the electrical service.		
M	clearance under veranda, porch, deck, balcony or overhang *(Permitted only if veranda, porch, deck, or balcony is fully open on a minimum of two sides beneath the floor.)	18 in. (457 mm)	12 in. (305 mm)*
	vinyl or composite overhang	42 in. (1067 mm)	42 in. (1067 mm)

Figure 4.5 Minimum Clearances for Termination

D. Use of Elbows

Diagonal runs have both vertical and horizontal vent aspects when calculating the effects. Use the rise for the vertical aspect and the run for the horizontal aspect. See Figure 4.6.

Two 45º elbows may be used in place of one 90º elbow. On 45º runs, one foot of diagonal is equal to 8-1/2 inch (216 mm) horizontal run and 8-1/2 inch (216 mm) vertical run. A length of straight pipe is allowed between two 45º elbows. See Figure 4.6.

Figure 4.7 shows the vertical and horizontal offsets for SLP elbows.

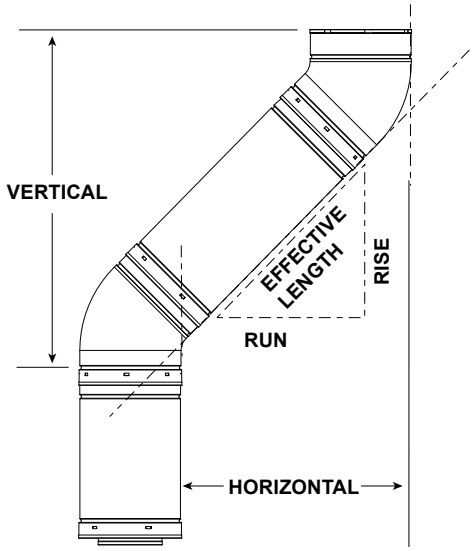

SLP Pipe	Effective Length		Rise/Run	
	Inches	Millimeters	Inches	Millimeters
SLP4	4	102	2-3/4	70
SLP6	6	152	4-1/4	108
SLP12	12	305	8-1/2	216
SLP24	24	610	17	432
SLP36	36	914	25-1/2	648
SLP48	48	1219	34	864
SLP6A	3 to 6	76 to 152	2-1/8-4-1/4	54-108
SLP12A	3 to 12	76 to 305	2-1/8-8-1/2	54-216

Figure 4.6

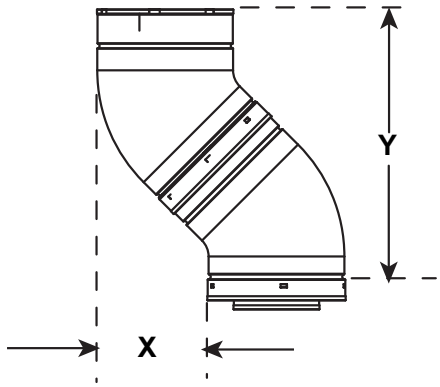

Vent Type	X		Y	
	Inches	Millimeters	Inches	Millimeters
SLP	5-1/4	133	11-3/8	289

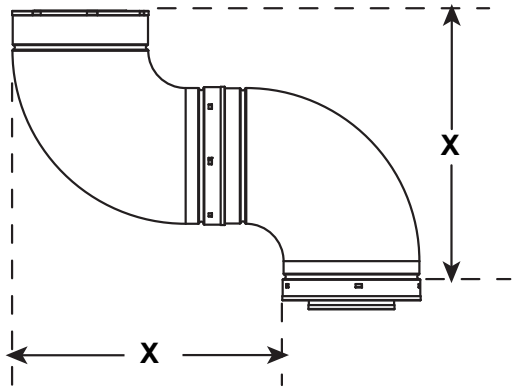

Vent Type	X	
	Inches	Millimeters
SLP	11-1/4	286

Figure 4.7 Vertical and Horizontal Offset for DVP and SLP Elbows

Measuring Standards:

Vertical and horizontal measurements listed in the vent diagrams and clearances for termination were made using the following standards:

- Pipe measurements are shown using the effective length of pipe. See Section 12.A (Figure 12.1) for information on effective length of pipe components.
- Horizontal terminations are measured to the outside mounting surface (flange of termination cap). See Figure 4.8.
- Vertical terminations are measured to top of last section of pipe. See Figure 4.9.
- Horizontal pipe installed level with no rise.

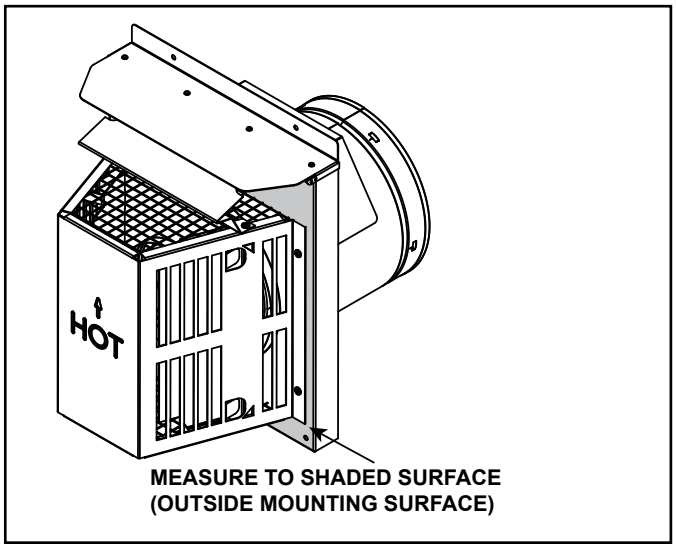

Figure 4.8 Measure to Outside Mounting Surface

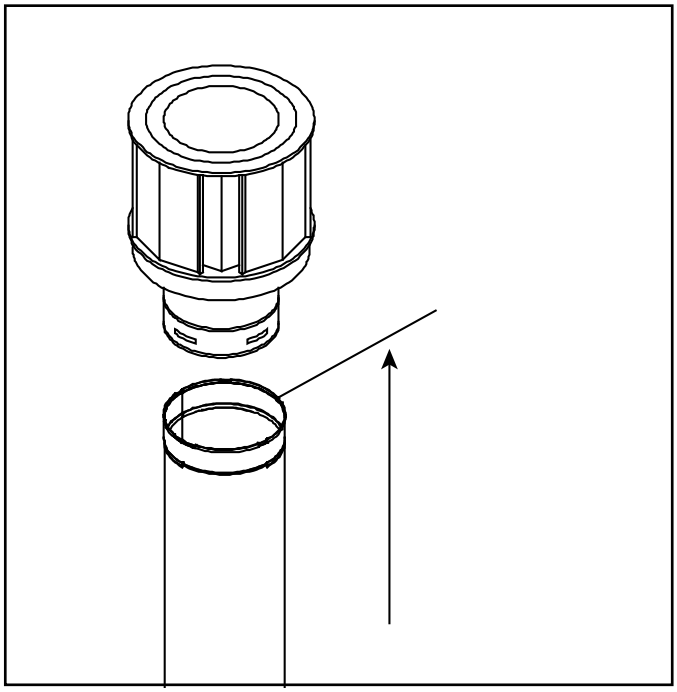

Figure 4.9 Measure to Top of Last Section of Pipe

E. Use of Flex Vent (SLP-FLEX Series 6-5/8 Inch)

The flex vent must be supported with the spacing between support intervals not exceeding 4 feet, with no more than 1/2 inch sag between supports.

A support is required at each change in venting direction, and in any location where it is necessary to maintain the necessary clearance to combustibles. A simple “up and out” installation (Figure 4.10) requires only enough support to maintain the necessary clearance to combustibles. However, the vent attachment point and the firestop location are considered to be supports.

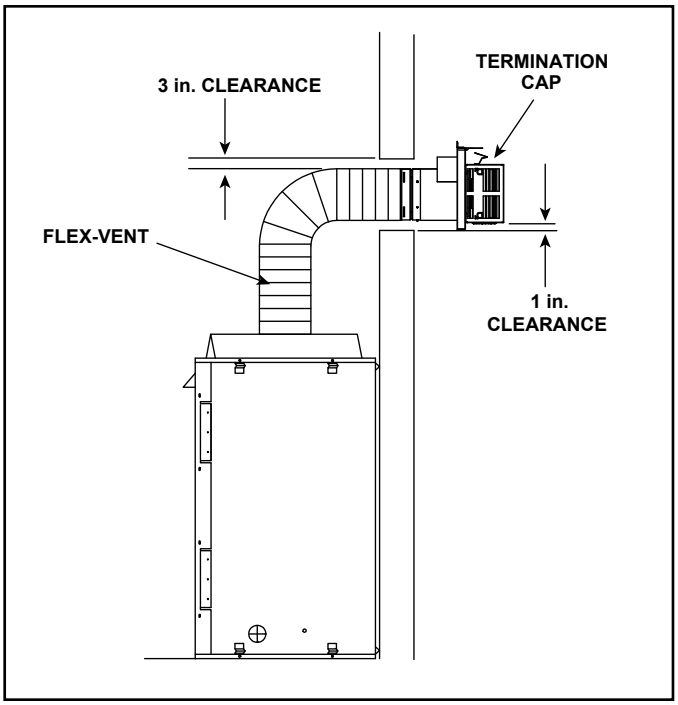

Figure 4.10 Flex Vent Pipe - Generic Fireplace Shown

F. Vent Diagrams

General Rules:

- SUBTRACT 3 ft from the total H measurement for each 90º elbow installed horizontally.
- SUBTRACT 1-1/2 ft from the total H measurement for each 45º elbow installed horizontally.
- A maximum of three 90º elbows (or six 45º elbows) may be used in any vent configuration unless configured as shown in Figure 4.20 which allows four elbows. Some elbows may be installed horizontally. See Figure 4.15.
- Elbows may be placed back to back anywhere in the system.
- Any 90º elbow may be replaced with two back to back 45º elbows.
- When penetrating a combustible wall, a wall shield firestop must be installed.
- When penetrating a combustible ceiling, a ceiling firestop must be installed.
- Horizontal runs of vent do not require vertical rise; horizontal runs may be level.
- Horizontal termination cap should have a 1/4 inch downward slant to allow any moisture in cap to be released. See Figure 4.11.

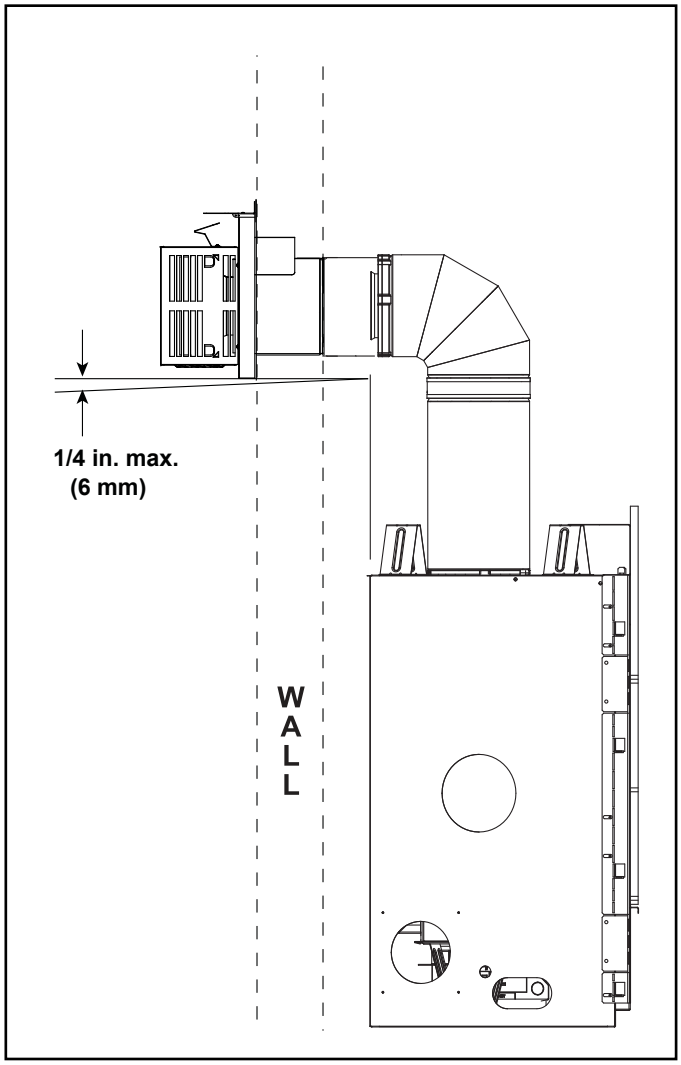

Figure 4.11 Vent Cap

One Elbow

V Minimum		H_1 Maximum			
		JADE42IN-B JADE42IL-B		JADE32IN-B	
90° Elbow		Not Allowed		1 ft.	305 mm
1 ft.	305 mm	1 ft.	305 mm	2 ft.	610 mm
2 ft.	610 mm	5 ft.	1.5 m	5 ft.	1.5 m
3 ft.	914 mm	8 ft.	2.4 m	8 ft.	2.4 m
4 ft.	1.2 m	10 ft.	3.0 m	15 ft.	4.6 m
5 ft.	1.5	14 ft.	4.3 m		
		H MAX. =14 ft. (4.3 m) V + H MAX. = 40 ft. (12.2 m)		H MAX. =15 ft. (4.6 m) V + H MAX. = 40 ft. (12.2 m)	

CAUTION: The SLP-HRC-SS termination caps are not approved for use with these models. May lead to elevated glass temperature that may cause tempered glass breakage.

Note: Use SLP Series components only.

Note: There MUST be a 25% reduction in total H when using SLP-FLEX Series (6-5/8 inch) vent except when using the simple up and out installation. See Figure 4.10.

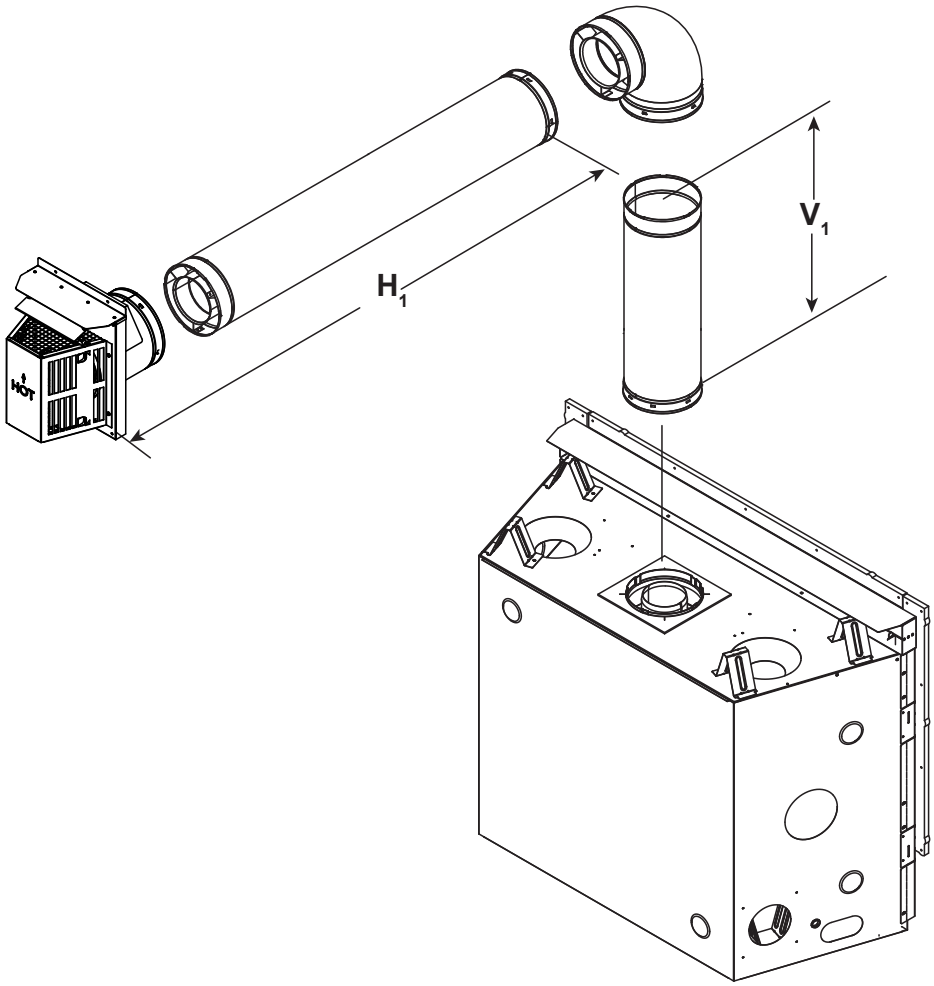

Figure 4.12

Two Elbows

Note: Use SLP Series components only.

Note: There MUST be a 25% reduction in total H when using SLP-FLEX Series (6-5/8 inch) vent except when using the simple up and out installation. See Figure 4.10.

V Minimum		$H_1 + H_2$ Maximum			
		JADE42IN-B JADE42IL-B		JADE32IN-B	
90° Elbow		Not Allowed		1 ft.	305 mm
1-1/2 ft.	457 mm	2 ft.	610 mm	2 ft.	610 mm
2 ft.	610 mm	5 ft.	1.5 m	5 ft.	1.5 m
3 ft.	914 mm	8 ft.	2.4 m	8 ft.	2.4 m
4 ft.	1.2 m	10 ft.	3.0 m	15 ft.	4.6 m
5 ft.	1.5	15 ft.	4.6 m		
$H_1 + H_2$ MAX. =15 ft. (4.6 m) $V_1 + H_1 + H_2$ MAX. = 40 ft. (12.2 m)					

CAUTION: The SLP-HRC-SS termination caps are not approved for use with these models. May lead to elevated glass temperature that may cause tempered glass breakage.

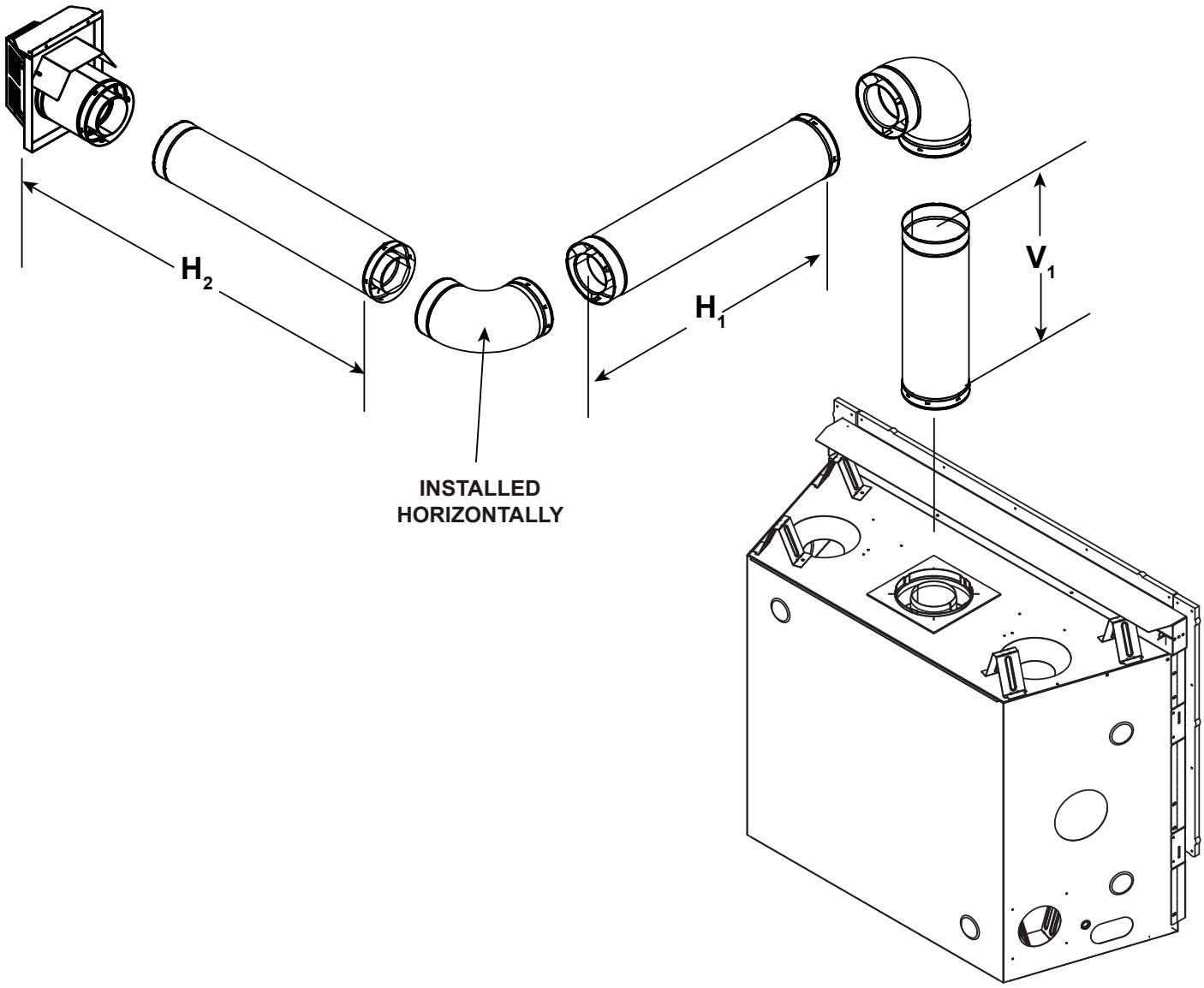

Figure 4.13

Three Elbows

JADE32IN-B					
V_1 Minimum		$H_1 + H_2$ Maximum		V_2	$V_1 + V_2$ Minimum
90° Elbow		6 ft.	1.8 m	*	*
1 ft.	305 mm	10 ft.	3.0 m	*	*
2 ft.	610 mm	12 ft.	3.7 m	*	*
3 ft.	914 mm	14 ft.	4.3 m	*	*
$H_1 + H_2$ MAX. =14 ft. (4.3 m) $V_1 + V_2 + H_1 + H_2$ MAX. = 40 ft. (12.2 m) *No specific restrictions on this value EXCEPT $V_1 + V_2 + H_1 + H_2$ cannot exceed 40 ft. (12.2 m)					

JADE42IN-B JADE42IL-B					
V_1 Minimum		$H_1 + H_2$ Maximum		V_2	$V_1 + V_2$ Minimum
1-1/2 ft.	457 mm	6 ft.	1.8 m	*	*
2 ft.	610 mm	9 ft.	2.7 m	*	*
3 ft.	914 mm	14 ft.	4.3 m	*	*
$H_1 + H_2$ MAX. =14 ft. (4.3 m) $V_1 + V_2 + H_1 + H_2$ MAX. = 40 ft. (12.2 m) *No specific restrictions on this value EXCEPT $V_1 + V_2 + H_1 + H_2$ cannot exceed 40 ft. (12.2 m)					

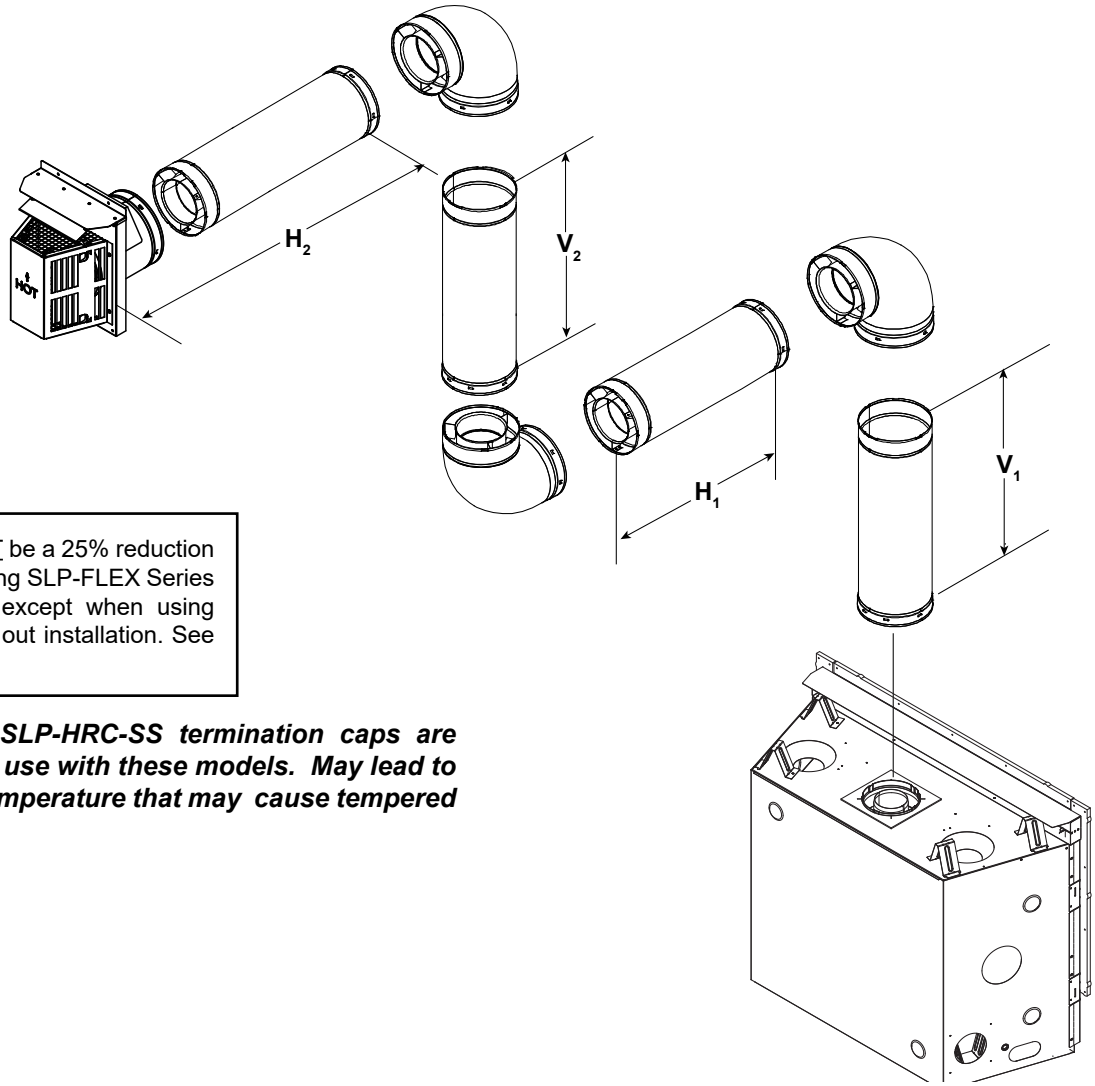

Note: There MUST be a 25% reduction in total H when using SLP-FLEX Series (6-5/8 inch) vent except when using the simple up and out installation. See Figure 4.10.

CAUTION: The SLP-HRC-SS termination caps are not approved for use with these models. May lead to elevated glass temperature that may cause tempered glass breakage.

Figure 4.14

Three Elbows

⚠ WARNING

Risk of Fire!

This vent configuration can ONLY be used for JADE42IN-B Natural Gas appliance.

V Minimum		$H_1 + H_2 + H_3$ MAXIMUM JADE42IN-B (NG ONLY)	
4 ft.	1.2 m	15 ft.	4.6 m
$H_1 + H_2 + H_3$ MAX. = 15 ft. (4.6 m) V_1 MAX. = 7 ft (2.1 m)			

Note: Use SLP Series components only.

Note: There MUST be a 25% reduction in total H when using SLP-FLEX Series (6-5/8 inch) vent except when using the simple up and out installation. See Figure 4.10.

CAUTION: The SLP-HRC-SS termination caps are not approved for use with these models. May lead to elevated glass temperature that may cause tempered glass breakage.

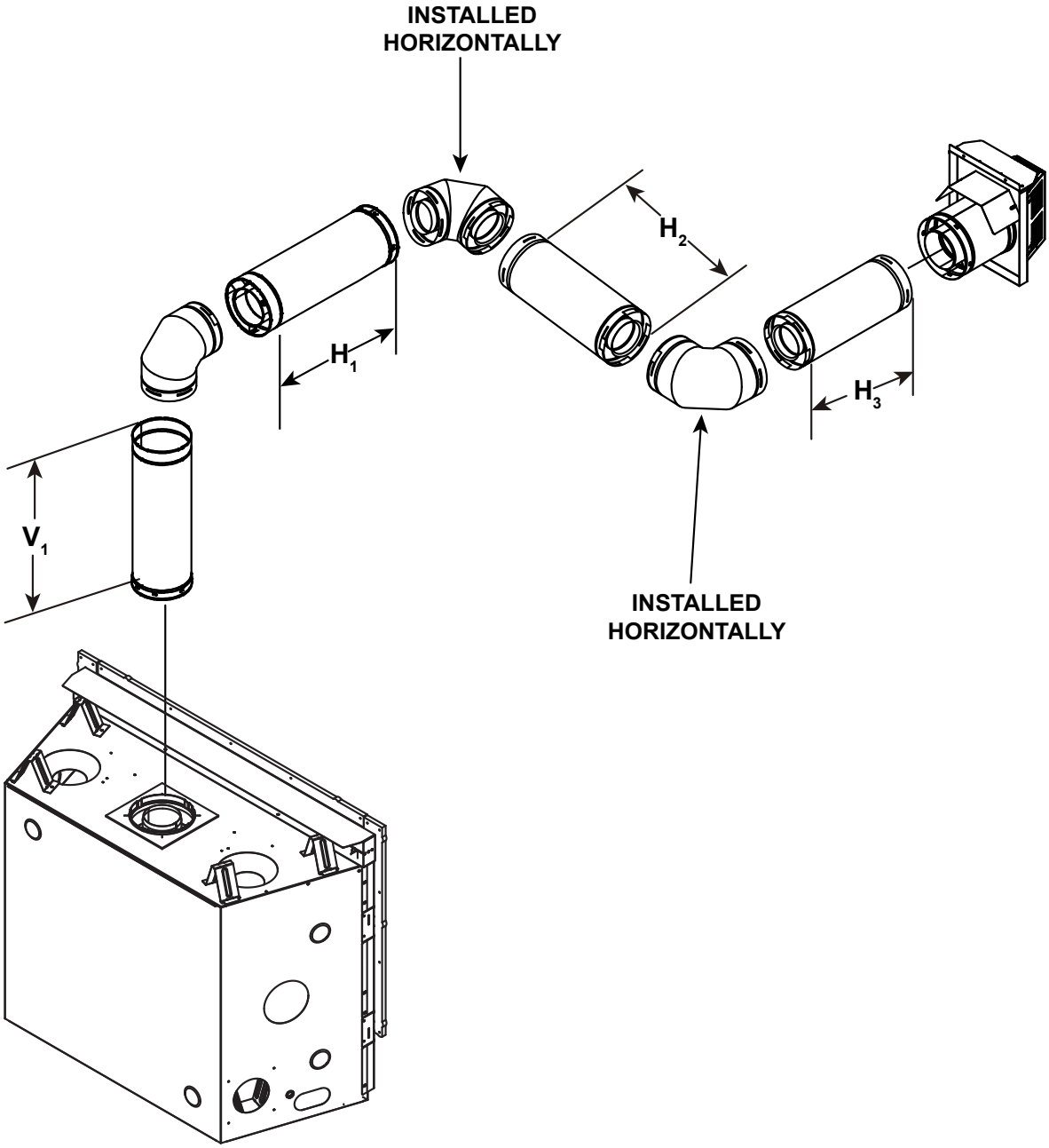

Figure 4.15

No Elbow

V_1 = 60 ft. Max. (18.3 m)

Note: Use SLP Series components only.

Note: If installing a vertical vent/termination off the top of the appliance, the optional exhaust restrictor may be needed.

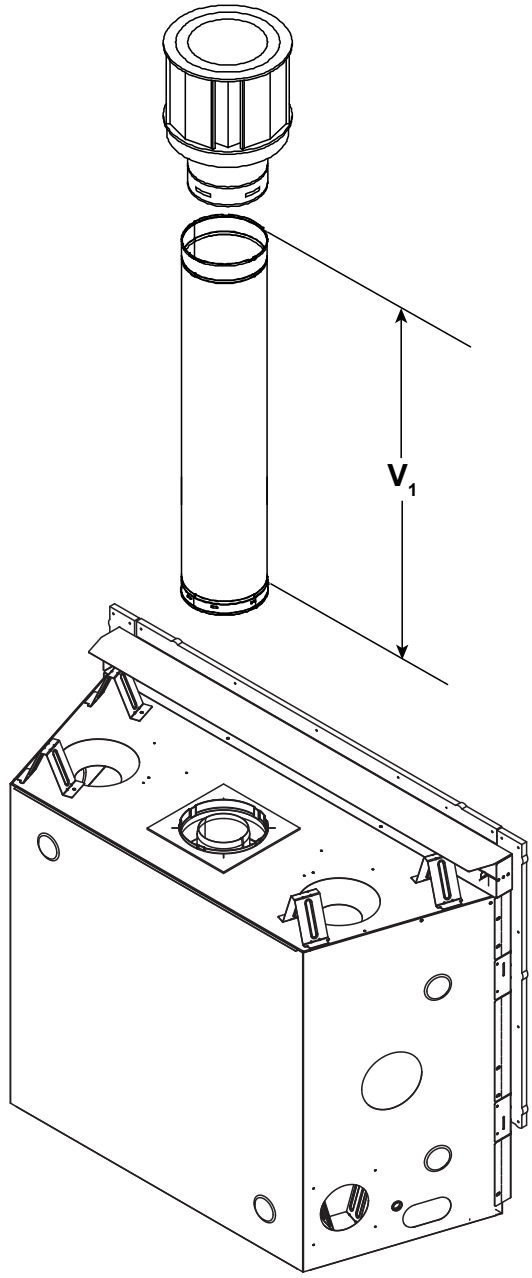

Figure 4.16

Exhaust Restrictor Instructions

Exhaust restrictors are recommended for these vertically terminated products which have excessive draft. Exhaust restrictors will compensate for high draft, and restore visual flame height. If the vent configuration has a total vertical of 15-60 feet, an exhaust restrictor may be needed. The exhaust restrictor can be located in the appliance manual bag.

Exhaust Restrictor Installation

1. **JADE42IN-B/JAD42IL-B Only:** Remove inner heat shield by removing two wing nuts from top front of heat shield and two screws that secure the heat shield to back wall of fireplace. Retain heat shield and fasteners.
2. **BOTH SIZES:** Center the exhaust restrictor in the open end of the exhaust outlet and secure through the slots on the exhaust restrictor with the two 1/4 in. self-tapping screws provided in the appliance manual bag. See Figure 4.17.
3. **JADE42IN-B/JADE42IL-B Only:** Reinstall shield by securing it with the two wing nuts and two screws previously removed in Step 1.

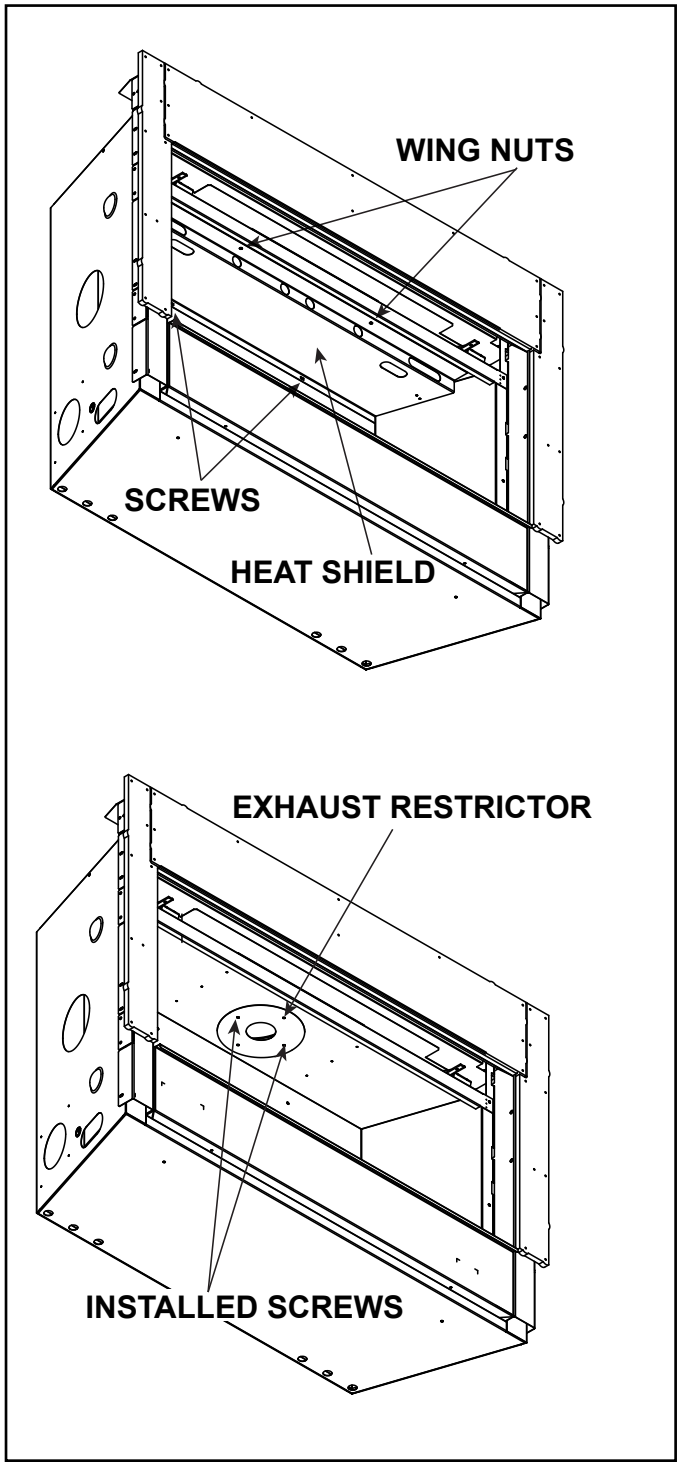

Figure 4.17 Installing Restrictor

Two 90º Elbows

JADE32IN-B					
V_1 Minimum		H Maximum		V_2	$V_1 + V_2$ Minimum
90° Elbow		2 ft.	610 mm	*	*
1 ft.	305 mm	3 ft.	914 mm	*	*
2 ft.	610 mm	5 ft.	1.5 m	*	*
3 ft.	914 mm	7 ft.	2.1 m	*	*
4 ft.	1.2 m	15 ft.	4.6 m	*	*
H MAX. =15 ft. (4.6 m) $V_1 + V_2$ + H MAX. = 40 ft. (12.2 m) * No specific restrictions on this value EXCEPT $V_1 + V_2$ + H cannot exceed 40 ft. (12.2 m)					

JADE42IN-B JADE42IL-B					
V_1 Minimum		H Maximum		V_2	$V_1 + V_2$ Minimum
1 ft.	305 mm	2 ft.	610 mm	*	*
2 ft.	610 mm	3 ft.	914 mm	*	*
3 ft.	914 mm	5 ft.	1.5 m	*	*
4 ft.	1.2 m	7 ft.	2.1 m	*	*
5 ft.	1.5 m	15 ft.	4.6 m	*	*
H MAX. =15 ft. (4.6 m) $V_1 + V_2$ + H MAX. = 40 ft. (12.2 m) * No specific restrictions on this value EXCEPT $V_1 + V_2$ + H cannot exceed 40 ft. (12.2 m)					

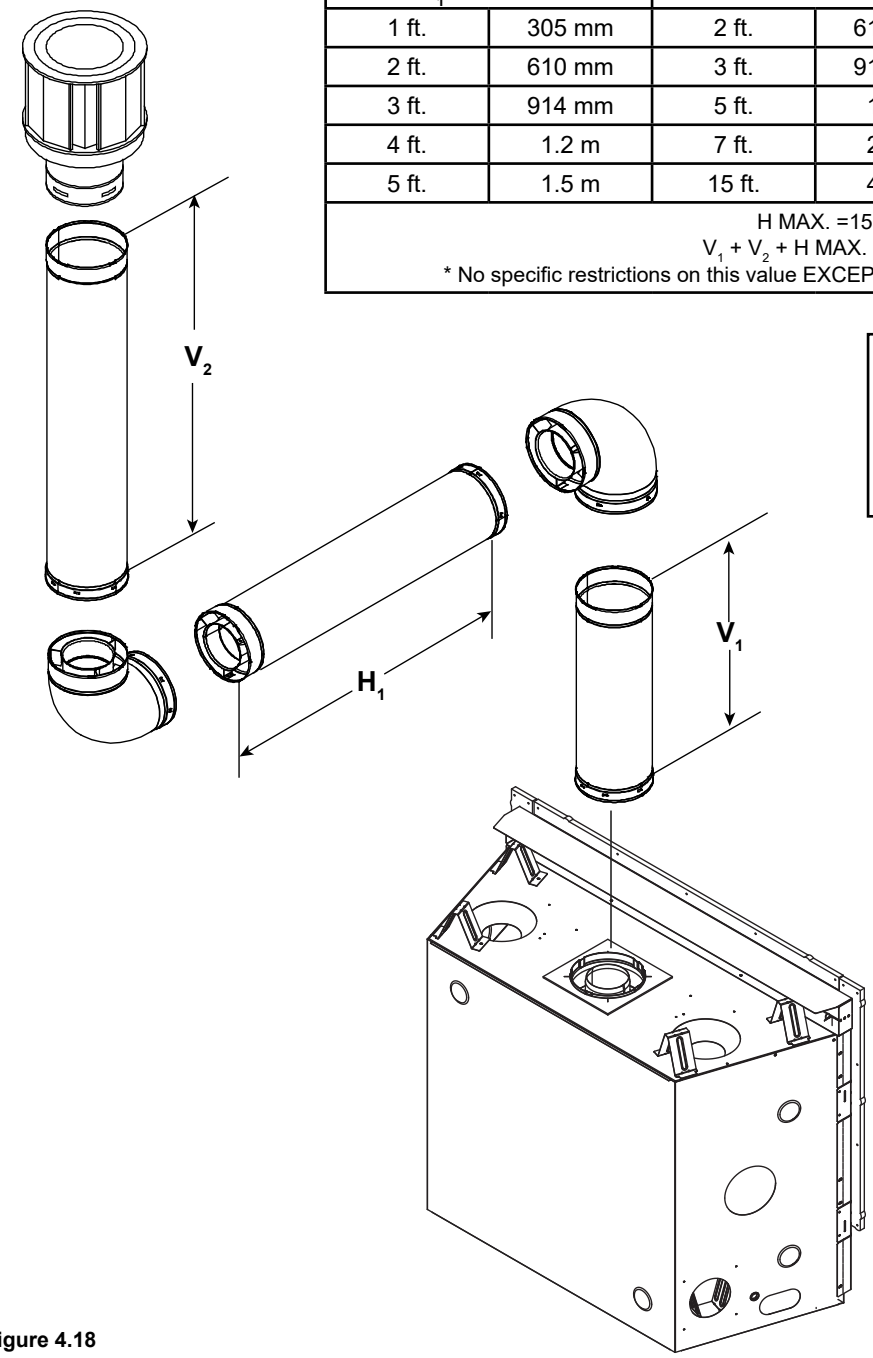

Note: There MUST be a 25% reduction in total H when using SLP-FLEX Series (6-5/8 inch) vent except when using the simple up and out installation. See Figure 4.10.

Note: Use SLP Series components only.

Figure 4.18

Three 90º Elbows

Note: Use SLP Series components only.

JADE32IN-B					
V_1 Minimum		$H_1 + H_2$ Maximum		V_2	$V_1 + V_2$ Minimum
90° Elbow		1 ft.	305 mm	*	*
1 ft.	305 mm	2 ft.	610 mm	*	*
2 ft.	610 mm	4 ft.	1.2 m	*	*
3 ft.	914 mm	6 ft.	1.8 m	*	*
4 ft.	1.2 m	14 ft.	4.3 m	*	*
H MAX. =14 ft. (4.3 m) $V_1 + V_2 + H_1 + H_2$ MAX. = 40 ft. (12.2 m) * No specific restrictions on this value EXCEPT $V_1 + V_2 + H_1 + H_2$ cannot exceed 40 ft. (12.2 m)					

JADE42IN-B JADE42IL-B					
V_1 Minimum		$H_1 + H_2$ Maximum		V_2	$V_1 + V_2$ Minimum
1 ft.	305 mm	1 ft.	305 mm	*	*
2 ft.	610 mm	2 ft.	610 mm	*	*
3 ft.	914 mm	4 ft.	1.2 m	*	*
4 ft.	1.2 m	6 ft.	1.8 m	*	*
5 ft.	1.5 m	14 ft.	4.3 m	*	*
H MAX. =14 ft. (4.3 m) $V_1 + V_2 + H_1 + H_2$ MAX. = 40 ft. (12.2 m) * No specific restrictions on this value EXCEPT $V_1 + V_2 + H_1 + H_2$ cannot exceed 40 ft. (12.2 m)					

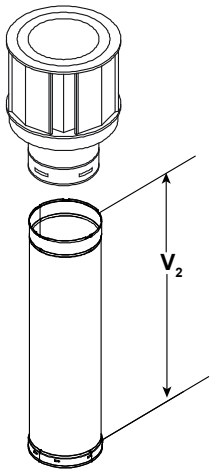

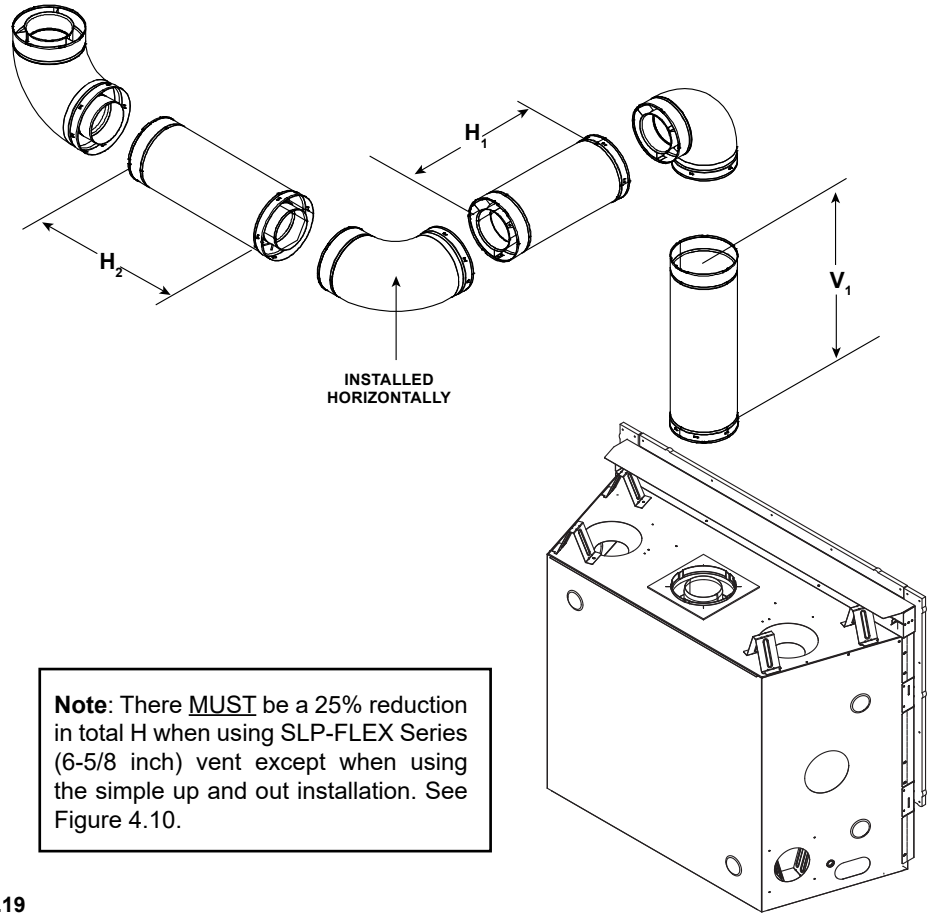

Note: There MUST be a 25% reduction in total H when using SLP-FLEX Series (6-5/8 inch) vent except when using the simple up and out installation. See Figure 4.10.

Figure 4.19

Four 90º Elbows

Note: Use SLP Series components only.

Note: There MUST be a 25% reduction in total H when using SLP-FLEX Series (6-5/8 inch) vent except when using the simple up and out installation. See Figure 4.10.

JADE42IN-B, JADE42IL-B & JADE32IN-B									
V_1 MIN.		H_1 MAX.		V_2 MIN.		H_2 MAX.		V_3 MIN.	
2-1/2 ft.	762 mm	4 ft.	1.2 m	4 ft.	1.2 m	4 ft.	1.2 m	3-1/2 ft.	1.0 m
$V_1 + V_2 + V_3 + H_1 + H_2$ Maximum= 40 ft. (12.2 m)									

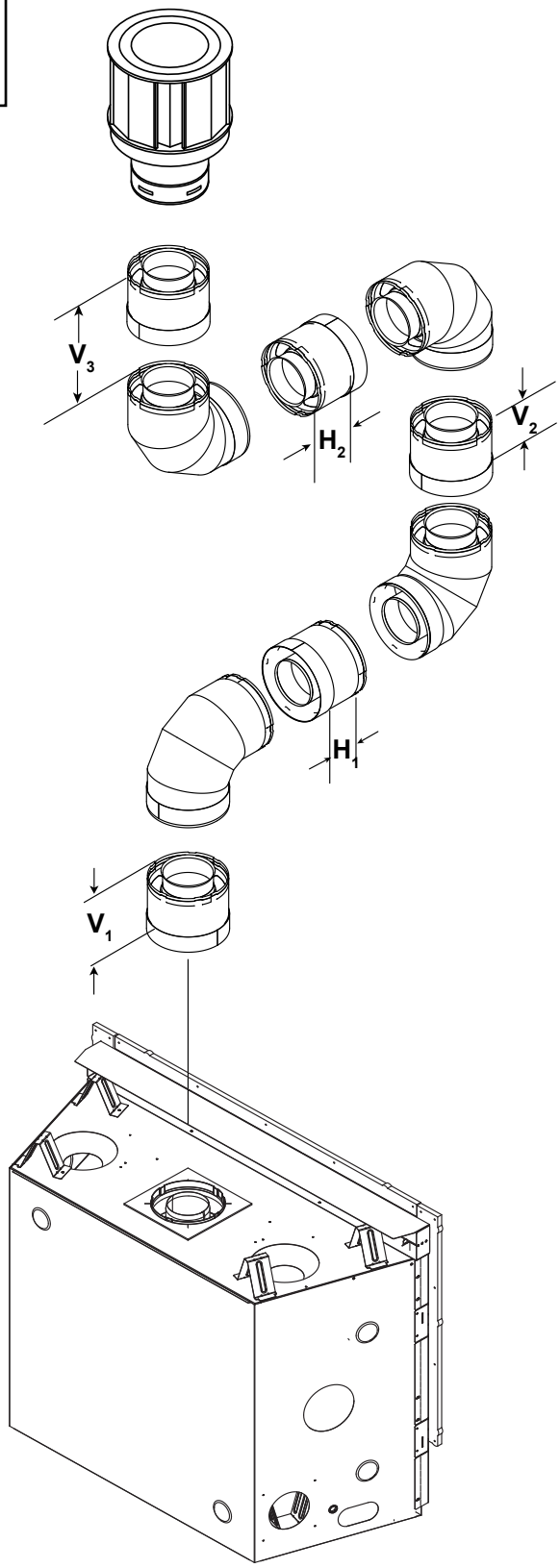

Figure 4.20

Coaxial to Colinear Venting

WARNING! Risk of Fire! *Coaxial to colinear venting configuration may only be used in existing non-combustible chimney. Installation in any other venting application could cause fire.*

The coaxial to colinear adapter (DV-46DVA-GCL) is approved for installations into solid fuel masonry or factory built fireplaces that have been installed in accordance with the National, Provincial, State and local building codes. The coaxial to colinear vent components are shown in Section 12.A. The DV-46DVA-GCL must be recessed into existing masonry fireplace. See Table 1 and Figure 4.21.

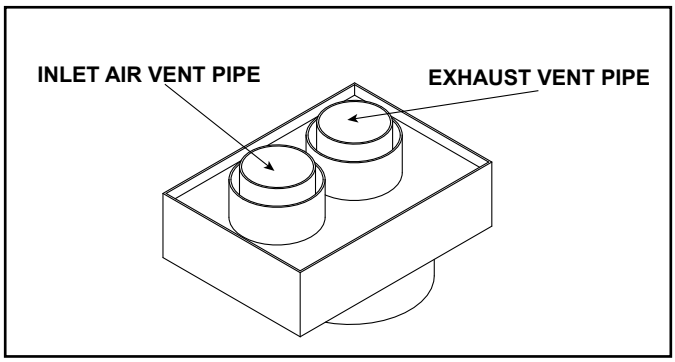

Figure 4.21 Coaxial/Colinear Appliance Connector

Prior to installing the gas appliance:

- Have the chimney and adjacent structure inspected and cleaned by qualified professionals. Hearth & Home Technologies recommends that NFI or CSIA certified professionals, or technicians under the direction of certified professionals, conduct a minimum of a NFPA 211 Level 2 inspection of the chimney.
- Replace component parts of the chimney and fireplace as specified by the professionals.
- Ensure all joints are properly engaged and the chimney is properly secured.

Stainless Steel Flex Requirement - JADE32IN-B ONLY:

The JADE32IN-B model requires the use of a 3 ft. stainless steel flex liner (768-380A) to be installed directly to the exhaust collar on the DV-46DVA-GCL connector.

WARNING! Risk of Fire! Risk of Asphyxiation! *Failure to install the stainless steel flex could cause excessive flex vent temperatures.*

- *Aluminum material degradation could cause flex vent system to fail.*
- *Installer MUST install the 3 ft. stainless steel flex on JADE32IN-B.*

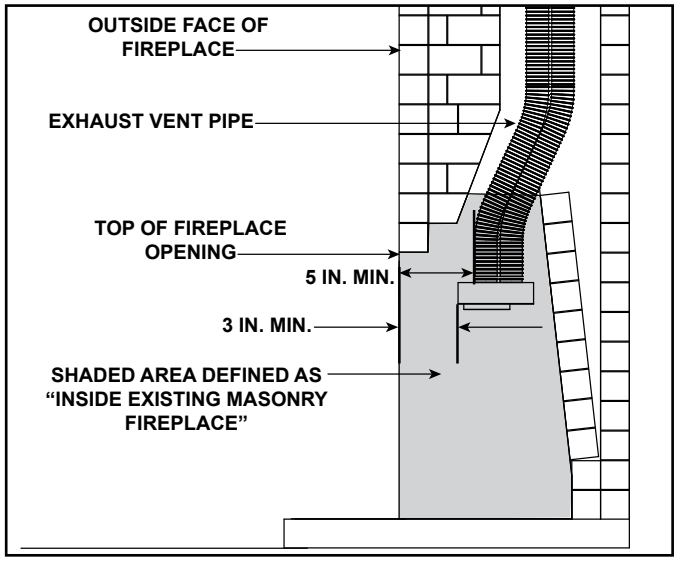

Figure 4.22 Existing Fireplace DV-46DVA-GCL Clearance Requirements

Table 1

CLEARANCE TO COMBUSTIBLES REQUIREMENTS	
DV-46DVA-GCL	3 IN.
Exhaust Vent Pipe	5 IN.

Clearances to Combustibles:

Refer to Section 3 for clearances to the appliance, mantel, mantel legs and wall projection.

Refer to Section 5 for pipe clearances to combustibles.

Termination Cap

For installation of termination cap see minimum vent heights for various pitched roofs. See Section 4.A.

Flue Damper

Fully lock the solid fuel fireplace's flue damper in the open position, OR completely remove it.

Venting Components

The LINK-DV30B is approved for use with the coaxial/colinear venting application. The LINK-DV30B kit includes:

- Two 30 foot sections of flexible vent pipe (3 inches Ø). One section is used to draw combustion air and the other section is used to expel exhaust gases.
- One vertical termination cap.

CAUTION! DO NOT use any flue restrictor when venting with the DV-46DVA-GCL adapter and LINK-DV30B kit. *This could result in poor flame appearance, sooting, pilot malfunction, or overheating.*

Connecting the DV-46DVA-GCL Adapter to Appliance

WARNING! Risk of Fire, Explosion or Asphyxiation! *Do NOT connect this gas appliance to a chimney flue serving a separate solid fuel or gas burning appliance.*

- *Could impair safe operation of this appliance or other appliances connected to the flue.*
- *Vent this appliance directly outside.*
- *Use separate vent system for this appliance.*

Top Vent

- Remove top seal cap and insulation if equipped. See Section 6, "Appliance Preparation." Attach the DV-46DVA-GCL adapter to the appliance starting collar with 3-1/2 in. self-tapping screws. See Figure 4.23.

Connecting the LINK-DV30B to the DV-46DVA-GCL adapter

- Insert the two sections of flexible vent pipe down the existing chimney.
- Attach one 3 ft section of flex pipe to the exhaust collar on top of the DV-46DVA-GCL adapter with three screws.
- Attach one section of flexible vent pipe to the 3 ft flex pipe with three self-tapping screws.
- Attach one section of flexible vent pipe to the inlet collar on top of the DV-46DVA-GCL adapter with three self-tapping screws.
- To minimize cold air drafts, seal around the flex vents at the damper inside the chimney with non-combustible unfaced fiberglass or rock wool insulation.

The DV-46DVA-GCL adapter must be recessed into existing masonry fireplace. This measurement is taken from the top of the fireplace opening. See Table 1 and Figure 4.22.

CAUTION! DO NOT use any flue restrictor when venting with the DV-46DVA-GCL adapter and LINK-DV30B kit. *This could result in poor flame appearance, sooting, pilot malfunction, or overheating.*

NOTICE: *To achieve optimum performance of appliance, minimize or avoid bends in exhaust vent pipe.*

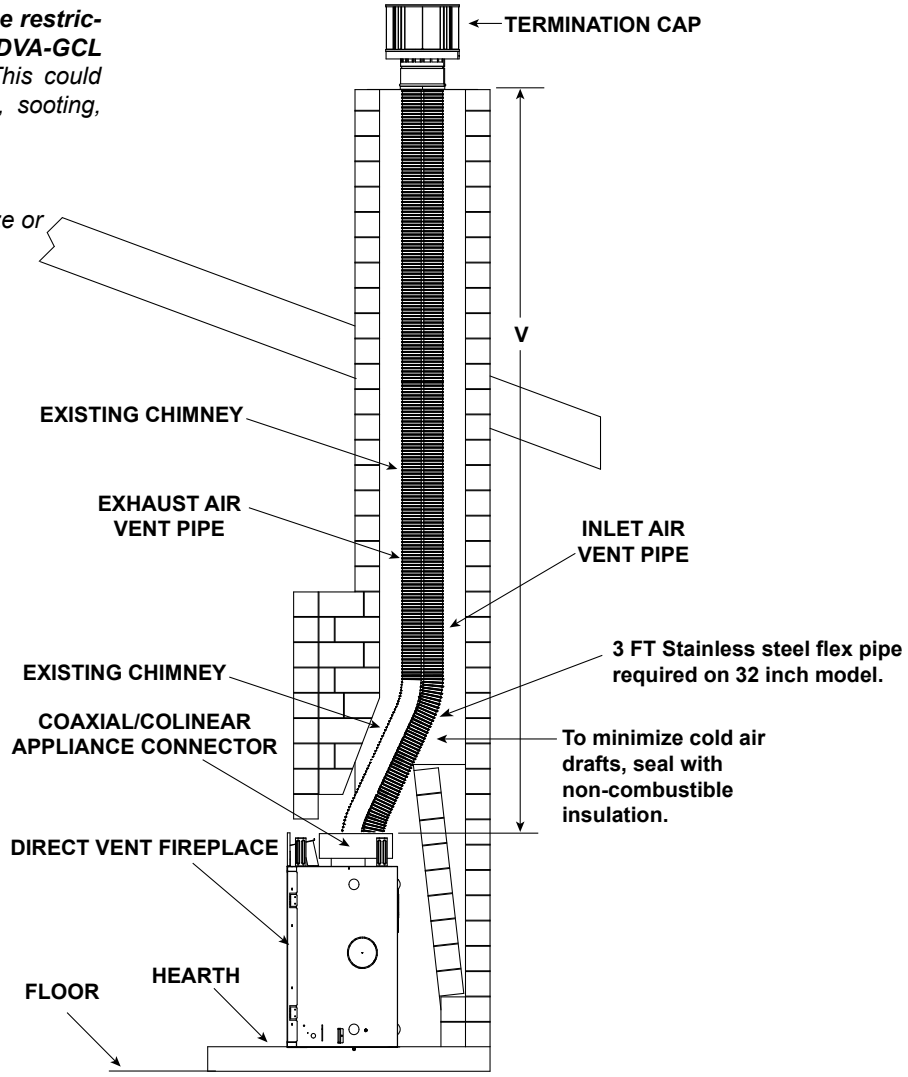

V		
Minimum	10 ft	3.05 m
Maximum	40 ft	12.2 m

Figure 4.23

5 Vent Clearances and Vent Framing

A. Vent Clearances to Combustibles

WARNING! Risk of Fire! *Maintain air space clearance to vent.* ***DO NOT*** *pack insulation or other combustibles:*

- *Between ceiling firestops*
- *Between wall shield firestops*
- *Around vent system*

Failure to keep insulation or other material away from vent pipe could cause overheating and fire.

Note: Heat shields MUST overlap by a minimum of 1-1/2 in. (38 mm).
- **DVP heat shield** - designed to be used on a wall 4 in. to 7-1/4 in. (102 mm to 184 mm) thick.
- If wall thickness is less than 4 in. the existing heat shields must be field trimmed. If wall thickness is greater than 7-1/4 in. a DVP-HSM-B will be required.
- **SLP heat shield** - designed to be used on a wall 4-3/8 in. to 7-5/8 in. (111 mm to 194 mm thick).
- If wall thickness is less than 4-3/8 the existing heat shields must be field trimmed. If wall thickness is greater than 7-5/8 in. a DVP-HSM-B will be required.

(DVP-SLP Pipe Shown)

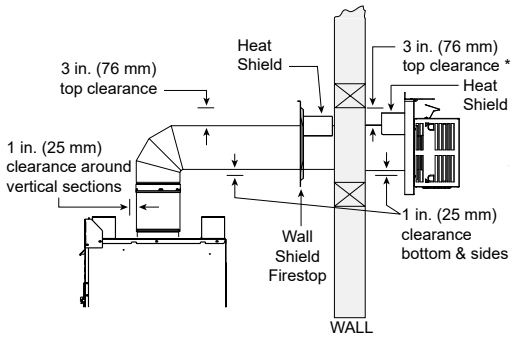

* When using SLP pipe, minimum clearances from the vent pipe to combustible materials at inside wall firestops are:
Top: 2-1/2 in. (64 mm)
Bottom: 1/2 in. (13 mm)
Sides: 1 in. (25 mm)

Figure 5.1 Horizontal Venting Clearances To Combustible Materials

B. Wall Penetration Framing/Firestops

Combustible Wall Penetration

Whenever a combustible wall is penetrated, you must frame a hole for the wall shield firestop(s). The wall shield firestop maintains minimum clearances and prevents cold air infiltration.

- The opening must be framed on all four sides using the same size framing materials as those used in the wall construction.
- SLP pipe - A wall shield firestop must be placed on each side of an interior wall. A minimum 1-1/2 in. (38 mm) overlap of attached heat shields must be maintained.
- See Section 7.F for information for regarding the installation of a horizontal termination cap.

Non-Combustible Wall Penetration

If the hole being penetrated is surrounded by non-combustible materials such as concrete, a hole with diameter one inch greater than the pipe is acceptable.

Whenever a non-combustible wall is penetrated, the wall shield firestop is only required on one side and no heat shield is necessary.

DO NOT PACK VENT FRAMING HOLE WITH INSULATION OR OTHER MATERIAL.

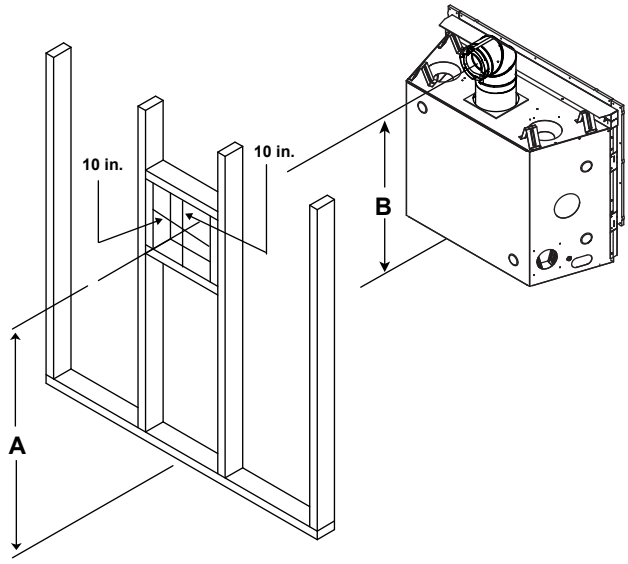

	A*	B
JADE32IN-B	41-1/2 in.	40-1/2 in.
	1054 mm	1029 mm
JADE42IN-B JADE42IL-B	47-1/2	46-1/2
	1207	1181

* Shows center of vent framing hole for top venting. The center of the hole is 1 in. (25 mm) above the center of the horizontal vent pipe.

Note: Center of the horizontal vent pipe to the vertical measuring surface of a trap cap is 5 inches (127 mm).

Figure 5.2 Wall Penetration

C. Ceiling Firestop/Floor Penetration Framing

WARNING! Risk of Fire! DO NOT pack insulation around the vent. Maintain clearances to vent to prevent overheating.

A ceiling firestop **MUST** be used between floors and attics.

- **SLP pipe only** - Frame opening 9 in. x 9 in. (229 mm x 229 mm) whenever the vent penetrates a ceiling/floor (see Figure 5.3).
- Frame the area with the same sized lumber as used in ceiling/floor joist.
- The ceiling firestop may be installed above or below the ceiling joists when installed with an attic insulation shield. It must be under joists between floors that are not insulated. Refer to Figure 5.4.
- Secure in place with nails or screws.

D. Install Attic Insulation Shield

WARNING! Fire Risk. *The use of an attic shield is required to prevent loose materials or insulation from contacting the vent causing overheating and a fire.*

The International Fuel Gas Code requires an attic shield constructed of 26 gauge minimum steel that extends at least 2 in. (51 mm) above insulation.

- Attic insulation shields must meet specified clearances to combustible materials and be secured in place.
- An attic insulation shield kit is available from Hearth & Home Technologies. Contact your dealer to order. Install attic insulation shield according to instructions included with kit.

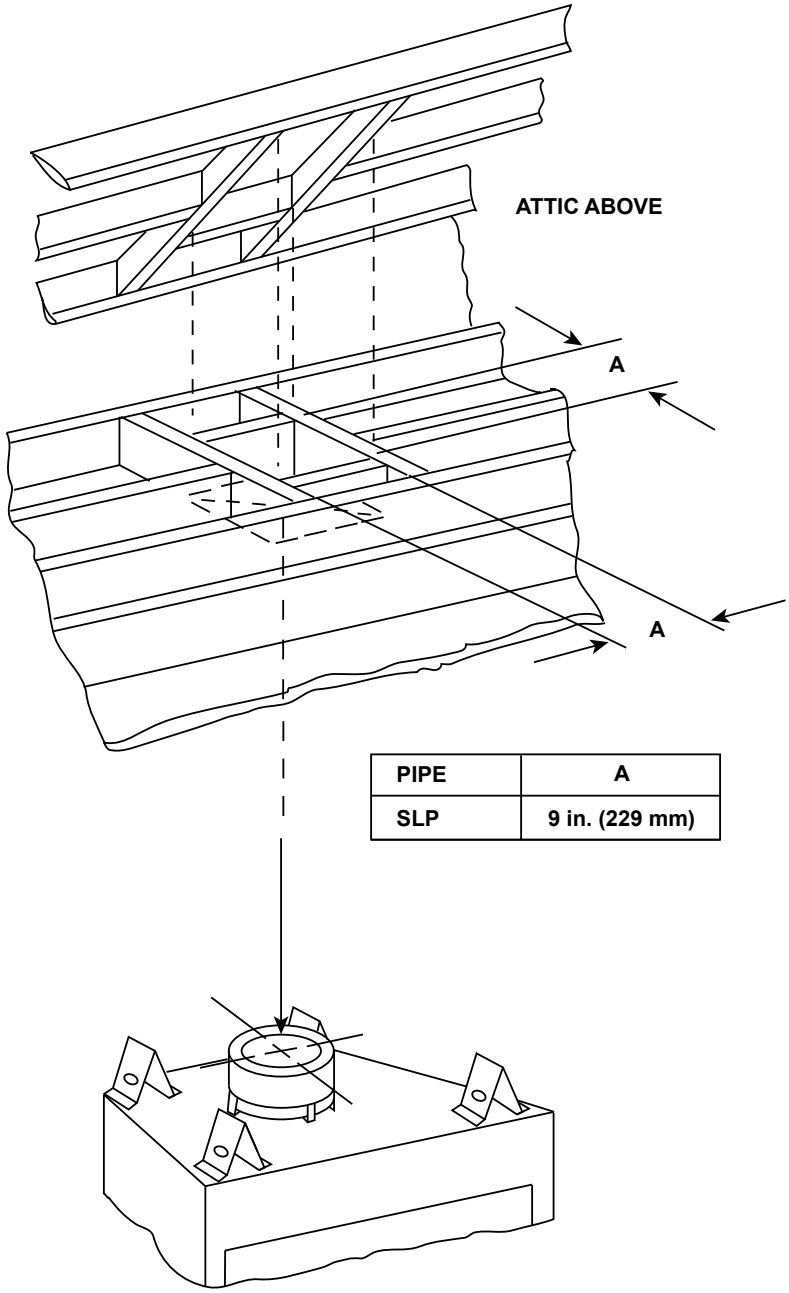

PIPE	A
SLP	9 in. (229 mm)

Figure 5.3 Installing Ceiling Firestop

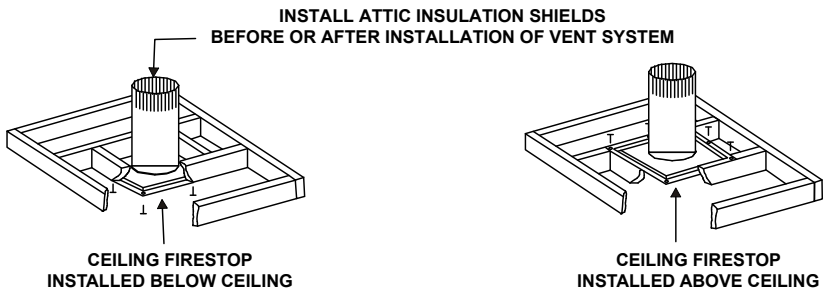

Figure 5.4 Installing the Attic Shield

6 Appliance Preparation

A. Vent Collar Preparation

CAUTION! Risk of Cuts, Abrasions or Flying Debris. *Wear protective gloves and safety glasses during installation. Sheet metal edges are sharp.*

Top Vent

WARNING! Risk of Fire! *Do not remove heat shield. Elevated header temperatures may cause a fire.*

JADE42IN-B / JADE42IL-B

1. Remove two screws and discard. See Figure 6.1.
2. Fold up top heat shield to 90 degrees as shown in Figure 6.2.

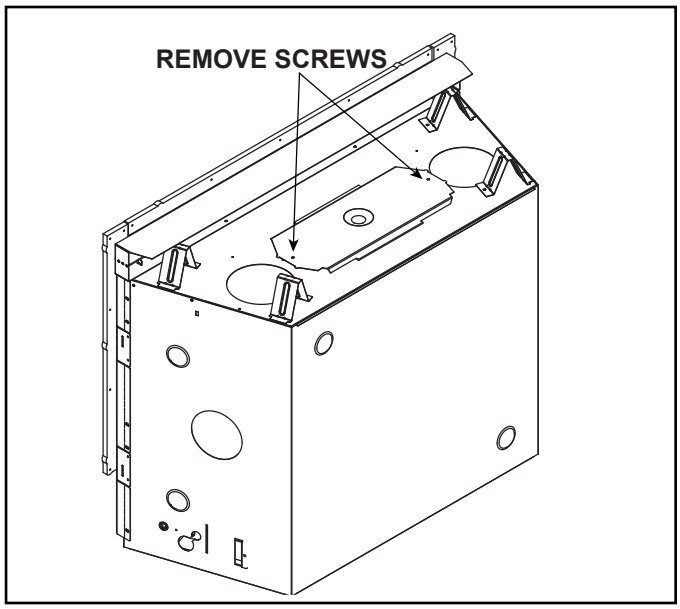

Figure 6.1 JADE42IN-B / JADE42IL-B - Shipping Position

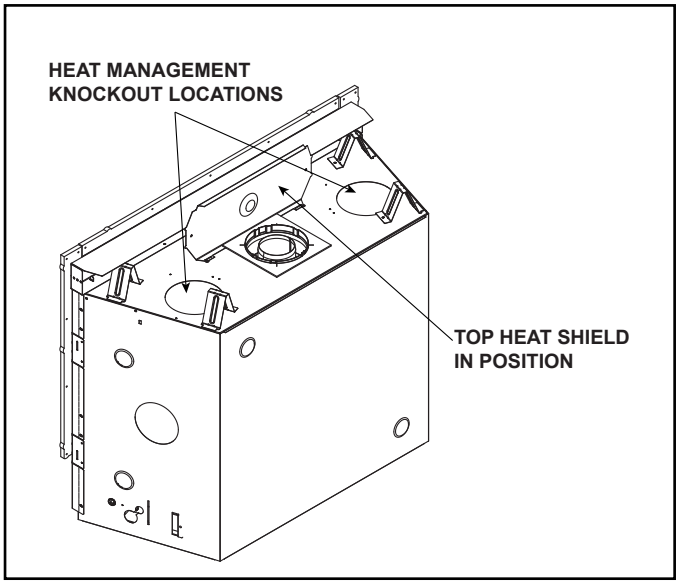

Figure 6.2 JADE42IN-B / JADE42IL-B - Top Heat Shield in Position

JADE32IN-B

1. Remove two screws to remove shipping support. Discard shipping support. See Figure 6.3.
2. Remove and discard seal cap. See Figure 6.4.

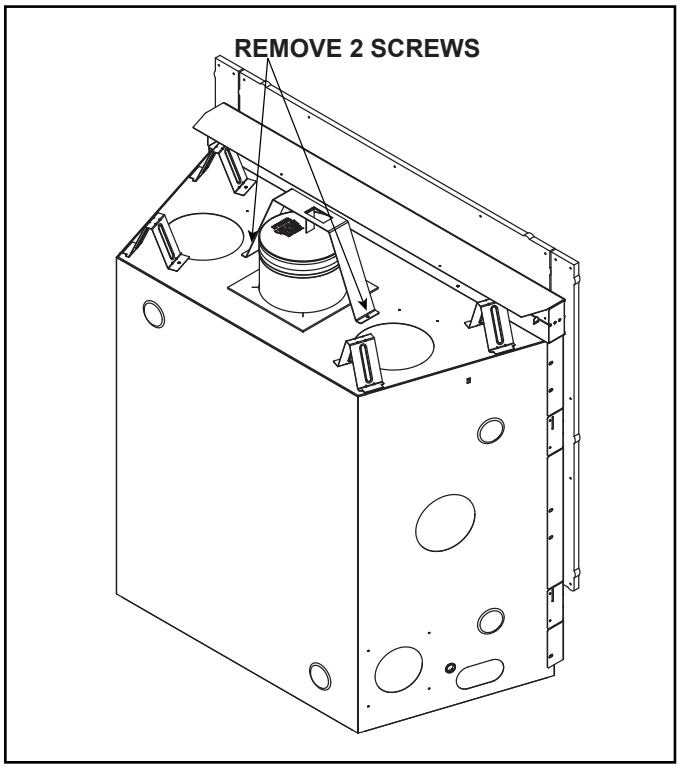

Figure 6.3 JADE32IN-B - Shipping Support in Shipping Position

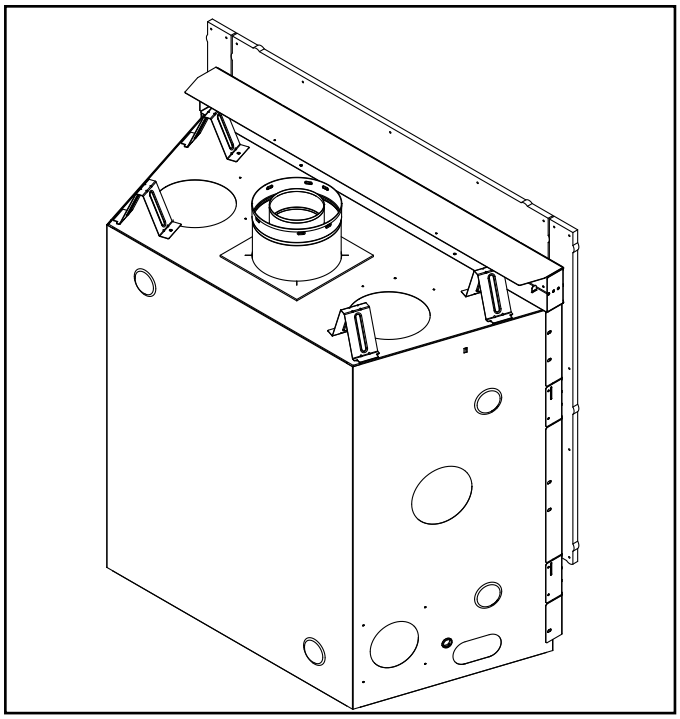

Figure 6.4 JADE32IN-B - Shipping Support and Seal Cap Removed

B. Prepare For Heat Management

Introduction

An optional heat management system allows the heat from the appliance to be redirected as desired.

An optional heat management system must be installed by a qualified service technician at the time of the appliance installation. Follow the instructions shipped with the kit for installation and operation.

NOTICE: *Additional clearances are required for heat management systems installations. Provisions must be made in advance to ensure fit within the framing.*

- Determine the heat management system(s) that will be installed.
- Locate the two heat management ports on the top of the appliance. Either one or two Heat-Zone® -Gas Kits may be installed. See Figure 6.2. Remove the knockouts from the appliance with a tin snips.
- Center the duct collar or passive heat adapter around the exposed hole and attach it to the appliance. See Figure 6.5.

  Note: Do this BEFORE final positioning of the appliance.
- Determine the location for the air register/fan housing assembly.

Reference the Heat-Zone®-Gas Kit, Heat-Out-Gas Kit or Passive Heat instructions for the remaining installation steps.

Heat Management System options are:

- HEAT-ZONE®-GAS: The heat is diverted into an adjacent room.
- HEAT-OUT-GAS: The heat is diverted outside the home/building.
- Passive Heat (PH-LINEAR): The heat is vented into the room in which the appliance is installed through a discharge opening(s).

The JADE32IN-B, JADE42IN-B and JADE42IL-B models may utilize two Heat Management Systems, but not all are compatible.

The HEAT-OUT-GAS kit may be used with either HEAT-ZONE®-GAS or one of the Passive Heat options.

Passive Heat may be used with HEAT-OUT-GAS or one HEAT-ZONE®-GAS. The dedicated knockouts, as shown in Figure 6.5, must be used only as indicated. Passive Heat cannot be used with an optional fan.

WARNING! Risk of Fire! *DO NOT block passive heat registers! Overheating of appliance and combustible materials will occur.*

WARNING! Risk of Fire! *DO NOT remove a knockout unless a heat management system will be installed in its place. Appliance and combustible materials will overheat.*

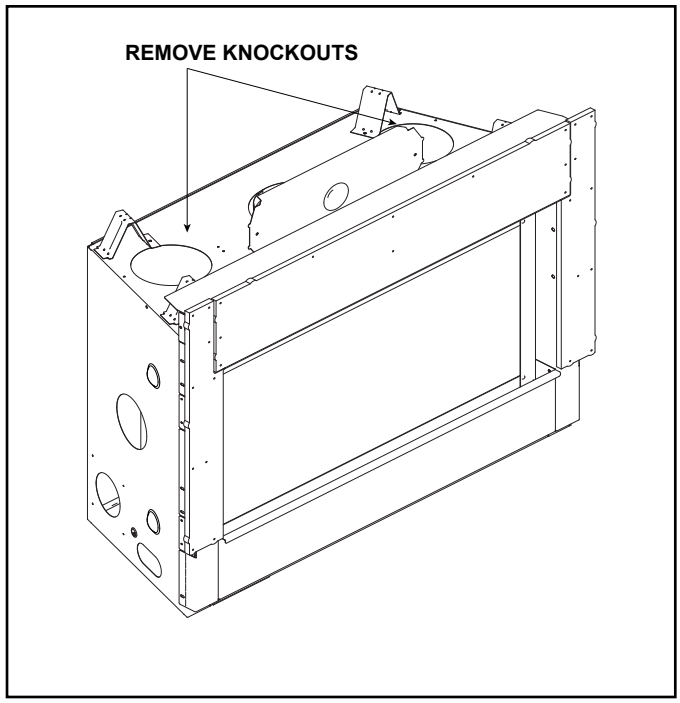

Figure 6.5 Proper Positioning, Leveling And Securing Of Appliance

C. Securing and Leveling the Appliance

⚠ WARNING

Risk of Fire!

Prevent contact with:

- *Sagging or loose insulation*
- *Insulation backing or plastic*
- *Framing and other combustible materials*

***DO NOT remove standoffs or** notch the framing around the appliance standoffs.*

Failure to maintain air space clearance could cause overheating and fire.

Block openings into the chase to prevent entry of blown-in insulation. Make sure insulation and other materials are secured.

The JADE32IN-B, JADE42IL-B and JADE42IN-B models ship with factory-installed non-combustible board. This board must be used. Do NOT remove. See Figure 6.6.

Figure 6.6 shows how to properly position and secure the appliance. Nailing tabs are provided to secure the appliance to the framing members.

- Bend out nailing tabs on each side.
- Place the appliance into position.
- Keep nailing tabs flush with the framing.
- Level the appliance from side to side and front to back.
- Shim the appliance as necessary. It is acceptable to use wood shims underneath the appliance.
- Secure the appliance to the framing by using nails or screws through the nailing tabs. Use a minimum of one fastener per nailing tab.
- Optional: Secure the appliance to the floor by inserting two screws through the pilot holes at the bottom of the appliance.

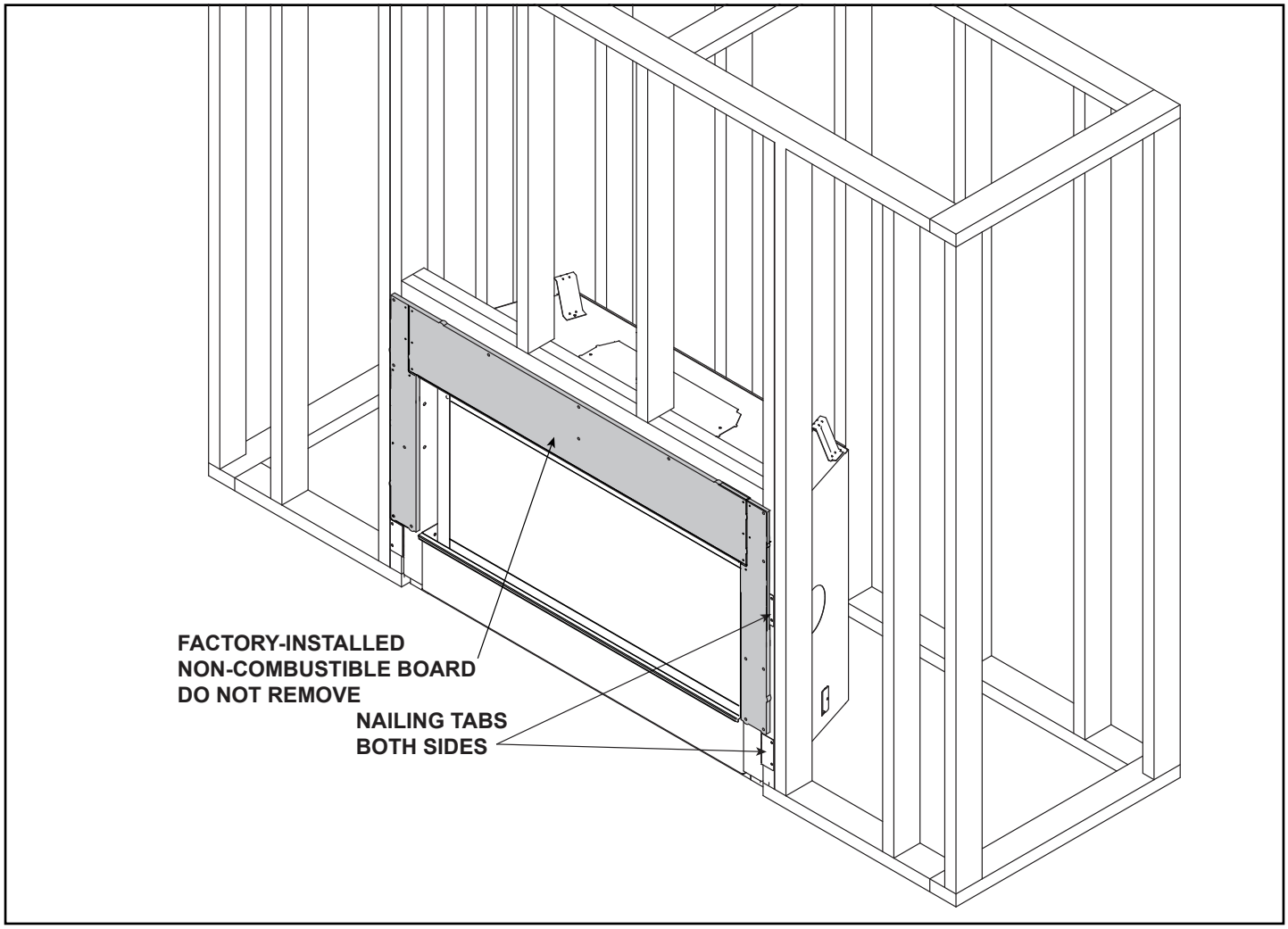

Figure 6.6 Proper Positioning, Leveling And Securing Of Appliance

D. Non-Combustible Material Installation

WARNING! Risk of Fire! *DO NOT remove factory-installed non-combustible material.*

This model ships with the required top, left and right non-combustible board. The top non-combustible board has been pre-installed at the factory with three screws. The left and right side non-combustible boards are shipped next to the non-combustible board inside the cardboard splatter guard in front of the appliance. See Figure 6.7.

1. Remove the left and right non-combustible components from the shipping position and set aside.
2. Pivot the lower cover panel down by lifting the lower cover panel "up" and then rotating the top downward.
3. Locate the manual bag assembly inside the appliance and remove the small package containing the 1-1/2 inch Phillips screws.

Note: Care should be taken when installing screws into the non-combustible board. DO NOT overtighten screws. Screws should be set "flush" to the surface of the non-combustible board.

4. Further secure the top non-combustible board by installing screws into the pilot holes located in the upper left and right corners of the top non-combustible board as shown in Figure 6.8.
5. Install the left and right non-combustible components with four of the provided Phillips screws. See Figure 6.8. After all non-combustible material has been installed, remove the small package of sheet metal screws from the manual bag. Reinstall the lower cover panel. Be sure to "hook" it onto the appliance. Use two screws from the package to fasten the top sides of the cover panel to the appliance. The holes from the cover panel should align with the holes in the sides of the appliance. See Figure 6.7.
6. Install drywall screws (not provided) around the perimeter of the installed non-combustible components to secure it to the framing material. Refer to Section 10 for more information.

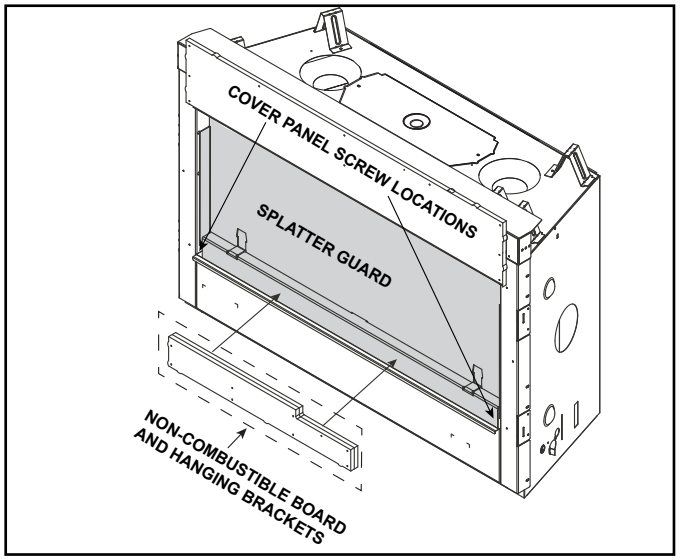

Figure 6.7 Shipping Position - Non-Combustible Sides and Auxiliary Hanging Brackets

E. Auxiliary Hanging Bracket Installation

The left and right auxiliary hanging brackets are shipped attached to the appliance.

1. Loosen both shoulder bolts on each auxiliary hanging bracket. See Figure 6.8 and Figure 6.9. Pull the brackets away from the appliance to aid with finishing material installation.
2. Keep brackets attached to the appliance until ready for front installation.

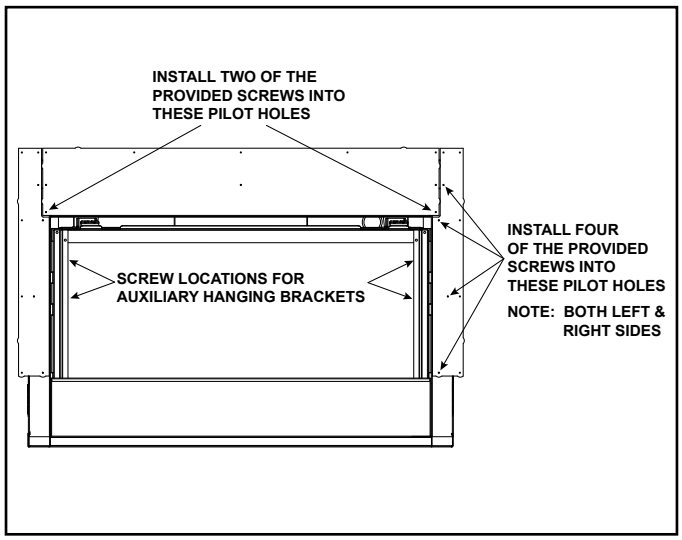

Figure 6.8 Installation of the Side Non-Combustible Components

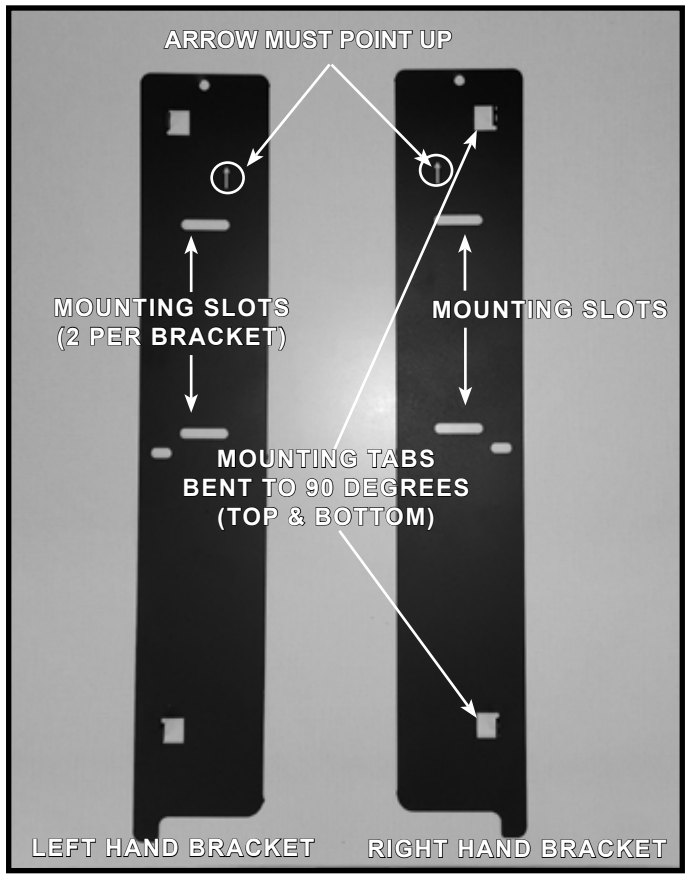

Figure 6.9 Auxiliary Hanging Brackets

7 Venting

A . Assemble Vent Sections (SLP Only)

WARNING! Risk of Fire or Explosion! *Vent sections MUST be installed correctly. Improperly installed vent sections could leak or cause appliance to overheat.*

To attach the first vent component to the starting collars of the appliance:

- Lock the vent components into place by sliding the pipe section onto the collar.
- Align the seam of the pipe and seam of collar to allow engagement. Rotate the vent component to lock into place. Use this procedure for all vent components. See Figure 7.1.
- Slide the gasket over the first vent section and place it flush to the appliance. This will prevent cold air infiltration. Caulk with a minimum of 300 ºF continuous exposure rating may be used to hold the part in place.
- Continue adding vent components, locking each succeeding component into place.
- Ensure that each succeeding vent component is securely fitted and locked into the preceding component.

It is acceptable to use screws no longer than 1/2 in. (13 mm) to hold outer pipe sections together. If predrilling holes, **DO NOT** penetrate inner pipe.

Requirement for Commercial, Multi-family (Multi-level exceeding two stories), or High-Rise Applications

All outer pipe joints must be sealed using one of the methods below, including the slip section that connects directly to the horizontal termination cap.

- Apply a bead of silicone sealant (300 ºF minimum continuous exposure rating) inside the female outer pipe joint prior to joining sections. See Figure 7.1 **OR**

  Apply a bead of silicone sealant (300 ºF minimum continuous exposure rating) to the outside of connecting joint after joining sections **OR**

  Apply aluminum foil tape (300 ºF minimum continuous exposure rating) to the outside of connecting joint after joining sections. On horizontal pipe runs, it is recommended that the tape seam is positioned on the bottom side of the vent pipe.
- Only outer pipes need to be sealed. All unit collar, pipe, slip section, elbow and cap outer flues shall be sealed in this manner, unless otherwise stated.

Figure 7.1 High Temperature Silicone Sealant

WARNING! Risk of Fire or Explosion! DO NOT *break silicone seals on slip sections. Use care when removing termination cap from slip pipe. If slip section seals are broken during removal of the termination cap, vent could leak.*

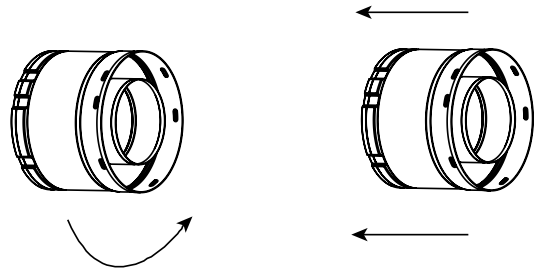

Note: Align seams to engage pipe, then rotate counterclockwise to lock

Figure 7.2 Adding Venting Components

B. Assemble Slip Sections

- Slide the inner flue of the slip section into the inner flue of the pipe section and the outer flue of the slip section over the outer flue of the pipe section. See Figure 7.3.
- Slide together to the desired length.

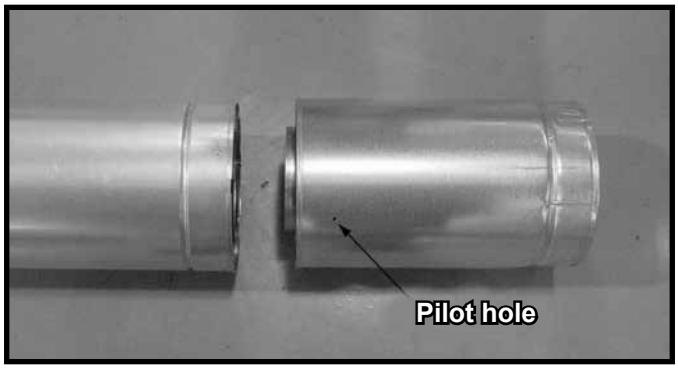

Figure 7.3 Slip Section Pilot Holes

- Maintain a 1-1/2 in. (38 mm) overlap between the slip section and the pipe section.
- Secure the pipe and slip section with two screws no longer than 1/2 in. (13 mm), using the pilot holes in the slip section. See Figure 7.4.

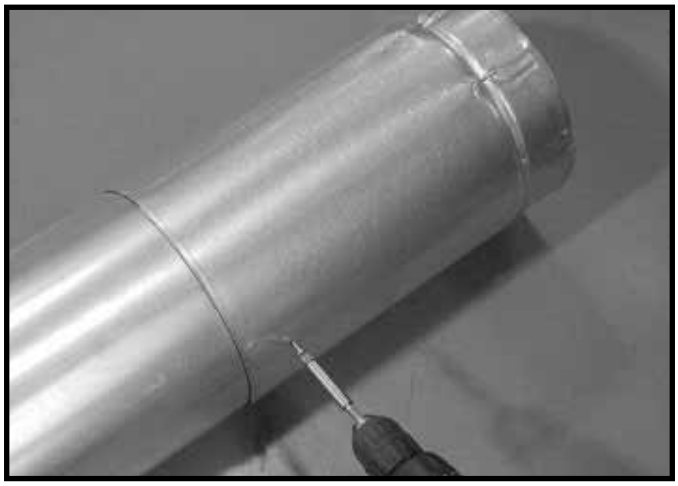

Figure 7.4 Screws into Slip Section

- Continue adding pipe as necessary following instructions in “Assembling Pipe Sections.”

NOTICE: *If slip section is too long, the inner and outer flues of the slip section can be cut to the desired length.*

C. Secure the Vent Sections

WARNING! Risk of Fire, Explosion or Asphyxiation! *Improper support could allow vent to sag and separate. Use vent run supports and connect vent sections per installation instructions.* ***DO NOT*** *allow vent to sag below connection point to appliance.*

- Vertical runs originating off the top of the appliance, with no offsets, must be supported every 8 feet (2.44 m) after the maximum allowed 25 feet (7.62 m) of unsupported rise.
- Vertical runs originating off the rear of the appliance, or after any elbow, must be supported every 8 feet (2.44 m).
- Horizontal runs must be supported every 5 feet (1.52 m).
- Vent supports or plumbers strap (spaced 120º apart) may be used to support vent sections. See Figures 7.5 and 7.6.
- Wall shield firestops may be used to provide horizontal support to vent sections.
- SLP ceiling firestops have tabs that may be used to provide vertical support.

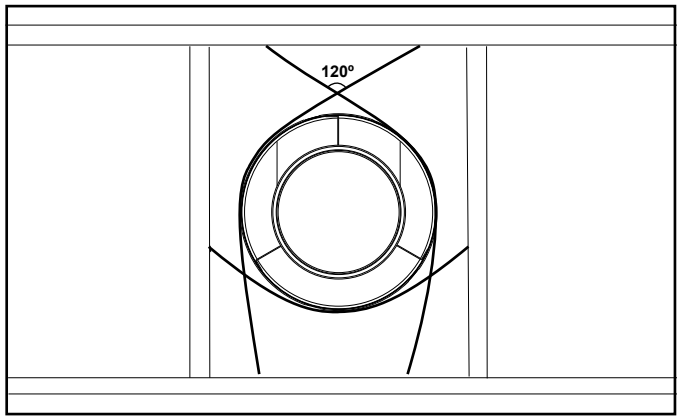

Figure 7.5 Securing Vertical Pipe Sections

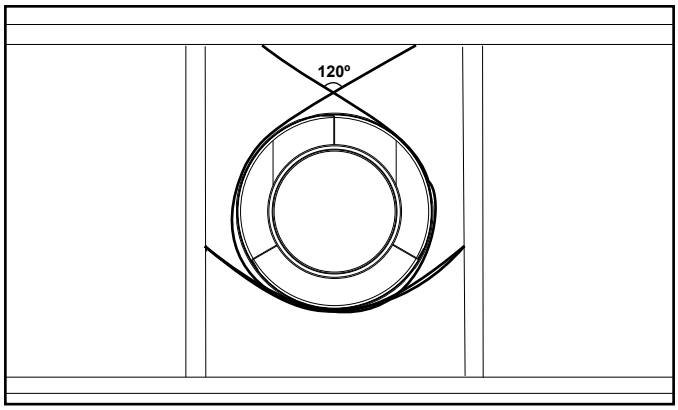

Figure 7.6 Securing Horizontal Pipe Sections

D. Disassemble Vent Sections

- Rotate either section (see Figure 7.7) so the seams on both pipe sections are aligned as shown in Figure 7.8.
- Pull carefully to separate the pieces of pipe.

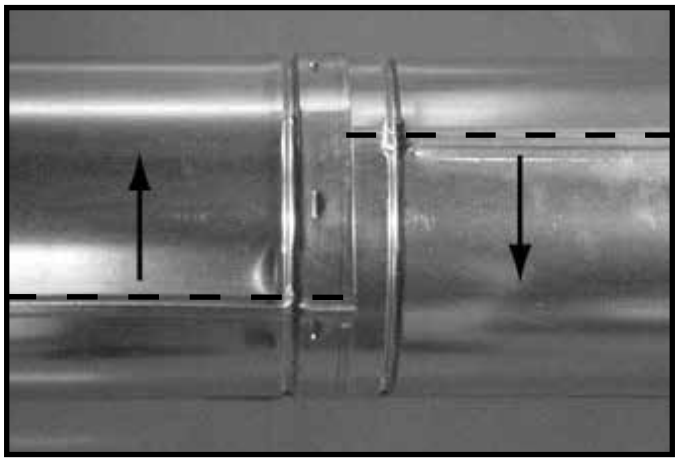

Figure 7.7 Rotate Seams for Disassembly

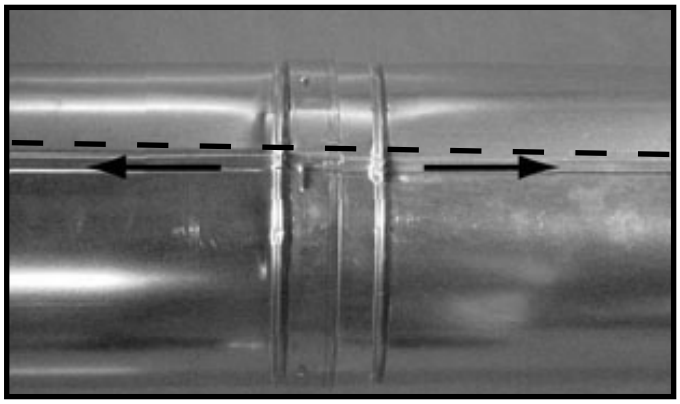

Figure 7.8 Align and Disassemble Vent Sections

E. Vertical Termination Requirements

Install and Seal Metal Roof Flashing

- See minimum vent heights for various pitched roofs (Section 4, Figure 4.1) to determine the length of pipe to extend through the roof.
- Slide the roof flashing over the pipe sections extending through the roof as shown in Figure 7.9.
- Use an elastomeric or silicone sealant with a minimum of 150 ºF temperature rating to seal the metal roof flashing.

Note: When installing a silicone or EPDM pipe flashing boot on a metal roof, it is recommended to put a bead of 100% silicone sealant where the boot contacts the vent pipe to prevent the entry of water. Follow the manufacturer's recommendations when installing the boot.

NOTICE: *Failure to properly seal the roof flashing and pipe seams could permit entry of water.*

- Seal the gap between the roof flashing and the outside diameter of the pipe.
- Seal the perimeter of the flashing where it contacts the roof surface. See Figure 7.9.
- Seal the exposed pipe section seams that are located above the roof.

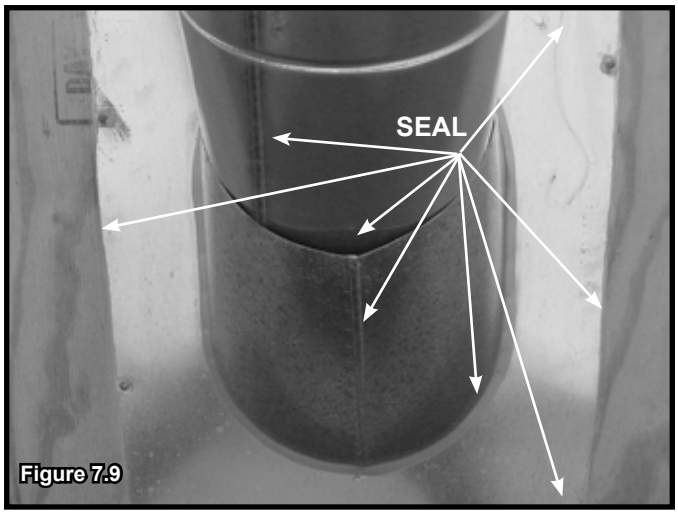

Figure 7.9

Assemble and Install Storm Collar

CAUTION! Risk of Cuts, Abrasions or Flying Debris. *Wear protective gloves and safety glasses during installation. Sheet metal edges are sharp.*

- Slide the storm collar onto the exposed pipe section and align brackets.
- Insert a bolt (provided) through the brackets and install nut. Do not completely tighten.

Figure 7.10 Insert Bolt into Brackets

- Slide the assembled storm collar down the pipe section until it rests on the roof flashing. See Figure 7.10.
- Tighten nut and make sure the collar is tight against the pipe section.
- Seal around the top of the storm collar. See Figure 7.11.

Install Vertical Termination Cap

- Attach the vertical termination cap by sliding the inner collar of the cap into the inner flue of the pipe section while placing the outer collar of the cap over the outer flue of the pipe section.
- Secure the cap by driving three self-tapping screws (supplied) through the pilot holes in the outer collar of the cap into the outer flue of the pipe. See Figure 7.11.

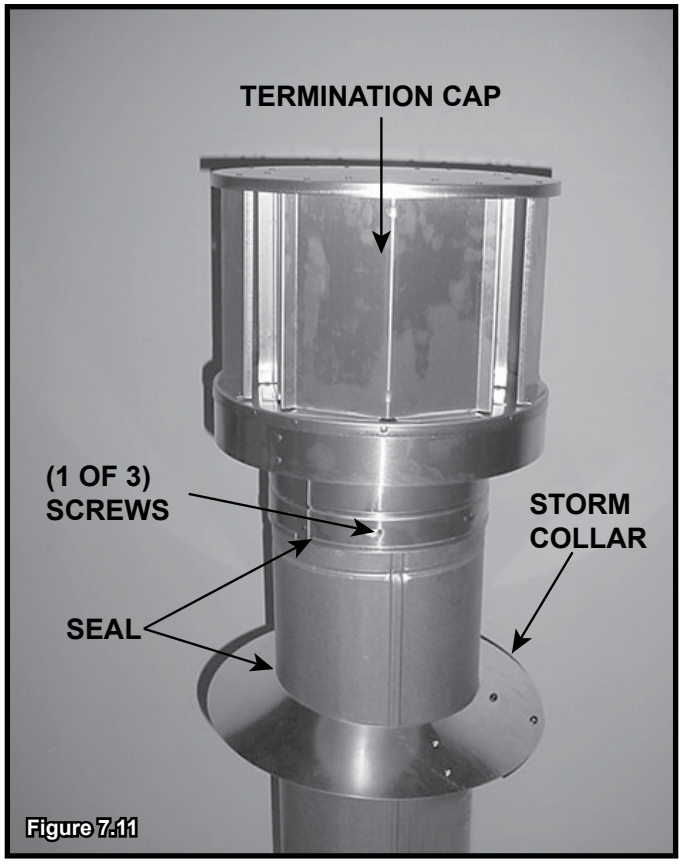

Figure 7.11

F. Horizontal Termination Requirements

Heat Shield Requirements for Horizontal Termination

WARNING! Risk of Fire! *To prevent overheating and fire, heat shields must extend through the entire wall thickness.*

- ***DO NOT*** *remove the heat shields attached to the wall shield firestop and the horizontal termination cap (shown in Figure 7.12).*
- *Heat shields must overlap 1-1/2 in. (38 mm) minimum.*

There are two sections of the heat shield. One section is factory-attached to the wall shield firestop. The other section is factory-attached to the cap. See Figure 7.12.

If the wall thickness does not allow the required 1-1/2 in. (38 mm) heat shield overlap when installed, an extended heat shield must be used.

- If the wall thickness is less than 4 in./102 mm (DVP) or 4-3/8 in./ 111 mm (SLP), the heat shields on the cap and wall shield firestop must be trimmed. A minimum 1-1/2 in. (38 mm) overlap MUST be maintained.
- Use an extended heat shield if the finished wall thickness is greater than 7-1/4 in. (184 mm).
- The extended heat shield may need to be cut to length maintaining sufficient length for a 1-1/2 in. (38 mm) overlap between heat shields.
- Attach the extended heat shield to either of the existing heat shields using the screws supplied with the extended heat shield. Refer to vent components diagrams in the back of this manual.
- Rest the small leg on the extended heat shield on top of the pipe section to properly space it from the pipe section.

Important Notice: Heat shields may not be field constructed.

Install Horizontal Termination Cap (SLP Pipe)

WARNING! Risk of Fire! *The telescoping flue section of the termination cap MUST be used when connecting vent.*

- *1-1/2 (38 mm) minimum overlap of flue telescoping section is required.*

Failure to maintain overlap could cause overheating and fire.

- Vent termination must not be recessed in the wall. Siding may be brought to the edge of the cap base.
- Flash and seal as appropriate for siding material at outside edges of cap.
- When installing a horizontal termination cap, follow the cap location guidelines as prescribed by current **ANSI Z223.1** and **CAN/CGA-B149** installation codes and refer to Section 4 of this manual.

CAUTION! Risk of Burns! *Local codes may require installation of a cap shield to prevent anything or anyone from touching the hot cap.*

Note: When using termination caps with factory-supplied heat shield attached, no additional wall shield firestop is required on the exterior side of a combustible wall.

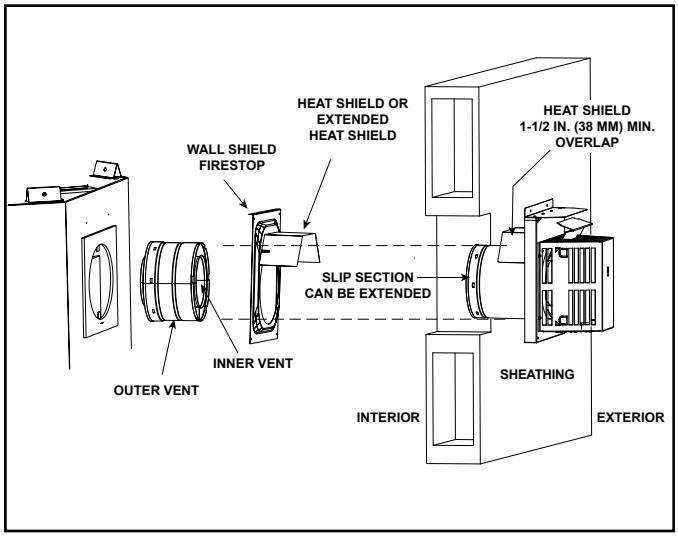

Figure 7.12 Venting Through the Wall

8 Electrical Information

A. General Information

***WARNING! Risk of Shock! DO NOT** wire 110-120 VAC to the ignition module or to the appliance wall switch.*

Incorrect wiring will damage controls.

***NOTICE:** This appliance must be electrically wired and grounded in accordance with local codes or, in the absence of local codes, with* **National Electric Code ANSI/NFPA 70-latest edition** *or the* **Canadian Electric Code CSA C22.1.**

- Wire the appliance circuit using a minimum 14-2 AWG with ground to unswitched 110-120 VAC. This is required for proper operation of the appliance (IntelliFire® ignition).
- A 110-120 VAC circuit for this product must be protected with ground-fault circuit interrupter protection, in compliance with the applicable electrical codes, when it is installed in locations such as in bathrooms or near sinks.
- Low voltage and 110-120 VAC voltage cannot be shared within the same wall box.
- In some instances, the spark ignition of the fireplace may cause intermittent, non-damaging, interference during the lighting sequence with a TV plugged into the same circuit. It is recommended that the fireplace and TV use different circuits to mitigate the interference potential. If interference is occurring on the same circuit, the use of surge protectors may help alleviate the interference.

Valve/Control Access

Prior to installation of finishing material, the valve/control cavity is accessible by lifting the lower access panel slightly to “unhook” it from the appliance and then rotating the top of the lower access panel downward.

Once the installation of the finishing material is completed, the top sides of the access panel are to be fastened with sheet metal screws from the manual bag. See Figure 8.1.

Once finishing material has been installed, access to the valve/control cavity is limited to access through the firebox, see Section 9.B.

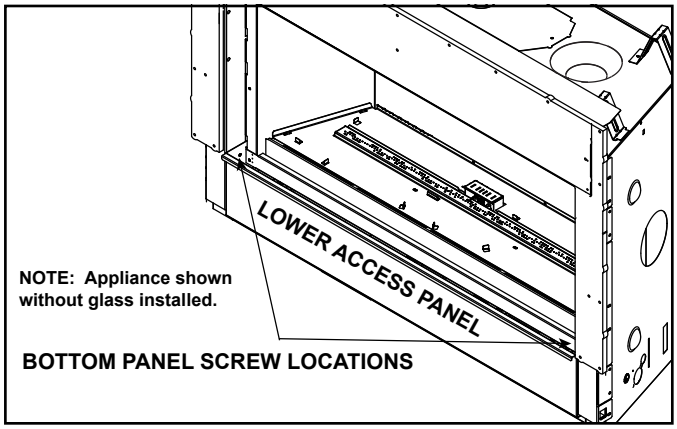

Figure 8.1 Remove Lower Access Panel

Junction Box Installation

If the box is being wired from the INSIDE of the appliance:

JADE42IN-B / JADE42IL-B: The junction box is secured to a bracket. Remove one screw. See Figure 8.2.

JADE32IN-B: The junction box is secured to the fireplace outer wrap. Remove one screw. See Figure 8.3.

- Pull the electrical wires from outside the appliance through the opening into the valve compartment and secure wires with a Romex connector. See Figure 8.4.
- Make all necessary wire connections to the junction box/receptacle and reattach the junction box/receptacle to the outer shell (JADE32IN-B) or bracket (JADE42IN-B/JADE42IL-B).

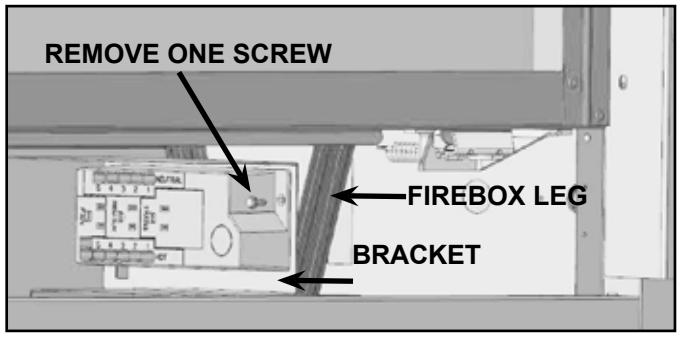

Figure 8.2 Junction Box Detail - JADE42IN-B, JADE42IL-B

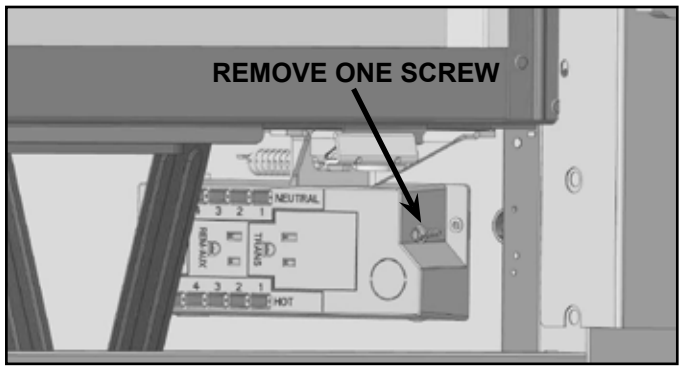

Figure 8.3 Junction Box Detail - JADE32IN-B

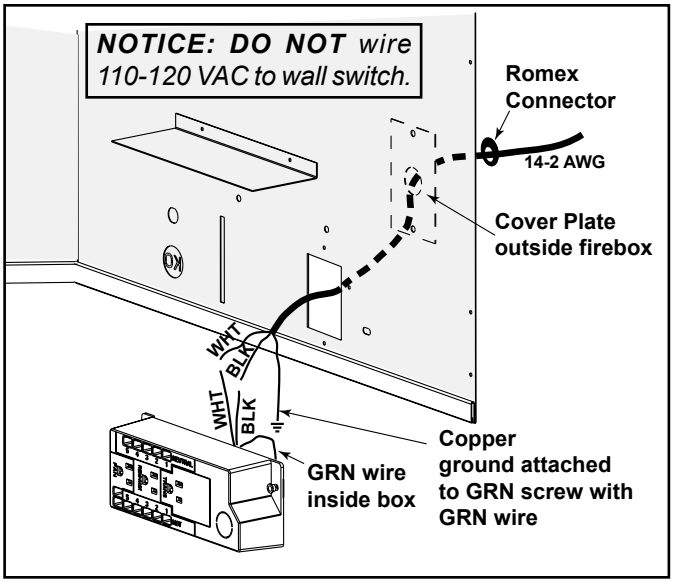

Figure 8.4 Junction Box Detail (Generic Model Shown)

Accessories Requirements

- This appliance may be used with a wall switch, wall mounted thermostat and/or a remote control.

Wiring for optional Hearth & Home Technologies approved accessories should be done now to avoid reconstruction. Follow instructions that come with those accessories.

Electrical Service and Repair

WARNING! Risk of Shock! *Label all wires prior to disconnection when servicing controls. Wiring errors could cause improper and dangerous operation. Verify proper operation after servicing.*

WARNING! Risk of Shock! *Replace damaged wire with type 105º C rated wire. Wire must have high temperature insulation.*

B. Wiring Requirements

IntelliFire Touch® Ignition System Wiring

- Wire the appliance junction box to 110-120 VAC for proper operation of the appliance.

WARNING! Risk of Shock or Explosion! DO NOT *wire IPI controlled appliance junction box to a switched circuit. Incorrect wiring will override IPI safety lockout.*

- Refer to Figures 8.5, 8.6, and 8.7, IntelliFire Touch (IPI) Wiring Diagrams.
- This appliance is equipped with an IntelliFire Touch control valve which operates on a 6 volt/1.5 AMP system.
- Plug the 6 volt transformer plug into the appliance junction box to supply power to the unit OR install 4 AA cell batteries (not included) into the battery pack before use.

NOTICE: *Batteries should only be used as a power source in the event of an emergency power outage. Batteries should not be used as a primary long-term power source. Batteries tend to corrode over time. When using batteries as a power source, the* 6 *volt transformer must be unplugged from the receptacle.*

Do not store batteries in the battery pack when the appliance is powered by the 6 volt transformer connected to permanent electrical service

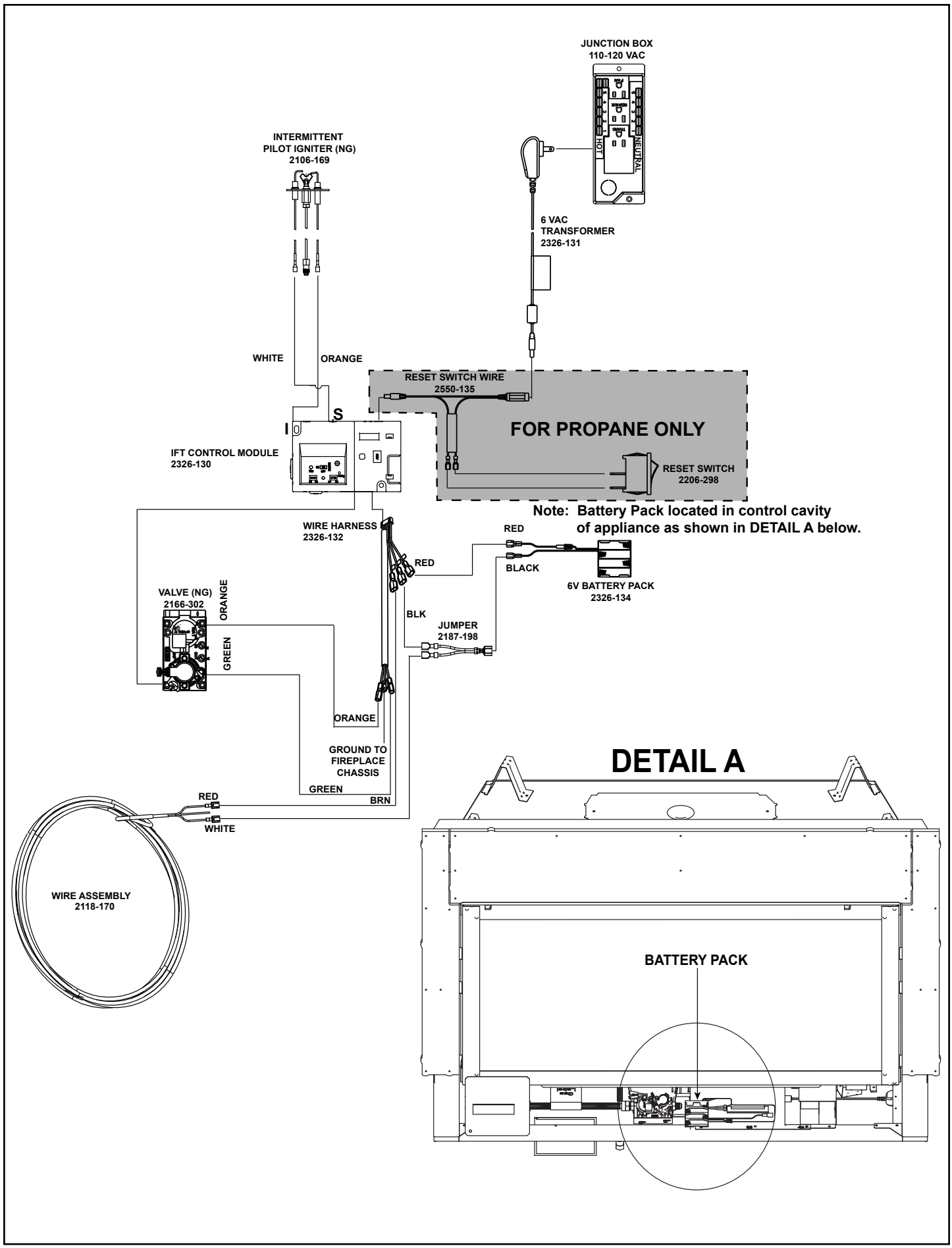

Figure 8.5 Intellifire Touch Wiring Diagram - Standard

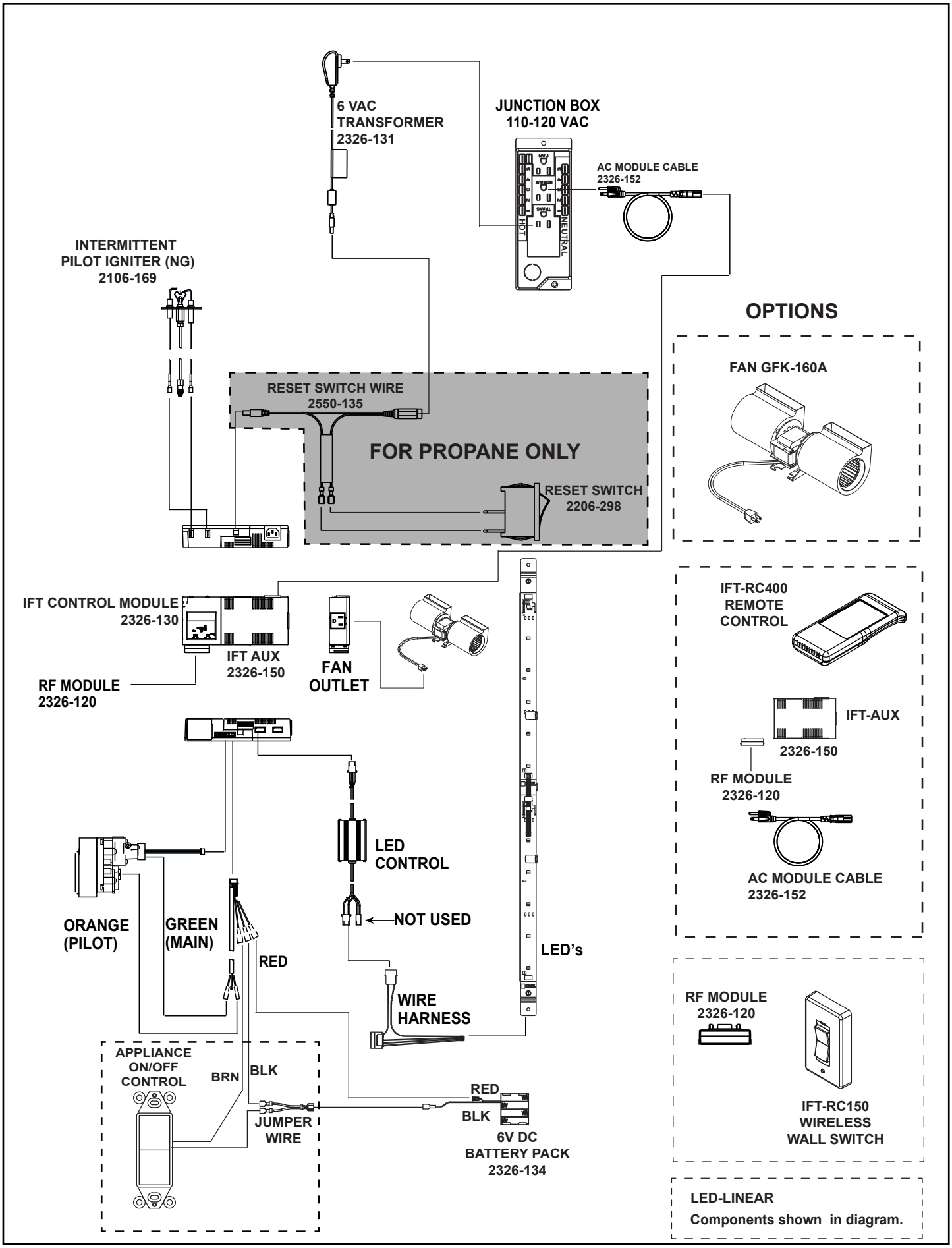

Figure 8.6 Intellifire Touch Wiring Diagram with Remote, Fan and LED Options

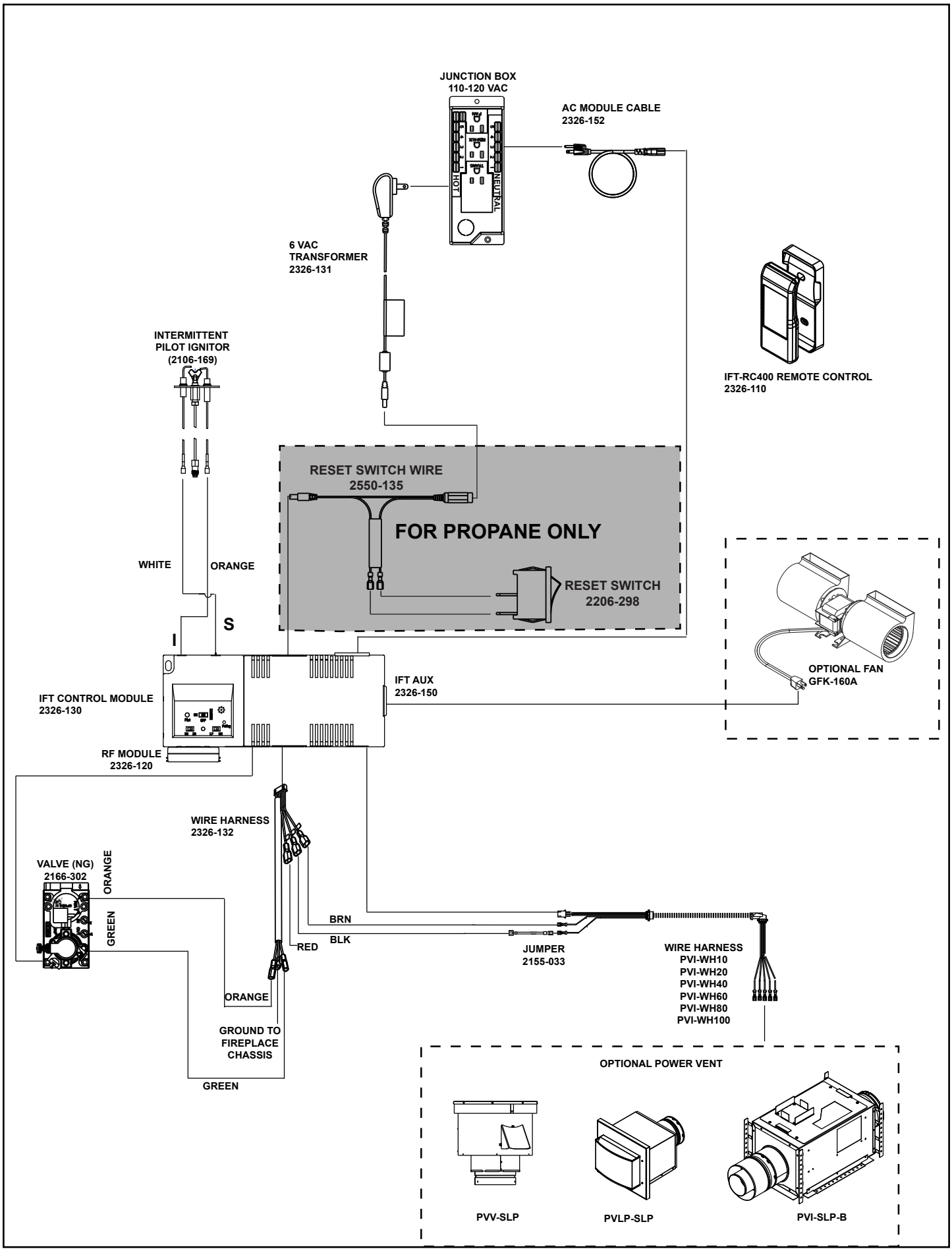

Figure 8.7 Intellifire Touch Wiring Diagram with Power Vent Diagram

Wall Switch Installation for Fan (Optional)

If the box is being wired to a wall mounted switch for use with a fan. See Figure 8.8:

- The power supply for the appliance must be brought into a switch box.
- The power can then be supplied from the switch box to the appliance using a minimum of 14-3 with ground wire.
- At the switch box connect the black (hot) wire and red (switch leg) wire to the wall switch as shown.
- At the appliance connect the black (hot), white (neutral) and green (ground) wires to the junction box as shown.
- Add a 1/4 inch insulated female connector to the red (switch leg) wire, route it through the knockout in the face of the junction box, and connect to the top fan switch connector (1/4 inch male) as shown.

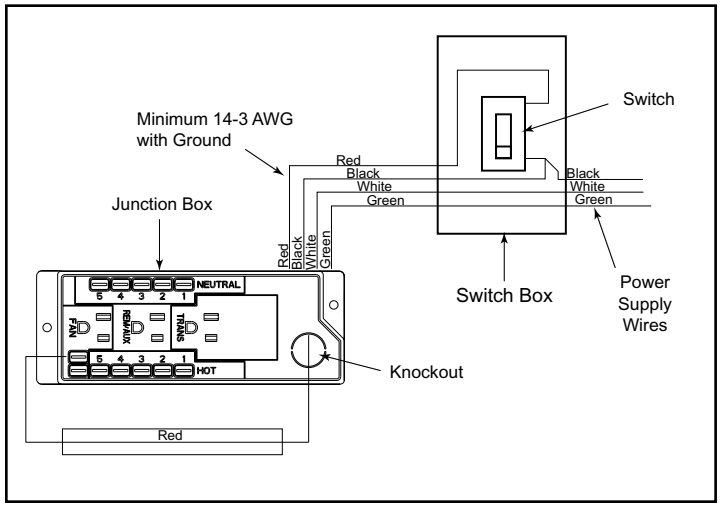

Figure 8.8 Junction Box Wired to Wall Switch

9 Gas Information

A. Fuel Conversion

- Make sure the appliance is compatible with available gas types.
- Conversions must be made by a qualified service technician using Hearth & Home Technologies specified and approved parts.

B. Gas Pressure

⚠ WARNING

Fire Risk.

Risk of Fire! Risk of Explosion!

Incorrect pressure will damage valve.

- Isolate gas supply piping BEFORE pressure testing gas line at test pressures above 1/2 psig.
- Close the manual shutoff valve BEFORE pressure testing gas line at test pressures equal to or less than 1/2 psig.

- Optimum appliance performance requires proper input pressures.
- Gas line sizing requirements will be determined in ANSI Z223.1 National Fuel Gas Code in the USA and CAN/CGA B149 in Canada.
- Pressure requirements when in operation are:

Gas Pressure	Natural Gas	Propane
Minimum inlet pressure	5.0 in. w.c.	11.0 in. w.c.
Maximum inlet pressure	10.0 in. w.c.	13.0 in. w.c.
Manifold pressure	3.5 in. w.c.	10.0 in. w.c.

- Verify inlet pressures. Verify minimum pressures when other household gas appliances are operating.
- Install regulator upstream of valve if line pressure is greater than 1/2 psig.

Note: Have the gas supply line installed in accordance with local codes, if any. If not, follow ANSI Z223.1. Installation should be done by a qualified installer approved and/or licensed as required by the locality. (In the Commonwealth of Massachusetts installation must be performed by a licensed plumber or gas fitter).

Note: A listed (and Commonwealth of Massachusetts approved) 1/2 in. (13 mm) T-handle manual shut-off valve and flexible gas connector are connected to the 1/2 in. (13 mm) control valve inlet.

- **If substituting for these components, please consult local codes for compliance.**

Access Through the Control Cavity (For Service/Conversion)

The lower access cover panel pivots down if finishing material has not been previously installed. See Section 8.A for removal instructions.

Access Through the Valve Assembly (For Service/Conversion)

1. Locate and remove the two screws that secure the basepan to the appliance. See Figure 9.1. Remove basepan. Retain screws.

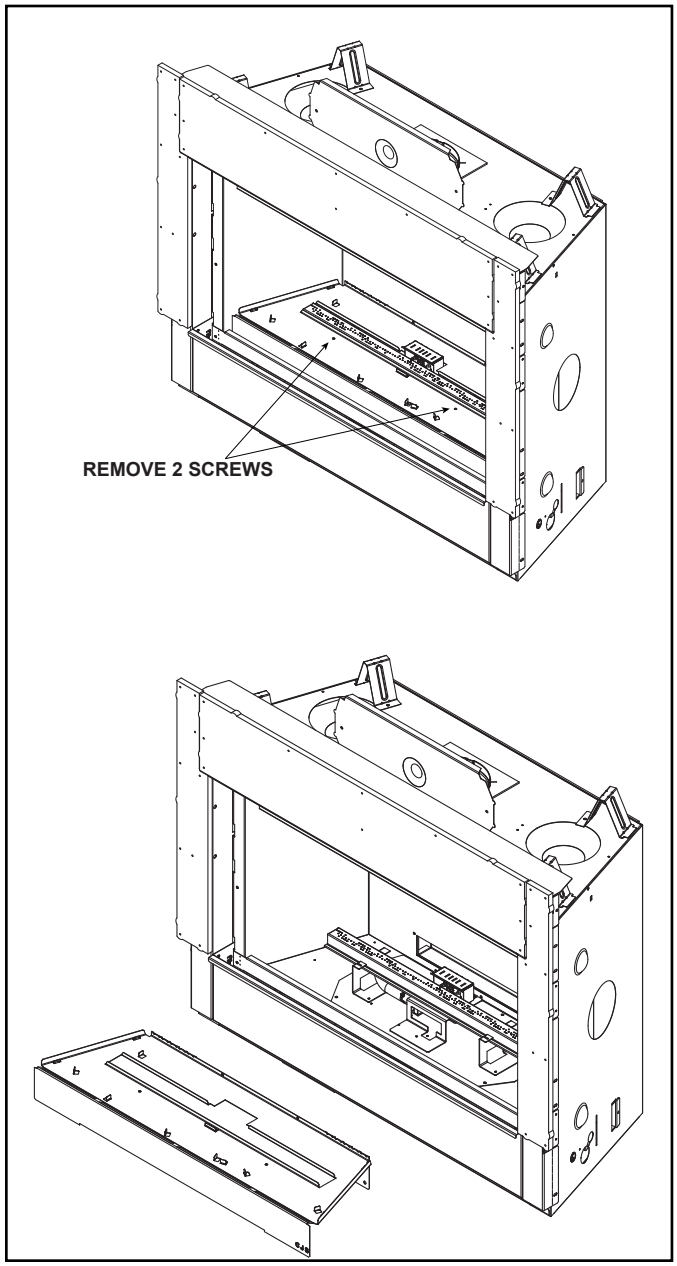

Figure 9.1 Basepan Removal - JADE42IN-B Shown

2. Remove the two screws that secure the pilot shield to the burner bracket and remove the two screws that secure the pilot assembly to the burner bracket. Remove the one screw that secures the burner bracket to the valve plate. See Figure 9.2. Gently push the pilot assembly backwards to allow for the burner to be removed.
3. Remove the screw that secures the burner bracket to the valve plate. See Figure 9.2.
4. Slide burner assembly to the left to disengage the burner tube from the orifice. Remove the burner from the appliance.
5. Remove the nine screws around the perimeter of the valve plate that secure valve plate to the appliance. See Figure 9.3.
6. Lift up on the plate assembly. Ensure the gas ball valve is turned off. Disconnect the ball valve assembly from the gas valve by loosening the compression fitting located on the left side of the gas valve.
7. Prior to removing valve assembly for service, disconnect the pilot wires from the ignition module.
8. Upon completion of service, reverse steps 1-7. If the valve plate gasket is damaged, replace the gasket prior to reinstallation of valve plate assembly.

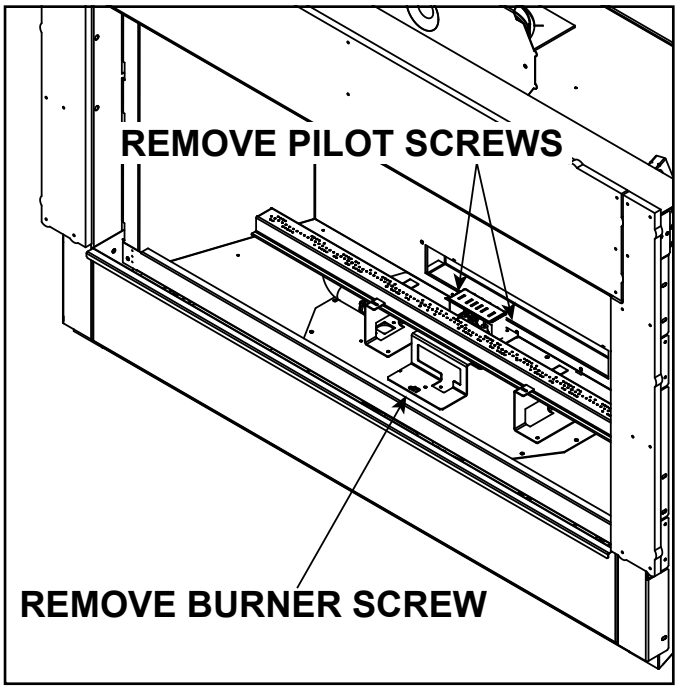

Figure 9.2 Burner Removal

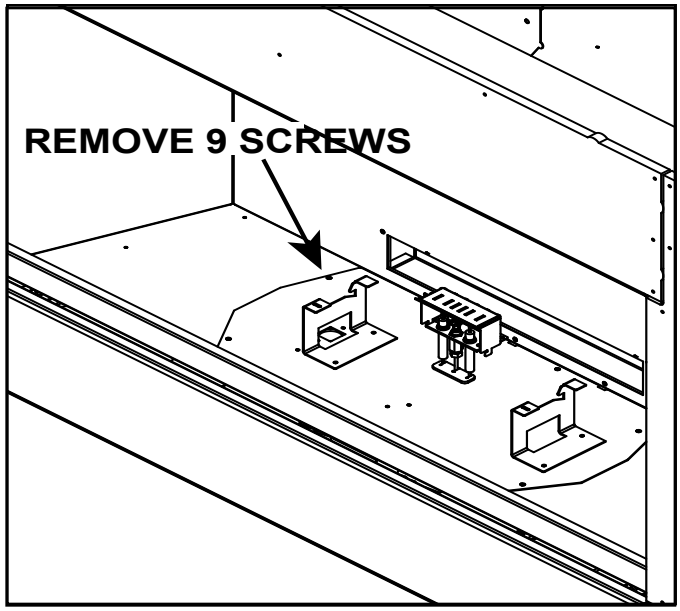

Figure 9.3 Remove Valve Plate

Note: Install the gas supply line in accordance with local codes, if any. If not, follow ANSI Z223.1. Installation should be done by a qualified installer approved and/or licensed as required by the locality. (In the Commonwealth of Massachusetts installation must be performed by a licensed plumber or gas fitter).

Note: A listed (and Commonwealth of Massachusetts approved) 1/2 in. (13 mm) T-handle manual shut-off valve and flexible gas connector are connected to the 1/2 in. (13 mm) control valve inlet.

- **If substituting for these components, please consult local codes for compliance.**

Valve Pressure Taps

The pressure taps are accessible by removing the lower panel prior to finishing material installation. There is limited access to the pressure taps after finishing material installation. Remove glass assembly and utilize an appropriate sized screwdriver.

C. Gas Connection

- Refer to Section 3 for location of gas line access in appliance.
- Gas line may be run through knockout(s) provided.
- The gap between supply piping and gas access hole may be sealed with caulk or aluminum foil tape with a minimum of 300 ºF continuous exposure rating or stuffed with non-combustible, unfaced insulation to prevent cold air infiltration.
- Ensure that gas line does not come in contact with outer wrap of the appliance. Follow local codes.
- Pipe incoming gas line into valve compartment.

Note: It is important to plumb the incoming gas line to the location specified inside the appliance. This specific location allows for future serviceability of the appliance. See Figure 9.4.

- Connect incoming gas line to the 1/2 in. (13 mm) NPT connection on manual shutoff valve.

WARNING! Risk of Fire or Explosion! *Support control when attaching pipe to prevent bending gas line.*

WARNING! Risk of Fire or Explosion! *Gas build-up during line purge could ignite.*

- A small amount of air will be in the gas supply lines.
- *Ensure adequate ventilation.*
- *Ensure there are no ignition sources such as sparks or open flames.*

Light the appliance. It will take a short time for air to purge from lines. When purging is complete the appliance will light and operate normally.

WARNING! Risk of Fire, Explosion or Asphyxiation! *Check all fittings and connections with a non-corrosive commercially available leak-check solution.* ***DO NOT*** *use open flame. Fittings and connections could have loosened during shipping and handling.*

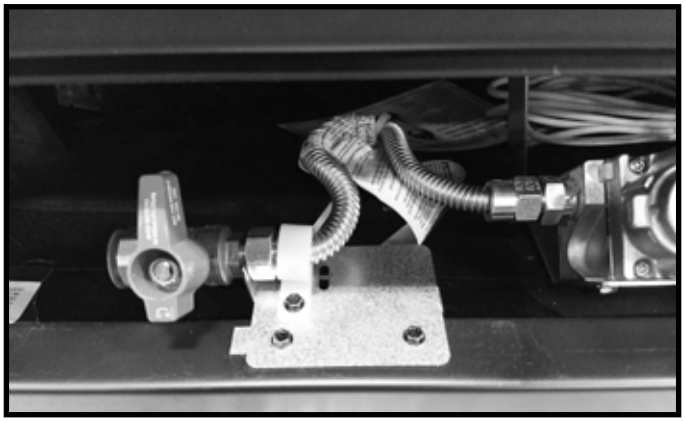

Figure 9.4 Incoming Gas Line Location

D. High Altitude Installations

NOTICE: *If the heating value of the gas has been reduced, these rules do not apply. Check with your local gas utility or authorities having jurisdiction.*

When installing above 2000 feet elevation:

- In the USA: Reduce input rate 4% for each 1000 feet above 2000 feet.
- In CANADA: Input ratings are certified without a reduction of input rate for elevations up to 4500 feet (1370 m)above sea level. Please consult provincial and/or local authorities having jurisdiction for installations at elevations above 4500 feet (1370 m).

Check with your local gas utility to determine proper orifice size.

E. Air Shutter Setting

WARNING! *Risk of Explosion or Delayed Ignition! Improperly adjusted air shutter could cause soot buildup.*

NOTICE: *If sooting occurs, provide more air by opening the air shutter.*

Air shutter settings should be adjusted by a qualified service technician at the time of installation. The air shutter is set at the factory for a typical horizontal termination through a 2 X 6 wall:

JADE32IN-B: 90 degree elbow off top with 9 inches of horizontal vent pipe.
JADE42IN-B /JADE42IL-B: 12 inches of vertical off the top of the appliance, 90 degree elbow, 9 inches of horizontal vent pipe.

Adjust air shutter for different vent runs. See Figure 9.5.

- Loosen the 1/4 inch screw.
- Twist the air shutter to adjust.
- Air shutter may be opened for longer horizontal vent runs.
- Tighten the 1/4 inch screw.

Shutter Setting Verification / Flame Appearance

- After 15 minutes, the flames will be a yellow/blue mix. The front flames may be blue at this time.
- After 30 minutes, the flames should be yellow with some blue flames near the burner ports.
- After 1 hour, the flame will be at its maximum maturity.

NOTICE: *Flames should not appear orange or stretch to the top of the firebox. If flames are dark orange with dark, smoky tips, provide more primary air to the burner by opening the air shutter accordingly.*

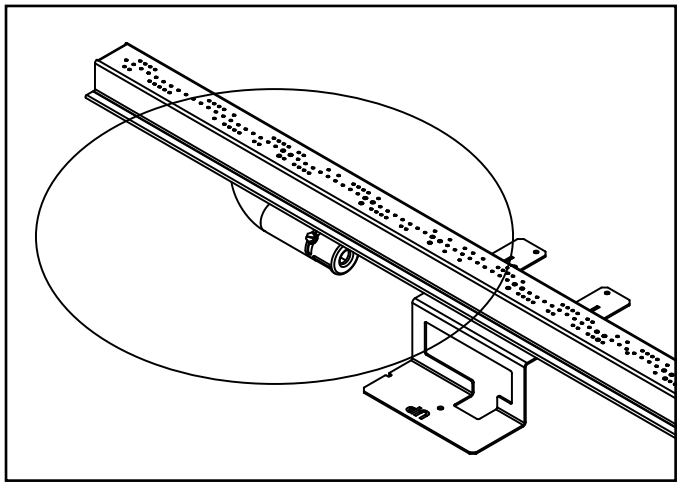

Figure 9.5 Air Shutter Location

Air Shutter Settings

	NG	Propane
JADE32IN-B	1/16 in.	1/8 in.
JADE42IN-B JADE42IL-B	1/16 in.	3/16 in.

10 Finishing

A. Facing Material

⚠ WARNING

Risk of Fire!

DO NOT *apply combustible materials beyond the minimum clearances. Comply with all minimum clearances to combustibles as specified in this manual. Materials overlapping into non-combustible zones could ignite and will interfere with air flow through decorative barrier fronts.*

- Metal front of appliance may be covered with non-combustible materials only, excluding lower cover panel. See Figure 10.2.
- Facing and/or finishing materials must not interfere with air flow through decorative barrier fronts, removal of decorative barrier fronts or access for service.
- Facing and/or finishing materials must never overhang into the glass opening.
- Observe all clearances when applying combustible materials.
- Seal gaps between the finished wall and appliance top and sides using a 300 ºF minimum sealant. Refer to Figure 10.1 and Figure 10.2.

NOTICE: *Surface temperatures around the appliance will become warm while the appliance is in operation. Ensure finishing materials used for all surfaces (floor, walls, mantels, etc.) will withstand temperatures up to 190ºF.*

If using vinyl flooring, refer to Section 3.D.

WARNING! Risk of Fire! *Comply with all minimum clearances to combustibles as specified. Framing closer than the minimums listed must be constructed entirely of noncombustible materials (i.e., steel studs, concrete board, etc.)*

The appliance is designed to accept 1/2 in. wall sheathing materials such as drywall, plywood, wood composites, or non-combustible materials. The type of material used depends whether the installation is an Inside or Overlap Fit Method. Refer to Section 10.D regarding installation details associated with the Inside and Overlap Fit methods.

The factory-supplied non-combustible board must be used in all installations. It must be directly attached to structural framing adjacent to the appliance. Screw fasteners should be installed in the pilot holes provided in the outer perimeter of the non-combustible board. See Figure 10.1 and Figure 10.2.

The factory-supplied board is designed such that its edges will be at the approximate center of the adjacent framing, assuming it is 1-1/2 in. nominal thickness. This will allow the wallboard joints to occur on the center of the framing where the panels can be fastened properly. If the framing thickness is less than 1-1/2 in. nominal, such as with formed steel systems, then it may be necessary to adjust the adjacent framing dimensions so that the non-combustible board and wallboard joints are centered on the framing.

Finishing Instructions

It is important to follow the framing and finishing instructions to ensure proper placement of fireplace into the surrounding framing/finishing materials.

Wall sheathing materials 1/2 in. thick are specified in this installation manual to properly align with the factory-installed non-combustible material.

WARNING! Risk of Fire! DO NOT *remove the factory-installed non-combustible board or cover it with combustible material, such as:*

- *Drywall (gypsum board)*
- *Plywood*
- *Materials that do not meet the ASTM E 136 Non-combustibility standard (below).*

Removal of factory-installed, non-combustible board and/or use of materials not meeting the ASTM E 136 standard may cause fire.

- Facing and/or finishing materials must not interfere with air flow through decorative barrier fronts.
- Facing and/or finishing materials must never overhang into the glass opening.
- Observe all clearances when applying combustible materials.

WARNING! Risk of Fire! DO NOT *apply combustible materials beyond the minimum clearances. Comply with all minimum clearances to combustibles as specified in this manual. Overlapping materials could ignite and will interfere with proper operation of decorative barrier fronts.*

WARNING! Risk of Fire! DO NOT *install drywall or other combustible materials over the factory-installed non-combustible board. Overlapping materials could ignite.*

Decorative facing material thickness is measured from the face of the factory-installed non-combustible board. See Section 10.D for Overlap Fit and Inside Fit requirements.

Non-Combustible Materials Specification

Material which will not ignite and burn. Such materials are those consisting entirely of steel, iron, brick, tile, concrete, slate, glass or plasters, or any combination thereof.

Materials that are reported as passing **ASTM E 136, Standard Test Method for Behavior of Materials in a Vertical Tube Furnace at 750 ºC.**

B. Non-Combustible Board and Drywall Installation

Introduction

If the desired finished fireplace installation does not utilize non-combustible finishing materials (such as tile, marble, stone, etc.), special attention must be paid to the installation of drywall/gypsum wallboard to the side joints of the non-combustible board to minimize potential development of cracking and paint discoloration. Hearth and Home Technologies has tested the following methods and materials and therefore recommends the following steps for the best drywall performance.

Attaching Non-Combustible Board to Framing

1. To ensure the lower cover panel has been correctly installed, verify that two screws (total) have been installed in the lower left and right sides of the fireplace opening. See Figure 8.1. These screws, when installed, will ensure the lower panel is correctly installed. If the lower cover panel is not correctly installed, the decorative barrier front may not fit into the fireplace opening correctly. Refer to section 6.D for more information regarding the included non-combustible board.
2. The appliance ships with the required non-combustible board. The large top piece of non-combustible board is pre-installed at the factory. The narrow left and right non-combustible pieces are shipped within the appliance. Install the non-combustible side pieces with the screws provided in the manual bag assembly. There are pilot holes located on the left and right side columns. Care should be taken not to tighten these screws into the non-combustible board excessively. Set screws flush to the face of the non-combustible board. See Figure 10.2 and Section 6.D.
3. The outer perimeter of the factory-installed non-combustible board has pre-drilled pilot holes. See Figure 10.1. Secure the non-combustible board to adjacent framing with drywall screws that are a minimum of 1-1/4 inch in length. Care should be taken not to tighten these screws into the non-combustible board excessively. Set screws flush to the face of the non-combustible board. See Figure 10.2 and Section 6.D.
4. When installing drywall around the appliance, install a rectangular hole for the fireplace/non-combustible board in a single sheet of drywall. This will minimize the joints that require finishing adjacent to the fireplace opening. Ensure that the 1/8 inch gap is maintained between the factory installed non-combustible board and the surrounding drywall. See Figure 10.1. Secure the drywall to the framing with screws a minimum of one inch in length every six inches across the top of the fireplace and every ten inches on the sides of the fireplace.

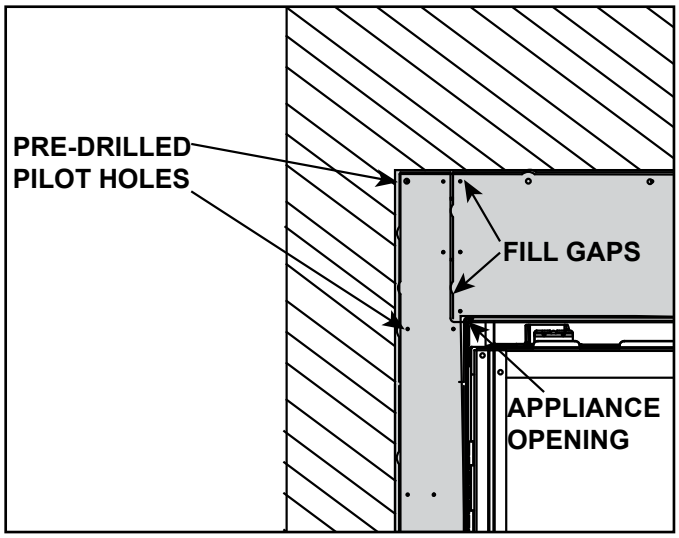

Figure 10.1 Install Non-Combustible Board

5. To ensure good adhesion of drywall compounds and tape, thoroughly clean the non-combustible board and surrounding drywall to remove dust. The non-combustible board may be primed with a high-quality PVA primer.

Filling and Finishing Seams

1. **Step 1:** Fill all gaps and joints between the non-combustible board pieces and the drywall with a general purpose chemically setting joint compound such as Durabond® 45 Joint Compound manufactured by USG (Sheetrock® brand), recommended by Hearth & Home Technologies. Use a drywall knife to firmly press the joint compound into all gaps. See Figure 10.1. Allow these joints to dry.
2. **Step 2:** All joints are to be taped with fiberglass mesh tape 1 7/8" minimum width, and embedded with Setting-Type joint compound, such as with Durabond® Joint Compound manufactured by USG (Sheetrock® brand), or equivalent. Allow these joints to dry.
3. **Step 3:** Depending on the technique used in steps 1 and 2, two to three finishing coats are required to provide a smooth and durable finish. Hearth and Home Technologies recommends a lightweight or all-purpose compound. Allow each coat to properly cure. Allow the finishing coat(s) to cure for 24 hours before operating appliance.

NOTICE: *Hearth & Home Technologies recommends using multiple pieces of decorative finish material around the opening of the appliance to reduce the chances of the material cracking. A single piece of decorative finish material (such as marble or granite) is more susceptible to cracking due to uneven heating and cooling which causes temperature differentials within the material itself. The use of multiple pieces will reduce the temperature differentials in each piece and reduce the likelihood of cracks. In addition to using multiple pieces of decorative finish material, the installation of the Passive Heat optional heat management system will also reduce the chances of cracking.*

Painting

If desired finishing includes a painted wall, a high-quality 100% acrylic latex paint with a high-quality latex primer base coat are recommended around the appliance to limit discoloration. Oil-based or standard acrylic paints may be more prone to discoloration due to heat exposure.

Drywall Joint-Crack Prevention and Repair

Drywall joints around the fireplace will be affected by exposure to elevated temperatures, along with other environmental, structural factors due to new construction, and methods used to install and finish the drywall. If a crack does emerge adjacent to the fireplace, it can be permanently repaired by filling it with a paintable latex caulk, followed by repainting.

Some movement of the screws used to secure the non-combustible board to the appliance/surround framing is expected. If a blemish begins to show over a screw head, sand the surface to remove the blemish and repaint.

WARNING! Risk of Fire! *Maintain specified air space clearances to combustibles. Inadequate air space could cause overheating and fire.*

WARNING! Risk of Fire! **Maintain specified air space clearances to combustibles.** *Failure to comply with these instructions may cause a fire or cause the appliance to overheat.*

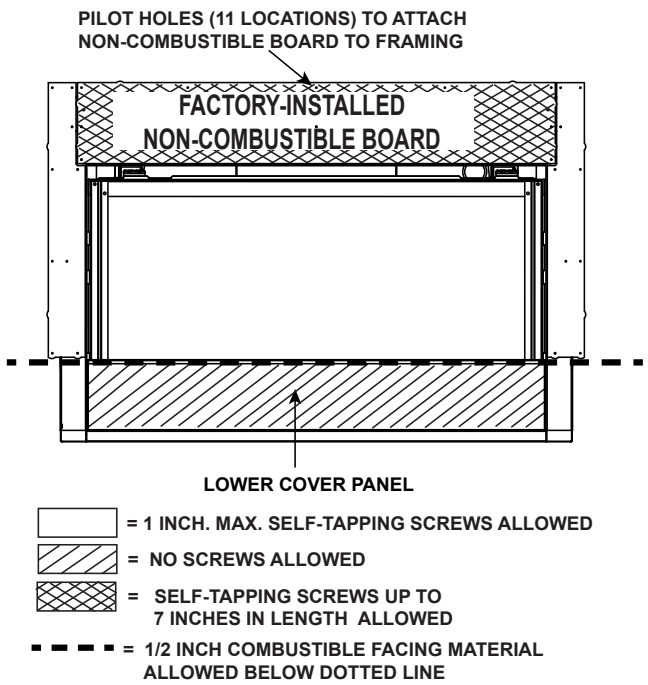

Note: It is acceptable to use a silicone sealant with a minimum of 300 ºF continuous exposure rating to adhere drywall to lower cover panel.

➔ **Figure 10.2 Finishing Details**

CAUTION! Risk of Glass Damage and Cuts! *DO NOT drill or install any type of screw or fastener into the lower cover panel. Sharp screw or fastener tips may penetrate and break the glass or cause cuts.*

The final fireplace installation can be accomplished by either the Overlap Fit or Inside Fit method. Reference Section 10.D regarding installation details associated with the Inside Fit and Overlap Fit methods.

It is acceptable to pre-drill holes and use self-tapping screws in the installed non-combustible board to attach non-combustible backer board for tile, marble, etc. Refer to Figure 10.2 for acceptable screw or metal lath location and screw length requirements.

Do not drill or install screws which may penetrate the lower cover panel as this will restrict required access to the glass, battery-backup, and control module. See Figure 10.2.

Note: If the desired look is painted drywall, it is recommended that no additional screws are installed into the factory-provided non-combustible board. Only install the screws provided into the pilot holes located in the factory-provided non-combustible board.

NOTICE: *The location of the Passive Heat discharge opening could allow for venting and other construction materials to be visible. It is acceptable to paint the vent pipe and other construction materials using a high temperature paint with a minimum of 300 °F continuous exposure rating. Hearth & Home Technologies recommends using black touch up paint (part number TUP-GBK-12) available from your Hearth & Home Technologies dealer.*

C. Mantel and Wall Projections

WARNING! Risk of Fire! *Comply with all minimum clearances as specified. Framing closer than the minimums listed must be constructed entirely of non-combustible materials (i.e., steel studs, concrete board, etc.).*

> **Note:** Measurement is taken from top/side of the opening, NOT the top/side of the fireplace.

Combustible Mantels

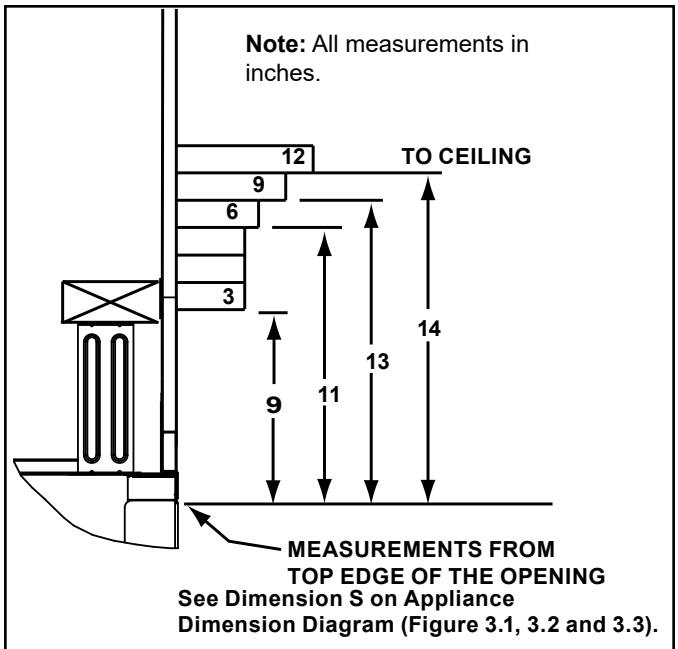

Figure 10.3 Minimum Vertical and Maximum Horizontal Dimensions of Combustibles

Combustible Mantels - Passive Heat Kit Installed

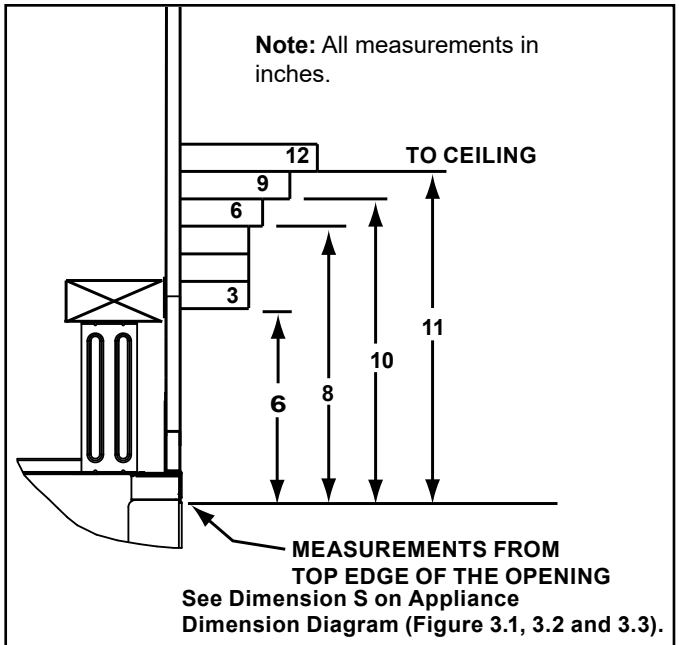

Figure 10.4 Minimum Vertical and Maximum Horizontal Dimensions of Combustibles

Non-Combustible Mantels

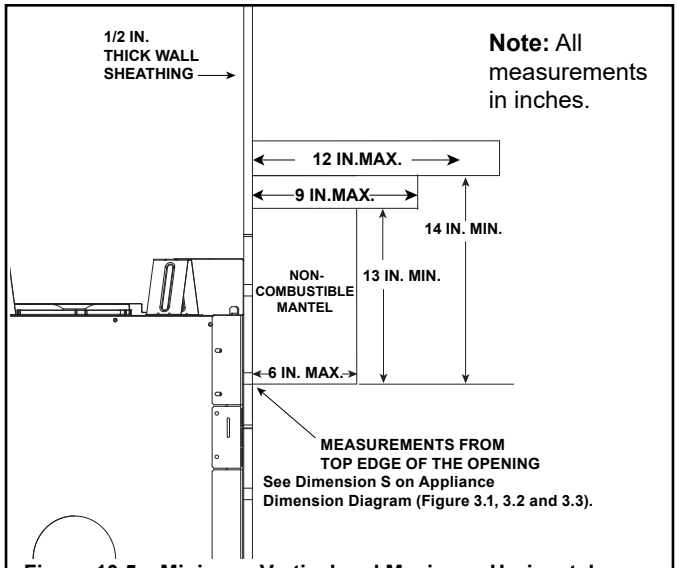

Figure 10.5 Minimum Vertical and Maximum Horizontal Dimensions of Non-Combustibles

Combustible and Non-Combustible Mantel Legs or Wall Projections

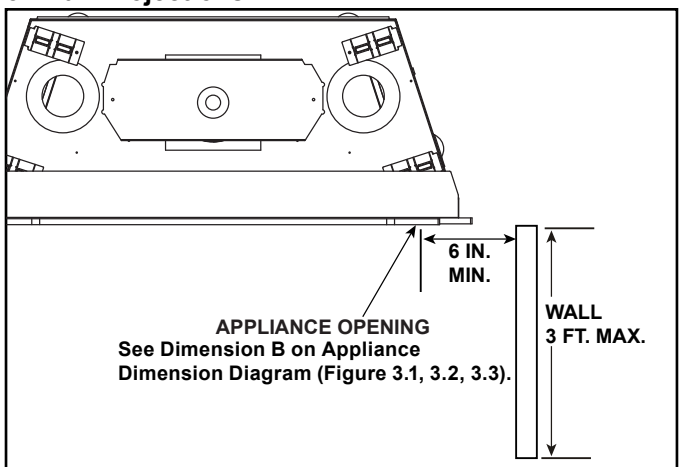

Figure 10.6 Combustible and Non-Combustible Mantel Leg or Wall Projections (Acceptable on both sides of opening)

Combustible and Non-Combustible Mantel Legs or Wall Projections

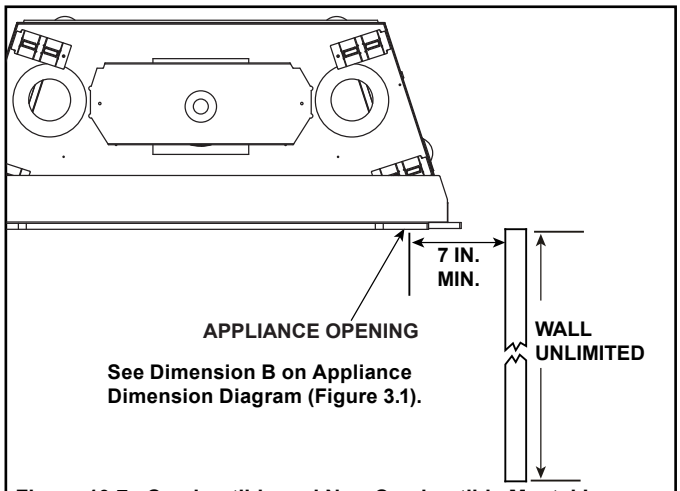

Figure 10.7 Combustible and Non-Combustible Mantel Leg or Wall Projections (Acceptable on both sides of opening)

Finishing Material Installed with Passive Heat Optional Heat Management System

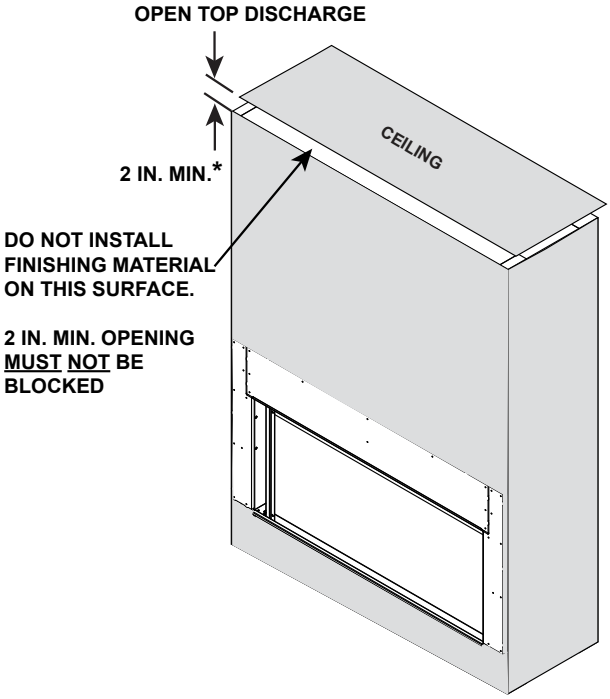

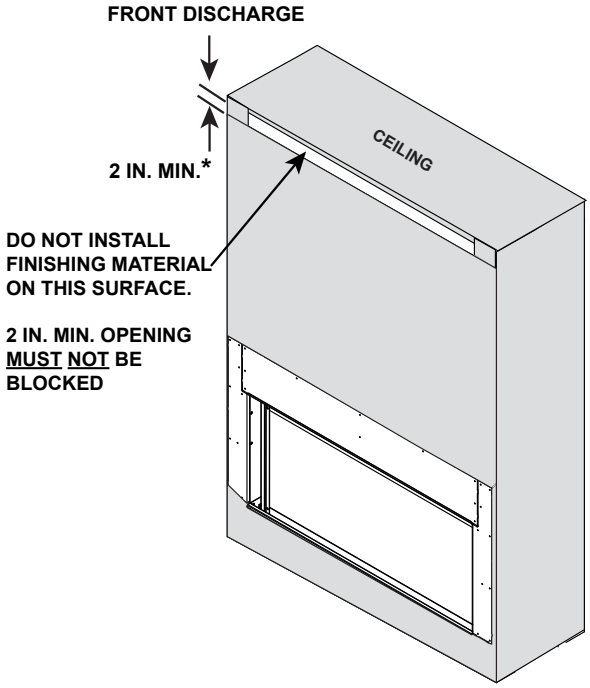

* = Mesh screen required for front discharge or open top discharge passive heat installations with discharge opening of 3 inches or greater.

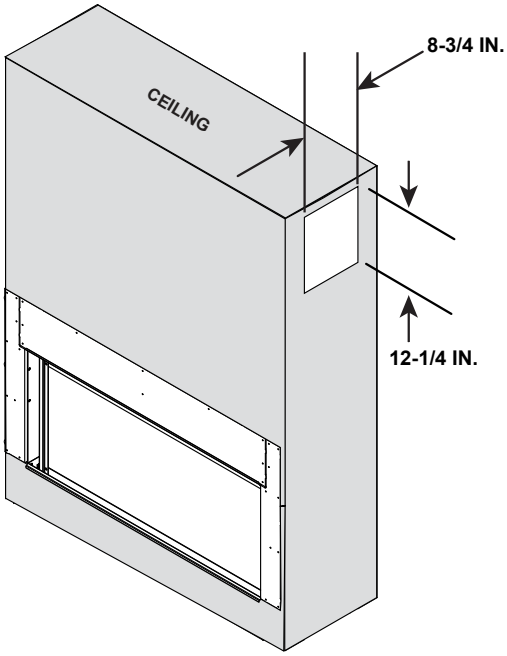

Figure 10.8 Finishing Material installed with Passive Heat Optional Heat Management System

D. Decorative Barrier Front Dimensions for Finishing

WARNING! Risk of Fire! *A decorative barrier front is required for this model. DO NOT operate this appliance without a decorative barrier front in place.*

Only decorative barrier fronts certified for use with this appliance model may be used. Contact your dealer for a list of decorative barrier fronts that may be used.

Only decorative barrier fronts certified for use with this appliance model may be used. Contact your dealer for a list of decorative barrier fronts that may be used. Once you have determined what kind of decorative barrier front and finishing material is going to be used on the fireplace, you may use the table below which shows the decorative barrier front models and the finishing material thickness allowed. For an inside fit there is an available template to assist with sizing the finishing material.

Overlap Fit - CFTF and PFF Decorative Barrier Fronts

(0 Inches to 1 Inch Thick Finishing Material)

Both the CFTF and PFF decorative barrier fronts are designed to overlap finish materials 0 inches to 1 inch thick. See Figure 10.9 and Figure 10.10.

NOTICE: *This one inch maximum not only includes the decorative finish materials (marble, tile, slate, etc) but also the mortar or adhesive used to attach the decorative finish material*.

The non-combustible finish material can be installed up to the fireplace opening.

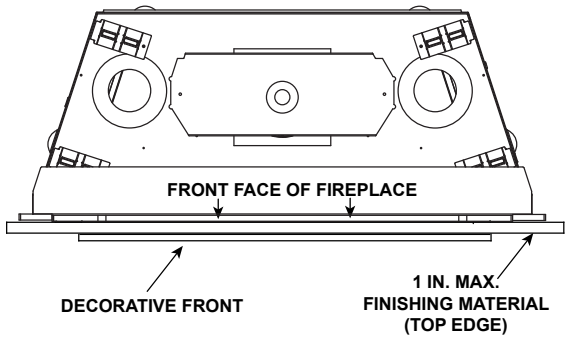

Finishing materials 1 inch maximum thick.
Stop finishing material flush with opening.

Figure 10.9 Overlap Fit Decorative Barrier Front (CFTF and PFF Decorative Barrier Fronts)

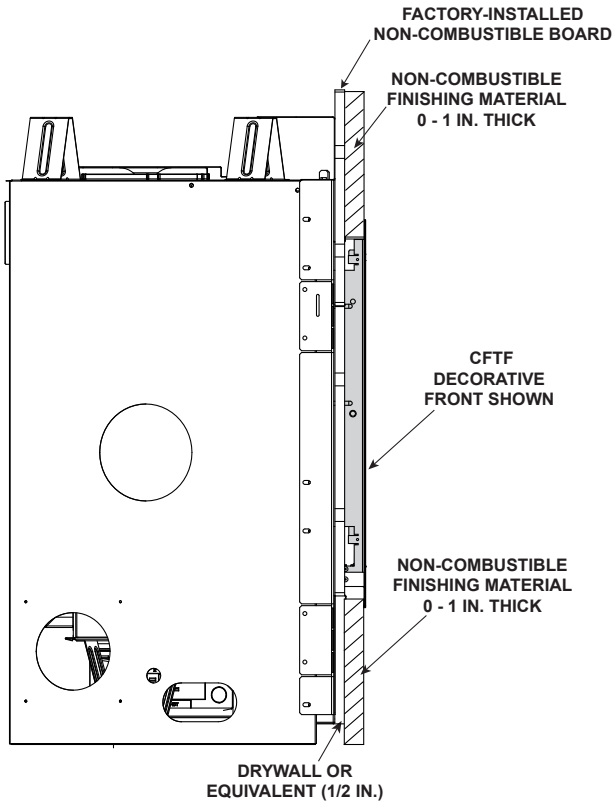

Figure 10.10 Overlap Fit Method (CFTF and PFF Decorative Barrier Fronts)

Inside Fit - CFTF Front

(1 Inch to 6 Inch Thick Finishing Material)

The CFTF is the only approved front for inside fit applications (finish material over 1 inch thick). The CFTF decorative barrier front can be installed with or without the outer decorative barrier front trim (included with the decorative barrier front). See Figure 10.10.

If the desired look is to include the outer decorative barrier front trim, finishing materials up to 1-3/16 around the fireplace opening. See Fig 10.11. For this installation, the inner decorative barrier front hangs on four tabs located on outer decorative barrier front trim. The auxiliary hanging brackets included with the appliance can be removed and discarded. Retain the fasteners for use when installing the outer decorative barrier front trim. See Figure 10.13.

If the desired look is to exclude the outer decorative barrier front trim, finishing material can be installed up to the fireplace opening. See Fig 10.13. For this installation, the inner decorative barrier front hangs on four tabs located on the auxiliary hanging brackets. The outer decorative front trim is not used and may be discarded. See Figure 10.14.

Note: The auxiliary hanging brackets will need to be removed temporarily prior to the installation of the CFTF front to remove the top and bottom finishing tabs from them. Ensure the auxiliary hanging brackets are pushed toward the appliance prior to tightening them to the appliance.

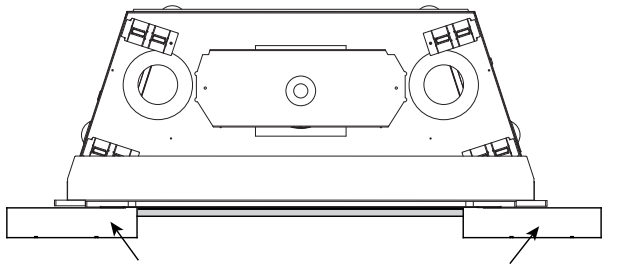

Figure 10.11 Maximum Finish Material Thickness - CFTF Decorative Barrier Front

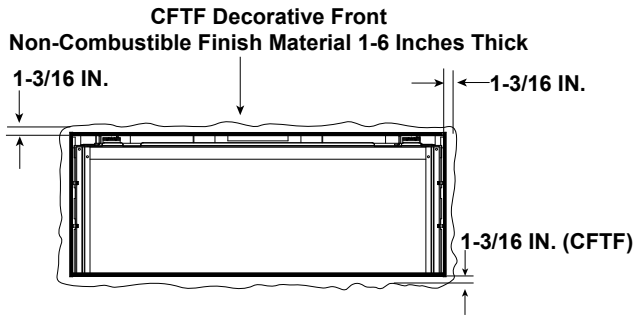

Figure 10.12 Clearances to Appliance Opening With Outer Decorative Barrier Front Trim

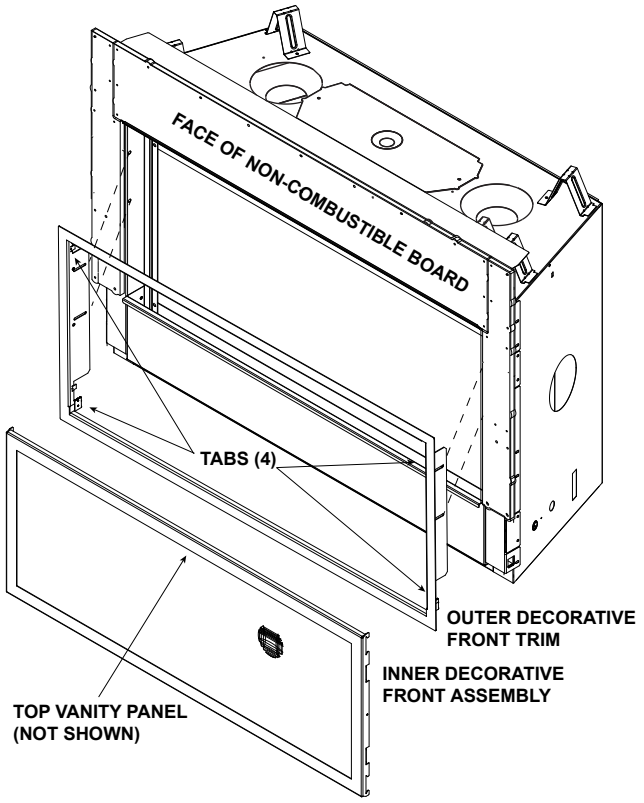

Figure 10.13 CFTF Front Installation With Outer Decorative Barrier Front Trim

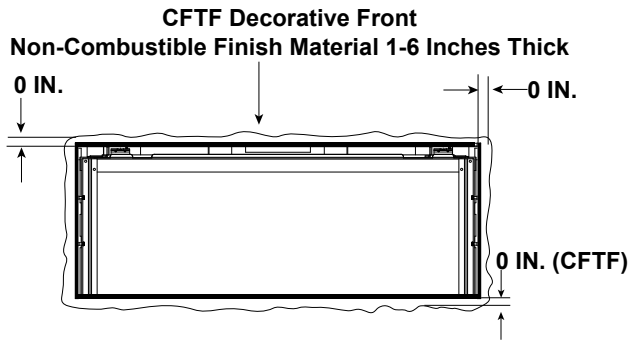

Figure 10.14 Clearances to Appliance Opening Without Outer Decorative Front Trim

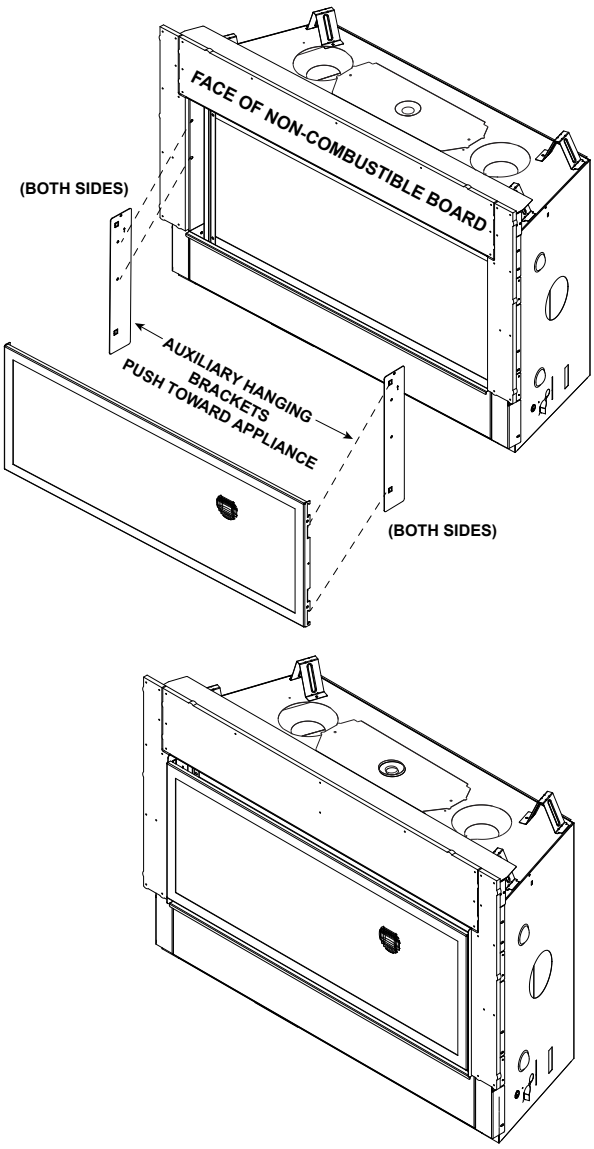

Figure 10.15 CFTF Front Without Outer Decorative Front Trim

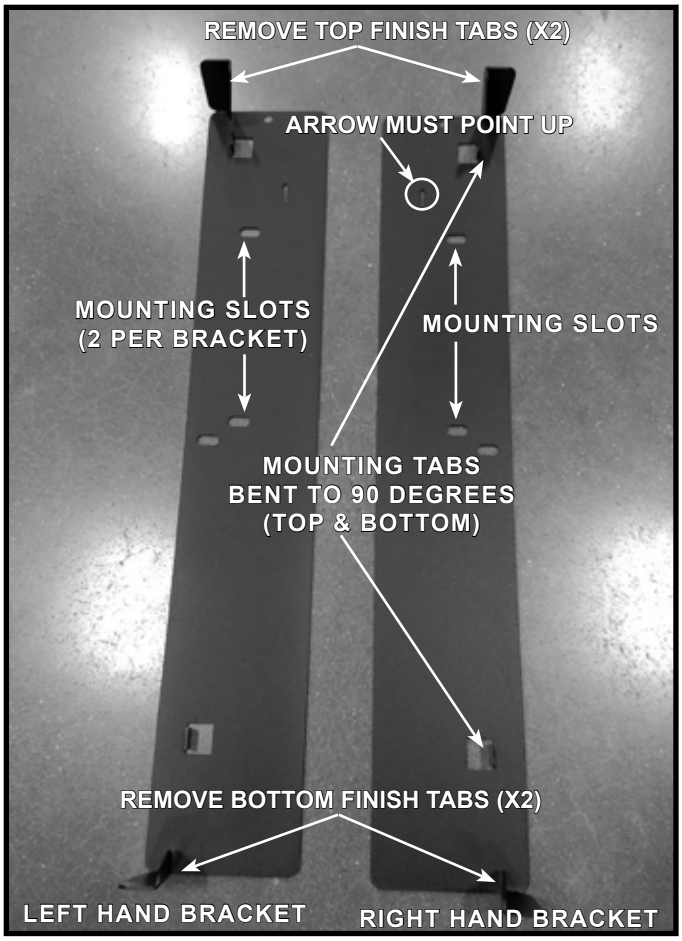

Figure 10.16 Bend Tabs on Auxiliary Hanging Brackets

Finish tabs are removed from auxiliary hanging bracket by repeatedly bending back and forth with a pliers until they break away from the bracket.

Reinstall auxiliary hanging brackets.

Good Faith Guidelines for TV Installations Above a Fireplace with Passive Heat Option

This diagram specific to these models: JADE32IN-B
JADE42IN-B
JADE42IL-B

WARNING! Risk of Fire! *Wire mesh required on bottom of discharge opening when discharge opening is greater than 3 inches. Secure mesh to top of framing.*

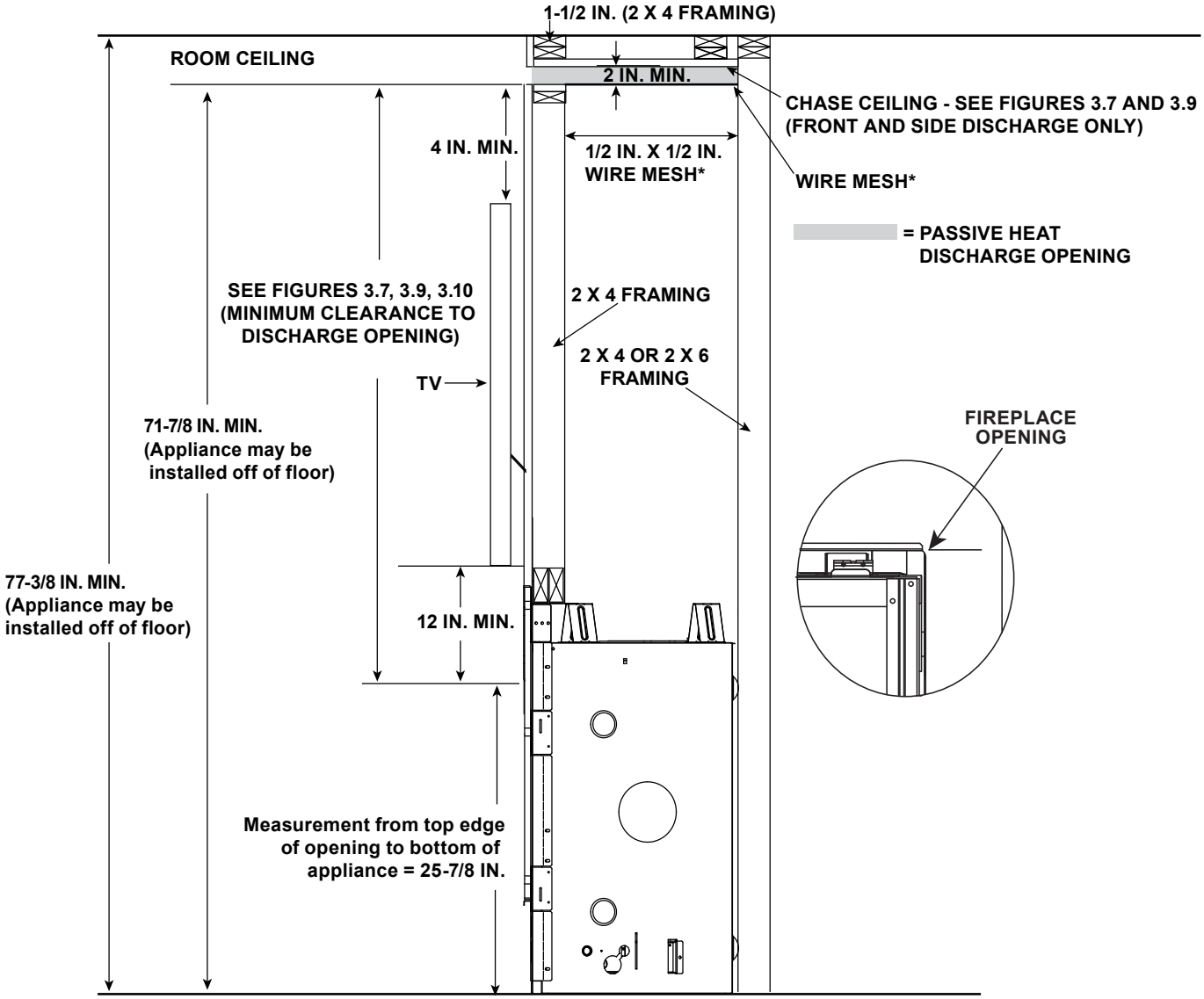

* Wire mesh required for front discharge or open top discharge passive heat installations with discharge opening of three inches or greater.

NOTE: The TV installation requirements are the same regardless of whether the Passive Heat kit is installed with a top discharge, side discharge or open top discharge.

Figure 10.17 Good Faith Guidelines for TV Installations Above a Fireplace with Passive Heat Option

11 Appliance Setup

A. Remove the Shipping Materials

Remove shipping materials from inside or underneath the firebox.

- The splatter guard is a piece of corrugated material used to protect the appliance during the installation process before finishing work on the whole hearth is complete. Splatter guards may be factory installed or accompany the decorative barrier front of the appliance, depending on the fireplace model. Splatter guards must be removed before appliance is fired.
- The left and right side non-combustible boards are packaged within the splatter guard. Remove them by carefully disengaging the tabs from the slots on the lower portion of the splatter guard. Install as instructed in Section 6.

WARNING! Risk of Fire! *Close the ball valve before installing the splatter guard to prevent accidental lighting. Remove the splatter guard before lighting the appliance.*

B. Clean the Appliance

Clean/vacuum any sawdust that may have accumulated inside the firebox or underneath in the control cavity.

C. Install the Glass Refractory (Optional)

An optional glass refractory kit is available for use with the JADE32IN-B, JADE42IL-B and JADE42IN-B models. Install the glass refractory per instructions included with the kit.

D. Install LED Lights (Optional)

An optional LED light kit is available for use with the JADE42IN-B, JADE42IL-B and JADE32IN-B models. Install the LED lights per the instructions included in the kit.

E. Install Stones (Optional)

An optional stones kit is available for use with the JADE42IN-B, JADE42IL-B and JADE32IN-B models. Install the stones per instructions included with the kit.

F. Install Log Sets (Optional)

Optional log sets are available for use with the JADE42IN-B, JADE42IL-B and JADE32IN-B models. Install the log set per instructions included with the kit.

G. Install Media

Decorative glass media is included with the JADE42IN-B, JADE42IL-B and JADE32IN-B models.

⚠ WARNING

Delayed Ignition Risk

- Place media according to instructions.
- Do NOT place media in area in front of pilot
- Do NOT place media in a position that they may fall into area in front of pilot.
- Do NOT use any media other than the Hearth & Home Technologies-supplied options for this fireplace model.

Fireplace will not function properly.
Delayed ignition may occur.

⚠ WARNING

Risk of Asphyxiation or Fumes.

- Place media according to instructions.
- Do NOT place media in area between glass and firebox.
- Do NOT place media in a position that they may fall into area between glass and firebox.
- Do NOT use any media other than the media supplied with this fireplace.

Fireplace will not function properly.
Gas leak may occur.

Placing the Media

Install glass media around the burner ensuring that no media is placed on the burner or in the gap located behind the burner. See Figure 11.1. Install media on top of pilot shield.

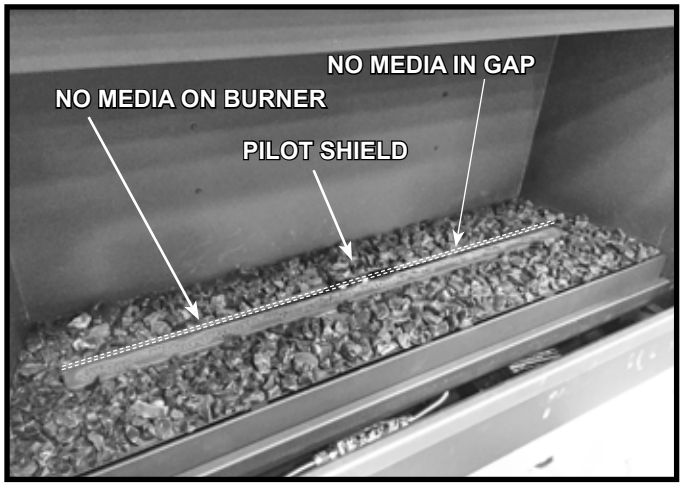

Figure 11.1 Media Placement

H. IntelliFire Touch® Control System Setup

- Detailed instructions for electrical wiring and connections are provided in Section 8.
- Determine if this appliance is equipped with a Module Reset Switch. See Section 8. Verify this switch is in the ON position.
- Verify that the 3-Position switch on the IFT-ECM is switched to the REMOTE position. Detailed Operating Instructions for the IFT-ECM are provided in Section 3.K of the Owner's Manual.

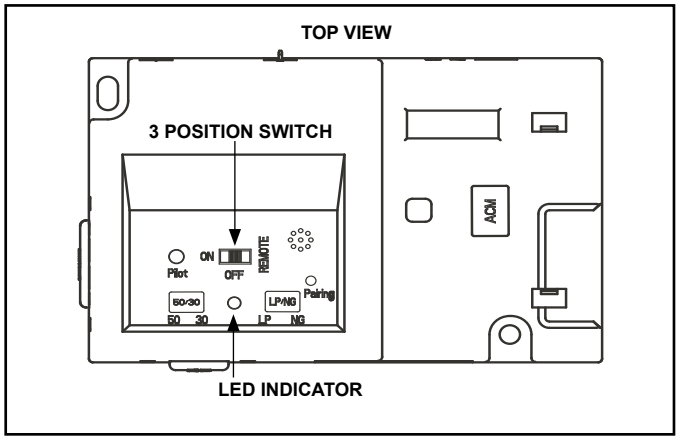

Figure 11.2 IFT-ECM

If this appliance is being upgraded to an optional IntelliFire Touch Remote Control, and/or optional power vent, fan, or light kit are added as new accessory upgrade(s) to fireplace:

1. The RC400 remote will need to be paired to the ECM.
2. Follow the installation instructions provided with the IntelliFire Touch remote and/or accessory kit(s).

I. Fixed Glass Assembly Removal and Replacement

WARNING! Risk of Asphyxiation! *Handle fixed glass assembly with care. Inspect the gasket to ensure it is undamaged and inspect the glass for cracks, chips or scratches.*

- ***DO NOT*** *strike, slam or scratch glass.*
- ***DO NOT*** *operate fireplace with glass removed, cracked, broken or scratched.*
- *Replace as a complete assembly.*

Removing Fixed Glass Assembly

1. Remove the decorative front.
2. The glass assembly has two upper spring latches and two lower spring latches. See Figure 11.1. Locate the two spring latches that are on the upper left and right of the fireplace.
3. Pull upper spring latch on one side forward to release glass assembly while supporting glass assembly with opposite hand. Repeat for the other upper spring latch always taking care to support the glass assembly with one hand.
4. Grasp glass on the upper right and left sides and remove glass assembly by lifting "up" and "out".

Note: Observe the presence of a space or gap between the glass latch and the front of the appliance where the bottom of the glass assembly is positioned. This gap is designed for positive placement when replacing the glass assembly. See Figure 11.3.

Replacing Fixed Glass Assembly

The bottom glass latches have been designed to create a small gap between the glass clip and the face of the appliance. See Figure 11.3.

1. Install the bottom of the glass assembly so that the two tabs on the bottom of the glass latch engage the gap. By tilting the top of the glass towards the face of the appliance, tension will be applied to the bottom two glass latches. Use one hand to support the glass at all times.
2. Fasten the two upper glass latches, one at a time, by pulling out and downward into position on the glass assembly. Use one hand to support the glass at all times.
3. Verify that the top two glass latches are engaged by visually verifying that glass latches have engaged both left and right tabs on the glass frame.
4. Verify the bottom two glass latches have engaged the glass frame tabs by grasping the bottom of the glass frame assembly and pulling the glass frame assembly "away" from the face of the appliance and "release" the glass frame. The spring action of the clips will "pull" the glass frame assembly towards the face of the appliance if bottom clips are properly engaged. If the glass frame assembly does not pull back towards the face of the appliance, repeat steps 1-4.

WARNING! Risk of Explosion! Risk of Asphyxiation! *Glass latches MUST be properly engaged. Inspect glass seal before installing decorative front. Gas could leak!*

5. Reinstall decorative barrier front.

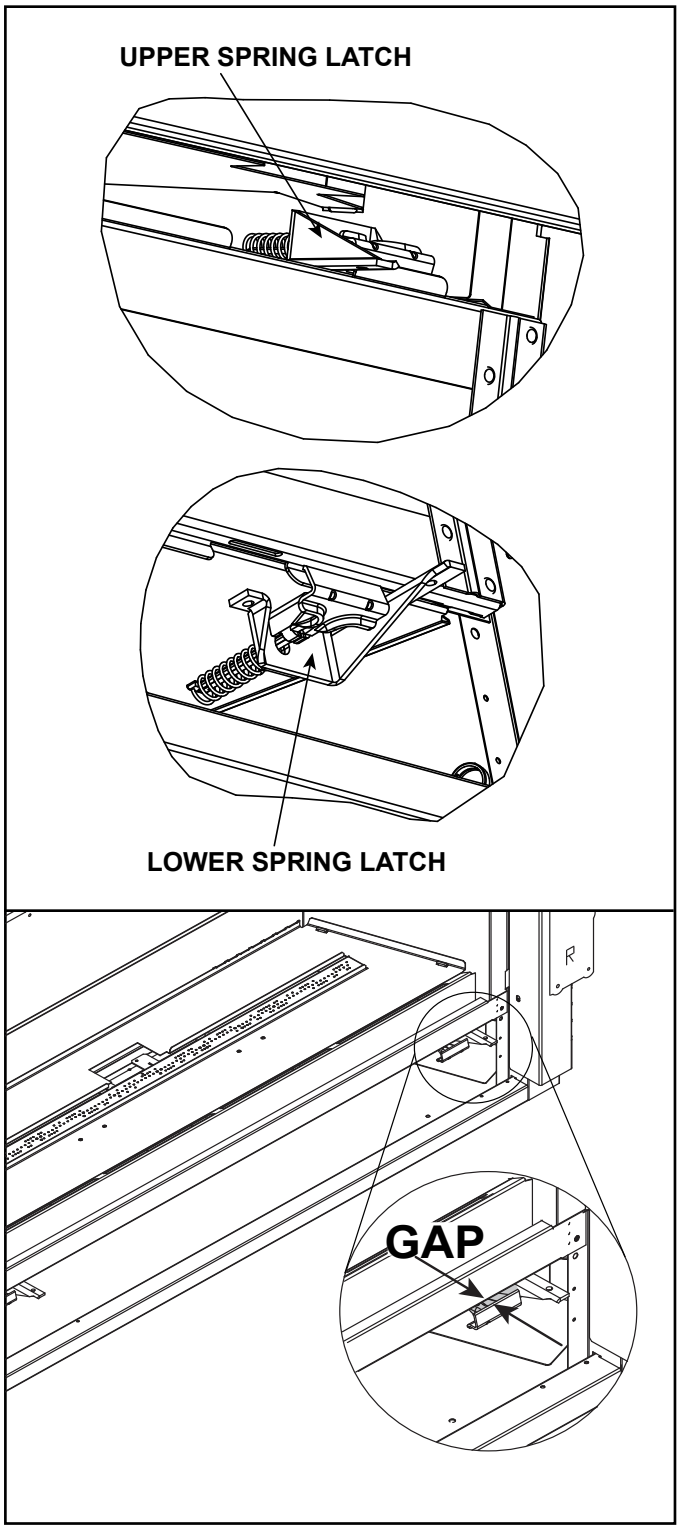

Figure 11.3 Fixed Glass Assembly

J. Install Decorative Barrier Front

WARNING! Risk of Fire! *Install ONLY decorative barrier fronts approved by Hearth & Home Technologies. Unapproved decorative barrier fronts could cause fireplace to overheat.*

IMPORTANT! This fireplace requires an installed decorative barrier front to prevent direct contact with the hot viewing glass. DO NOT operate the fireplace with the barrier removed.

Contact your dealer or Hearth & Home Technologies if the barrier is not present or help is needed to properly install one.

For more information refer to the instructions supplied with your decorative barrier front.

12 Reference Materials

A. Vent Components Diagrams

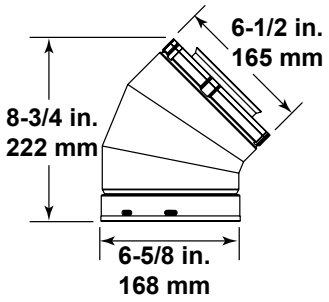

SLP45
45° Elbow

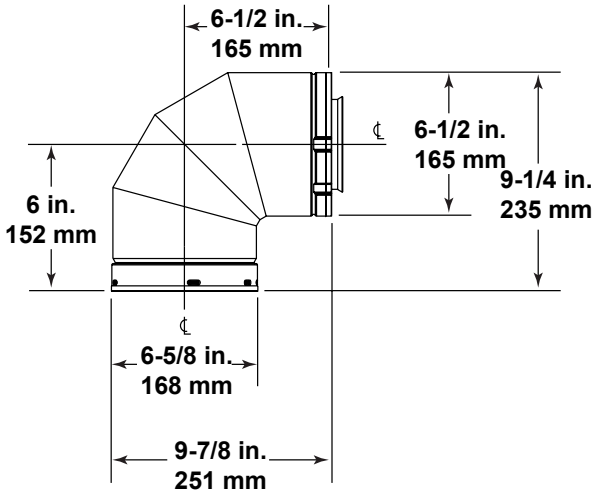

SLP90
90° Elbow

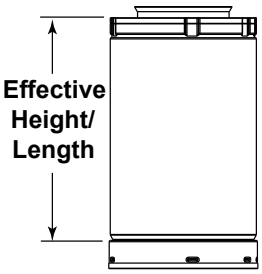

SLP PIPE

Effective Height/Length

Pipe	*inches*	*mm*
SLP4	4	102
SLP6	6	152
SLP12	12	305
SLP24	24	610
SLP36	36	914
SLP48	48	1219
SLP6A	2 - 6	51 - 152
SLP12A	2 - 12	51 - 305
SLP-FLEX-3	36	914
SLP-FLEX-5	60	1524
SLP-FLEX-10	120	3048

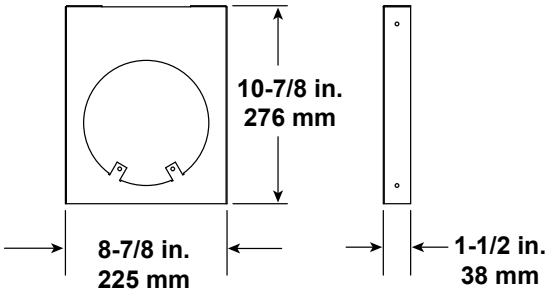

SLP-HVS
Horizontal Pipe
Support

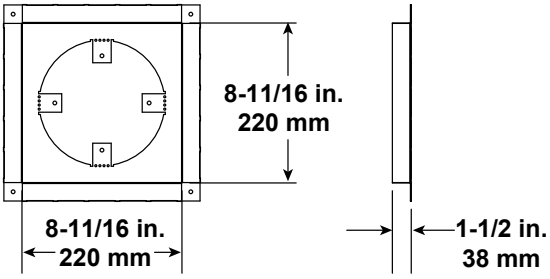

SLP-FS
Ceiling Firestop

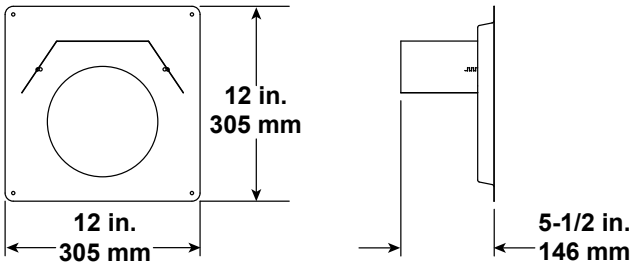

SLP-WS
Wall Shield Firestop

Figure 12.1 SLP Series Vent Components

A. Vent Components Diagrams *(continued)*

Note: Heat shields MUST overlap by a minimum of 1-1/2 in. (38 mm). The heat shield is designed to be used on a wall 4 in. to 7-1/4 in. (102 mm to 184 mm) thick. If wall thickness is less than 4 in. (102 mm) the existing heat shields must be field trimmed. If wall thickness is greater than 7-1/4 in. (184 mm) a DVP-HSM-B will be required.

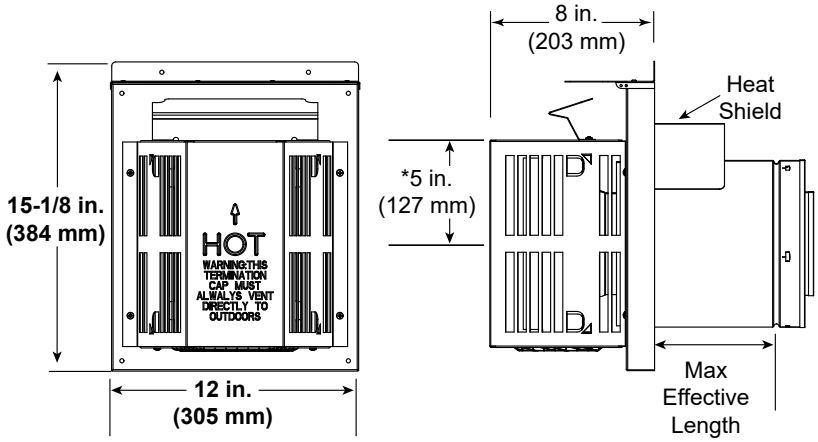

SLP-TRAP
Horizontal Termination Cap

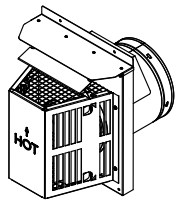

* Center of the horizontal vent pipe to the vertical measuring surface.

Term Cap	Minimum Effective Length	Maximum Effective Length
Trap1	3-1/8 in.	4-3/4 in.
	79 mm	121 mm
Trap2	5-1/4 in.	9-1/4 in.
	133 mm	235 mm

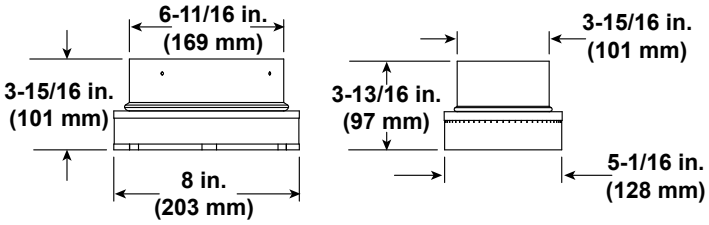

SL-2DVP
Adapter

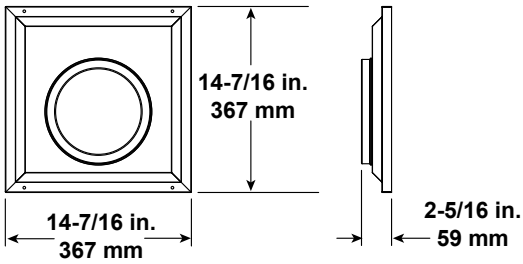

SLP-WT-BK
Wall Thimble-Black

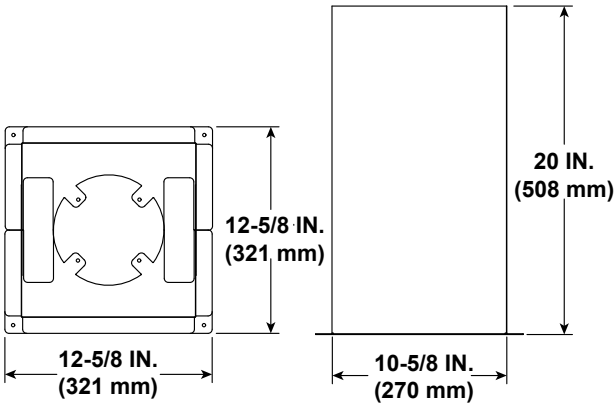

SLP-RDS
ROOF DECK INSULATION SHIELD

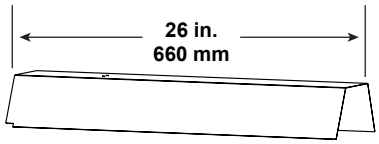

DVP-HSM-B
Extended Heat Shield

Figure 12.2 SLP Series Vent Components

A. Vent Components Diagrams *(continued)*

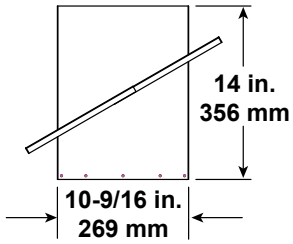

SLP-CCS-BK
Cathedral Ceiling
Support Box-Black

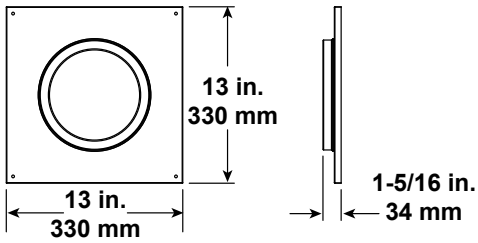

SLP-DCF-BK
Ceiling Firestop
Black

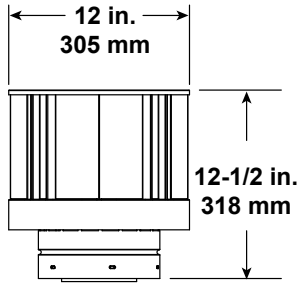

SLP-TVHW
Vertical
Termination Cap

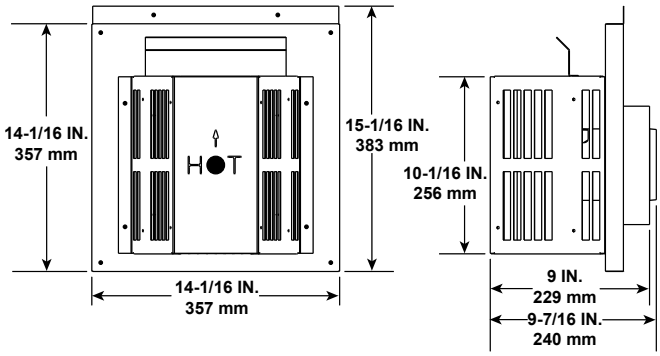

SLP-FLEX-TRAP
Horizontal
Termination Kit

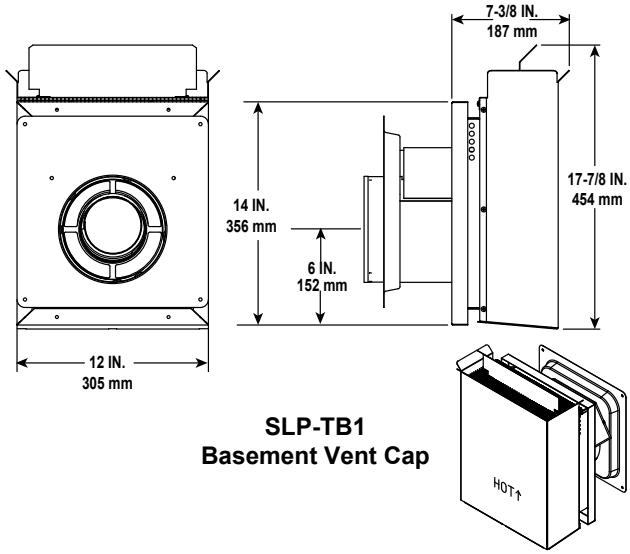

SLP-TB1
Basement Vent Cap

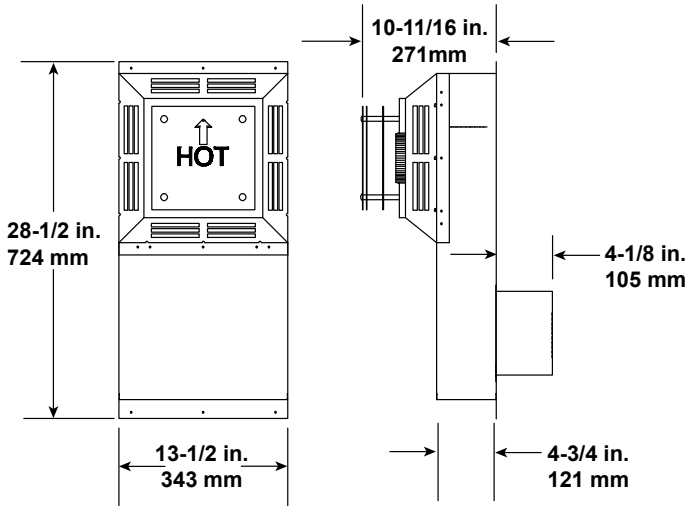

SLK-SNKD
Snorkel
Termination Cap

Figure 12.3 SLP Series Vent Components

A. Vent Components Diagrams *(continued)*

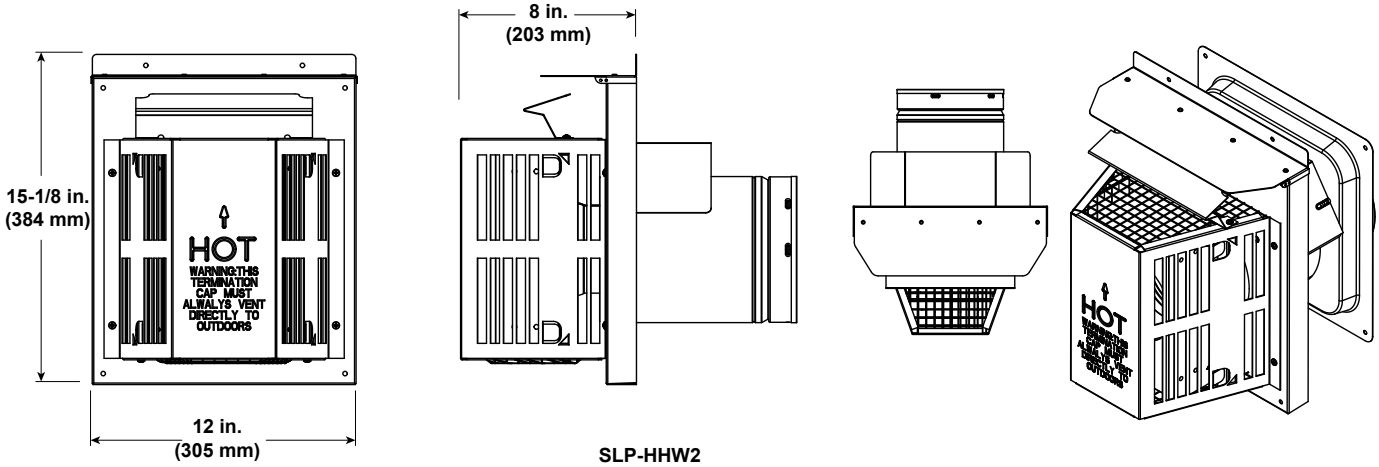

Figure 12.4 SLP series Vent Components

COAXIAL to COLINEAR VENTING

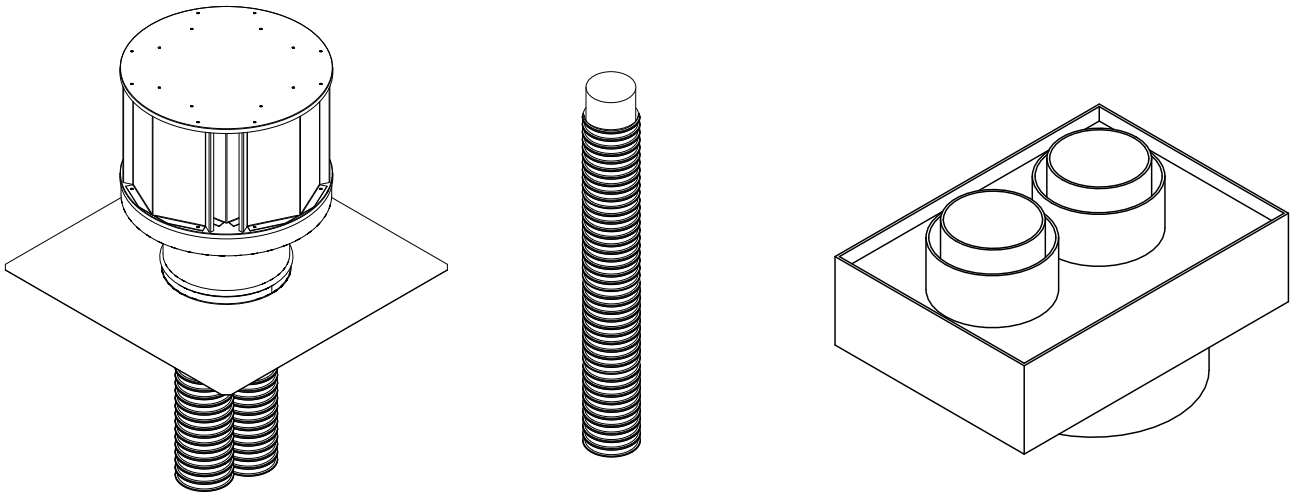

LINK-DV30B
Flex Liner Kit

768-380A
Stainless Steel Flex Pipe

DV-46DVA-GCL
Coaxial/Colinear Appliance Connector

Figure 12.5 Coaxial to Colinear Vent Components

DECORATIVE TERMINATIONS/SHROUDS

Only use listed decorative termination caps/shrouds with Hearth & Home Technologies approved venting systems.

This applies to both DVP and SLP venting systems.

Decorative Terminations Caps/Shrouds

DTO134
DTO146
DTS134
DTS146
LDS33
LDS46
LDS-BV

A. Vent Components Diagrams *(continued)*

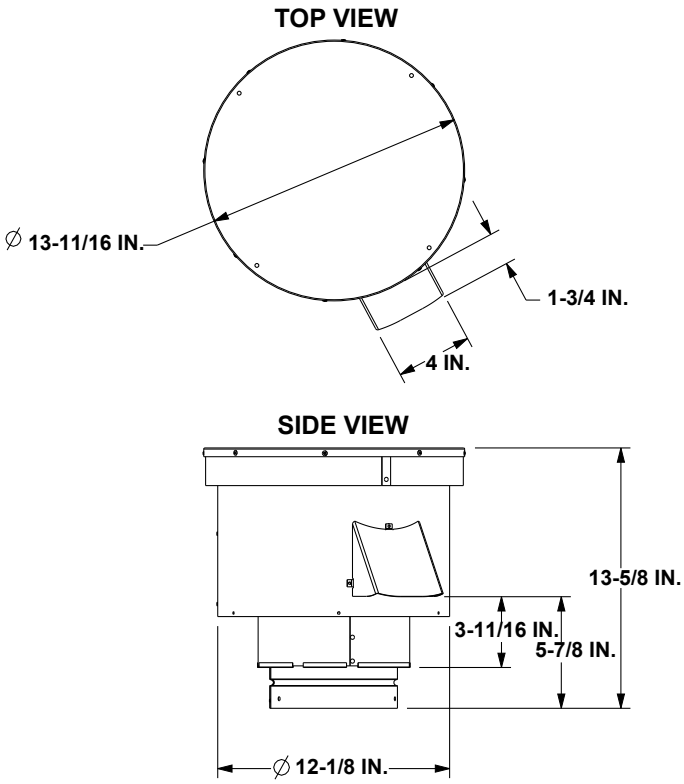

PVV-SLP
Vertical Power Vent

Required Wire Harness and PVV-SLEEVE	
Lengths Available	**Part Number**
10 ft. PV Wire Harness	PVI-WH10
20 ft. PV Wire Harness	PVI-WH20
40 ft. PV Wire Harness	PVI-WH40
60 ft. PV Wire Harness	PVI-WH60
80 ft. PV Wire Harness	PVI-WH80
100 ft. PV Wire Harness	PVI-WH100
Description	**Part Number**
12 in. Wire Harness Sleeve	PVV-SLEEVE-12
48 in. Wire Harness Sleeve	PVV-SLEEVE-48

Note: A wire harness is required to power the PVV-SLP and connect it to the appliance. It is ordered separately from the PVV-SLP. Contact your dealer to order.

Note: The PVV-SLEEVE-12 and/or PVV-SLEEVE-48 is required to be installed with the PVV-SLP. It is ordered separately from the PVV-SLP. Contact your dealer to order.

Note: The PVV-SLP requires one of the following options to be installed on this appliance.
Option A: IFT-RC400 **OR**
Option B: IFT-RC150 and IFT-ACM.
These accessories are purchased separately from the PVV-SLP. Contact your dealer to order.

Figure 12.6 PVV-SLP Vent Components

A. Vent Components Diagrams *(continued)*

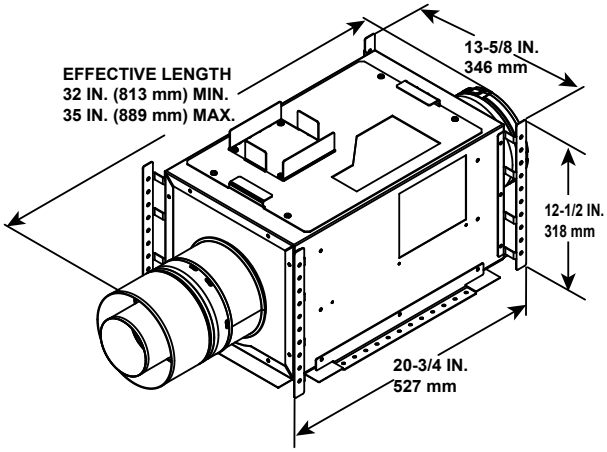

PVI-SLP-B
Power Vent Inline

Optional Wire Harness	
DESCRIPTION	**PART NUMBER**
10 FT PV Wire Harness	PVI-WH10
20 FT PV Wire Harness	PVI-WH20
40 FT PV Wire Harness	PVI-WH40
60 FT PV Wire Harness	PVI-WH60
80 FT PV Wire Harness	PVI-WH80
100 FT PV Wire Harness	PVI-WH100

Note: Wire harnesses required to power the PVI-SLP-B connect to the appliance and are ordered separately from PVI-SLP-B. Contact your dealer to order.

Note: The PVI-SLP-B requires one of the following options to be installed on this appliance.
Option A: IFT-RC400 **OR**
Option B: IFT-RC150 and IFT-ACM.
These accessories are purchased separately from the PVI-SLP-B. Contact your dealer to order.

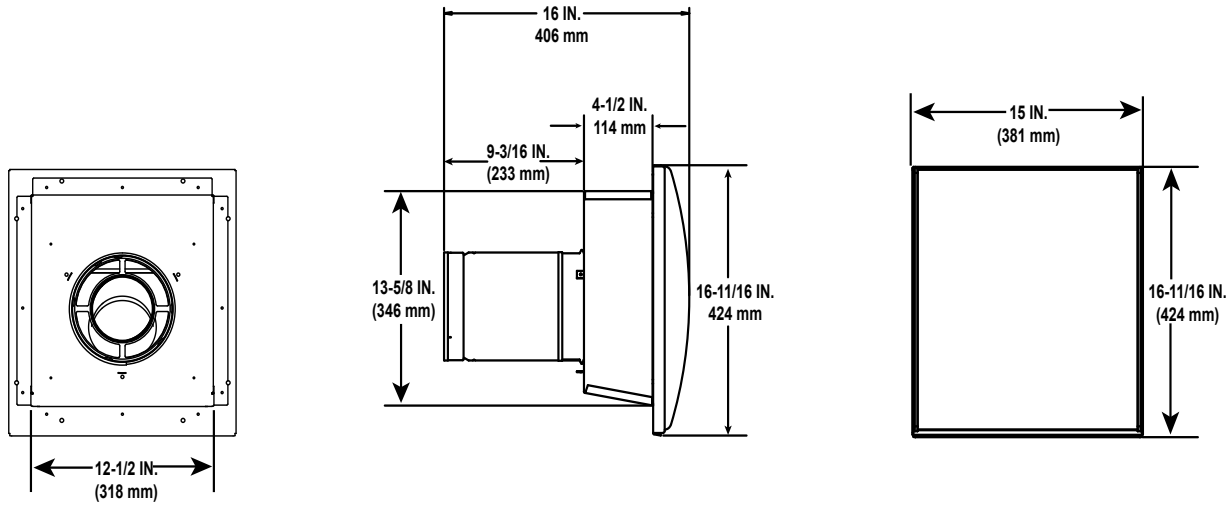

SLP-LPC
SLP Low Profile Cap
(Approved for use with PVI-SLP-B only)

Figure 12.6 PVI-SLP-B Vent Components

A. Vent Components Diagrams *(continued)*

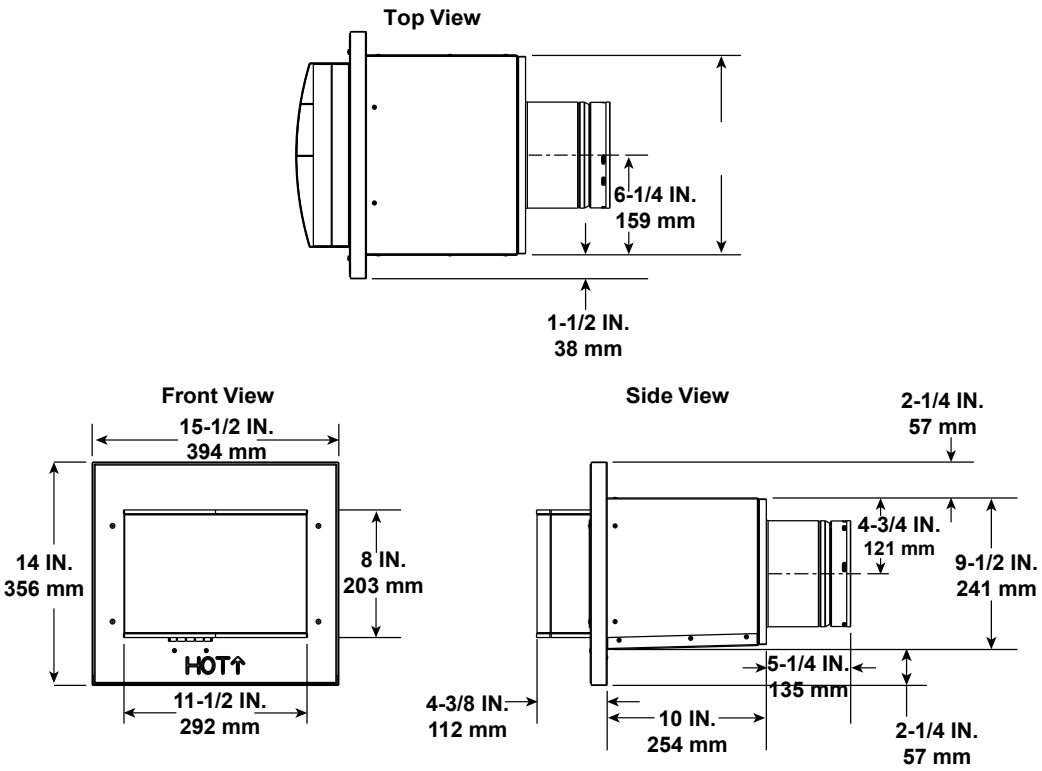

PVLP-SLP
Power Vent Low Profile

Note: Wire harnesses required to power the PVLP-SLP connect to the appliance and are ordered separately from PVLP-SLP. Contact your dealer to order.

Note: A PVLP-HS heat shield is available and sold separately. Use if the PVLP-SLP is installed in a high traffic area.

Note: The PVLP-SLP requires one of the following options to be installed on this appliance.
Option A: IFT-RC400 **OR**
Option B: IFT-RC150 and IFT-ACM
These accessories are purchased separately from the PVLP-SLP. Contact your dealer to order.

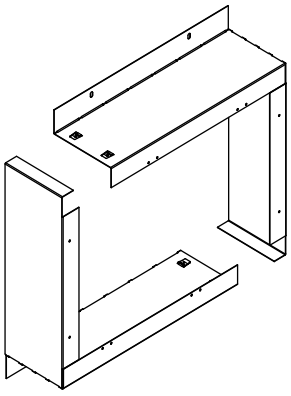

PVLP-BEK
Brick Kit

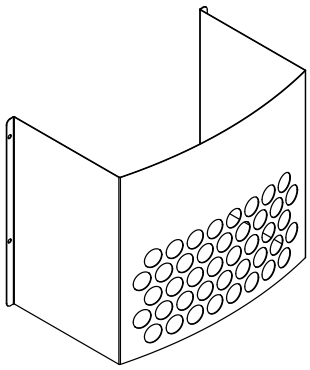

PVLP-HS
Heat Shield

Required Wire Harness	
DESCRIPTION	**PART NUMBER**
10 FT PV Wire Harness	PVI-WH10
20 FT PV Wire Harness	PVI-WH20
40 FT PV Wire Harness	PVI-WH40
60 FT PV Wire Harness	PVI-WH60
80 FT PV Wire Harness	PVI-WH80
100 FT PV Wire Harness	PVI-WH100

Figure 12.7 PVLP-SLP Vent Components

B. Accessories

WARNING! Risk of Fire and Electric Shock! *Use ONLY Hearth & Home Technologies-approved optional accessories with this appliance. Using non-listed accessories could result in a safety hazard and will void the warranty.*

Install approved accessories per instructions included with accessories. Contact your dealer for a list of approved accessories.

It is recommended that optional accessories are installed prior to installation of finishing material. The lower cover panel is removable and provides access for installation of the optional fan, LED kit and remote control upgrades. If finishing material is already installed, the optional accessories must be installed by removing the basepan, burner and valve assembly. Use only Hearth & Home Technologies-approved optional accessories with this appliance.

Remote Controls, Wall Controls and Wall Switches

Follow the instructions supplied with the control installed to operate your fireplace:

For safety:

- Install a switch lock or a wall/remote control with child protection lockout feature.
- Keep remote controls out of reach of children.

See your dealer if you have questions.

Optional Heat Management Systems

After a qualified service technician has installed the Heat-Zone® -Gas, Heat-Out-Gas Kit or Passive Heat Kit, follow the instructions supplied with the kit for operation. Contact your dealer if you have questions.

Note: Optional heat management systems kit must be installed while the top of the appliance is accessible.

Optional Fan

After a qualified service technician has installed the fan, follow the instructions supplied with the fan kit to operate your fan. Contact your dealer if you have questions.

Note: The optional fan can not be used with the Passive Heat kit.

Optional Glass Refractory Kit

An optional glass refractory kit is available for JADE32IN-B, JADE42IN-B and JADE42IL-B models. Follow the instructions supplied with the kit for installation. Contact your dealer if you have questions.

Optional Log Kits

Traditional or Driftwood Log kits are available for JADE32IN-B, JADE42IN-B and JADE42IL-B models. Follow the instructions supplied with the kit for installation. Contact your dealer if you have questions.

Optional LED Kit

An optional LED lighting kit is available for JADE32IN-B, JADE42IN-B and JADE42IL-B models. Follow the instructions supplied with the kit for installation and operation. Contact your dealer if you have questions.

Optional Stones Kit

An optional stones kit is available for use with the JADE32IN-B, JADE42IN-B and JADE42IL-B models. Follow the instructions supplied with the kit for installation. Contact your dealer if you have questions.

Majestic, a brand of Hearth & Home Technologies
7571 215th Street West, Lakeville, MN 55044

Printed in U.S.A. - Copyright 2023