ENGLISH

FORNO

Alta Qualita



COSENZA 24” BUILT-IN DRAWER FREEZER WITH ICE MAKER

MODEL NUMBER SERIES: FDRBI1838-24S

INSTRUCTION MANUAL

Read these instructions carefully before using your appliance, and keep them carefully.
If you follow the instructions, your appliance will provide you with many years of good service.

02/2026

TABLE OF CONTENTS

Customer Care	4
Safety	5
Product Contents	6
Installation	
Anti-tip bracket installation	7
Installing the handle	8
Important Information	8
Operating System	
Before Use	9
Control Panel	9
Removing and installing the drawers	10
Ice Maker connection	10
Cutout	12
Charcoal Filter Replacement	12
Care & Maintenance	12
Warranty	13

COSENZA 24” BUILT-IN DRAWER FREEZER WITH ICE MAKER

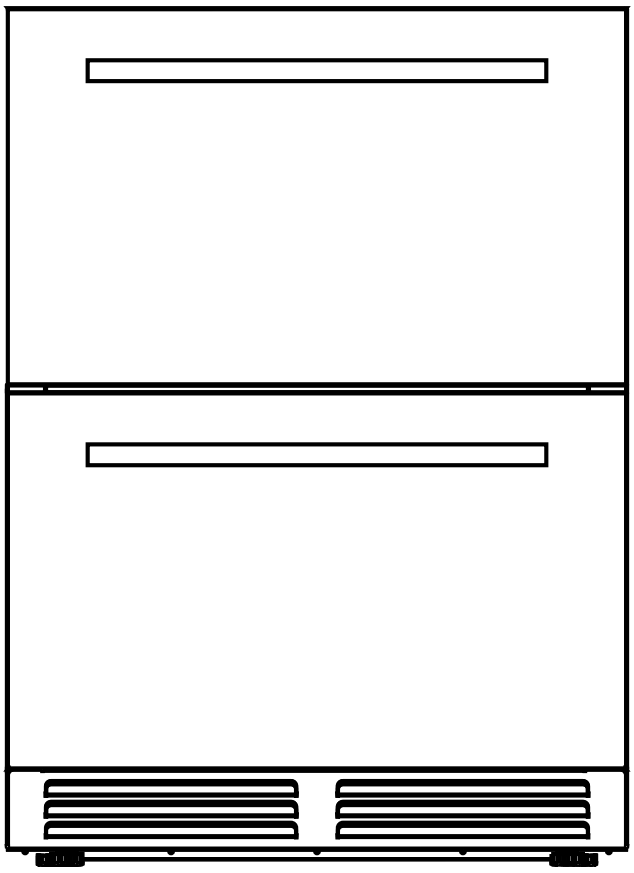

MODEL NUMBER SERIES: FDRBI1838-24S

Customer Care

Thank you for purchasing a Forno product. Please read the entire instruction manual before operating your new appliance for the first time. Whether you are an occasional user or an expert, it will be beneficial to familiarize yourself with the safety practices, features, operation and care recommendations of your appliance.

Both the model and serial number are listed inside the product. For warranty purposes, you will also need the date of purchase .

Record this information below for future reference.

Product Information	Service Information
Model Number: _____	Use these numbers in any correspondence or services calls concerning your product.
Serial Number: _____	If you received a damaged product, immediately contact Forno.
Date of Purchase: _____	Check the troubleshooting guide before you call for service. It lists the causes of minor operation problems that you can correct yourself.
Purchase Address And Phone: _____	
_____	

Services in Canada and Untied States
Keep the instruction manual handy to answer your questions. You can also find all the information you need on-line at www.forno.ca.
If you don’t understand something or need more assistance, please visit our website or email: info@forno.ca
If there is a problem, please contact FORNO customer service. Please note that troubleshooting with a customer service representative will be needed before being able to send a service provider. All warranty work needs to be authorized by FORNO customer service. All our authorized service providers are carefully selected and rigorously trained by us.

Safety

WARNING

- To prevent damaging the door gasket, make sure to have the door all the way opened when pulling shelves out of the rail compartment.
- The appliance must be positioned so that the plug is accessible. Release the electric cord. Move your cabinet to its final location. Do not move your Cabinet while loaded with wine. You might distort the body. The drawer freezer should be installed in a suitable place in order to avoid touching the compressor with hand.
- This appliance is not intended for use by persons (including children) with reduced physical, sensory or mental capabilities or lack of experience and knowledge, unless they have been given supervision or instruction concerning use of the appliance by a person responsible for their safety.
- If the supply cord is damaged, it must be replaced by manufacturer of its Service agent or a similarly qualified person in order to avoid a hazard.
-

PLEASE DON'T TRY TO PLUG INTO OR EXTENSION THE CABLE IN ANY CASE.

WARNING To reduce the risk of fire, electrical shock, or injury when using your appliance, follow these basic precautions:.

- Read all instructions before using the Drawer freezer.
- DANGER or WARNING: Risk of child entrapment.
- Child entrapment and suffocation are not problems of the past. Junked or abandoned appliances are still dangerous even if they will "just sit in the garage a few days".
- Before you throw away your old Drawer freezer: Take off the door. Leave the shelves in place so that children may not easily climb inside.
- Never allow children to operate, play with, or crawl inside the appliance.
- Never clean appliance parts with flammable fluids. The fumes can create a fire hazard or explosion.
- Do not store or use gasoline or any other flammable vapors and liquids in the vicinity of this or any other appliance. The fumes can create a fire hazard or explosion. Do not store explosive substances such as aerosol cans with a flammable propellant in this appliance.
- WARNING: Keep ventilation openings, in the appliance enclosure or in the built-in structure, clear of obstruction;
- WARNING: Do not use mechanical devices or other means to accelerate the defrosting process, other than those Recommended by the manufacturer;
- To avoid a hazard due to instability of the appliance, it must be fixed in accordance with the instructions.
- WARNING: Do not damage the refrigerant circuit;
- WARNING: Do not use electrical appliances inside the food storage compartments of the appliance, unless they are the type recommended by the manufacturer.

If the refrigerant of these appliances are R600a , Flammable and explosive articles should not be put in or near the cabinet, to avoid the fire or explode caused.

-Save these instructions-

Product Contents

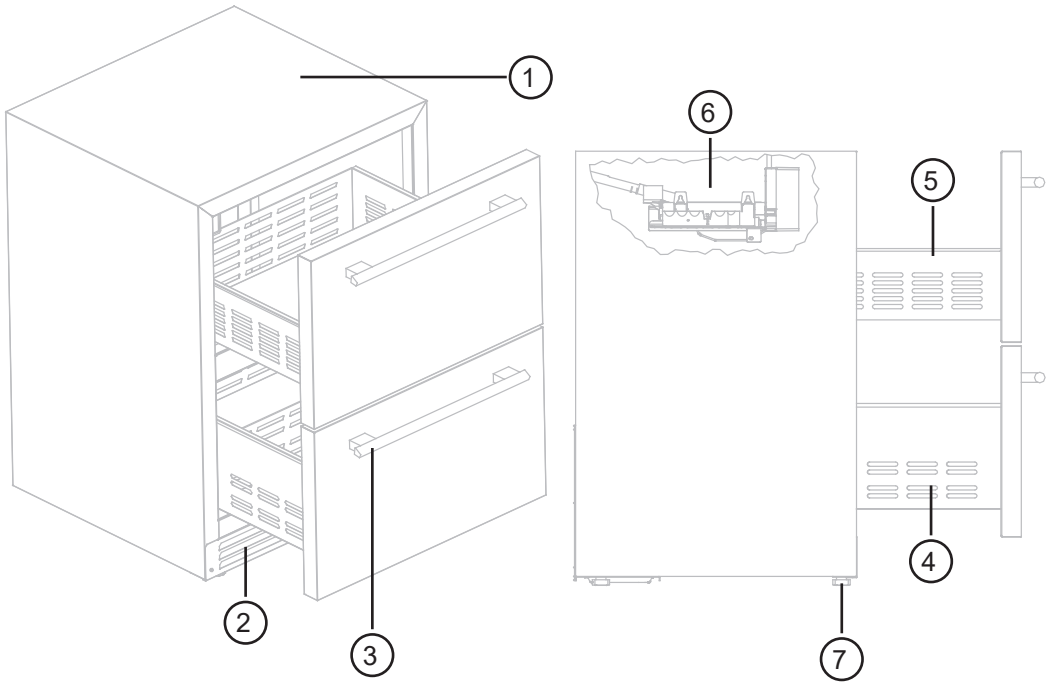

Names	
1	Cabinet housing
2	Ventilation
3	2x Handles
4	Bottom drawer
5	Top drawer
6	Ice maker
7	Leveling legs

Parts list (Supplied with the unit)	
	2x Anti-tip bracket with hardware
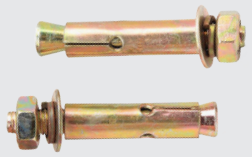	2x Expansion bolt
	1x Hexagon wrench
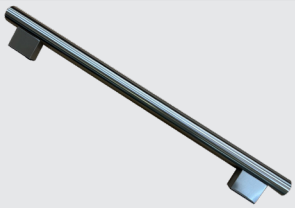	2x Handle with hardware
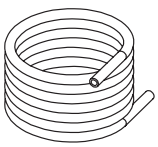	¼” water tubing 2.5 meter long

Installations

Before installing your freezer drawer, you must do the following:

- Remove the exterior and interior packing.
- Before connecting the freezer to the power source, let it stand upright for approximately 2 hours. This will reduce the possibility of a malfunction in the cooling system from handling during transportation.
- Clean the interior surface with lukewarm water using a soft cloth.
- This appliance is intended to be used in household and similar applications such as
  - Staff kitchen areas in shops, offices and other working environments;
  - Farm houses and by clients in hotels, motels and other residential type environments;
  - Bed and breakfast type environments;
  - Catering and similar non-retail applications.
- When disposing your appliance, please choose an authorized disposal site.

Anti-tip bracket installation

To avoid the risk of serious personal injury or damage to the appliance due to the instability of the appliance, it must be fixed to the floor with anti-tip brackets and screws(supplied). Before installing, carefully read these instructions.

1. Take the fixing brackets(2pcs) and the expansion bolts(2pcs) out of the instruction packet.

2. Drill holes into the floor according to the dimensions shown below. This will allow you to fix the brackets to the floor. According to the size and location, the holes on the floor should be Ø0.39” (10mm).

TIP: Use painter’s tape to judge how deep of a hole you are drilling. First, cut a piece of painter’s tape several inches long. Then, place the tape on your drill bit at the depth of the expansion bolts shield to drill. Once you reach the tape, you know when to stop drilling. Don’t drill too deep.

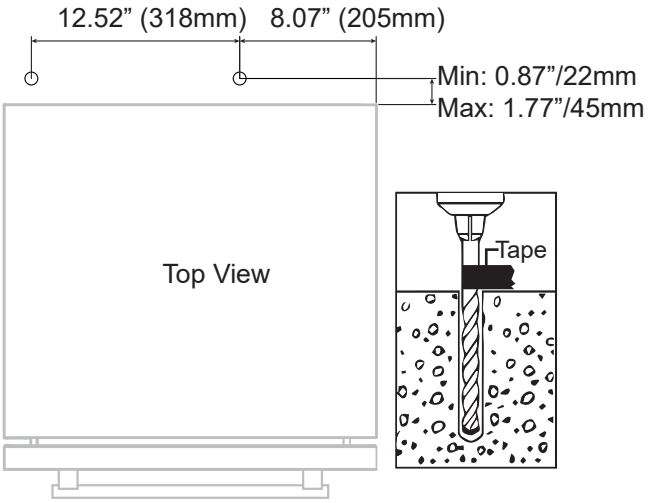

3. (A) Next insert the expansion bolt into the drilled hole. Make sure it is flush to the floor.
   (B) Unscrew the nut, washer and lock ring from the screw.

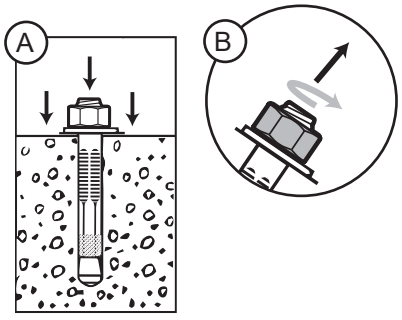

4. Next, align the bracket hole with the screw and reattach the washer and lock ring. Finally, tighten the nut with a wrench or socket to the maximum. As you tighten the shield, it will bend outwards, creating an anchor that provides extra security for your unit.

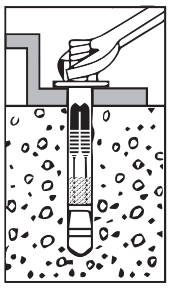

5. Push the appliance back into its place, Ensure that the bottom of the opening slides under the bracket, as shown in the example below.

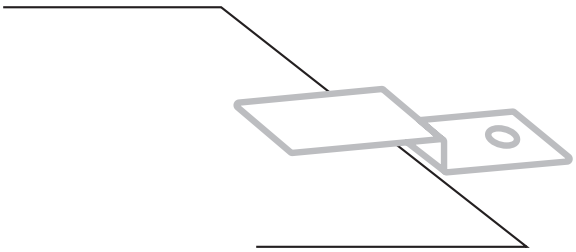

If the unit is not stable, pull back the appliance and repeat the previous step until the unit is stable. Note: If the unit is relocated, the bracket must be removed and re-installed to its new location.

Installations (continued)

Installing The Handle

1. Locate the handle over the pins on the door panel.
2. Fix the handle by tighten the screw.

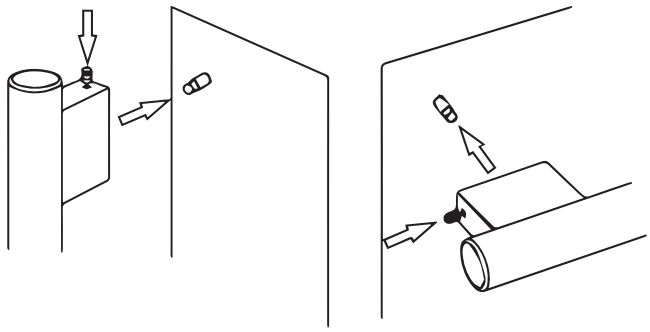

This appliance is designed to be for free-standing installation or built-in (fully recessed) (Refer to sticker location the back of this appliance).

Important Information

This appliance is only intended for storing items suitable for temperatures ranging from -18ºC (64.4ºF) to 0ºC (32ºF).

Here are some important guidelines that you should keep in mind while handling your appliance:

- Make sure that the floor or base on which you place your appliance is strong enough to support it when it is fully loaded.
- To level your Drawer freezer, adjust the front leveling leg located at the bottom of the Drawer freezer.
- This appliance uses a flammable refrigerant, so it's crucial to avoid damaging the cooling pipework during transportation.
- To ensure that your Drawer freezer operates efficiently, it is important to keep it away from direct sunlight, heat sources such as a stove, heater, or radiator, and extremely cold ambient temperatures. Direct sunlight can damage the acrylic coating, while heat sources may increase electrical consumption. It is also important to note that the unit may not perform properly in extremely cold temperatures.
  Avoid locating the unit in appliance areas.
- Ensure that you plug the appliance into an exclusive, properly installed-grounded wall outlet. Do not, under any circumstances, cut or remove the third (ground) prong from the power cord. If you have any questions concerning power and/or grounding, please direct them to a certified electrician or an authorized product service center.

Please make sure to follow these **dos and don'ts** when using the cabinet:

- Don't overload the items in the cabinet.
- Don't open the door unless necessary.
- Don't cover shelves with aluminum foil or any other material which may prevent air circulation.
- If the drawer freezer is stored without use for long periods, it is suggested to leave the door ajar after a careful cleaning to allow air circulation inside the cabinet. This will help to avoid possible formations of condensation, mold, or odors.

In case the appliance loses power or gets unplugged, it is important to wait for 3-5 minutes before starting it again. The cause for starting the appliance immediately can add more pressure to an already high-pressure compressor causing damage to the compressor due to an overload of pressure.

Operation

Ambient Room Temperature Limits:

This appliance is designed to operate in temperatures specified by its temperature class on the rating plate.

Class:	Symbol	Ambient Temperatures range(ºC / ºF)
Extended Temperate	SN	+10ºC/ 50ºF to +32ºC / 89.6ºF
Temperate	N	+16ºC / 60.8ºF to +32ºC / 89.6ºF
Subtropical	ST	+16ºC / 60.8ºF to +38ºC / 100.4ºF
Tropical	T	+16ºC / 60.8ºF to +43ºC / 109.4ºF

Before use:

Please plug the appliance into a power outlet first, then Press and hold the lock button for 3 second to unlock the control panel, then touch the button + or − to adjust the desired temperature.

Control Panel

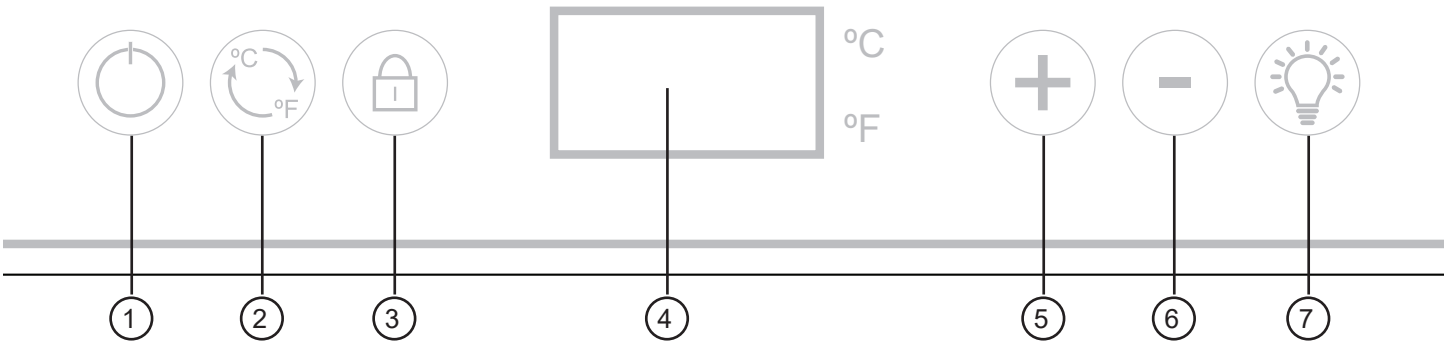

Names		Function
1	Power button	Press and hold for 3 seconds to turn the appliance on or off.
2	Temperature button	Press to switch between Celsius and Fahrenheit temperature display.
3	Lock button	Press and hold for 3 seconds to lock the control panel. The light button will still work. Press the lock button again to unlock the control panel.
4	LED display	2-digit LED display
5 & 6	Plus / Minus button	The “+” and “-” buttons are used to adjust the temperature. Each press of the button will increase or decrease the temperature by 1ºF / 1ºC.
7	Light button	Press to turn the light on or off.
8	Sabbath mode	To enter Sabbath mode, press and hold “+” button for 3 seconds to activate the feature. The appliance will automatically exit Sabbath mode after 42 hours. Alternatively, you can manually exit Sabbath mode. Note that in Sabbath mode, the light will not work, but the compressor will continue to run.

Operation (continued)

Setting The Temperature Controls

- When you push the “+” or “-” buttons for the first time, The LED display will show the temperature that is currently on.
- To adjust the temperature, simply press the “+” or “-” buttons. Each press of the “+” button will increase the temperature by 1ºC, while each press of the “-” button will decrease the temperature by 1ºC.
- To select the temperature, stay on the chosen temperature until the flashing stops. The temperature setting can be adjusted from -18ºC. to 0ºC.

Removing and installing the drawers

To Remove the drawers.

1. Open the drawer completely all the way.
2. On the sliding track on both sides of the drawer, there is a locking bar (A & B). On the left side (A) push down the locking bar and at the same time , on the right side (B) lift up the locking bar. While holding the locking bar in position, gentile pull the drawer towards you. Keep pulling slowly until is fully remove from the track.

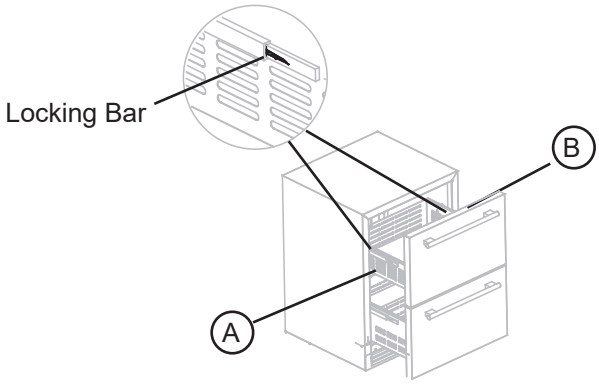

3. To re-install the drawers, place the track (C) parallel to the slot (D) and push in the drawer. Have a test run to verify if the installation is done properly.

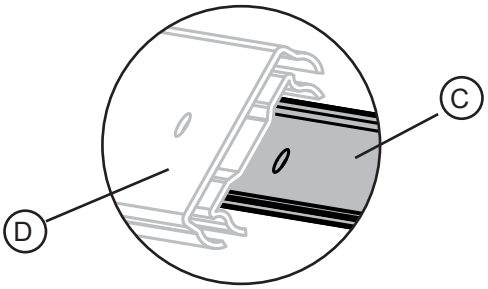

Ice Maker Connection

Water valve installation instructions

1. Before connecting the ice maker, ensure it is not near any energy sources.
2. It is recommended to use a water filter system to remove particles that may travel to the valve.
3. A cold water supply. The water pressure must be between 15 and 120 p.s.i. (1.0–8.1 bar).

The following items are required to install the ice maker:

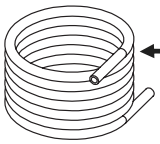

NOTE: Coil enough tubing in the back of the appliance to allow movement of the freezer for cleaning.

Connect the freezer to a water source:

Step 1:
Turn the unit around so the “back” is facing you.

Ice Maker Installation (continued)

Step 2:
The Image below is where the push-fit connector is located. Note: The grill is remove for demonstration only.

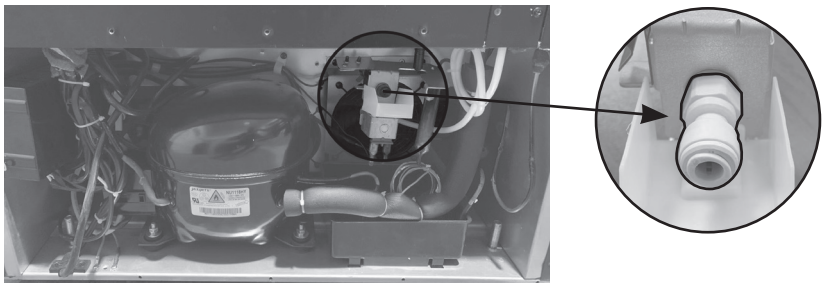

Step 3:
No tools require for this step. You **Do Not** have to remove the grill for this connection. To connect, insert the water tube through the grill into the push-fit connector. Stop until you feel resistance. To verify if the connection is done properly, yank the tube gently. If the tube fall out, repeat the step until you feel a tuck. Finally, push the appliance back into its original location.

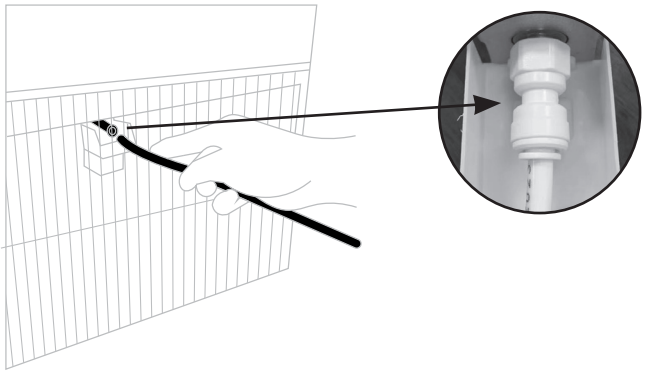

Step 4:
Before starting the appliance, it's important to manually turn on the ice maker. To do this, open the top drawer and locate the ice maker on the left side at the top. You will see a wire arm on the left side that you need to adjust in order to activate or deactivate the ice maker. To activate the ice maker, simply push down the wire arm. To deactivate it, lift the wire arm upwards.

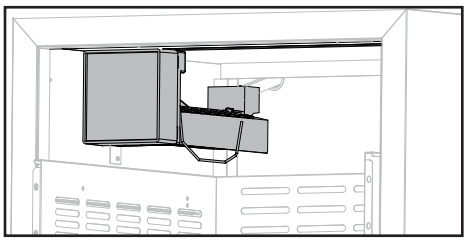

Ice maker location

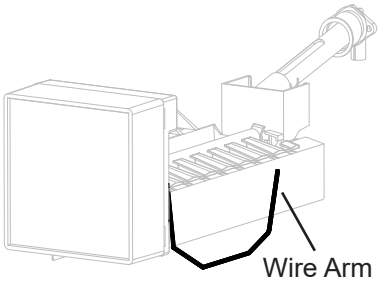

Wire Arm

Deactivate / Off

Activate / On

The ice maker is designed with an automatic shutoff feature. As the ice cubes are made, they will fill the ice storage bin and cause the wire arm to rise to the Off position. This process happens automatically and does not require any manual intervention to pull the wire arm up or down. It takes approximately 24 hours for the ice maker to produce ice. New plumbing may cause ice discoloration and poor flavor. Discard ice made in the first 24 hours.

Ice Storage Bin
Turn off the ice maker before removing the ice storage bin to serve ice or to clean the bin. This will keep the ice cubes from dropping out of the ice maker and into the freezer compartment. After replacing the ice storage bin, turn on the ice maker.

- Wash the ice storage bin with mild soap and warm water.
- Slide the ice storage bin under the ice maker and push it toward the back as far as it will go.
- Lower the arm on the ice maker to the On position.

Cutout

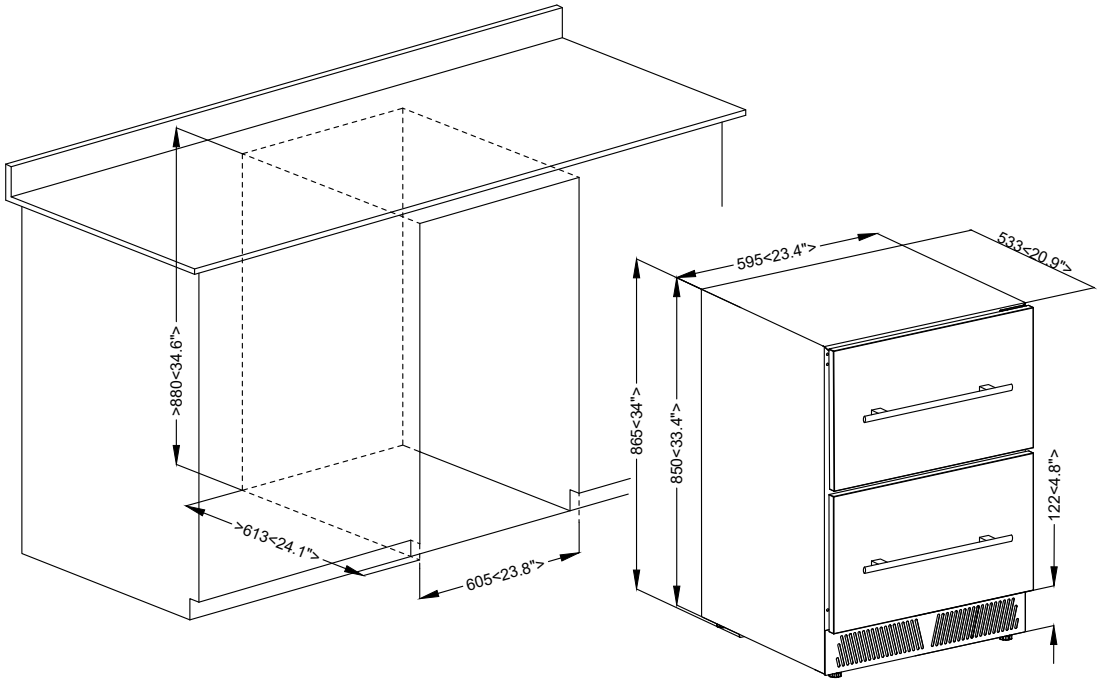

Charcoal filter replacement

In order to preserve the quality and taste of your food, they must be stored at the ideal temperature and ambient conditions. Your freezer is equipped with an active charcoal filtration system to ensure air purity, cooling efficiency, and to maintain an odor free cabinet for the storage of your food. The filter assembly is located at the rear panel inside your freezer. Keep in mind, that this filter must be changed every 12 months.

To replace your filter:

1. Rotate the filter counter-clockwise to 45º and carefully pull out the filter.
2. Replace the filter with a new one and repeat step 1 but clockwise. Don't over tighten it.

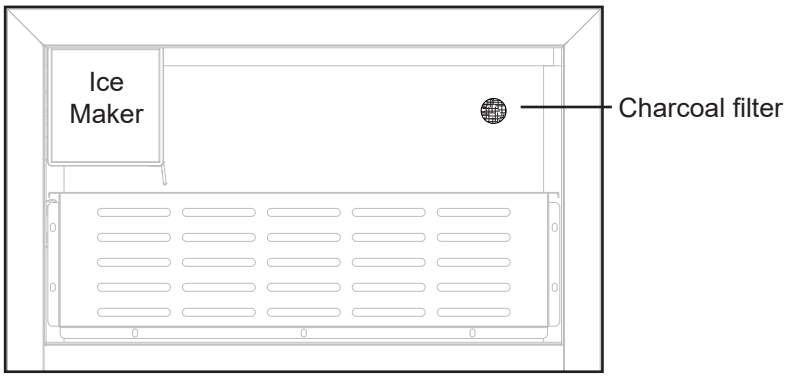

Front view

Care & Maintenance

To clean your appliance, start by turning off the power, unplugging it, and removing all items including shelves and racks. Next, use a solution of warm water and mild liquid detergent to wash the inside surfaces and drawers. Rinse well and then wipe dry with a clean, soft cloth. This will ensure that your appliance is clean and ready for use.

Warranty

What this limited warranty covers:
The Warranty coverage provided by Forno Appliances in this statement applies exclusively to the original Forno appliance (“Product”) sold to the consumer (“Purchaser”) by an authorized Forno dealer/distributor/retailer, purchased and installed in the United States or Canada, and which has always remained within the original country of purchase (the United States or Canada). Warranty coverage is activated on the date of the Product’s original retail purchase and has a duration of two (2) years.

Warranty coverage is non-transferable. In the event of replacement of parts or of the entire product, the replacement Product (or parts) shall assume the remaining original Warranty activated with the original retail purchase document. This Warranty shall not be extended with respect to such replacement. Forno Appliances will repair or replace any component/part which fails or proves defective due to materials and/or workmanship within 2 years of the date of the original retail purchase and under conditions of ordinary residential, non-commercial use. Repair or replacement will be free of charge, including labor at standard rates and shipping expenses. Purchaser is responsible for making the Product reasonably accessible for service. Repair service must be performed by a Forno Authorized Service company during normal working hours.

Important
Retain proof of original purchase to establish warranty period. Forno’s liability on any claim of any kind, with respect to the goods and/or services provided, shall in no event exceed the value of the goods or service or part there of which has given rise to the claim.

30-Day Cosmetic Warranty
The Purchaser must inspect the product at the time of delivery. Forno warrants that the Product is free from manufacturing defects in materials and workmanship for a period of thirty (30) days from date of the original retail purchase of the Product.

This coverage includes:
- Paint blemishes
- Chips
- Macroscopic finish defects

Cosmetic warranty does NOT cover:
- Issues resulting from incorrect transport, handling and/ or installation (e.g.: dents, broken, warped or deformed structures or components, cracked or otherwise damaged glass components);
- Slight color variations on painted/enameled components;
- Differences caused by natural or artificial lighting, location or other analogous factors; > stains/corrosion/ discoloration caused by external substances and/ or environmental factors; > labor costs, display, floor, B-stock, out- of-box,“as is” appliances and demo units.

How to receive service
To receive warranty services, the Purchaser must contact the Forno Support department in order to determine the problem and the required service procedures. Troubleshooting with a customer service representative will be necessary before moving forward with the service. Model number, serial number and date of original retail purchase will be requested.

Warranty Exclusions: What Is Not Covered.
- Use of the Product in any non-residential, commercial application.
- Use of the Product for anything other than its intended purpose.
- Repair services provided by anyone other than a Forno Authorized Service agency.
- Damages or repair services to correct services provided by unauthorized parties or the use of unauthorized parts.
- Installation not in accordance with local/state/city/county fire codes, electrical codes, gas codes, plumbing codes, building codes, laws or regulations.
- Defects or damage due to improper storage of the Product.
- Defects, damage or missing parts on products sold out of the original factory packaging or from displays. > Service calls or repairs to correct an incorrect installation of the Product and/or related accessories.
- Replacement of parts/service calls to connect, convert or otherwise repair the electrical wiring and/or gas line in order to properly use the product.
- Replacement of parts/service calls to provide instructions and information on the use of the Product.
- Replacement of parts/service calls to correct issues arising from the product being used in a manner other than what is normal and customary for residential use.
- Replacement of parts/service calls due to wear and tear of components such as seals, knobs, pan supports, shelving, cutlery baskets, buttons, touch displays, scratched or broken ceramic-glass tops.
- Replacement of parts/service calls for lack of/improper maintenance, including but not limited to: build up of residues, stains, scratches, discoloration, corrosion.
- Defects and damages arising from accidents, alteration, misuse, abuse or improper installation.
- Defects and damages arising from Product transport, logistics and handling. Inspection of the product must be made at time of delivery. Following receipt and inspection, the selling dealer/delivery company must be notified of any issues arising from handling, transport and logistics.
- Defects and damages arising from external forces beyond the control of Forno Appliances, including but not limited to wind, rain, sand, fires, floods, mudslides, freezing temperatures, excessive moisture or extended exposure to humidity, power surges,
- Lightning, structural failures surrounding the appliance and other acts of God.
- Products whose serial number has been altered/ damaged/tampered with. In no case shall Forno be held liable or responsible for damage to surrounding property, including furniture, cabinetry, flooring, panels, and other structures surrounding the Product. Forno is neither liable nor responsible for the Product if it is located in a remote area or an area where certified trained technicians are not reasonably available. Purchaser must bear any transportation and delivery costs of the Product to the nearest Authorized Service Center or the additional travel expenses of a certified trained technician

Warranty (continued)

THERE ARE NO EXPRESS WARRANTIES OTHER THAN THOSE LISTED AND DESCRIBED ABOVE, AND NO WARRANTIES, EITHER EXPRESS OR IMPLIED, INCLUDING, BUT NOT LIMITED TO, ANY IMPLIED WARRANTIES OF MERCHANTABILITY OR FITNESS FOR A PARTICULAR PURPOSE THAT SHALL APPLY AFTER THE EXPRESS WARRANTY PERIODS STATED ABOVE, AND NO OTHER EXPRESS WARRANTY OR GUARANTEE GIVEN BY ANY PERSON, FIRM OR CORPORATION WITH RESPECT TO THIS PRODUCT SHALL BE BINDING ON FORNO. FORNO SHALL NOT BE LIABLE FOR LOSS OF REVENUE OR PROFITS, FAILURE TO REALIZE SAVINGS OR OTHER BENEFITS, TIME AWAY FROM WORK, MEALS, LOSS OF FOOD OR BEVERAGES, TRAVELING OR HOTEL EXPENSES, EXPENSES TO RENT OR PURCHASE APPLIANCES, REMODELING/CONSTRUCTION EXPENSES IN EXCESS OF DIRECT DAMAGES WHICH ARE UNDENIABLY CAUSED EXCLUSIVELY BY FORNO OR ANY OTHER SPECIAL, INCIDENTAL OR CONSEQUENTIAL DAMAGES CAUSED BY THE USE, MISUSE OR INABILITY TO USE THIS PRODUCT, REGARDLESS OF THE LEGAL THEORY ON WHICH THE CLAIM IS BASED, AND EVEN IF FORNO HAS BEEN ADVISED OF THE POSSIBILITY OF SUCH DAMAGES. NOR SHALL RECOVERY OF ANY KIND AGAINST FORNO BE GREATER IN AMOUNT THAN THE PURCHASE PRICE OF THE PRODUCT SOLD BY FORNO AND CAUSING THE ALLEGED DAMAGE. WITHOUT PREJUDICE TO THE FOREGOING, PURCHASER ASSUMES ALL RISK AND LIABILITY FOR LOSS, DAMAGE OR INJURY TO PURCHASER AND PURCHASER'S PROPERTY AND TO OTHERS AND THEIR PROPERTY ARISING FROM THE USE, MISUSE, OR INABILITY TO USE THIS PRODUCT SOLD BY FORNO THAT IS NOT A DIRECT RESULT OF NEGLIGENCE ON THE PART OF FORNO THIS LIMITED WARRANTY SHALL NOT EXTEND TO ANYONE OTHER THAN THE ORIGINAL PURCHASER OF THIS PRODUCT, IS NON-TRANSFERABLE, AND STATES YOUR EXCLUSIVE REMEDY.

WARNING: This product can expose you to chemicals including [Lead & Lead Compounds], which is [are] known to the State of California to cause cancer, birth defects and / or reproductive harm. To minimize exposure to these substances. Always operate this unit according the Owner's Manual, and ensure that you provide proper ventilation. For more information go to www.P65Warnings.ca.gov



Correct Disposal of this product:
This marking indicates that this appliance should not be disposed with other household wastes. To prevent possible harm to the environment or human health from uncontrolled waste disposal, recycle it responsibly to promote the sustainable reuse of material resources.



Customer Support: Call 1-866-231-8893 or email: info@forno.ca