Installation Manual

Installation and Fireplace Setup

INSTALLER: Leave this manual with party responsible for use and operation.
OWNER: Retain this manual for future reference.

***NOTICE: DO NOT** discard this manual!*

outdoor lifestyles
by hearth & home technologies®

Model(s):

ODCASTLEWD-50

UL LISTED

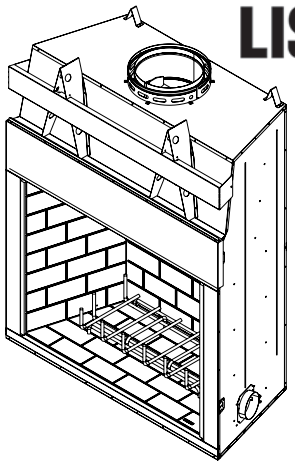

WOODBURNING FIREPLACE

Installation and service of this appliance should be performed by qualified personnel. Hearth & Home Technologies recomends HHT Factory Trained or NFI certified professionals.

hearthED FACTORY TRAINING Fuel Your Fire

NFI NATIONAL FIREPLACE INSTITUTE® A CERTIFICATION AGENCY

⚠ WARNING: If the information in these instructions is not followed exactly, a fire or explosion may result causing property damage, personal injury, or death.

- **DO NOT** store or use gasoline or other flammable vapors and liquids in the vicinity of this or any other appliance.
- **DO NOT** overfire. Overfiring will void your warranty.
- Comply with all minimum clearances to combustibles as specified. Failure to comply may cause house fire.

⚠ WARNING

HOT SURFACES!
Glass and other surfaces are hot during operation AND cool down.

Hot glass will cause burns.
- **DO NOT** touch glass until it is cooled
- NEVER allow children to touch glass
- Keep children away

- CAREFULLY SUPERVISE children in same room as fireplace.
- Alert children and adults to hazards of high temperatures.

High temperatures may ignite clothing or other flammable materials.
- Keep clothing, furniture, draperies and other flammable materials away.

⚠ WARNING

Fire Risk.

For use with solid wood fuel only.
Other fuels may overfire and generate poisonous gases (i.e. carbon monoxide).

Safety Alert Key:

- ***DANGER!*** Indicates a hazardous situation which, if not avoided will result in death or serious injury.
- ***WARNING!*** Indicates a hazardous situation which, if not avoided could result in death or serious injury.
- ***CAUTION!*** Indicates a hazardous situation which, if not avoided, could result in minor or moderate injury.
- ***NOTICE:*** Indicates practices which may cause damage to the fireplace or to property.

Table of Contents

1 Product Specific & Important Safety Information
A. Appliance Certification 4
B. Non-Combustible Materials 4
C. Combustible Materials 4

2 Getting Started
A. Typical Fireplace System 5
B. Design and Installation Considerations 6
1. Selecting Fireplace Locations 6
2. Locating Fireplace & Chimney 7
C. Tools and Supplies Needed 8
D. Inspect Fireplace and Components 8
E. Fireplace System Requirements 8

3 Framing and Clearances
A. Appliance Dimensions/Weight 9
B. Clearances 10
Minimum Clearances to Combustibles 10
C. Construct the Chase 11
D. Frame the Fireplace 12
E. Secure and Level the Fireplace 14
F. Protective Metal Hearth Strips 14
G. Outside Air Kit 14

4 Chimney and Termination Installation
A. Chimney Requirements 16
B. Clearances 18
C. Installation Notes 18
D. Frame Openings 18
E. Cut Roof Opening 18
F. Install Firestop 18
G. Assemble Chimney Sections 19
H. Using Offsets/Returns 19
I. Offset Elbow Installation 20
J. Supplementary Support & Stabilizer 20
K. Install Attic Insulation Shield 21
L. Install Roof Radiation Shields 21
M. Attach Flashing 21
Field-Constructed Chase Top Flashing 22
N. Finish Top 23
O. Chimney Termination Requirements 24

5 Shrouds
A. Shroud Requirements 25
B. House Style Shroud 26
C. Arch / Mailbox Style Shroud 27
D. Pyramid Style Shroud 27

6 Finishing
A. Finishing Material 28
B. Hearth Extension, Building and Finishing 30
1. Fireplace Installed Flush on the Floor and Hearth Extension Raised to Bottom of Firebox Opening 30
2. Raised Hearth Extension and Raised Fireplace 31
3. Fireplace Opening and Hearth Extension Flush with the Floor 32
C. Non-Combustible Sealant Material 33
D. Mantel and Wall Projections 34
E. Sidewalls/Surrounds 35

7 Fireplace Setup
A. Refractory Panel Kit In Crate 36
B. Install Hearth Molded Brick Panel 36
C. Install Back Molded Brick Panel 36
D. Install Side Molded Brick Panel 36
▶ E. Firebrick Installation 37
F. Install Screens 39
G. Install Mortar (Optional) 39
H. Grate 39
I. Gas Log/Lighter Provision 40
J. Wood Burning Inserts 40

8 Reference Materials
A. Chimney Components 41
B. Optional Components 41

ATTENTION INSTALLER:

Follow this Standard Work Checklist

This standard work checklist is to be used by the installer in conjuction with, not instead of, the instructions contained in this installation manual.

Customer: _____
Lot/Address _____
_____
Model (circle one): ODCASTLEWD-50

Date Installed: _____
Location of Fireplace: _____
Installer: _____
Dealer/Distributor Phone # _____
Serial #: _____

WARNING! Risk of Fire or Explosion! *Failure to install fireplace acording to these instructions can lead to a fire or explosion.*

Fireplace Install	**YES**	**IF NO, WHY?**
Verified that the chase is insulated and sealed. (Pg. 11)	☐	
Verified clearances to combustibles. (Pg. 10)	☐	
Fireplace is leveled and secured. (Pg. 14)	☐	
Protective hearth strips installed per manual requirements. (Pg. 14)	☐	
Hearth extension size/height decided. (Pg. 29)	☐	
Outside air kit installed. (Pg. 15)	☐	
Chimney Section 4 & 5 (Pg. 16)		
Chimney configuration complies with diagrams.	☐	
Chimney installed, locked and secured in place with proper clearance.	☐	
Chimney air kit installed.	☐	
Firestops installed.	☐	
Attic insulation shield installed.	☐	
Roof flashing installed.	☐	
Termination installed.	☐	
Shrouds Section 6 (Pg. 26)		
Shroud is installed properly per instructions.	☐	
Finishing Section 7 (Pg. 28)		
Combustible materials not installed in non-combustible areas.	☐	
Verified all clearances meet installation manual requirements.	☐	
Mantels and wall projections comply with installation manual requirements.	☐	
Hearth extension installed per manual requirements.	☐	
Fireplace Setup Section 8 (Pg. 35)		
All packaging and protective materials removed.	☐	
Molded brick panels installed correctly.	☐	
Grate is properly installed.	☐	
Firescreen installed properly.	☐	
Optional doors properly installed.	☐	
Manual bag and all of its contents are removed from the fireplace and given to the party responsible for use and operation.	☐	

Hearth & Home Technologies recommends the following:

- Photographing the installation and copying this checklist for your file.
- That this checklist remain visible at all times on the fireplace until the installation is complete.

Comments: Further description of the issues, who is responsible (Installer/Builder/Other Trades, etc.) and corrective action needed:

_____

_____

_____

Comments communicated to party responsible _____ by _____ on _____
(Builder/Gen. Contractor) (Installer) (Date)

4170-982 • Rev A • 8-15-25

1 Product Specific & Important Safety Information

A. Appliance Certification

This fireplace system has been tested and listed in accordance with UL 127 standards by Underwriters Laboratories Inc. for installation and operation in the United States.

This fireplace may be installed in sleeping rooms EXCEPT in manufactured homes. If installed with a gas log set, provisions for the National Fuel Gas Code must be met.

This fireplace has been tested and listed for use with the optional components specified in this manual. These optional components may be purchased separately and installed at a later date. The outside air kits must be installed at the time of fireplace installation.

WARNING! Risk of Fire! *Hearth & Home Technologies disclaims any responsibility for, and the warranty and agency listing will be voided by the following actions.*

DO NOT:

- *install or operate damaged fireplace*
- *modify fireplace*
- *install other than as instructed by Hearth & Home Technologies*
- *operate the fireplace without fully assembling all components*
- *overfire*
- *install any component not approved by Hearth & Home Technologies*
- *install parts or components not Listed or approved*

Improper installation, adjustment, alteration, service or maintenance can cause injury or property damage. For assistance or additional information, consult a qualified installer, service agency or your dealer.

⚠ WARNING: This product and the fuels used to operate this product (wood and wood pellets), and the products of combustion of such fuels, can expose you to chemicals including carbon black, which is known to the State of California to cause cancer and carbon monoxide, which is known to the State of California to cause birth defects or other reproductive harm. For more information go to: www.P65Warnings.ca.gov.

B. Non-Combustible Materials

- Materials which will not ignite and burn, composed of any combination of the following:
  - Steel
  - Brick
  - Concrete
  - Glass
  - Iron
  - Tile
  - Slate
  - Plasters
- Materials reported as passing **ASTM E 136, Standard Test Method for Behavior of Metals, in a Vertical Tube Furnace at 750° C**

C. Combustible Materials

- Materials made of or surfaced with any of the following materials:
  - Wood
  - Plant fibers
  - Plywood/OSB
  - Compressed paper
  - Plastic
  - Sheet rock (drywall)
- Any material that can ignite and burn; flame proofed or not, plastered or un-plastered

2 Getting Started

A. Typical Fireplace System

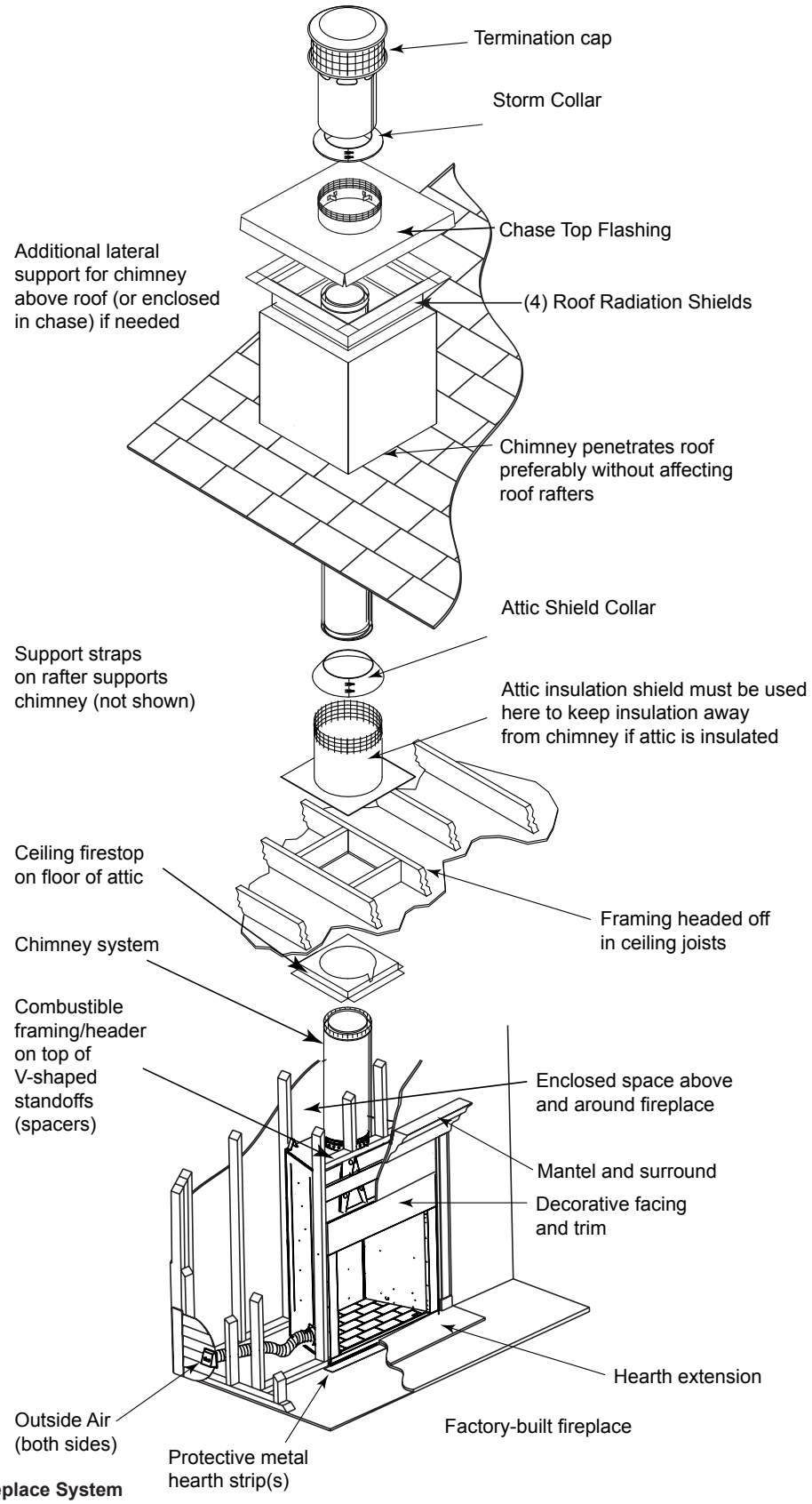

Figure 2.1 Typical Fireplace System

B. Design and Installation Considerations

NOTICE: *Check building codes prior to installation.*

- Installation MUST comply with local, regional, state and national codes and regulations.
- Consult insurance carrier, local building inspector, fire officials or authorities having jurisdiction over restrictions, installation inspection and permits.
- **Before installing**, determine the following:
  - Where the fireplace is to be installed.
  - The vent system configuration to be used.
  - Gas supply piping.
  - Electrical wiring.
  - Framing and finishing details.
  - Whether optional accessories - devices such as a fan, wall switch or remote control - are desired

1. Selecting Fireplace Locations

This fireplace may be used as a room divider, installed along a wall, across a corner or used in an exterior chase. See Figure 2.2.

Locating the fireplace in a basement should be avoided. Locating near frequently opened doors, central heat outlets or returns, or other locations of considerable air movement can affect the performance.

Consideration should be given to these factors before deciding on a location.

NOTICE: *In addition to these framing dimensions, also reference the following section:*

- *Clearances (Section 3).*

NOTICE:

- *Illustrations and photos reflect typical installations and are FOR DESIGN PURPOSES ONLY.*
- *Illustrations/diagrams are not drawn to scale.*
- *Actual installation/appearance may vary due to individual design preference.*
- *Hearth & Home Technologies reserves the right to alter its products.*

NOTICE:
A minimum 1-1/2 in. air clearance at the back and a minimum 1-1/2 in. air clearance to the sides of the fireplace assembly must be maintained.

Chimney sections at any level require a 2 in. minimum air space clearance between the framing and chimney sections.

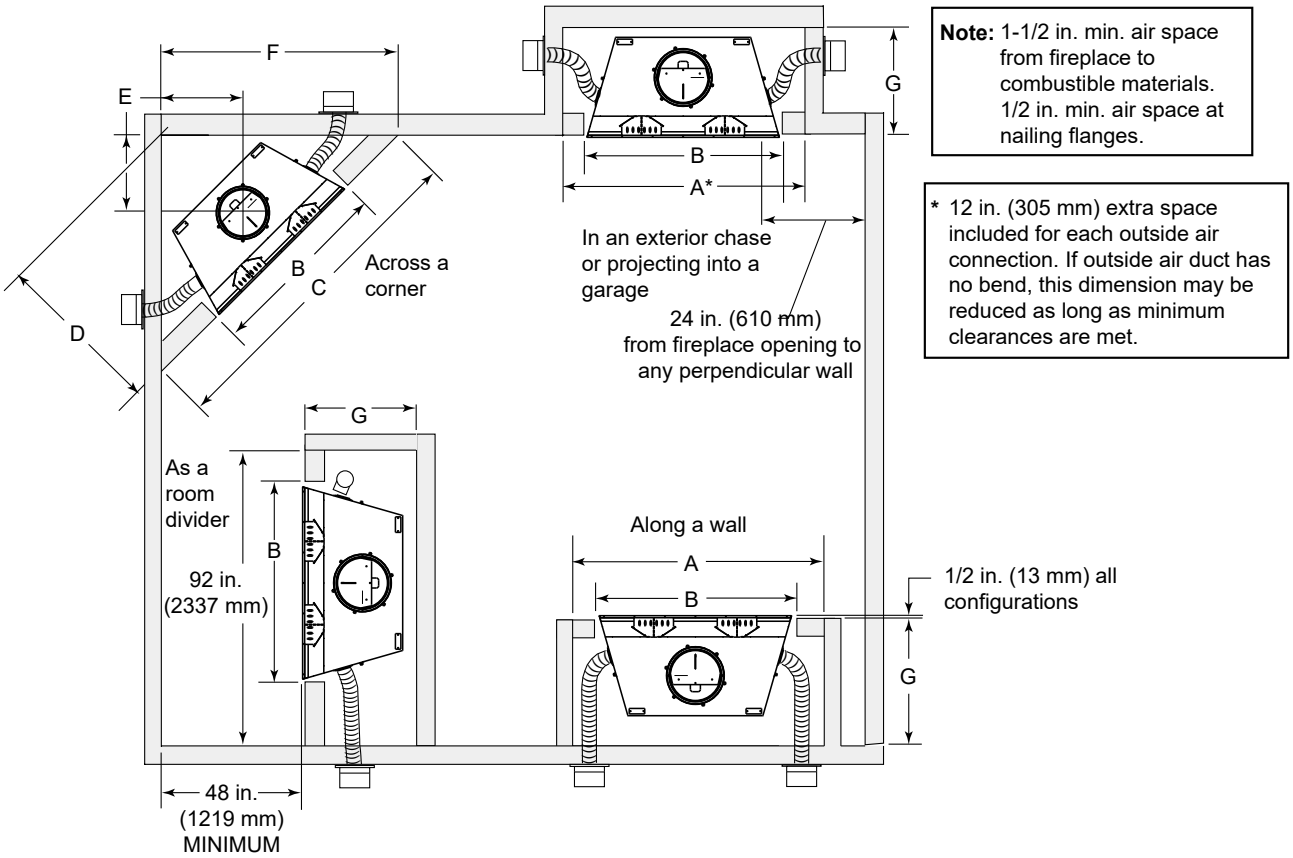

Model #		A	B	C	D	E	F	G
ODCASTLE-50	*in.*	85-7/8	61-7/8	103-1/4	51-5/8	25-1/4	73	28-1/2
	mm	2181	1572	2623	1311	641	1854	724

Figure 2.2 Fireplace Locations

2. Locating Fireplace & Chimney

Location of the fireplace and chimney will affect performance.

- Install within the warm airspace enclosed by the building envelope. This helps to produce more draft, especially during lighting and die-down of the fire.
- Installing the fireplace in a basement is not recommended.
- Penetrate the highest part of the roof. This minimizes the effects of wind loading.
- Locate termination cap away from trees, adjacent structures, uneven roof lines and other obstructions.
- Minimize the use of chimney offsets.
- Consider the fireplace location relative to floor and ceiling and attic joists.
- Take into consideration the termination requirements in Section 4.
- Install the outside air kit with the intake facing prevailing winds during the heating season.
- Ensure adequate outdoor air for <u>all</u> combustion appliances and exhaust equipment.
- Ensure furnace and air conditioning return vents are not located in the immediate vicinity of the fireplace.
- Avoid installing the fireplace near doors, walkways or small isolated spaces.
- Recessed lighting should be a “sealed can” design.
- Attic hatches weather stripped or sealed.
- Attic mounted duct work and air handler joints and seams taped or sealed.

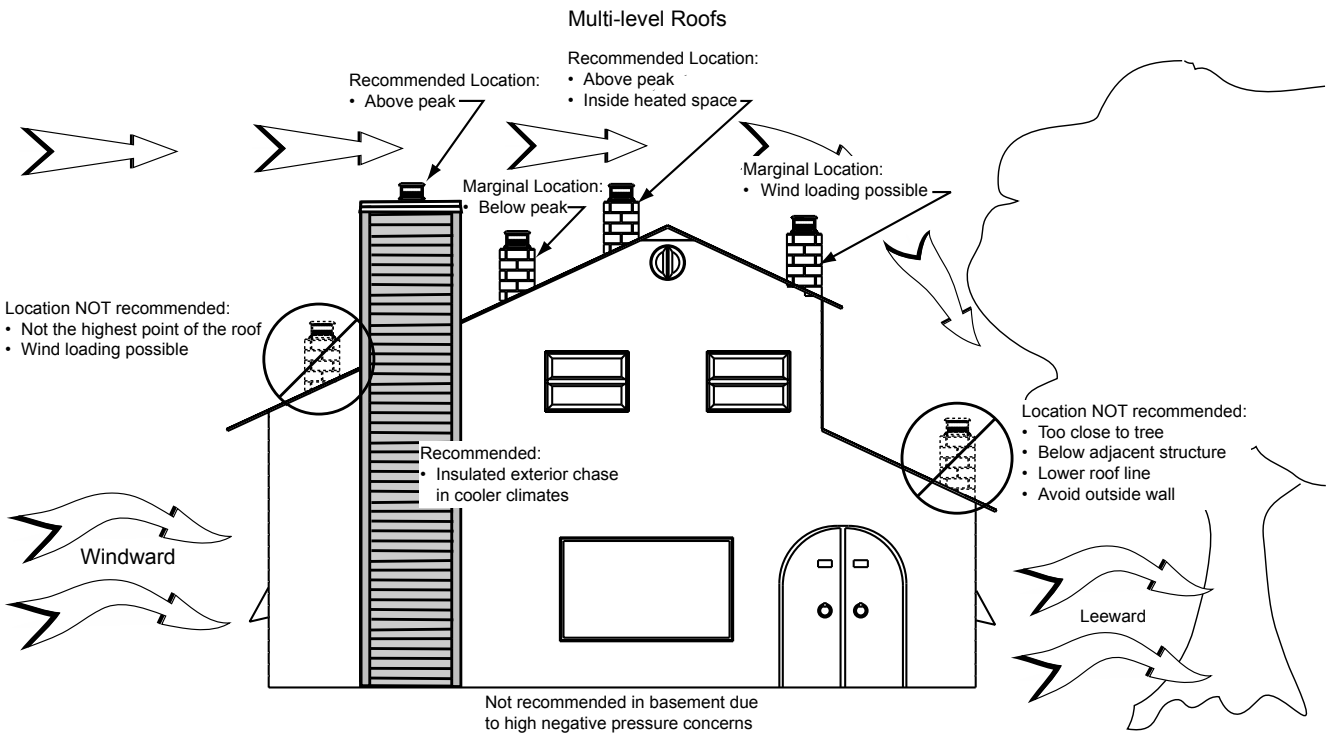

Figure 2.3 Recommended Chimney Locations

C. Tools and Supplies Needed

Before beginning the installation be sure the following tools and building supplies are available:

Reciprocating saw	Framing material
Pliers	Non-combustible sealant
Hammer	Gloves
Phillips screwdriver	Framing square
Flat blade screwdriver	Electric drill and bits
Plumb line	Safety glasses
Level	Tape measure

1/2-3/4 in. length, #6 or #8 self-drilling screws

Misc. screws and nails

D. Inspect Fireplace and Components

WARNING! Risk of Fire and/or Explosion! *Damaged parts could impair safe operation.* ***DO NOT*** *install damaged, incomplete or substitute components. Keep fireplace dry.*

- Remove fireplace and components from packaging and inspect for damage.
- Vent system components and doors are shipped in separate packages.
- Report to your dealer any parts damaged in shipment.
- **Read all the instructions before starting the installation. Follow these instructions carefully during the installation to ensure maximum safety and benefit.**

E. Fireplace System Requirements

Fireplace system requirements consist of the following:

- Fireplace
  - Refractory (required, sold separately)
    - WDR3850-T-NG Refr. Trad. Natural Gray
    - WDR3850-T-AV Refr. Trad. Antler Velvet
    - WDR3850-T-BK Refr. Trad. Black Onyx
    - WDR3850-T-BR Refr. Trad. Masonry Brown
    - WDR3850-H-NG Refr. Herr. Natural Gray
    - WDR3850-H-AV Refr. Herr. Antler Velvet
    - WDR3850-H-BK Refr. Herr. Black Onyx
    - WDR3850-H-BR Refr. Herr. Masonry Brown
  - Firescreen (included with fireplace)
  - Hearth Extension (required, sold separately)
  - Grate (included with fireplace)
- Outside Air System
  - Air Inlet Hood x2 (included with fireplace)
  - Flex (required, sold separately
- Chimney System
  - Attic insulation shield (sold separately)
  - Chimney termination cap (required, sold separately)
- Non-combustible finish material
- Drainage Pan (required on wood surfaces, sold separately)

3 Framing and Clearances

A. Appliance Dimensions/Weight

Appliance Weight Table

Model	Pounds
ODCASTLEWD-50	385

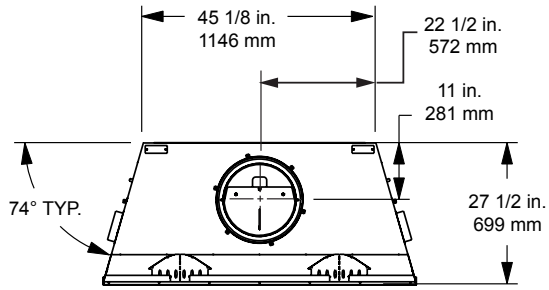

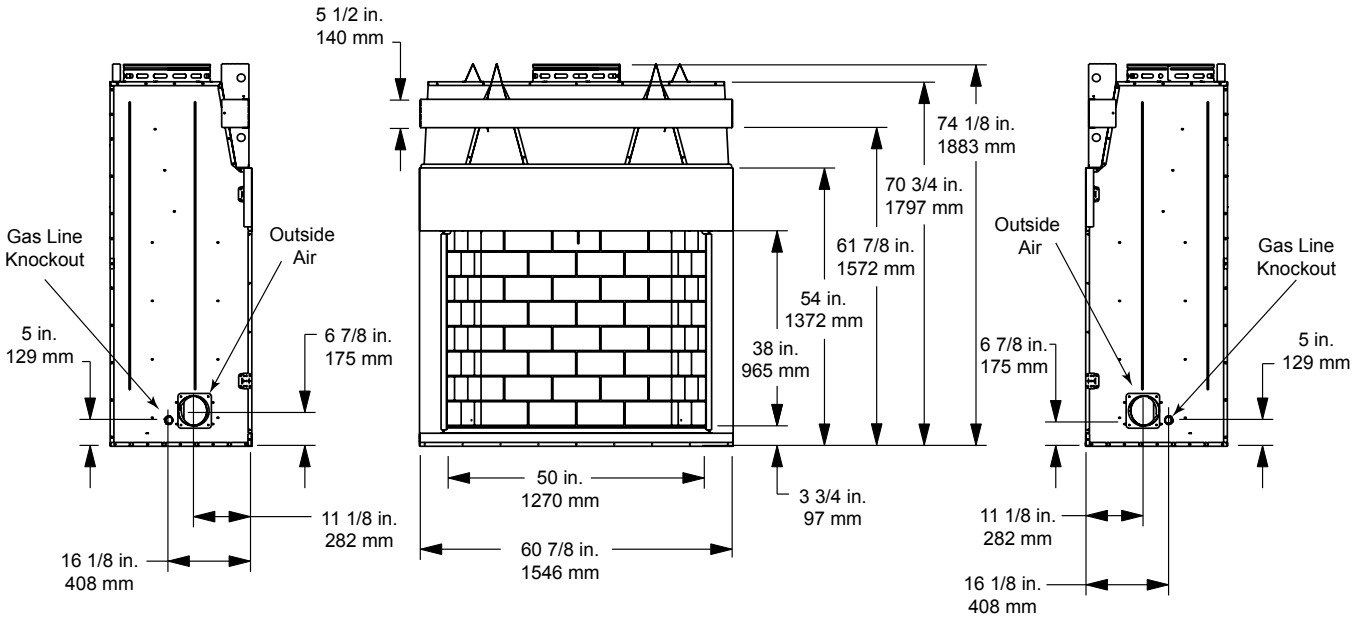

Figure 3.1 Appliance Dimensions

B. Clearances

WARNING! Risk of Fire!

You must comply with all minimum air space clearances to combustibles as specified in Figure 3.2. ***DO NOT*** *pack required air spaces with insulation or other materials. Framing or finishing material used on the front of, or in front of, the fireplace closer than the minimums listed must be constructed entirely of non-combustible materials (i.e., steel studs, concrete board, etc.). Failure to comply may cause fire.*

Minimum Clearances to Combustibles

WITHIN ENCLOSURE AREA	
Fireplace to backwall	1-1/2 in. (38 mm)
Fireplace to sidewall	1-1/2 in. (38 mm)
Top standoffs to header	0 in. (0 mm)
Door opening to sidewall	24 in. (610 mm)
MANTEL	
Mantel minimum height	63-3/4 in. (1619 mm)
Maximum mantel depth	12 in. (305 mm)

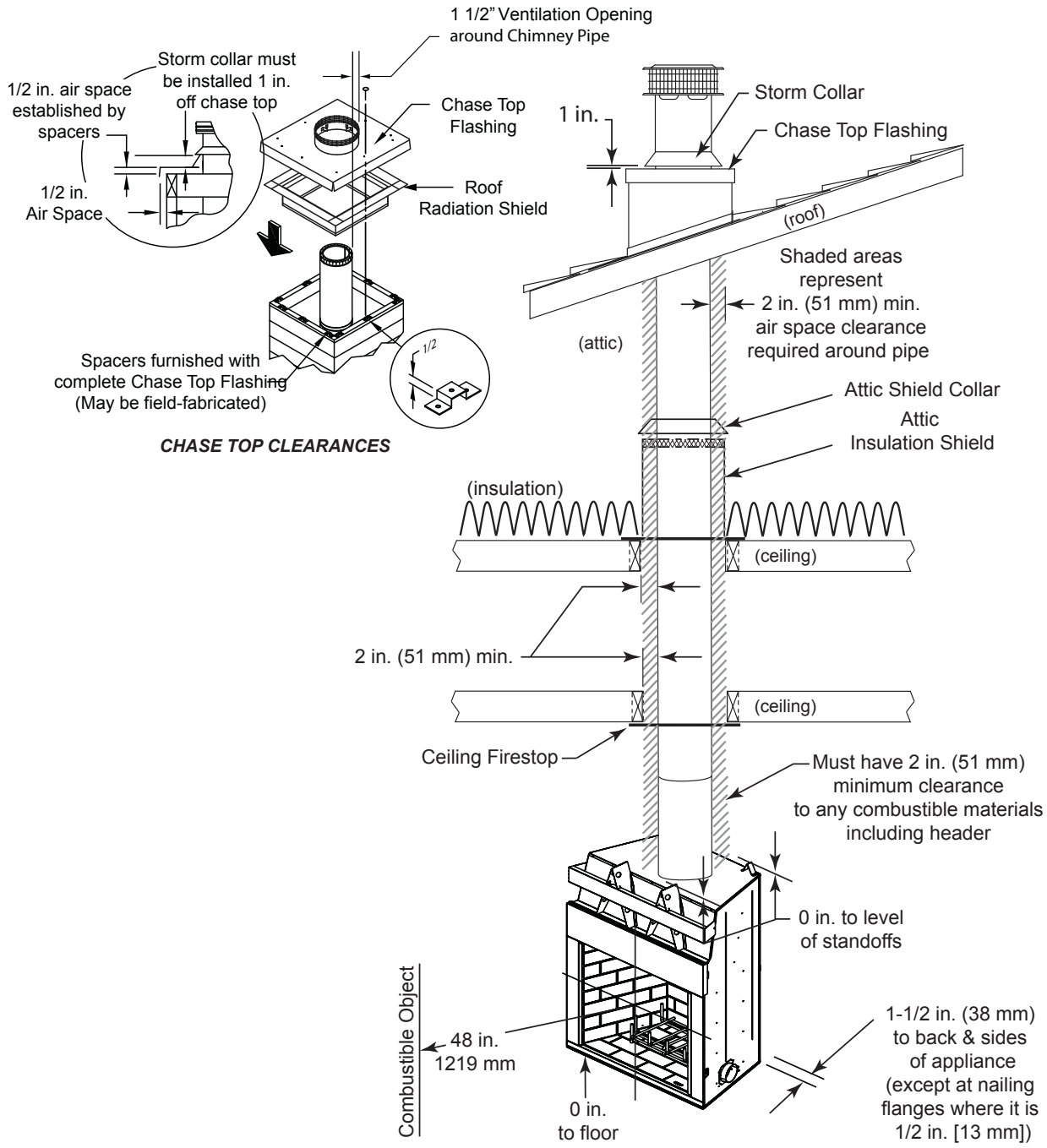

Figure 3.2 Clearances to Combustible Materials

C. Construct the Chase

A chase is a vertical boxlike structure built to enclose the fireplace and/or its vent system. Vertical chimneys that run on the outside of a building must be installed inside a chase.

In cold climates, Hearth & Home Technologies recommends that the chase be well insulated using batt type insulation between the joists.

Construction of the chase may vary with the type of building. These instructions are not substitutes for the requirements of local building codes. Local building codes MUST be checked.

Chases should be constructed in the manner of all outside walls of the home to prevent cold air drafting problems. The chase should not break the outside building envelope in any manner. All outer walls need to be insulated.

Building codes require false ceiling and ceiling firestops/attic shields at each floor of the chase or every 10 ft (3048 mm) of clear space to control spread of fire.

Walls, ceiling, base plate and cantilever floor at the first level of the chase should be insulated (see Figure 3.3.) Vapor and air infiltration barriers should be installed in the chase as per regional codes for the rest of the home. Additionally, Hearth & Home Technologies recommends that the inside surfaces be drywalled and taped (or the use of an equivalent method) for maximum air tightness.

Holes and other openings should be caulked with high temperature caulk or stuffed with unfaced fiber glass insulation.

WARNING! You must install false ceilings and ceiling firestops at each floor of the chase or every 10 ft (3.05 m) to control spread of fire.

WARNING! Risk of Fire! DO NOT *seal area between fire stop opening and chimney pipe except where they enter the attic or leave the warm air envelope of the home (use 600° F sealant).*

- The chase is constructed using framing materials much the same as the walls in your home. A variety of siding materials may be used including brick, stone, veneer brick, or standard siding materials.
- In constructing the chase, several factors must be considered:
  - Maintain a 2 in. (51 mm) air space around the chimney.
  - The chase top must be constructed of non-combustible material.
  - In cold climates, a firestop spacer and attic insulation shield should be installed in an insulated false ceiling at the 8 ft. (2438 mm) level above the fireplace assembly. This reduces heat loss through the chase.
  - In cold climates, the walls of the chase should be insulated to the level of the false ceiling as shown in Figure 3.3. This will help reduce heat loss from the home around the fireplace.

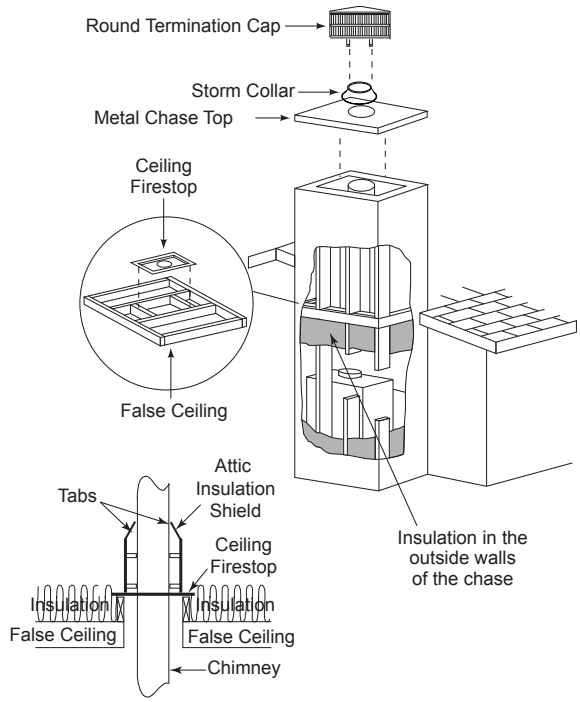

Figure 3.3 Chase Assembly

WARNING! Risk of Fire! You must maintain a minimum 2 in. (51 mm) air space clearance to insulation and other materials surrounding the chimney system.

- *Insulation and other materials must be firmly secured to prevent accidental contact with chimney system.*
- *The chase must be properly blocked to prevent blown insulation or other combustibles from entering and making contact with fireplace or chimney.*
- *Failure to prevent contact between insulation or other materials and chimney system may cause overheating and fire.*

Three examples of chase applications are shown in Figure 3.4.

1. Fireplace and chimney enclosed in an exterior chase.
2. Chimney offset through exterior wall and enclosed in chase.
3. Chase constructed on roof.

All outside walls should be insulated.

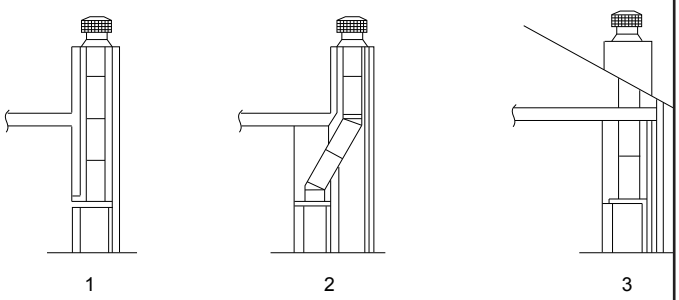

Figure 3.4 Chase Constructions

D. Frame the Fireplace

NOTICE: Hearth extension design must be determined before installation of fireplace.

If the fireplace is placed on the floor, the maximum height of a finished raised hearth is 3-3/4", if you want a higher raised hearth the fireplace must be placed on a platform.

Figure 3.5 shows a typical framing (using 2 x 4 lumber) of the fireplace, assuming combustible materials are used. All required clearances to combustibles around the fireplace must be adhered to. See Figure 3.2. Any framing across the top of the fireplace must be above the level of the top standoffs. (No recess above standoffs.)

The finished cavity depth must be no less than 28-1/2 in. (724 mm) from the finished backwall to the outside of front wall framing. Framing must extend straight up all the way to the ceiling.

Note: Before framing up the chase, consider where and how the chimney will run. If there are obstacles that might be in the way, it may be necessary to make the chase larger than shown to allow offsets to be used. Refer to offset chart on page 18.

WARNING! Risk of Fire! *Comply with all minimum clearances specified.*

- ***A minimum 1-1/2 in. (38 mm) air clearance must be maintained at the back and sides of the fireplace assembly.***
- *Chimney sections at any level require a 2 in. (51 mm) minimum air space clearance between the framing and chimney section.*

WARNING! Risk of Fire! *You must comply with all minimum air space clearances to combustibles.* ***DO NOT*** *pack required air spaces with insulation or other materials.*

CAUTION! *Risk of Cuts/Abrasions. Wear protective gloves and safety glasses during installation. Sheet metal edges are sharp.*

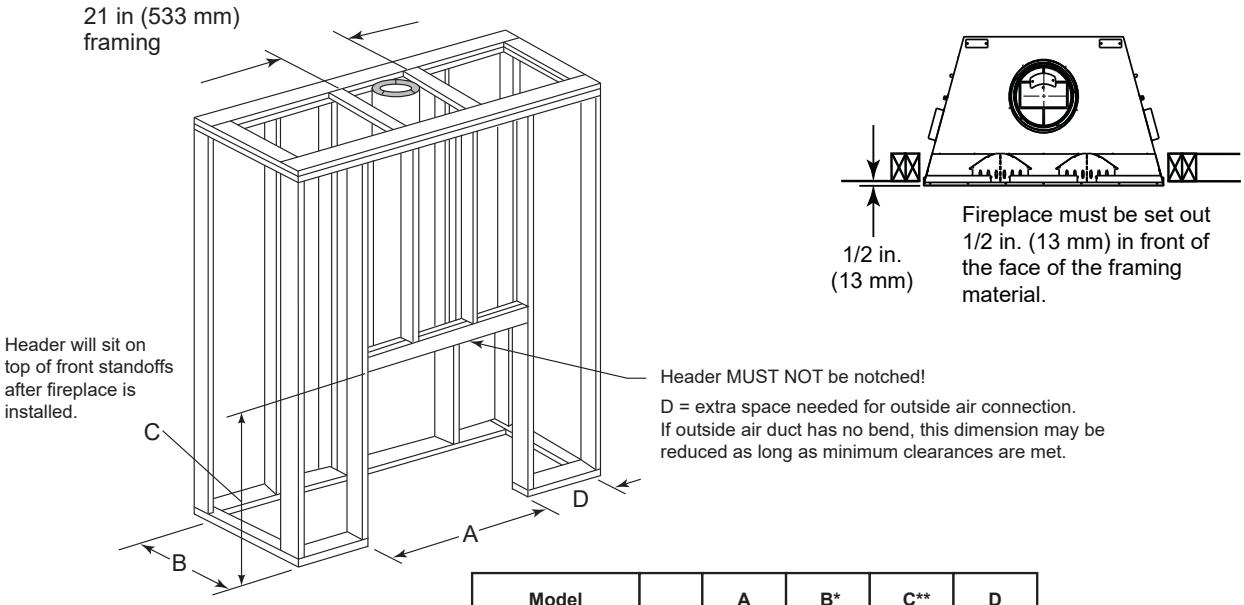

Model		A	B*	C**	D
ODCASTLEWD-50	in.	61-7/8	28-1/2	74-1/2	12
	mm	1572	724	1892	305

* If interior of chase will be drywalled, add the thickness to this measurement.
** Rough opening dimension to be able to get fireplace installed.

Figure 3.5 Framing the Fireplace

Note:

- Illustrations and photos reflect typical installations and are FOR DESIGN PURPOSES ONLY.
- Illustrations/diagrams are not drawn to scale.
- Actual installation/appearance may vary due to individual design preference.
- Hearth & Home Technologies reserves the right to alter its products.

- **Freestanding Installations (see Figure 3.14 and 3.15)**
  When installing this fireplace as a freestanding fireplace in your yard, it must be enclosed to prevent impact damage to the fireplace. Freestanding applications allow for a reduction in the minimum vent run. Non-combustible framing and an extended smoke shield are required. See Table 3.1 and Figure 3.14.
- **Porch and Patio Installations**
  The fireplace will not perform as an exterior wall. Hearth & Home Technologies recommends that the fireplace chase be constructed outside the structure's weather envelope. Where the platform meets the wall, use a flashing detail similar to that required for attached decks. Chase platforms, including heaths should slope away from the structure at 1/8 in. to 1/4 in. per foot. The fireplace can be shimmed level.

When Installed on Surfaces Where Water May Collect or Cause Damage:

Hearth & Home Technologies recommends that a drainage pan be placed under the unit (sold separately). This can be constructed of metal, adhesive polymer membrane (such as ice and water shield) or other suitable materials. A means of drainage out of the pan such as tubes or weep holes should be provided. A slope of 1/8 in. to 1/4 in. per foot towards the drain port is suggested. The fireplace can be shimmed level. Hearths should slope away from the front of the fireplace and chase at 1/8 in. to 1/4 in. per foot. Spark strips must be used on top of any combustible hearth materials used for moisture management.

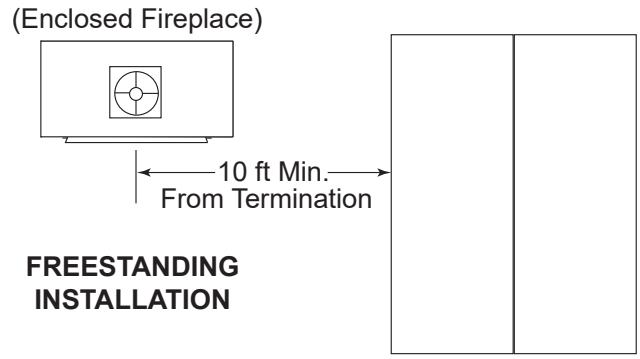

Figure 3.15 Freestanding Fireplace Location

Table 3.1 Reduced Chimney Requirements

Non-combustible enclosure minimum straight height	*10 ft*	*3.05 m*
Non-combustible enclosure minimum straight height with single offset/return	*10 ft.*	*3.05 m*
If vent run is less than 18 ft. an extended smoke shield needs purchased and used.	*ODCASTLE-FSK50*	

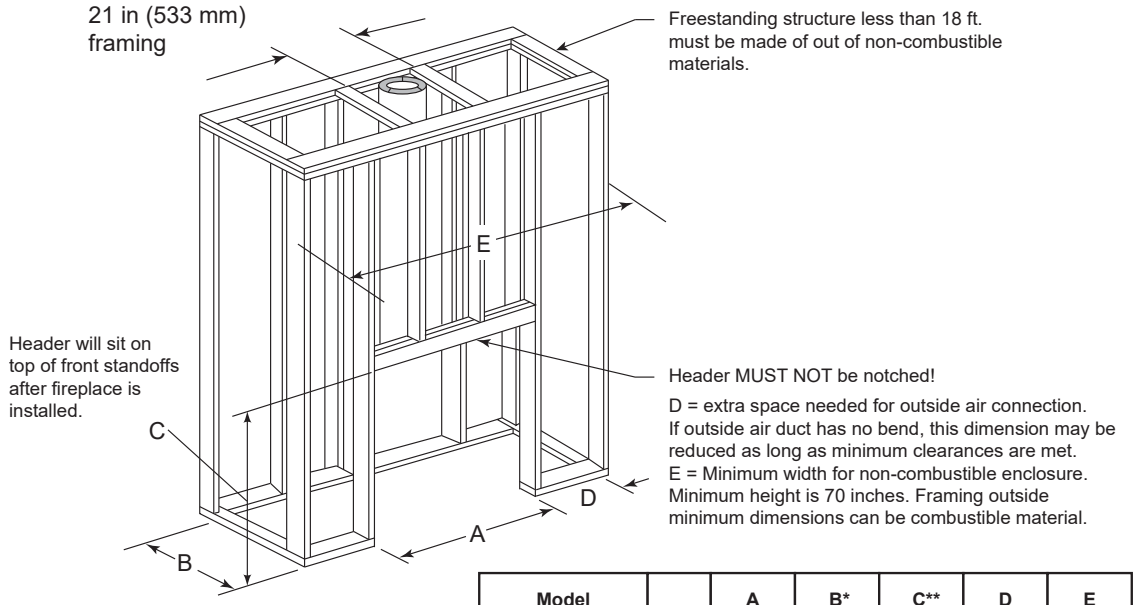

Model		A	B*	C**	D	E
ODCASTLEWD-50	in.	61-7/8	28-1/2	74-1/2	12	85-7/8
	mm	1572	724	1892	305	2181

* If interior of chase will be drywalled, add the thickness to this measurement.
** Rough opening dimension to be able to get fireplace installed.

Figure 3.14 Freestanding Framing

E. Secure and Level the Fireplace

This fireplace may be placed on either a combustible or noncombustible continuous flat surface. Slide the fireplace into position. Be sure to provide the minimum 1-1/2 in. air clearance at the sides and back of the fireplace.

The fireplace should be positioned so the face of the non-combustible material on the fireplace will be flush with the face of the drywall on the walls.

Level the fireplace and shim as necessary.

WARNING! Risk of Fire! *Prevent contact with sagging, loose insulation.*

- ***DO NOT*** *install against vapor barriers or exposed insulation.*
- *Secure insulation and vapor barriers.*
- *Provide minimum air space clearances at the sides and back of the fireplace assembly.*

F. Protective Metal Hearth Strips

WARNING! Risk of Fire! *Protective metal hearth strips MUST be installed on combustible surfaces.* ***DO NOT*** *cover metal strips with combustible materials. Sparks or embers may ignite flooring.*

WARNING! Risk of fire! *High temperatures, sparks, embers or other burning material falling from the fireplace may ignite flooring or concealed combustible surfaces.*

- *Protective metal hearth strips MUST be installed.*
- *Hearth extensions MUST be installed exactly as specified.*

- Locate the three protective metal hearth strips measuring approximately 26 in. x 4 in. (660 mm x 102 mm) included with this fireplace.
- Slide each metal strip 2 in. (51 mm) under front edge of fireplace.
- Overlap strips in the middle of fireplace opening by 1 in. (25 mm) minimum.
- Metal strips must extend beyond the front and sides of the fireplace opening by at least 2 in. (51 mm), Figure 3.6).
- Protect the front of a platform elevated above the hearth extension with metal strips (not included with fireplace) per Figure 3.7. See Section 6 for hearth extension instructions.

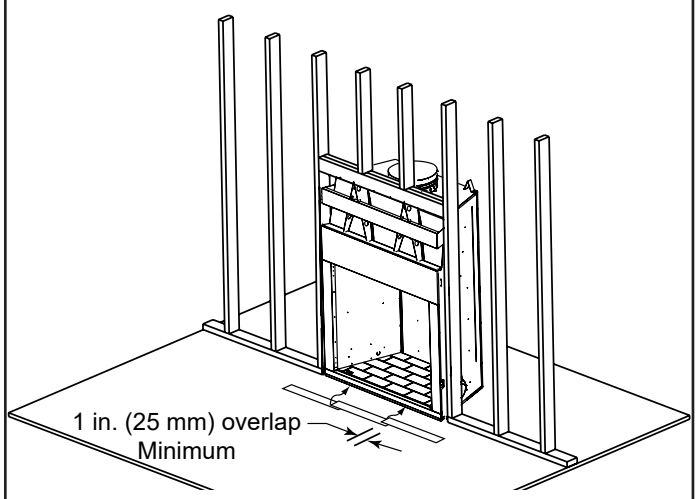

Metal strips are placed 2 in. (51 mm) under the front of the fireplace and must extend beyond the front and sides of fireplace opening by 2 in. (51 mm).

Figure 3.6 Position the Protective Metal Hearth Strips

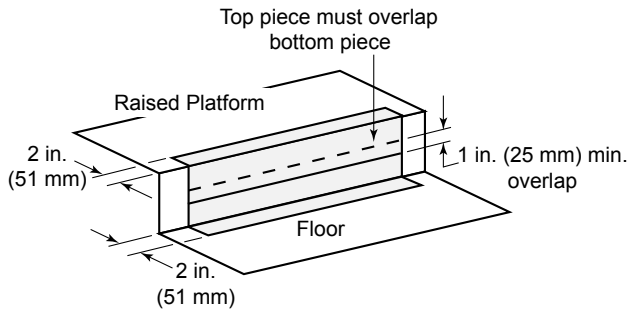

Figure 3.7 Protect the Front of an Elevated Platform

G. Outside Air Kit (Required on both sides)

Outside air kits must be used for combustion and to provide cooling air to prevent overheating. Hearth & Home Technologies recommends you utilize the shortest duct run to optimize the performance of the outside air kit and install a P-Trap (see Figure 3.10). The outside air inlet hoods should be positioned in a manner that will not allow snow, leaves, etc. to block the inlet. In some installations the air duct may need to be run vertically. In such an installation, a 3 ft (914 mm) height difference must be maintained from the top of the uppermost chimney section to the outside air inlet hoods.

Note: Maximum length is 40 feet.

WARNING! Risk of Fire! *The outside air kits are installed on the both sides of the fireplace to prevent overheating and fire.*

Refer to Figures 3.8 and 3.9 when placing the outside air inlets.

- Cut a 6-1/2in. (165 mm) hole in outside wall to accommodate air piping.
- Use 6 in. (152 mm) flex (not supplied) to directly connect outside air to fireplace intake. Insulate the pipe to prevent frost condensation.
- Use the supplied outside air inlet hoods.
- Seal between the wall and the pipe with silicone to prevent moisture penetration and air leaks.
- Seal between the outside air inlet hoods and the house with silicone to prevent air infiltration.

CAUTION! Risk of Fire or Asphyxiation! DO NOT *draw outside combustion air from wall, floor or ceiling cavity, or enclosed spaces such as an attic or garage.*

- ***DO NOT*** *place outside air inlet hood close to exhaust vents or chimneys. Fumes or odor could be drawn into the room through the fireplace.*
- *Locate outside air inlet hood to prevent blockage from leaves, snow/ice, or other debris. Blockages could cause combustion air starvation and unit overheat.*

NOTICE: *The fireplace provides some outside air for combustion. Other methods may be necessary if more air is required.*

CAUTION! Risk of Cuts/Abrasions. *Wear protective gloves and safety glasses during installation. Sheet metal edges are sharp.*

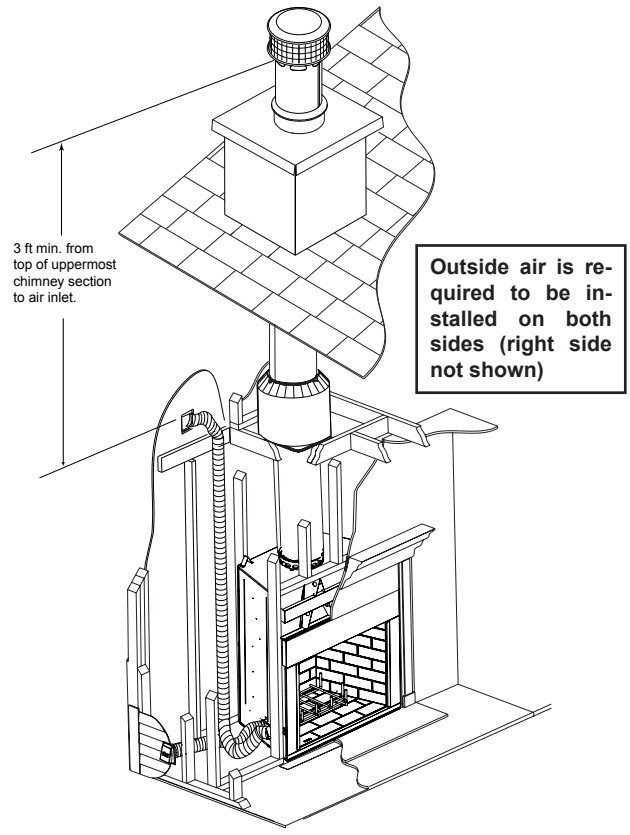

Figure 3.8 Outside Air Inlet Locations

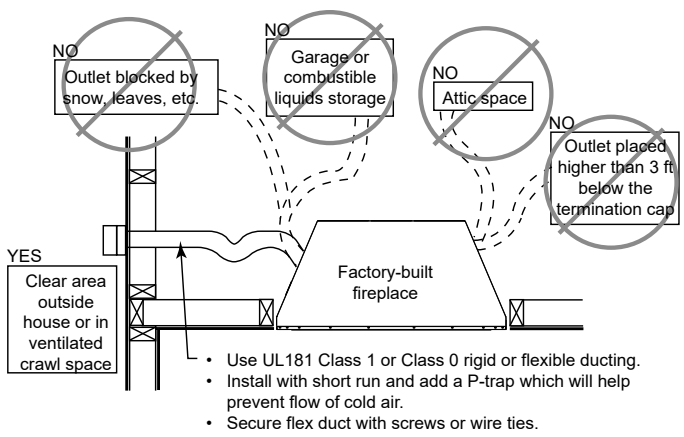

Figure 3.8 Outside Air Installation

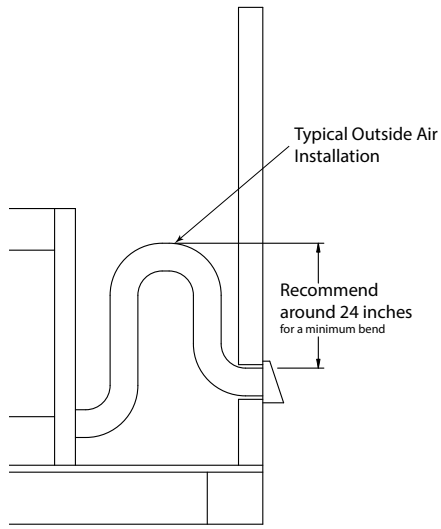

Figure 3.10 P-Trap

4 Chimney and Termination Installation

NOTICE: *Chimney performance may vary.*

- *Trees, buildings, roof lines and wind conditions affect performance.*
- *Chimney height may need adjustment if smoking or overdraft occurs.*

A. Chimney Requirements

Measure vertical distances from the base of the fireplace.

	Feet	Meters
• Minimum overall straight height	18	5.49
• Minimum height with offset/return	18.5	5.64
• Maximum height	50	15.24
• Maximum chimney length between an offset and return	20	6.10
• Maximum distance between chimney stabilizers	25	7.62
• Maximum unsupported chimney length between the offset and return	6	1.83
• Maximum unsupported chimney height above the fireplace	25	7.62
• Maximum unsupported chimney above roof	6	1.83
• Minimum height with double offset/return	22.5	6.86

WARNING! Risk of Fire! You must maintain 2 in. (51 mm) air space clearance to insulation and other combustible materials around the chimney system. Failure to do so may cause overheating and fire.

Table 4.1

Height of Chimney Components		in.	mm
Stabilizer			
	14DCA-ST		
Firestop			
	14DCA-FS		
Elbows			
	14DCA-E15 - 15° Elbow		
	14DCA-E30 - 30° Elbow		
Miscellaneous			
	14DCA-ES - Elbow Strap		
	14DCA-SS - Supplementary Support		
	14DCA-IS - Insulation Shield		
	14DCA-RRS - Roof Radiation Shield		
	14DCA-CTF - Chase Top Flashing		
	14DCA-CTC - Chase Top Collar		
	14DCA-VC1 - Chimney Cap		
	14DCA-SC - Storm Collar		
	14DCA-WS - Wall Strap		
Chimney Sections*			
	14DCA-12	10 1/2	267
	14DCA-18	16 1/2	419
	14DCA-36	34 1/2	876
	14DCA-48	46 1/2	1181

* Dimensions reflect effective height.

Determine the chimney components needed to complete your particular installation:

- Measure the total vertical height of the fireplace installation from the base of the fireplace assembly to the approximate location of the bottom of the termination cap.
- Subtract the effective height of the fireplace assembly (see Figure 4.1) from the total vertical height to determine the overall height of the chimney installation.
- Create a schematic for your application similar to Figure 4.1 showing components required (referring to Table 4.1).
- Install a ceiling firestop whenever the chimney penetrates a floor/ceiling.

NOTICE: *A maximum of two offset and return may be used.*

CAUTION! Risk of Fire and/or Asphyxiation! DO NOT *connect this fireplace to a chimney flue servicing another appliance. Do NOT connect to any air distribution duct or system. These actions could cause overheating/fire in the chimney flue, or release of exhaust fumes into the living areas.*

NOTE: This appliance must be run through a chase only. See following instructions on chase installations.

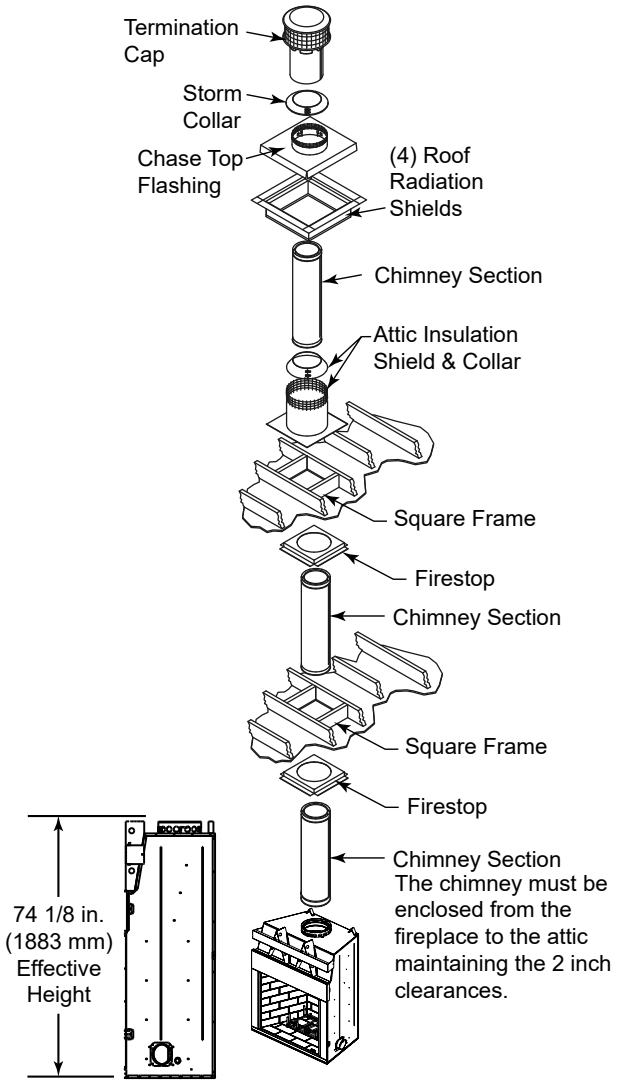

Figure 4.1

A MAJOR CAUSE OF VENT RELATED FIRES IS FAILURE TO MAINTAIN REQUIRED CLEARANCES (AIR SPACES) TO COMBUSTIBLE MATERIALS. IT IS OF THE UTMOST IMPORTANCE THAT DURACHIMNEY II BE INSTALLED ONLY IN ACCORDANCE WITH THESE INSTRUCTIONS.

B. Clearances

Always allow at least a 2-inch clearance between Dura-Chimney II Pipe and any combustible materials.

- Never fill any required clearance space with insulation or any other materials.
- Combustible materials include lumber, plywood, sheetrock, plaster and lath, furniture, curtains, electrical wiring, and building insulation.

C. Installation Notes

Proper planning for your DuraChimney II installation will result in greater safety, efficiency, and convenience, as well as saving time and money. You must use only authorized DuraChimney II parts to maintain a listed chimney system. Do **not** mix parts or try to match with other products or use improvised solutions.

- Do **not** install damaged or modified parts.
- Practice good workmanship. Sloppy work could jeopardize your chimney's safety.
- **Keep electrical wiring and building insulation away from all chimneys.**
- When deciding the location of your chimney, try to avoid modifications to roof beams and other structural components of the building.

If you have any questions, contact either your dealer or Simpson Dura-Vent directly.

D. Frame Openings

- From the ceiling, drop a plumb bob to the center of the fireplace's flue outlet and mark this center point on the ceiling.
- Mark appropriate cutting lines around the center point. Cut a square hole in the ceiling. Frame a level, square, 21 in. x 21 in. (533 mm x 533 mm) opening centered over the hole that you have cut.
- Frame openings at each floor level above the fireplace (Figure 4.1). These openings are to hold the firestop and attic insulation shield.
- Locate each opening by dropping a plumb bob to the four corners of the opening below.
- Maintain the minimum 2-inch clearance/air space. Maintain the minimum clearances and dimensions as specified in Table 4.1.

E. Cut Roof Opening

Determine and cut an opening in the roof directly above the opening below, and at least 4-inches larger than the chimney's outside diameter to provide at least a 2-inch clearance all around the chimney.

- The chimney **must** be centered within this opening and maintain the minimum 2-inch clearance to combustibles.

F. Install Firestop

A firestop is required on each floor penetration in multistory installation. Building Codes require a firestop at every floor/ceiling level, including where the chimney penetrates into the attic. Figure 4.1 shows a typical 2-story installation with an attic.

Note: a firestop is **not** installed where the chimney penetrates through the roof.

- The firestop is installed on the underside of the ceiling/floor framing (Figure 4.2).
- Use a minimum of one 8 penny nail or one 1-1/4" wood screw per corner.

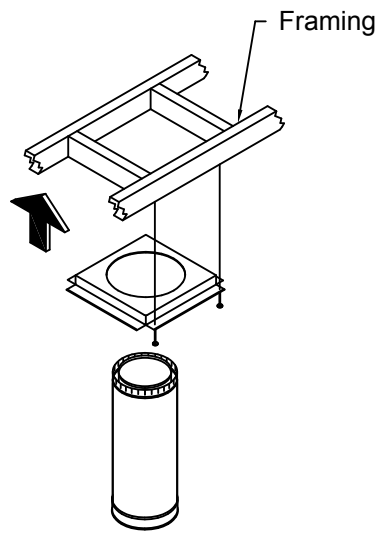

Figure 4.2

G. Assemble Chimney Sections

- Attach the first chimney section or offset onto the top of the fireplace (Figure 4.3). Sheet metal screws are required to connect chimney section to the fireplace starter collar. Continue to add additional sections of chimney as needed.
- Use a wall strap every eight feet of chimney height.
- For each additional chimney section use four of the sheet metal screws provided to make a secure connection between the chimney sections (Figure 4.4). Do not penetrate the inner liner of the chimney.

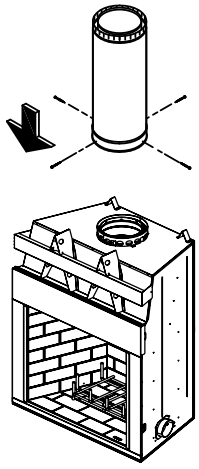

Figure 4.3

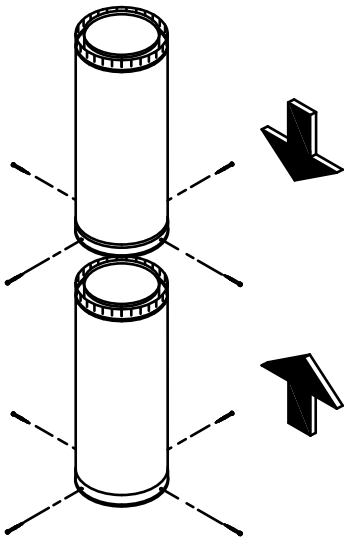

Figure 4.4

H. Using Offsets/Returns

- Use an offset/return to bypass overhead obstructions.
- An offset and return can be used as a single entity or separated by chimney section(s).

***WARNING! Risk of Fire! DO NOT** use offset/returns greater than 30 ft. Chimney draft will be restricted and could cause overheating and fire.*

- Measure the shift required to avoid the overhead obstruction (Offset, Figure 4.5).
- Find the appropriate offset dimension listed in Table 4.2.
- The rise (see Figure 4.5) coinciding with the offset dimension measurement in Table 4.2 represents the required vertical clearance needed to complete the offset/return.

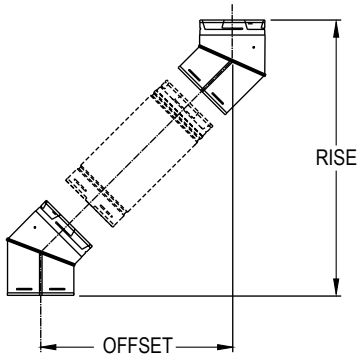

Figure 4.5

Table 8.2

Elbow Angle from Vertical	Chimney Length Between Elbows	Offset Inches	Rise Inches	*Offset Millimeters*	*Rise Millimeters*
15°	0	2 5/8	21 5/8	*67*	*549*
15°	12 in./*305 mm*	5 1/2	32 1/4	*140*	*819*
15°	18 in./*457 mm*	7 1/8	38	*181*	*965*
15°	36 in./*914 mm*	11 3/4	55 3/8	*298*	*1407*
15°	48 in./*1219 mm*	14 7/8	67	*378*	*1702*
30°	0	6 1/4	24 1/2	*159*	*622*
30°	12 in./*305 mm*	11 3/4	34	*298*	*864*
30°	18 in./*457 mm*	14 3/4	39 1/4	*375*	*997*
30°	36 in./*914 mm*	23 3/4	54 7/8	*603*	*1394*
30°	48 in./*1219 mm*	29 3/4	65 1/4	*756*	*1657*

I. Offset Elbow Installation

A 30° Elbow (measured from the vertical) is the largest that can be used in an offset. A 30° Elbow may not be combined with another Elbow to make a steeper offset (e.g. two 30° Elbows are not allowed to be put together to form a 60° elbow.). Avoid Elbows if possible. A totally vertical chimney is more efficient. When Elbows are necessary to avoid obstructions such as rafters, ridgepoles, or joists, you are only allowed to use 2 pair of Elbows in any one chimney system. Horizontal runs of chimney violate building code and are not allowed.

- Attach elbows
  Attach elbow to chimney section or other elbow by mating the male and female ends with each other and using four sheet metal screws provided. Attach one elbow to the chimney section below, and align it for the offset. Determine the required offset length and attach an appropriate length (or lengths) of chimney section(s) above the elbow. Attach the second elbow above the chimney section to complete the offset (Figure 4.6).
- Secure offset
  Use an elbow strap to secure the offset. Secure the elbow strap's band to chimney around the upper portion of the top elbow, then tighten the nut and bolt until the clamp is firm. Wrap the elbow strap end over an adjacent joist or rafter and secure it with at least two 8-penny nails or two #8, 1-1/2" screws. Add additional elbow straps for each section of chimney in the offset (Figure 4.7). Every chimney section in the offset must be supported. Do not add more chimney sections until the elbows and offset are supported. Be sure that the chimney remains vertical.

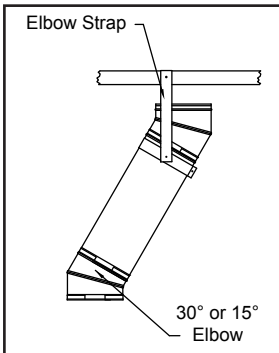

Figure 4.6

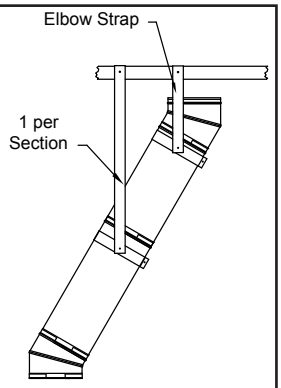

Figure 4.7

J. Supplementary Support & Stabilizer

Install a supplementary support if total chimney height is greater than 50-feet, or if the fireplace manufacturer requires it. If additional support is needed, install one or more supplementary supports which can each support 25-feet of chimney (Fig. 4.8).

- Clamp the supplementary support band around the pipe using the nut and bolt provided, and anchor the support to nearby building framing.
- Always maintain the 2" clearance to combustibles from the chimney pipe. A stabilizer is available and may be required by some fireplace manufacturers to keep the chimney vertical and help maintain clearances to combustibles within a chase.
- Clamp the stabilizer to the pipe using the nut and bolt provided, and secure legs to nearby framing using plumber's tape or guy-wires (Fig. 4.9).

Note: The stabilizer does not support the weight of the chimney, it is only used to keep chimney centered within a chase.

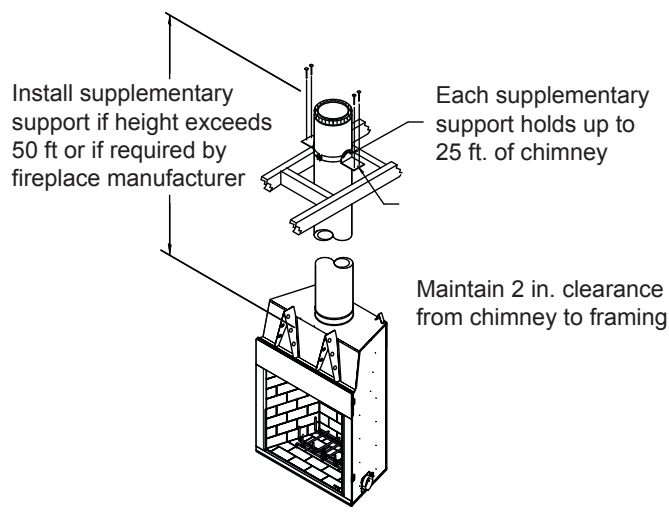

Figure 4.8

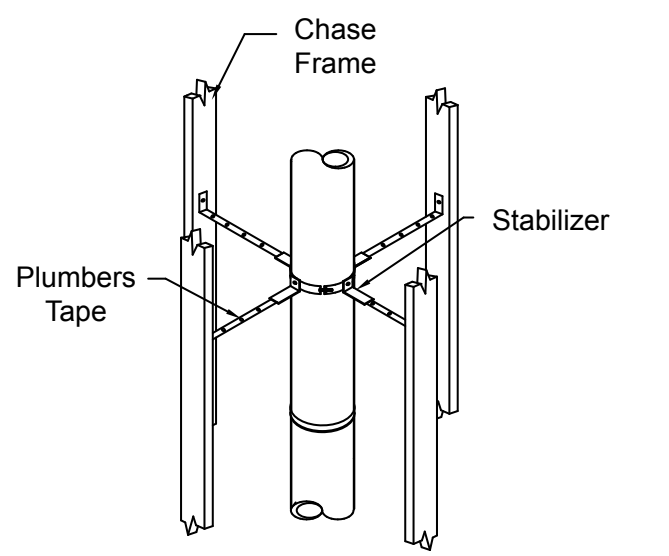

Figure 4.9

K. Install Attic Insulation Shield

The attic insulation shield must be installed where the chimney passes into an attic. Its purpose is to prevent debris and insulation from getting too close to the chimney. In attic areas where this shield cannot fit, or is not used you must enclose the attic portion of the chimney in a framed enclosure. If the chimney is fully enclosed through the attic, an attic insulation shield is not required. Install the attic insulation shield as follows:

- Remove any insulation from attic floor around the framed opening.
- Assemble chimney sections until at least 18 inches of chimney extends above the firestop.
- Slip the attic insulation shield over the chimney until the base sits squarely on the framed opening (Figure 4.10).
- Secure the attic insulation shield to the top of the framed opening using at least two 8-penny nails or two #8, 1-1/2 in. wood screws per side (Figure 4.11).
- Wrap the collar of the attic insulation shield around the chimney and fasten it loosely. Slide the collar down to meet the attic insulation shield. Tighten the bolts to secure the collar in place (Figure 4.11).
- Combustible material may come into contact with the attic insulation shield as long as the required clearances are maintained to the chimney pipe.

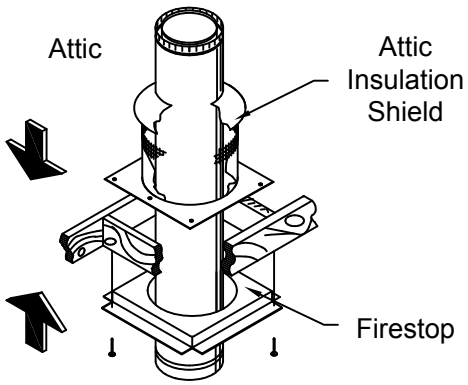

Figure 4.10

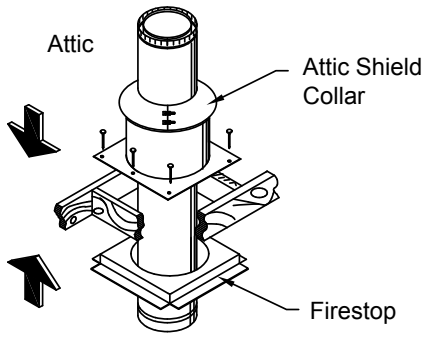

Figure 4.11

L. Install Roof Radiation Shields

Roof radiation shields must be used to provide protection for roof or chase framing members.

Note: Roof radiation shields do not allow for a reduced clearance to combustibles.

Clearance to combustibles must be a minimum of 2" away from the chimney pipe.

- Install roof radiation shields at either the top of the chase or where the chimney penetrates the roof, whichever is the top of the installation.
- Roof radiation shields are built with a 1/2" air gap standoff from the joist face (Figure 4.12). The corners of the roof radiation shields overlap each other to ensure proper position.
- Secure the roof radiation shields to the top of the framing members using screws or nails in the corners.
- If framing members are further away from the chimney than 2 in., center the roof radiation shield to the chimney on the framing member and secure in place with screws or nails.

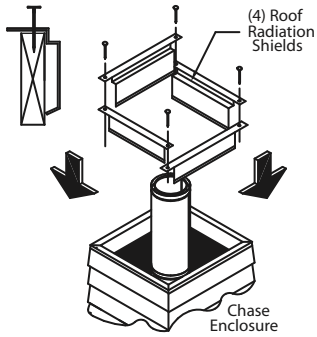

Figure 4.12

M. Attach Flashing

For chase enclosures, use the chase top flashing. The chase top flashing allows for a 1-1/2 in. clearance maintained from the chimney (Figure 4.14) and provides required ventilation air.

- Chase top flashings (includes chase top collars and spacing clips) are available from your HHT dealer.
- Additional non-combustible structural supports can be field-fabricated to help support the chase top flashing if needed, provided the air ventilation requirements are maintained. See Figure 4.15.
- If the chase top flashing (40 in. x 40 in.) does not ensure the minimum 1/2 in. spacing and perimeter ventilation requirements as shown in Figure 4.13., use a chase top collar and field-construct the flashing as needed for the chase dimensions. Skip to ***Field-Constructed Chase Top Flashing***.

- Install the chase top flashing at the top of the chase with a 1/2 in. minimum air clearance off the top of the chase construction (Figure 4.13).
- Spacing clips can be field-fabricated as needed out of 24 GA sheet metal or other suitable non-combustible material (refer to Figure 4.13)
- Insect-guard screening may be added between the chase and chase top flashing.
- Secure the chase top flashing to the chase with at least three screws or nails per side.
- When installed, the bottom of the chimney cap must be at least 6 in. above the chase top flashing.

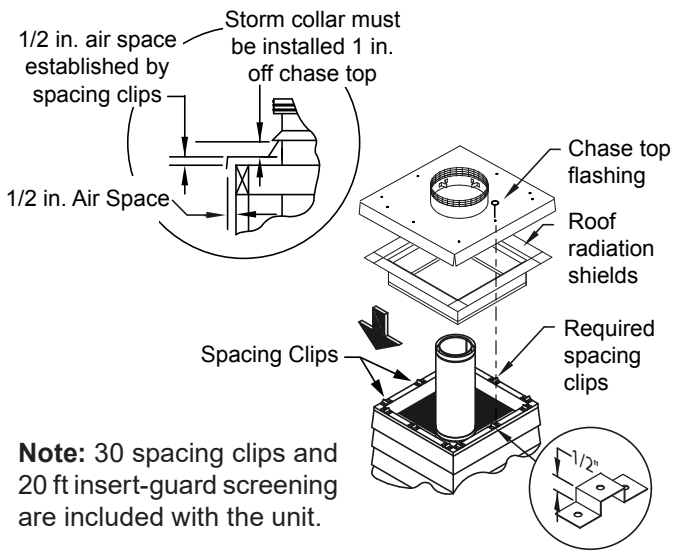

Note: 30 spacing clips and 20 ft insert-guard screening are included with the unit.

Figure 4.13

Field-Constructed Chase Top Flashing

- Field-constructed flashing must be constructed of 24 GA minimum sheet metal or other suitable non-combustible materials.
- The flashing must be oversized to allow 1/2 in. air gap around all four sides.
- Include a minimum 1 in. turn down and a 1/2 in. drip edge (optional) to prevent water from seeping into the chase. Refer to Figure 4.16.
- Additional non-combustible structural supports can be field-fabricated to help support the chase top flashing if needed, provided the air ventilation requirements are maintained. See Figure 4.15.
- Spacing clips can be field-fabricated as needed out of 24 GA sheet metal or other suitable non-combustible material (refer to Figure 4.13), or purchased from Hearth & Home Technologies.
- Secure the chase top collar section to the field-fabricated flashing with sheet metal screws or rivets (Figure 4.15).
- Seal chase top collar section to flashing with non-hardening waterproof sealant to ensure a weather tight connection. See Figure 4.15.
- Insect-guard screening may be added between the chase and flashing.
- Secure the chase top flashing to the chase with at least three screws or nails per side.
- When installed, the bottom of the chimney cap must be at least 6 in. above the flashing (Figure 4.16).

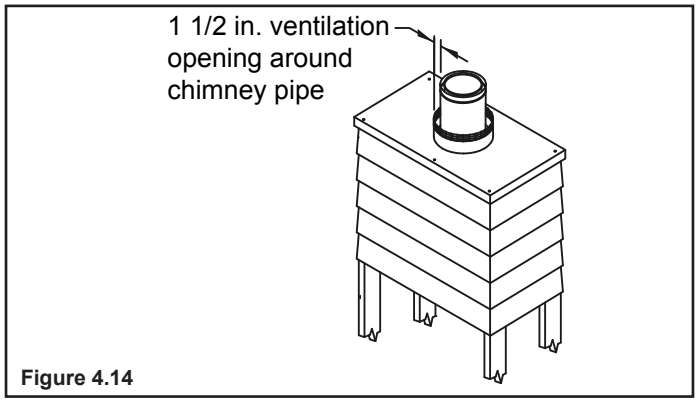

Figure 4.14

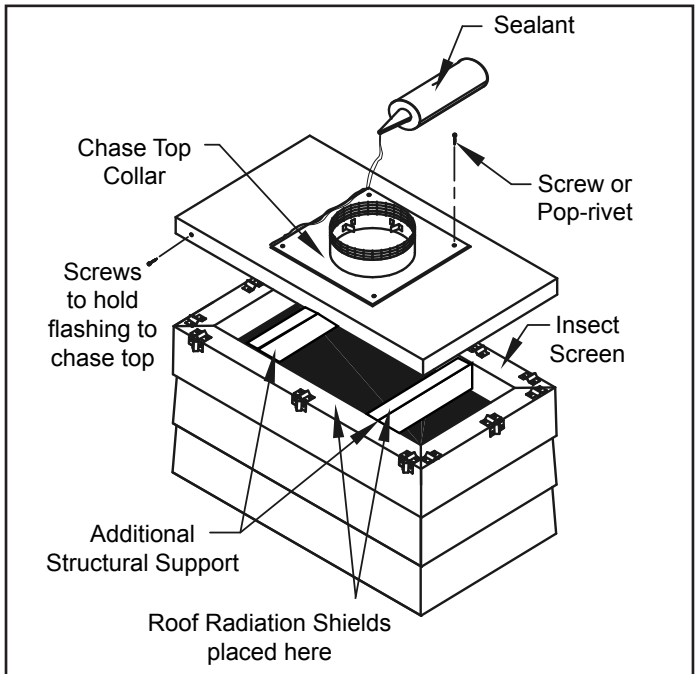

Figure 4.15

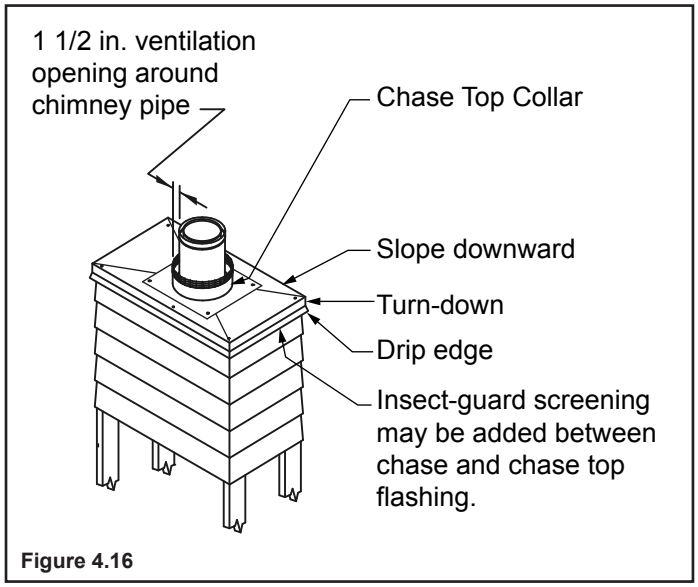

Figure 4.16

N. Finish Top

- Slide the storm collar down over the chimney to the top of the flashing. The storm collar must be installed 1 in. off the chase top flashing to provide proper ventilation (Figure 4.17).
- Tighten the bolts of the storm collar and seal the storm collar against the chimney with sealant. Be sure chimney and offsets are properly supported.
- Apply a non-hardening waterproof sealant around the chimney at the point where the storm collar will meet the chimney just above the flashing (Figure 4.17).
- Attach the chimney cap onto the top of the chimney by setting the female end of the cap onto the male end of the last chimney section. Secure the cap by using four sheet metal screws (provided, Figure 4.18.)
- Do not push down from the top portion of the cap as this may damage the cap. Push from the lower section of the cap if needed.
- The chimney cap top can be removed for chimney cleaning.

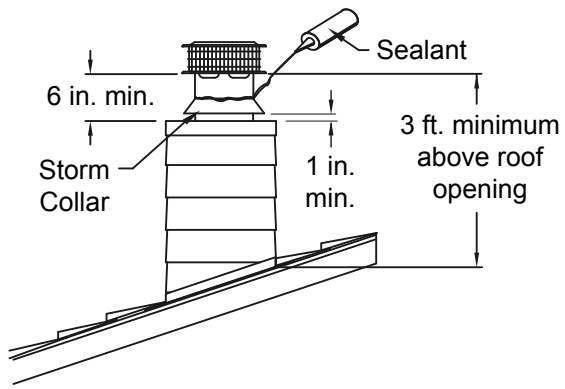

Figure 4.17

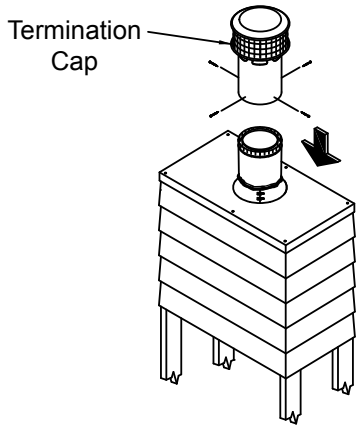

Figure 4.18

O. Chimney Termination Requirements

- Install a cap approved and listed for this fireplace system.
- Locate cap where it will not become plugged by snow or other materials.
- Locate cap away from trees or other structures.
- The bottom of the termination cap must be at least 3 ft (.91 m) above the roof AND at least 2 ft (.61 m) above any portion of roof within 10 ft (3.05 m) as shown in Figure 4.19.
- See Figure 4.19 for distance required between caps.

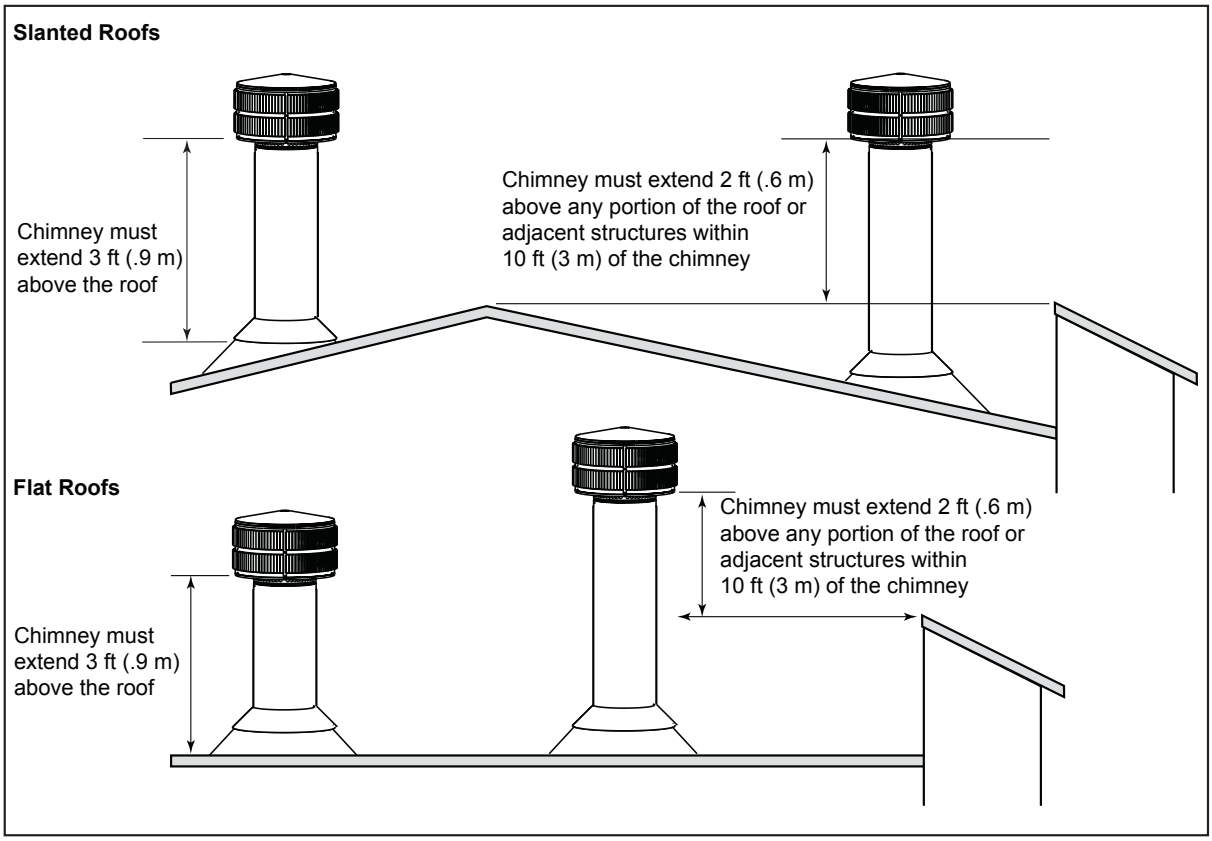

Multiple Chimney Locations

A	B
6 in. (minimum) up to 20 in. *152 mm/508 mm*	18 in. minimum *457 mm*
20 in. and over	0 in. minimum

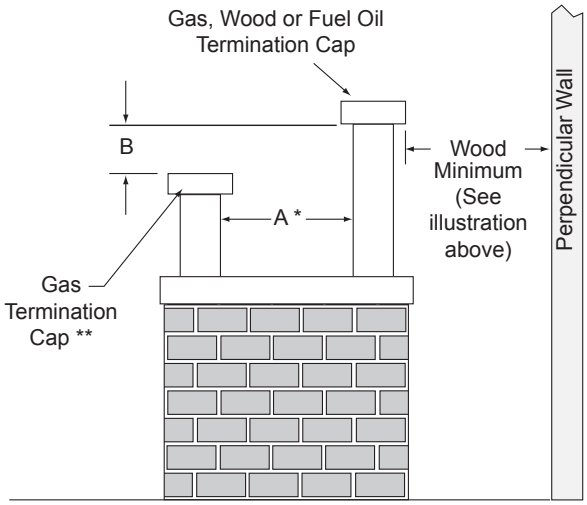

* If using decorative cap cover(s), this distance may need to be increased. Refer to the installation instructions supplied with the decorative cap cover.

** In a staggered installation with both gas and wood terminations, the wood termination cap must be higher than the gas termination cap.

Figure 4.19 Multiple Chimney Locations

5 Shrouds

A. Shroud Requirements

***WARNING! Risk of Fire!** Shrouds must be constructed as specified. Improper construction may overheat chase top.*

- Chase top shrouds may be field constructed where permitted by regional building codes.

  ***NOTICE:** Some regional codes require an agency-Listed shroud. Consult your local building officials.*

Shrouds can either be field-fabricated or factory-fabricated, but they must meet the requirements as specified in these instructions. Shrouds must be constructed of a minimum 24 ga (.024 in.) stainless steel, aluminized steel, galvanized steel, or copper. Other materials may also be used, such as brick, mortar, stucco, stone, etc. provided they are completely non-combustible. Check with your local building code authorities for any additional shroud requirements. Shrouds must be able to be removed to allow chimney access to properly clean the chimney. DuraChimney II installations which include the use of a shroud must comply with the following requirements (Figure 5.1)

- DuraChimney II must maintain at least 2 in. (51 mm) clearance from combustible materials.
- The chase enclosure must be ventilated.
- The chase top flashing or field-fabricated chase pan must be used. Field-fabricated chase pans are acceptable if they meet these requirements:
  - Material must be 24 ga (.024 in) galvanized steel or equivalent.
  - Chase pan must have opening 3 in. (76 mm) larger than outside diameter of chimney pipe with at least a 1/2 in. (13 mm) upturned flange/collar.
  - Chase pan must overhang chase by 1/2 in. (13 mm) per side for proper air flow.
  - Chase pan must have a 1 in. (25 mm) down turned outside edge (weather protection).

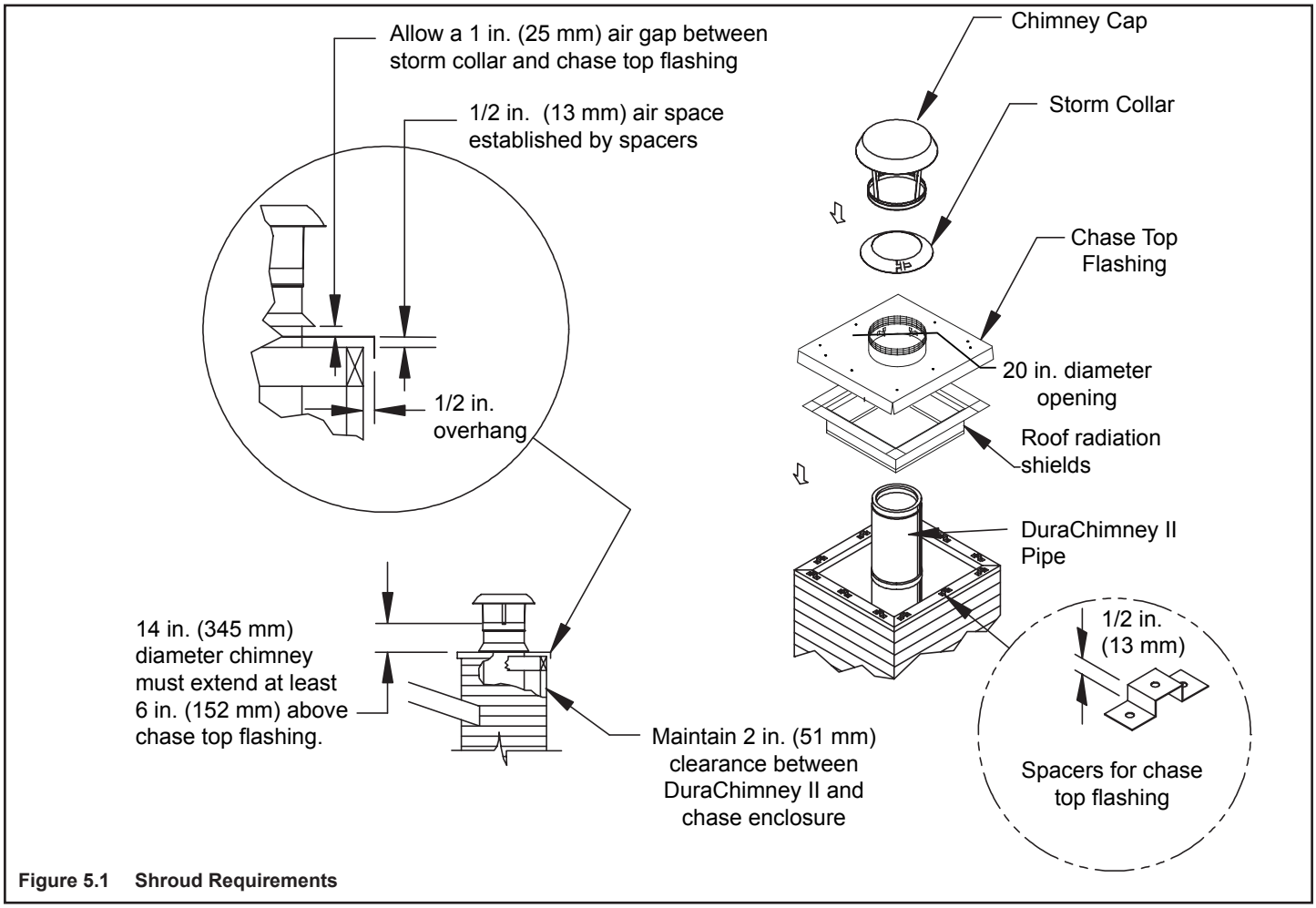

Figure 5.1 Shroud Requirements

- Field-fabricated spacing clips (1/2 in./13 mm tall, 24 ga/.024 in. galvanized steel) must be used to support the chase top flashing or chase pan, in order to provide air flow.
- 14 in. (345 mm) DuraChimney II pipe must extend at least 6 in. (152 mm) above the chase pan/flashing.
- A DuraChimney II cap must be used inside the shroud.
- The shroud must not be in direct contact with any of the DuraChimney II components (other than the chase top flashing).
- All open areas of the shroud must be covered with 1/2 in. (13 mm) stainless or galvanized steel mesh screen to prevent debris from entering the shroud.
- Shrouds must follow the dimensional requirements specified in Tables 5.1, 5.2 or 5.3, depending on the style of shroud used. The three basic shroud styles are 1) House, 2) Arch or Mailbox, and 3) Pyramid. Most factory-fabricated shrouds will fall under one of these basic style categories.

B. House Style Shroud

The house-style shroud is roughly square or rectangular with a closed top and exhaust openings on four sides (Figure 5.2). Table 5.1 lists the minimum shroud dimensions, the minimum open area per side, and the minimum total open area for the shroud.

Table 5.1

House Style Shroud Minimum Dimensions											
Chimney Diameter		Chimney Area		Min Height H		Min Length L		Min Width W		Min Open Area per side	Min Total Open Area
in	*mm*	*in*	*mm*	*in*	*mm*	*in*	*mm*	*in*	*mm*	*sq in*	*sq in*
14	355.6	154	3911.6	24	609.6	32	812.8	32	812.8	260	1040

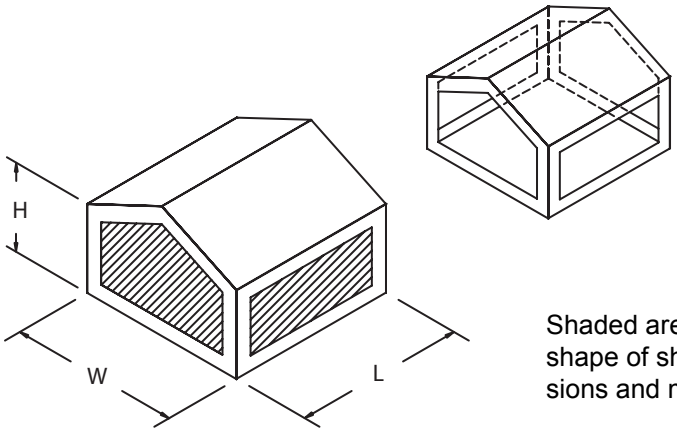

H: Minimum height of shroud
L: Minimum length of shroud
W: Minimum width of shroud

Shaded area represents screened open area. Actual shape of shroud may vary as long as minimum dimensions and minimum open area requirements are met.

Figure 5.2 House-Style Shroud Minimum Dimensions

C. Arch / Mailbox Style Shroud

The arch or mailbox style shroud generally has two solid sides and a solid top. The exhaust openings are on the two open ends of the arch (Figure 5.3). Table 5.2 lists the minimum shroud dimensions, the minimum open area per side, and the minimum total open area for the shroud.

Table 5.2

Arch / Mailbox Style Shroud Minimum Dimensions											
Chimney Diameter		Chimney Area		Min Height H		Min Length L		Min Width W		Min Open Area per side	Min Total Open Area
in	*mm*	*in*	*mm*	*in*	*mm*	*in*	*mm*	*in*	*mm*	*sq in*	*sq in*
14	355.6	154	3911.6	24	609.6	32	812.8	32	812.8	520	1040

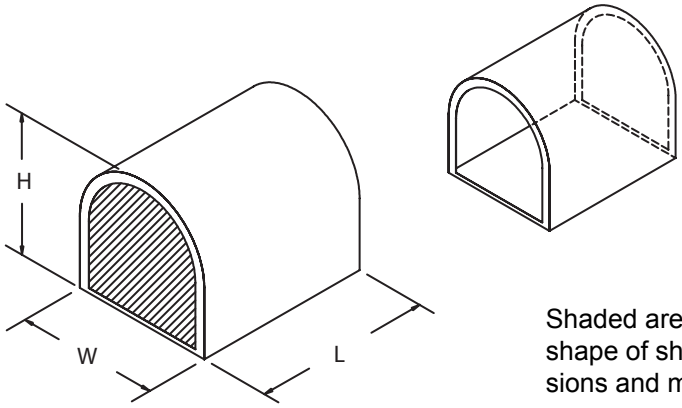

H: Minimum height of shroud
L: Minimum length of shroud
W: Minimum width of shroud

Shaded area represents screened open area. Actual shape of shroud may vary as long as minimum dimensions and minimum open area requirements are met.

Figure 5.3 Arch/Mailbox-Style Shroud Minimum Dimensions

D. Pyramid Style Shroud

The pyramid style shroud is roughly square or rectangular with an open top for exhaust as well as openings along the base of the four sides (Figure 5.4). Table 5.3 lists the minimum shroud dimensions, including the minimum height and length of the base opening.

Table 5.3

Pyramid Style Shroud Minimum Dimensions											
Chimney Diameter		Min Height H1		Min Length L		Min Width W		Min Base B		Min Height H2	
in	*mm*	*in*	*mm*	*in*	*mm*	*in*	*mm*	*in*	*mm*	*in*	*mm*
14	355.6	24	609.6	32	812.8	32	812.8	22	558.8	2	50.8

L: Minimum length of shroud top opening
W: Minimum width of shroud top opening
H1: Minimum total height of shroud
B: Minimum length of opening along base
H2: Minimum height of opening along base

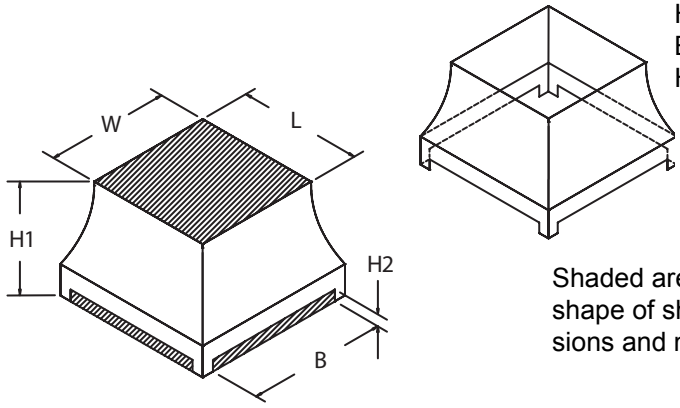

Shaded area represents screened open area. Actual shape of shroud may vary as long as minimum dimensions and minimum open area requirements are met.

Figure 5.4 Pyramid-Style Shroud Minimum Dimensions

6 Finishing

A. Finishing Material

Refer to Sections 1.B. and Sections 1.C. for combustible/ non-combustible materials. Refer to Figure 6.1 for non-combustible zone.

***WARNING! Risk of Fire!** You must maintain clearances.*

- ***DO NOT** cover metal fireplace front with combustible materials.*
- *Install combustible materials only to specified clearances on top front and side edges.*

- Apply metal lath to the metal face or non-combustible board with corrosion-resistant, self-drilling, self-tapping screws capable of penetrating the metal surface of the fireplace face in preparation for final finishing material.
- Complete framing and apply drywall over framing.
- A bead of 300° F minimum non-combustible sealant must be used to close off any gaps at the top and sides between the fireplace and drywall to prevent cold air leaks.
- Large gaps can be bridged with fiberglass rope gasket.

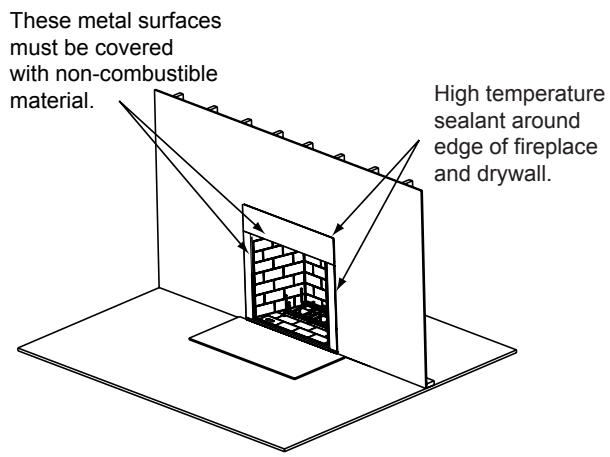

Figure 6.1 Non-combustible Facing

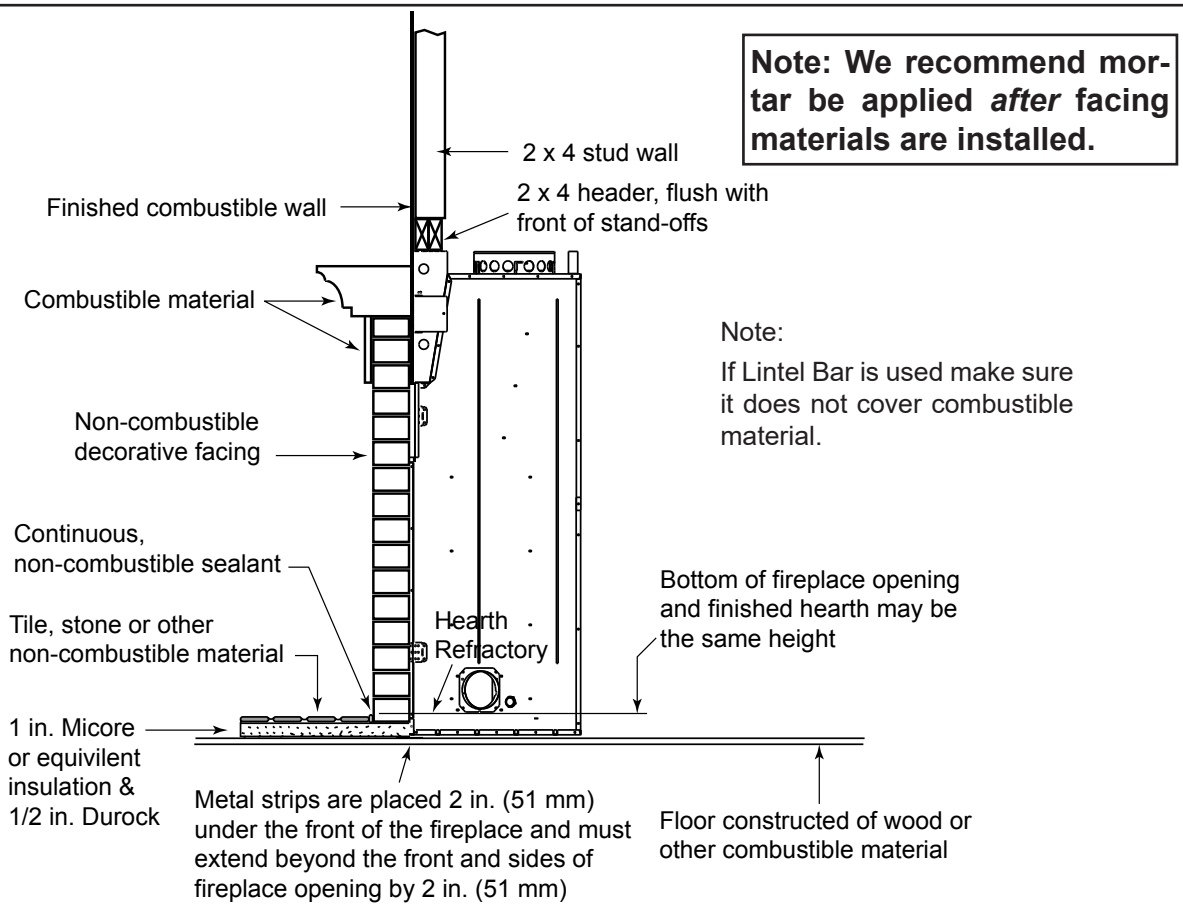

Figure 6.2 Decorative Facing

***VERY IMPORTANT**: Allow the mortar 72 hours to cure before operating the fireplace.*

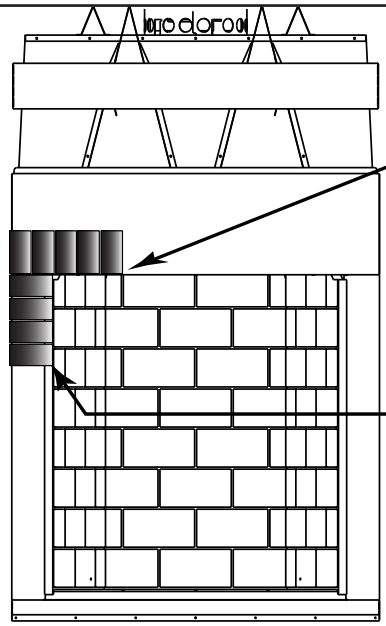

The noncombustible finishing material across the top of fireplace opening will be even with lower edge of metal face.

If Mortar is applied, it should be applied after finishing material is installed. Mortar will be applied between finishing materials and molded brick edges, bottom and sides.

The seam between finishing materials and firebox top must be sealed with non-combustible sealant.

Noncombustible finishing materials MUST overlap side faces by 1 1/4 in. (32 mm) to cover the edges of the panels. Finished opening should be 50 x 38 in. (1270 mm x 965 mm) to allow for door installation.

The surface of the finished hearth extension and the surface of the hearth panel should be level.

Figure 6.3 Facing Materials and Mortar

B. Hearth Extension, Building and Finishing

***WARNING! Risk of Fire!** High temperatures, sparks, embers or other burning material falling from the fireplace may ignite flooring or concealed combustible surfaces.*

- *Protective metal hearth strips MUST be installed.*
- *Hearth extensions MUST be installed exactly as specified.*

A hearth extension must be installed with all fireplaces to protect the combustible floor in front of the fireplace from both radiant heat and sparks.

- You MUST use a hearth extension with this fireplace.
- Refer to Figure 6.4 for minimum dimensions.
- This fireplace has been tested and approved for use with a hearth extension insulated to a minimum R value of 2.32.
- The hearth extension material MUST be covered with tile, stone or other non-combustible material.
- Manufactured hearth materials will usually have a published **R value** (resistance to heat) or **k value** (conductivity of heat). Refer to the formula in Table 6.1 to convert a k value to an R value,
- Refer to Table 6.2 for hearth extension insulation alternatives.

Table 6.1

R = 1/k x inches of thickness

Table 6.2

Hearth Extension Insulation Alternatives, R Value = 2.32			
Material	**k per inch thick**	**r per inch thick**	**Minimum thickness required**
Hearth & Home HX3, HX4	0.49	2.06	1-1/8 in.
USG Micore 300™	0.49	2.06	1-1/8 in.
USG Durock™ Cement Board	1.92	0.52	4-1/2 in.
Cement Mortar	5.0	0.20	11-5/8 in.
Common Brick	5.0	0.20	11-5/8 in.
Ceramic Tile	12.50	0.08	29 in.
Armstrong™ Privacy Guard Plus	0.46	2.18	1-1/16 in.
Marble	14.3-20.0	0.07-0.05	33-1/8 - 46-1/2 in.

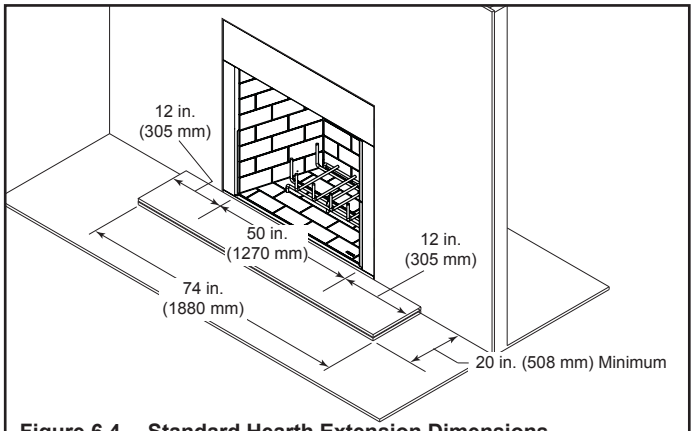

Figure 6.4 Standard Hearth Extension Dimensions

1. Fireplace Installed Flush on the Floor and Hearth Extension Raised to Bottom of Firebox Opening

Non-combustible flooring a minimum of 20 in. (508 mm) in front of and 12 in. (305 mm) to each side of the fuel opening is required.

The hearth framing must be constructed of non-combustible materials (such as metal framing or equivalent material) and placed on HX3(s) or HX4(s) and 1/2 in. Durock, or equivalent material. See Figures 6.4 and 6.5.

When creating the platform, allow for the thickness of the non-combustible finishing materials.

Seal gaps between the hearth extension and the front of the fireplace with a bead of non-combustible sealant or grout.

Note: The bottom of the fireplace opening is 3-3/4 in. (95.3mm) above the bottom of the fireplace. Finished hearth must NOT extend above this level.

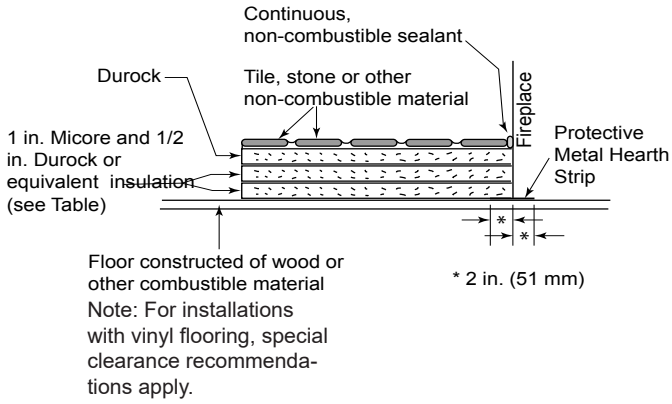

Figure 6.5 Standard Hearth Extension Construction

Vinyl Flooring

Vinyl Flooring is sensitive to heat. A 48 inch minimum depth hearth extension is recommended when using vinyl flooring up to the wall. See Figure 6.5.

Notice: Clearances that do not meet the minimum guidelines could result in damage or buckling to the vinyl flooring and is done at the installer's or homeowner's risk.

Hearth and Home Technologies does not recommend adhesive based vinyl flooring due to thermal expansion. Floating-style flooring can be used, but will reach temperatures up to 110°F in a room with ambient temperatures of 70°F. Consult flooring specifications to ensure compatibility.

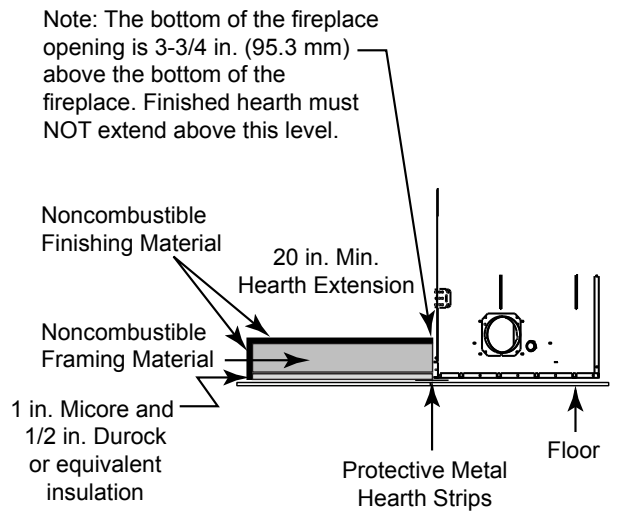

Figure 6.6 Raised Platform Hearth Extension Detail

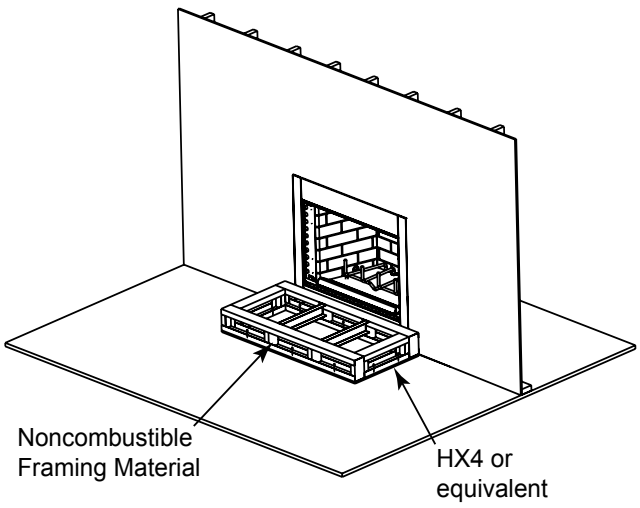

Figure 6.7 Raised Platform Hearth Extension-Framing

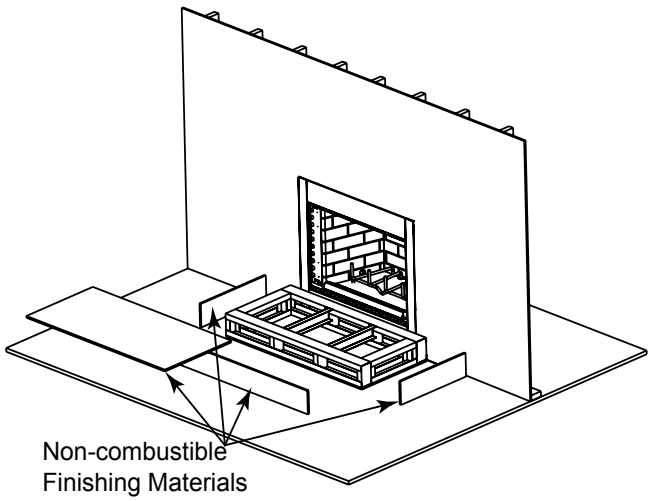

Figure 6.8 Raised Platform Hearth Extension-Finishing

2. Raised Hearth Extension and Raised Fireplace

Non-combustible flooring a minimum of 20 in. (508 mm) in front of and 12 in. (305 mm) to each side of the fuel opening is required.

The hearth framing must be constructed of non-combustible materials (such as metal framing or equivalent material) and placed on HX3(s) or HX4(s) and 1/2 in. Durock, or equivalent material. See Figure 6.9.

When creating the platform, allow for the thickness of the non-combustible finishing materials.

Seal gaps between the hearth extension and the front of the fireplace with a bead of non-combustible sealant or grout.

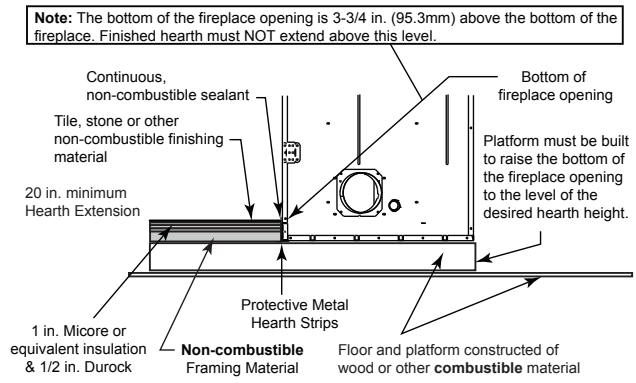

Figure 6.9 Raised Hearth Extension and Fireplace Framing Materials

3. Fireplace Opening and Hearth Extension Flush with the Floor

Non-combustible flooring a minimum of 30 in. (762 mm) in front of and 12 in. (305 mm) to each side of the fuel opening is required.

The hearth framing must be constructed of non-combustible materials (such as metal framing or equivalent material) and placed on HX3(s) or HX4(s) and 1/2 in. Durock, or equivalent material. See Figure 6.10.

When creating the platform, allow for the thickness of the non-combustible finishing materials.

Seal gaps between the hearth extension and the front of the fireplace with a bead of non-combustible sealant or grout.

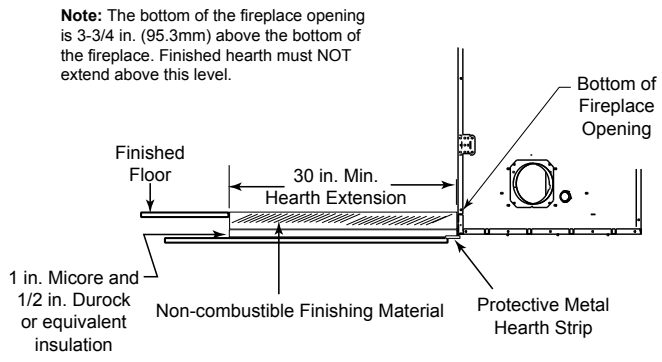

Figure 6.10 Flush Hearth Extension Side View

C. Non-Combustible Sealant Material

After completing the framing and applying the facing materials over the framing, a bead of non-combustible sealant must be used to close off any gaps at the top and sides between the fireplace and hearth.

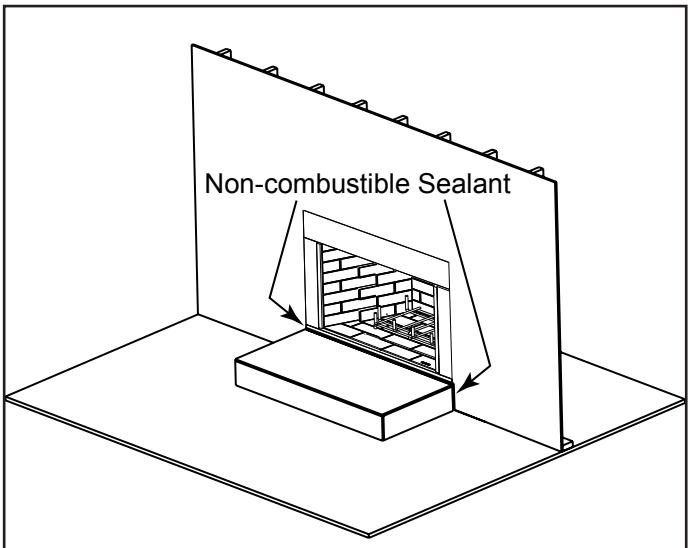

Figure 6.11 Place Non-combustible Sealant

WARNING! Risk of Fire!

Hearth & Home Technologies is not responsible for discoloration, cracking or other material failures of finishing materials due to heat exposure or smoke.

- *Choose finishing materials carefully.*

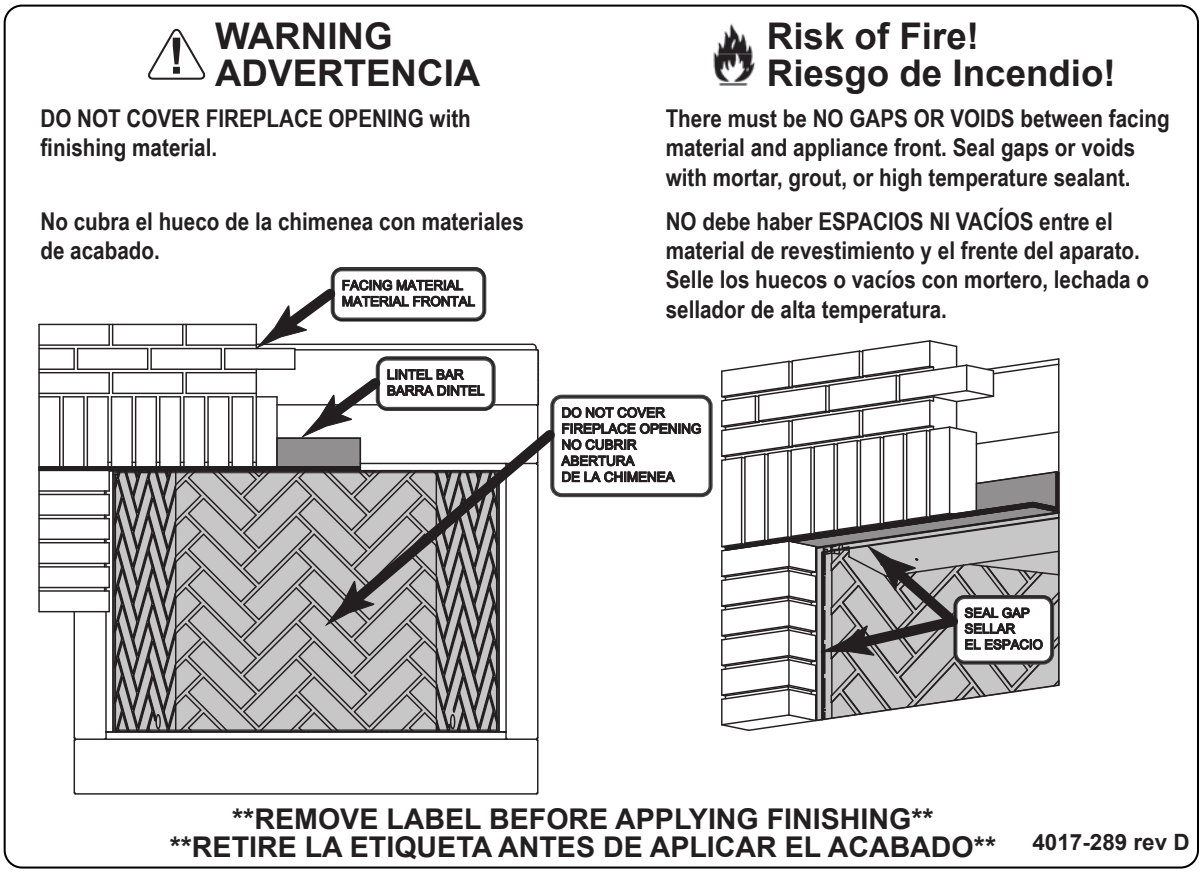

NON-COMBUSTIBLE label attached to firescreen by manufacturer.

D. Mantel and Wall Projections

The combustible mantel may have a maximum depth of 12 in. (305 mm) positioned 22 in. (559 mm) above the fireplace opening. Combustible trim pieces that project no more than 1 1/2 in. (38 mm) from the face of the fireplace can be placed no closer than 6 in. (152 mm) from the top of the decorative front. Combustible trim must not cover:

- the metal surfaces of the fireplace
- where the non-combustible board is placed over the metal surfaces
- the space between the metal face of the fireplace and framing members

A non-combustible mantel can be placed lower than Figure 6.13, but all building materials that construct the wall must be changed to non-combustible.

WARNING! Risk of Fire!

You must seal around the finishing material to fireplace.

Hearth & Home Technologies is not responsible for discoloration, cracking or other material failures of finishing materials due to heat exposure or smoke.

- *Choose finishing materials carefully.*

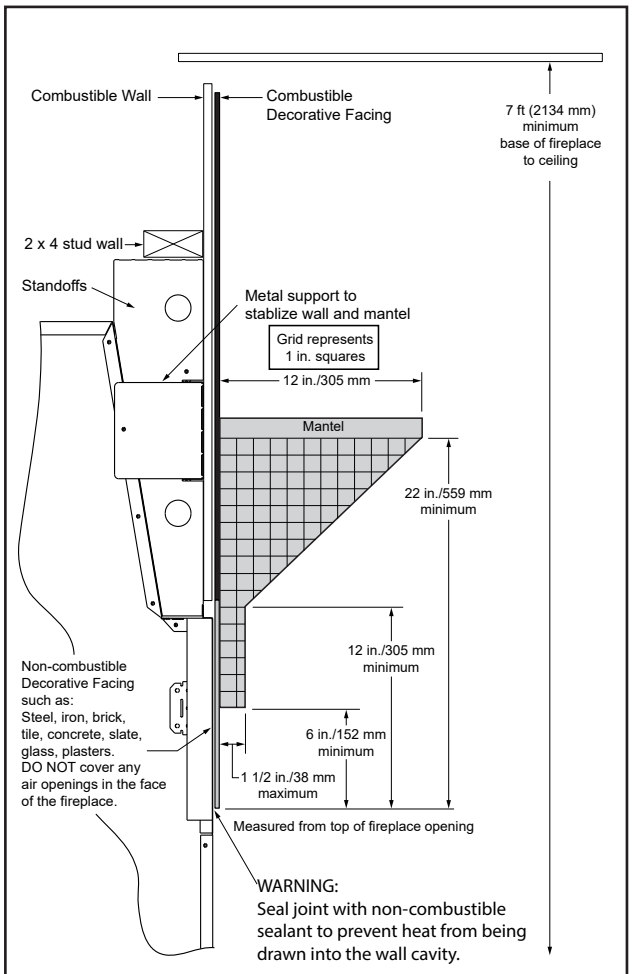

Figure 6.12 Mantel Specifications - Combustible

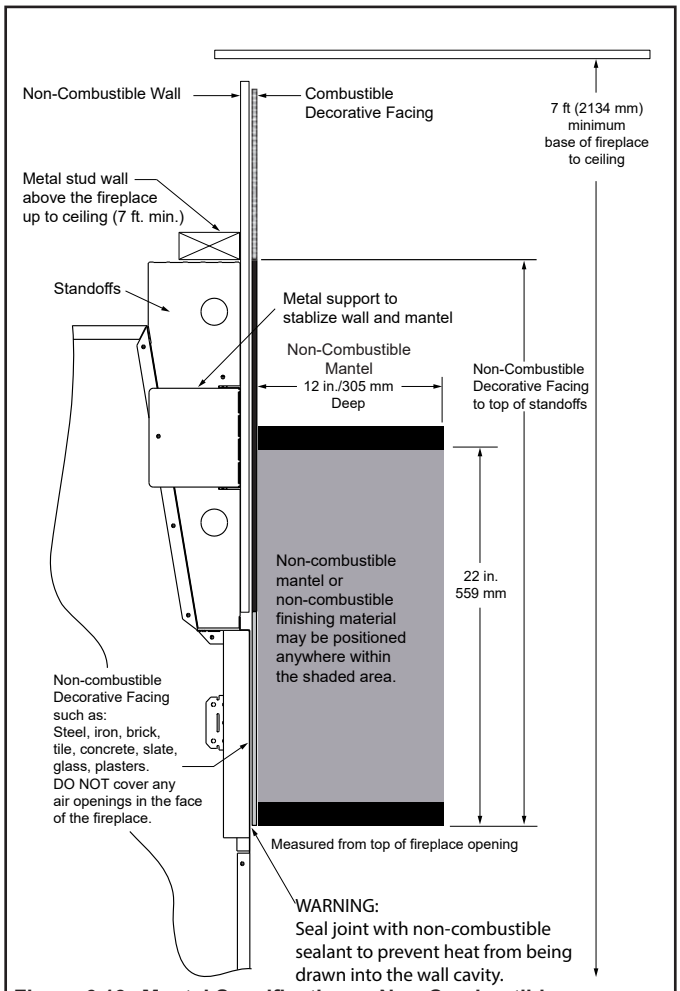

Figure 6.13 Mantel Specifications - Non-Combustible

E. Sidewalls/Surrounds

- Locate adjacent combustible sidewalls a minimum of 24 in. (610 mm) from fireplace opening.
- Mantle leg, surround, stub wall, whether combustible or non-combustible, may be constructed as shown in Figure 6.14.

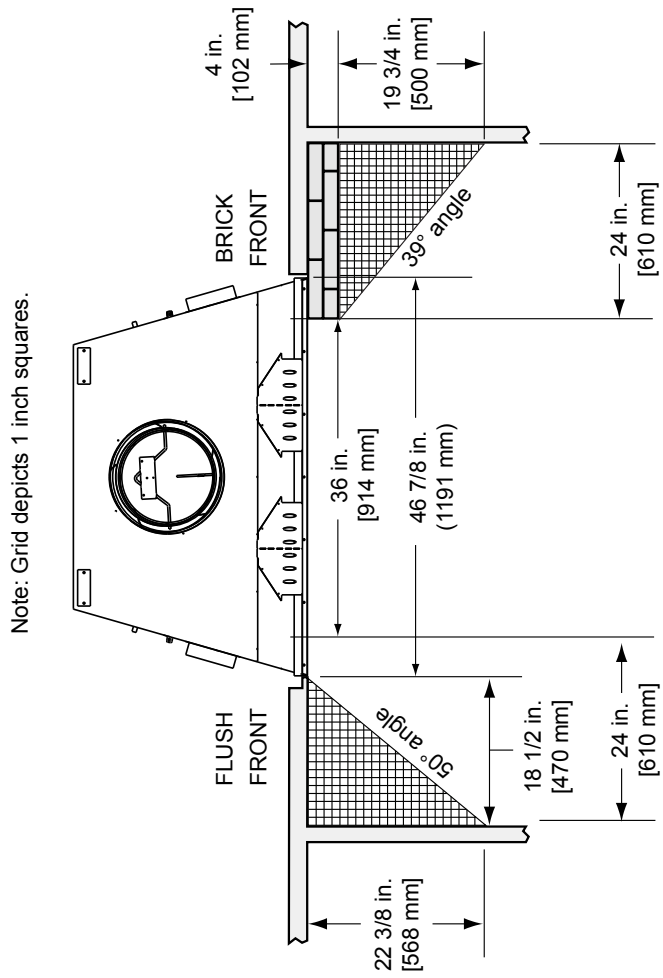

Figure 6.14 Mantel Leg, Surround or Wall Projection (acceptable on both sides of opening)

7 Fireplace Setup

A. Refractory Panel Kit in Crate

- The Refractory Panels are shipped in a sturdy crate with 3 to 4 trays for individual Refractory Panels.
- Remove the lid from crate to access Refractory Panels.
- Remove all corner brackets from the crate.
- Use a clean paint brush to remove any accumulated dust from Refractory Panel before removing it from the crate. See Figure 7.

Figure 7 Clean Refractory Panel

B. Install Back Refractory Panel

- Remove screen rods.
- Remove smoke shield.
- Install the back refractory. Center from side to side.
- Secure back refractory at the top edge using refractory retainers provided with the fireplace. Holes for screws will need to be drilled.
- Tighten these and all previously installed brackets.

C. Install Hearth Refractory Panel

- Place hearth into the fireplace with gap to back.
- Refer to Figure 7.1.
- Set the grate retainers centered along back edge of hearth and spaced to match the grate.
- Push hearth to meet back and secure grate retainers.

D. Install Side Refractory Panel

- If a gas line is to be installed, remove the knockouts in the inner firebox and in the outer shell on the side of your choice. Refer to dimension drawings for location of knockouts and Section 7.4. for gas provisions.
- Install side panel, tapered edge to the front. Align the front edge with the front of the column (or butted to the surround if installed).
- Tighten these and all previously installed brackets.
- Install second side panel following the steps above.
- Replace smoke shield.

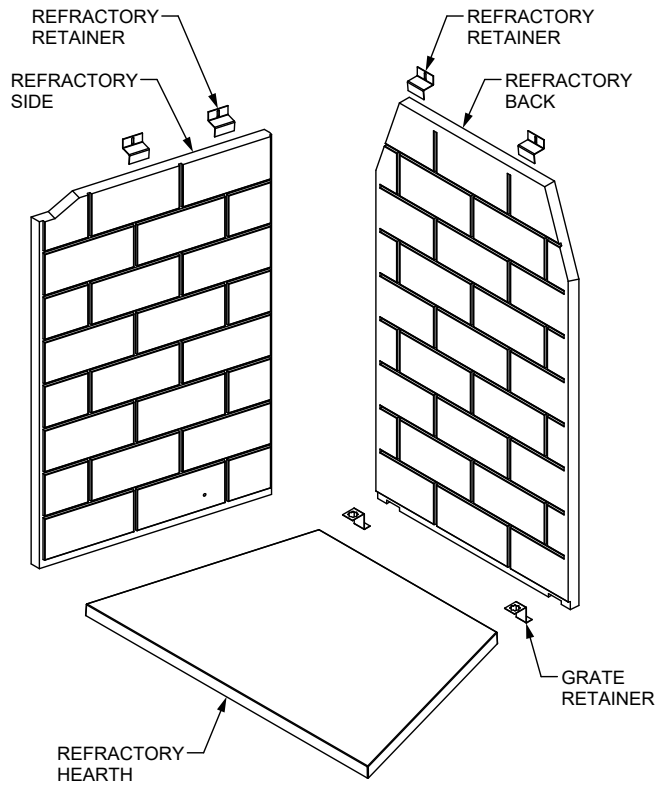

Figure 7.1 Traditional Refractory Panel

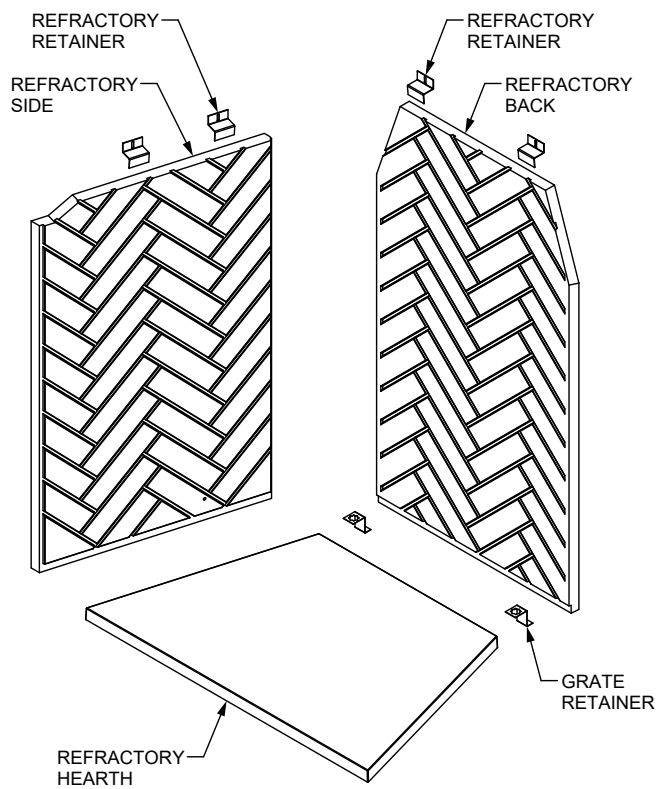

Figure 7.2 Herringbone Refractory Panel

E. Firebrick Installation

- The interior of the fireplace must be finished with either refractory panels or firebrick installed with mortar.
- Use an indoor/outdoor medium duty refractory mortar meeting ASTM C199. Firebrick must meet ASTM C27 and C1261. Also firebrick installation should comply with local and/or regional codes.
- It is highly recommended that firebrick be laid up by someone with masonry experience. It is recommended to interlace firebricks in the joint between the back and side walls. Use minimum 1/8” grout spacing. Some firebricks will need to be cut-to-size for proper fit-up.
- Mortar may be used to fill the leading edges of the side walls to the non-combustible fireplace facing material.
- Start installing firebrick at the front edge of the firebox floor and work toward the back. Leave 1/2” expansion gaps from firebrick to the firebox sides and back. These gaps will allow room for firebrick to expand during use and should not be filled with mortar. These expansion gaps will be hidden by back and side firebrick.
- Install firebrick against the back wall of the firebox. Leave 1/2” expansion gaps to the firebox sides.
- Install firebrick against both side walls of the firebox. Start installing firebrick from the front of the firebox.
- It is not unusual for installed firebrick to develop heat stress cracks in the firebrick or mortar.
- If installing an approved front or door, please double check the dimensions needed in the installation instructions to ensure the front or door will fit after the firebrick has been installed.

Firebrick and Mortar SKUs		
SKUs	**Firebrick Size**	**Color**
FB-ST-CM	9”x4-1/2”x1-1/4”	Cream
FB-SP-CM	9”x2-1/4”x1-1/4”	Cream
FB-ST-BK	9”x4-1/2”x1-1/4”	Black
FB-ST-RD	9”x4-1/2”x1-1/4”	Red
FB-SP-RD	9”x2-1/4”x1-1/4”	Red
MMMORTR (Need 3-5 buckets per unit)		

Firebrick Usage Estimates		
Firebox Size	**Qty of Split (ST) 9”x4-1/2”x1-1/4”**	**Qty of Soaps (SP) 9”x2-1/4”x1-1/4”**
36”	100	190
42”	105	210
50”	125	230

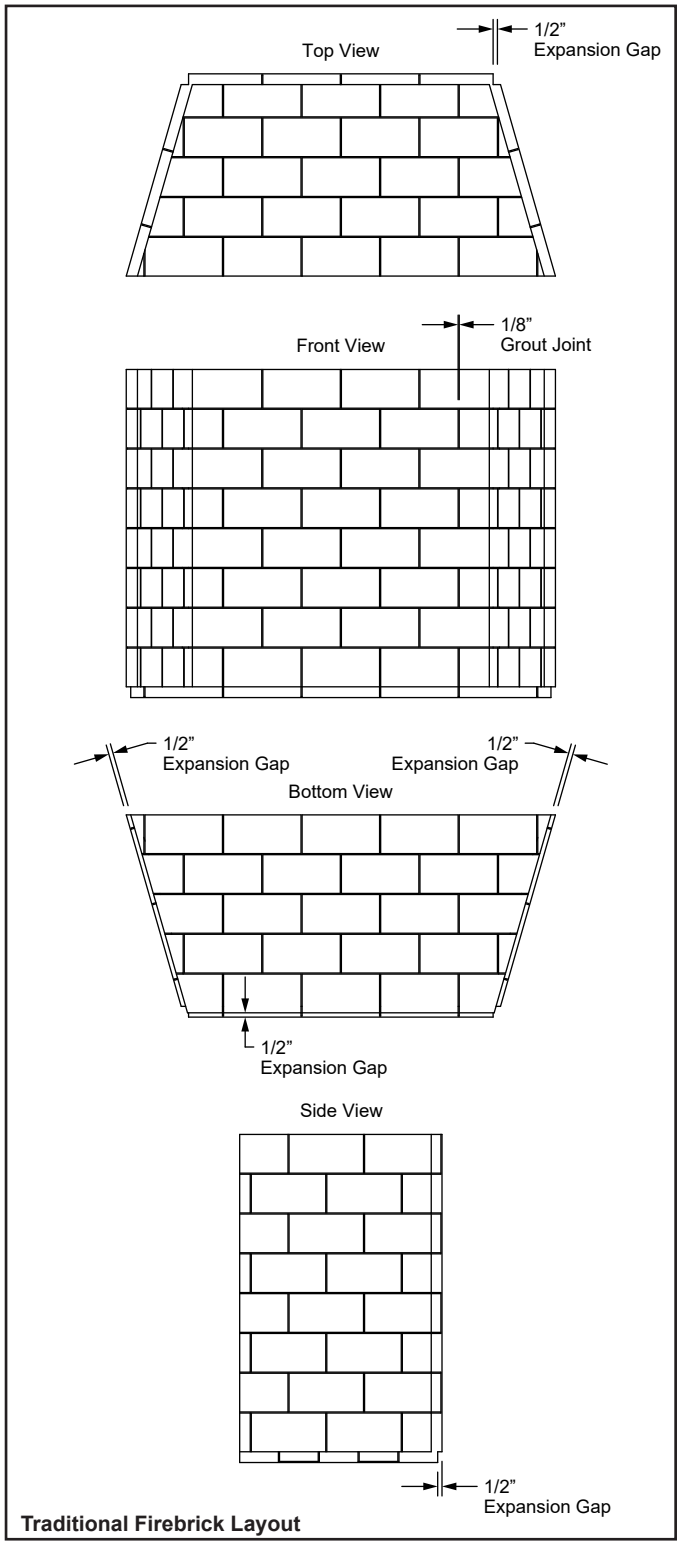

Traditional Firebrick Layout

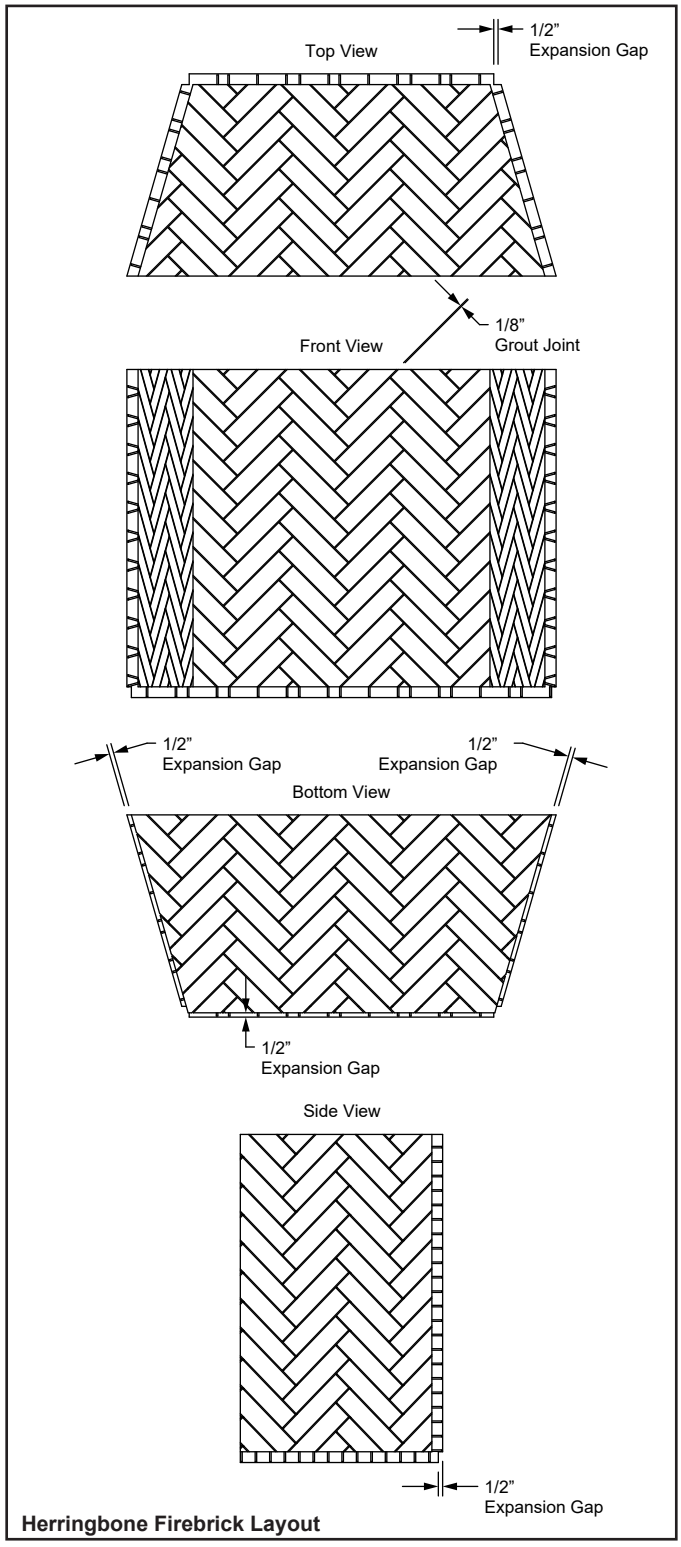

Herringbone Firebrick Layout

F. Install Screens

- Lay one screen panel flat and slide the round end of the rod through the rings starting at the handle side of screen. Leave the last ring off the rod.
- Insert the rod through the hole in the bracket. Slip the last ring over the rod on the other side of the bracket.
- Fasten the flat end of the screen rod back in place using the screw removed earlier.
- Repeat for the other screen panel.

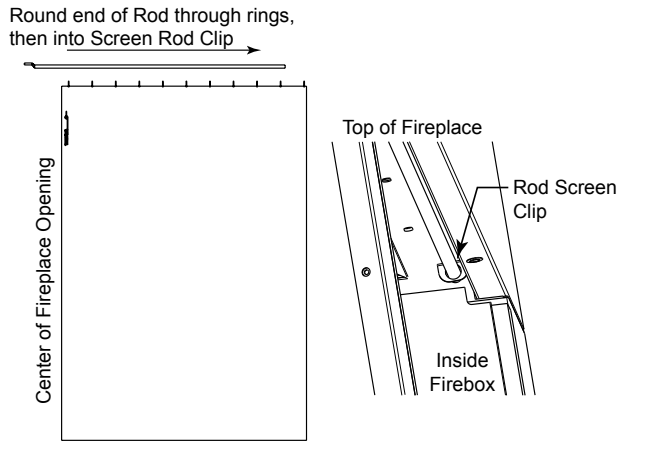

Figure 7.3 Install Screens

G. Install Mortar (Optional)

The brick panels have been designed for installation without the use of mortar being necessary. If the look of mortar is preferred, it is available and can be installed. Follow the directions on the container for mixing.

Note: Herringbone refractory may require two buckets of mortar. The Tranditional requires only one.

H. Grate

- Install the grate if a gas log set is not going to be installed.
- Position the rear grate bar in the Grate Retainer.
- Position the top of the grate retainer over the rear grate bar and fasten in place with screw provided.

I. Gas Log/Lighter Provision

WARNING! Fire and/or Asphyxiation Risk! *Use with solid wood fuel or decorative gas appliance only. Gas fire generates fumes.*

- *Damper must be locked fully open when gas logs are installed*

A certified gas log lighter or decorative gas log set can be installed in this fireplace.

Vented Gas Logs

- Maximum input is 100,000 BTU/hr.
- Decorative gas appliance must be certified to **ANSI Z21.60/CSA 2.26** "Standard for Decorative Gas Appliances for Installation in Vented Fireplaces".
- Must be installed in accordance with the **National Fuel Gas Code, ANSI Z223.1 and Natural Gas Installation Code, CAN/CGA-B149.1-M95 or the Propane Installation Code, CAN/CGA-B149.2-M95.**
- A gas log set must incorporate a gas shutoff.
- Gas Log set requires the damper to be locked fully open.
- A listed automatic damper system with safety interlock may be used in this fireplace with only compatible, listed gas log sets. See damper system manufacturer's instructions.
- Knockouts are provided on both sides of the fireplace and in refractories a masonry hole saw of at least 1 in. (26 mm) must be used to make the hole at the gas line dimple location for 1/2 in. (13 mm) iron pipe.
- Seal refractory around pipe with fireplace mortar or a non-combustible sealant.

Unvented Gas Logs

CAUTION! If an unvented gas appliance is installed in the fireplace, the gas appliance must only be operated with the fireplace glass door fully open (if included). Only unvented gas log sets which have been found to comply with the standard for unvented room heaters, ANSI Z211.11.2, are to be installed in this fireplace. If an unvented gas appliance is installed it must incorporate an automatic shutoff device, and must be installed in accordance with the National Fuel Gas Code Z223.1, Latest edition.

WARNING! Do Not *operate an unvented gas log set in this fireplace with the chimney removed.*

J. Wood Burning Inserts

WARNING! Risk of Fire! *Improper installation of wood inserts may cause fireplace or chimney system to overheat.*

If a wood burning insert is being installed in this fireplace, Hearth & Home Technologies recommends full reline of the chimney.

- Cooling air openings at the top of the chimney must not be obstructed in any manner.
- Hearth & Home Technologies recommends securing the reline at the top of the flue and using the cap certified for use with this fireplace system.

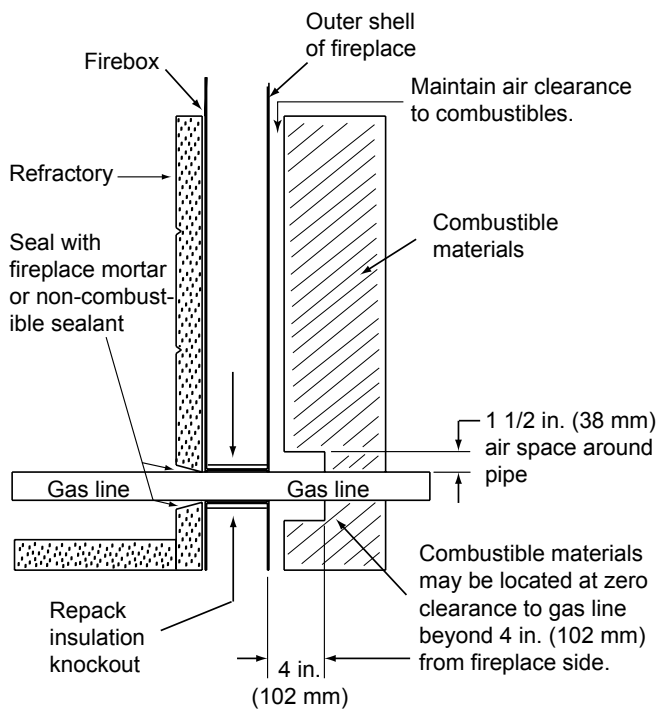

Figure 7.4 Gas Line Installation

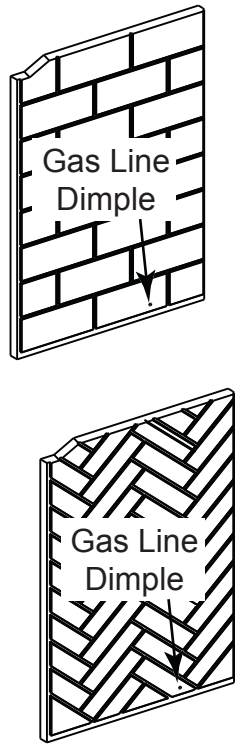

Figure 7.5 Gas Line Dimples

8 Reference Materials

A. Chimney Components

Catalog #	Description
14DCA-12	Pipe 12 inch
14DCA-18	Pipe 18 inch
14DCA-36	Pipe 36 inch
14DCA-48	Pipe 48 inch
14 DCA-E15	15 degree Elbow
14DCA-E30	30 degree Elbow
14DCA-ES	Elbow Strap
14DCA-SS	Supplementary Support
14DCA-ST	Stabilizer
14DCA-FS	Firestop
14DCA-IS	Insulation Shield
14DCA-RRS	Roof Radiation Shield
14DCA-CTF	Chase Top Flashing
14DCA-VC1	Chimney Cap
14DCA-SC	Storm Collar
14DCA-WS	Wall Strap
14DCA-CTC	Chase Top Collar
CT14-A	Adapter-may only be used with the following copper caps
DTO146-BK	Tall Octagon Decorative Cap - Black
DTO146-CP	Tall Octagon Decorative Cap - Copper
DTS146-BK	Tall Square Decorative Cap - Black
DTS146-CP	Tall Square Decorative Cap - Copper

Duravent Pipe Dimensions

ODGF50BZ Glass Doors (optional)

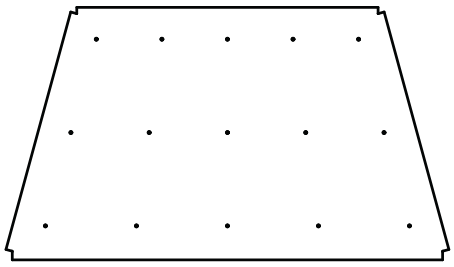

ODCASTLEWD-50DP Drain Pan

B. Optional Components

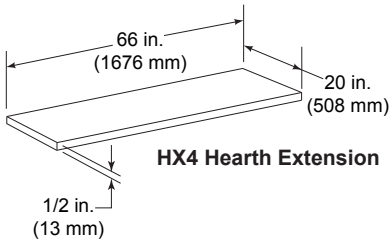

HX4 Hearth Extension

ID6 Insulated Duct 6 in. (152 mm) i.d.

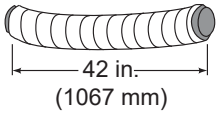

UD6 Uninsulated Duct 6 in. (152 mm) i.d.

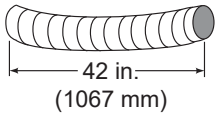

(Required/shipped separately)

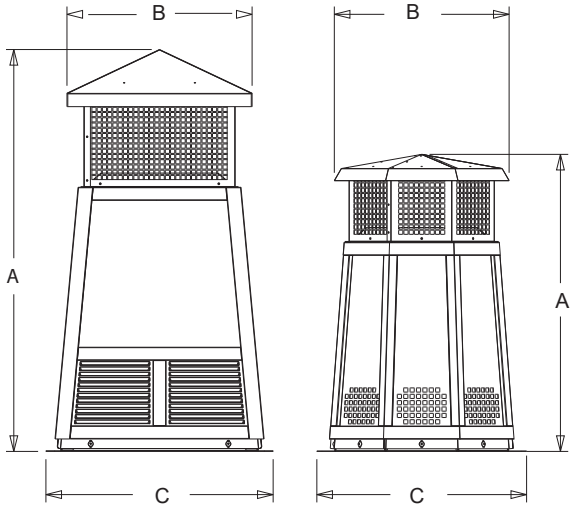

DTS146-BK/CP **DTO146-BK/CP**
Decorative Caps

DTO146-BK/CP		A	B	C
	in	46	22-3/4	26
	mm	1168	577	660

DTS146-BK/CP		A	B	C
	in	46	21-3/16	26
	mm	1168	538	660

See your Outdoor Lifestyles dealer for a complete list of optional components.

Outdoor Lifestyles, a brand of Hearth & Home Technologies
7571 - 215th Street West, Lakeville, MN 55044
www.hearthnhome.com

Please contact your Outdoor Lifestyles dealer with any questions or concerns.
For the location of your nearest Outdoor Lifestyles dealer, please visit www.hearthnhome.com.