Form No. 3413-338 Rev B

60in Bagger Kit

TimeCutter® MX 6050 Riding Mower

Model No. 79396—Serial No. 400000000 and Up

Operator's Manual

⚠ WARNING

CALIFORNIA
Proposition 65 Warning

This product contains a chemical or chemicals known to the State of California to cause cancer, birth defects, or reproductive harm.

Introduction

Read this information carefully to learn how to operate and maintain your product properly and to avoid injury and product damage. You are responsible for operating the product properly and safely.

Whenever you need service, genuine parts, or additional information, contact an Authorized Service Dealer or Customer Service and have the model and serial numbers of your product ready. Figure 1 identifies the location of the model and serial numbers on the product. Write the numbers in the space provided.

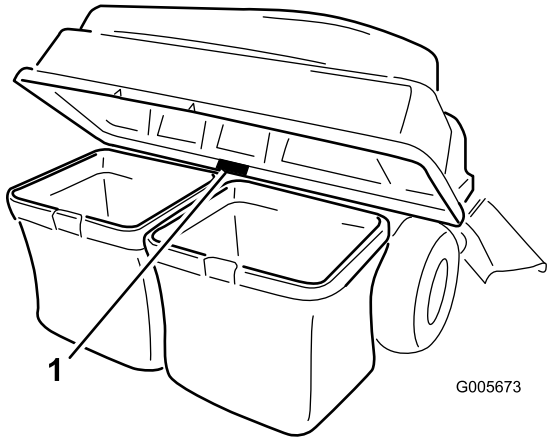

g005673

Figure 1

1. Model and serial number location

Model No. _____

Serial No. _____

This manual identifies potential hazards and has safety messages identified by the safety-alert symbol (Figure 2), which signals a hazard that may cause serious injury or death if you do not follow the recommended precautions.



g000502

Figure 2

1. Safety-alert symbol

This manual uses 2 words to highlight information. **Important** calls attention to special mechanical information and **Note** emphasizes general information worthy of special attention.

© 2017—The Toro® Company
8111 Lyndale Avenue South
Bloomington, MN 55420

Register at www.Toro.com.

Original Instructions (EN)
Printed in the USA.
All Rights Reserved

3413-338 B

Contents

Introduction 1
Safety 3
- Towing Safety 3
- Safety and Instructional Decals 4

Setup 5
- 1 Preparing the Machine 6
- 2 Installing the Weight 6
- 3 Installing the Attachment Mount 8
- 4 Installing the Latch Rod 9
- 5 Assembling the Bagger Top 9
- 6 Installing the Bagger Top 10
- 7 Installing the High-Lift Blades 11
- 8 Installing the Chute 11
- 9 Connecting with the Discharge Tube 13

Operation 14
- Emptying the Grass Bags 14
- Clearing Obstructions from the Bagger 14
- Removing the Bagger 15
- Using the Draw Bar 15
- Operating Tips 16

Maintenance 17
- Recommended Maintenance Schedule(s) 17
- Inspecting the Bagger Attachment 17
- Inspecting the Mower Blades 18
- Cleaning the Bagger Attachment 18

Storage 18
- Storing the Bagger Attachment 18

Safety

⚠ WARNING

Leaves, grass, or brush can catch fire. A fire in the engine area can cause personal injury and property damage.

- **Keep the engine and muffler area free of debris accumulation.**
- **Take care when opening the bagger cover to keep debris from falling onto the engine and muffler area.**
- **Allow the machine to cool before storing it.**

The following list contains safety information specific to Toro products and other safety information you must know.

- Become familiar with the safe operation of the equipment, with the operator controls, and safety signs.
- Use extra care with grass catchers or other attachments. These can change the operating characteristics and the stability of the machine.
- Follow the recommendations for adding or removing weights as described in the *Operator's Manual* for the machine.
- Do not use a grass catcher on steep slopes. A heavy grass catcher could cause loss of control or overturn the machine.
- Slow down and use extra care on hillsides. Mow slopes side to side. Turf conditions can affect the stability of the machine. Use extreme caution while operating near drop-offs.
- Keep all movement on slopes slow and gradual. Do not make sudden changes in speed, directions, or turning.
- The grass catcher can obstruct the view to the rear. Use extra care when operating the machine in reverse.
- Use care when loading or unloading the machine into a truck or trailer.
- Park the machine on a level surface, disengage the drives, engage the parking brake, and shut off the engine before leaving the operating position for any reason, including unclogging or emptying the grass catcher.
- If you remove the grass catcher, install any discharge deflector or guard that was removed to install the grass catcher. Do not operate the machine without either the entire grass catcher or the grass deflector in place.
- Do not leave grass in grass catcher for extended periods of time.
- Grass catcher components are subject to wear, damage, and deterioration, which could expose moving parts or allow objects to be thrown. Frequently check components and replace them with manufacturer's recommended parts when necessary.

Towing Safety

- Do not attach towed equipment except at the hitch point.
- Follow the attachment manufacturer's recommendation for weight limits for towed equipment and towing on slopes.
- Never allow children or others in or on towed equipment.
- On slopes, the weight of the towed equipment may cause loss of traction and loss of control. Reduce towed weight and slow down.
- Stopping distance increases with the weight of the towed load. Travel slowly and allow extra distance to stop.
- Make wide turns to keep the attachment clear of the machine.
- Do not tow a load that weighs more than the towing machine.

Safety and Instructional Decals

Safety decals and instructions are easily visible to the operator and are located near any area of potential danger. Replace any decal that is damaged or missing.

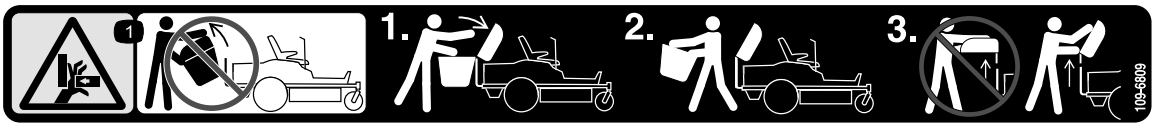

decal109-6809

109-6809

1. Crushing hazard of hand—do not remove the whole bagger from the machine; open the bagger top and then remove the bag(s) from the bagger. Do not remove the bagger top when it is closed; open the bagger top and then remove it.

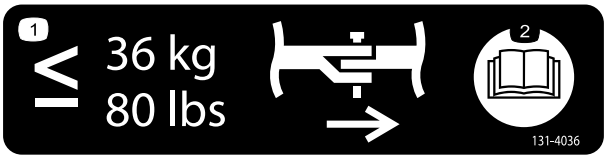

decal131-4036

131-4036

1. The maximum drawbar pull is 36 kg (80 lb).
2. Read the *Operator's Manual*.

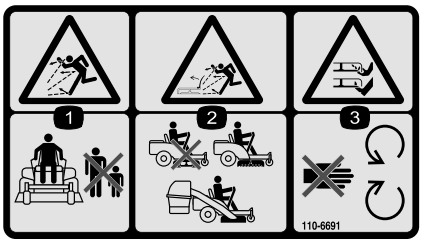

decal110-6691

110-6691

1. Thrown object hazard—keep bystanders a safe distance away from the machine.
2. Thrown object hazard, mower—do not operate without the deflector, discharge cover, or grass collection system in place.
3. Cutting/dismemberment of hand or foot—stay away from moving parts.

Setup

Loose Parts

Use the chart below to verify that all parts have been shipped.

Procedure	Description	Qty.	Use
1	No parts required	–	Prepare the machine.
2	Weight tray Left weight-tray mount Right weight-tray mount Suitcase weight—16 kg (35 lb) Retaining rod Bolt (3/8 x 1-1/4 inches) Flange nut (3/8 inch) Carriage bolt (3/8 x 1 inch) Self-tapping bolt (5/16 x 3/4 inch)	1 1 1 1 1 2 4 2 2	Install the weight.
3	Stabilizer bracket Carriage bolt (5/16 x 3/4 inch) Locknut (5/16 inch) Self-tapping screw (5/16 x 3/4 inch) Bolt (5/16 x 1 inch) Pivot frame Hairpin cotter Rod Washer Draw-bar decal	1 2 4 2 2 1 2 2 2 1	Install the attachment mount.
4	Latch rod Hairpin cotter	1 1	Install the latch rod.
5	Bagger top Bagger screen	1 1	Assemble the bagger top.
6	Grass Bag Upper bagger tube	2 1	Install the bagger top.
7	High-lift blade	3	Install the high-lift blades.
8	Curved baffle Locknut (5/16 inch) Hand knob Washer Chute	1 1 1 1 1	Install the chute.
9	Discharge tube	1	Connect with the discharge tube.

Note: Determine the left and right sides of the machine from the normal operating position.

1

Preparing the Machine

No Parts Required

Procedure

1. Park the machine on a level surface and disengage the drives.
2. Engage the parking brake.
3. Shut off the engine and remove the key.
4. Wait for all moving parts to stop before leaving the operating position.
5. Ensure that the machine is secure from movement and allow surfaces to cool before you begin to work on it.
6. Clean the machine of any debris on the machine deck or rear part of the machine to ease installation.

2

Installing the Weight

Parts needed for this procedure:

1	Weight tray
1	Left weight-tray mount
1	Right weight-tray mount
1	Suitcase weight—16 kg (35 lb)
1	Retaining rod
2	Bolt (3/8 x 1-1/4 inches)
4	Flange nut (3/8 inch)
2	Carriage bolt (3/8 x 1 inch)
2	Self-tapping bolt (5/16 x 3/4 inch)

Procedure

⚠ CAUTION

The bagger changes the weight distribution of the machine. Operating the machine without the front weights may cause an unstable condition, which could result in a loss of control.

Ensure the front weights are properly installed before operating the machine with the bagger attachment.

1. Remove the existing bolt and nut from the left and right side of the platform where you will install the weight-tray mounts.
2. Use the 2 self-tapping bolts (5/16 x 3/4 inch), 2 bolts (3/8 x 1-1/4 inches), and flange nuts (3/8 inch) to secure the left and right weight-tray mounts to the machine (Figure 3).

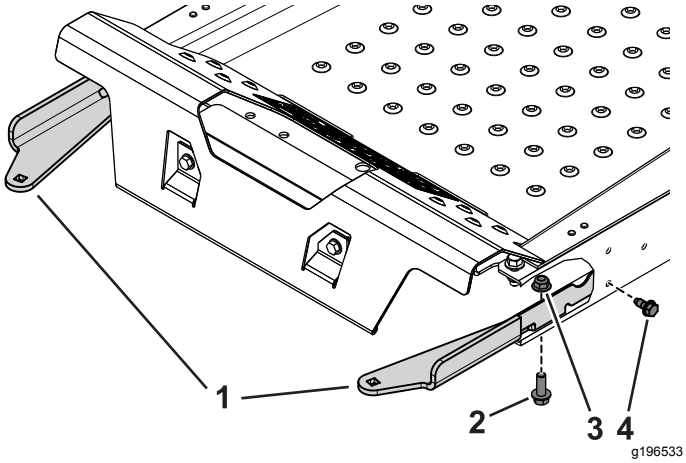

Figure 3
Cutaway view

1. Weight-tray mounts
2. Bolt (3/8 x 1-1/4 inches)
3. Flange nut (3/8 inch)
4. Self-tapping bolt (5/16 x 3/4 inch)

3. Use the 2 carriage bolts (3/8 x 1 inch) and flange nuts to secure the weight tray to the mounts (Figure 4).

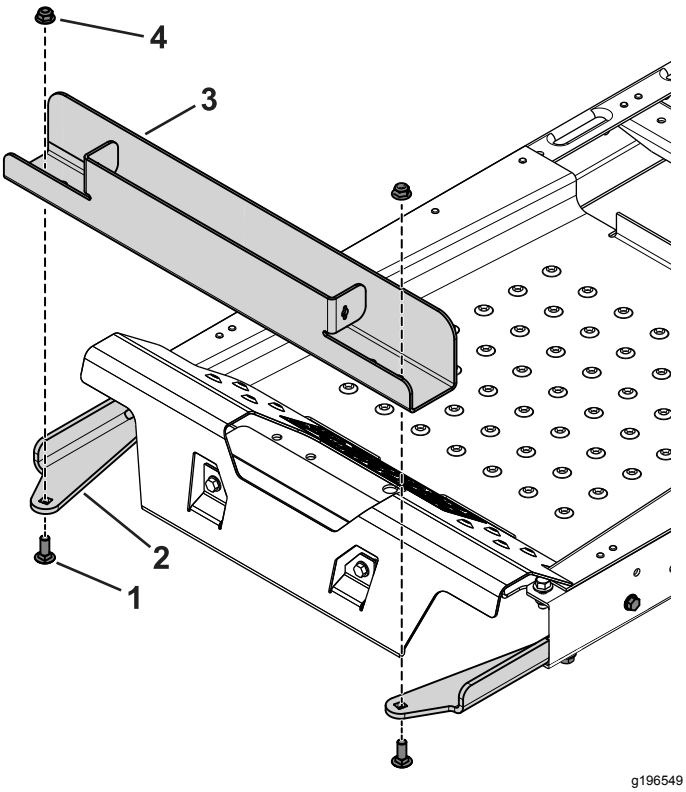

Figure 4

1. Carriage bolt (3/8 x 1 inch)
2. Weight-tray mount
3. Weight tray
4. Flange nut (3/8 inch)

4. Insert the suitcase weight into the weight tray with the groove side facing toward the front of the machine (Figure 5).

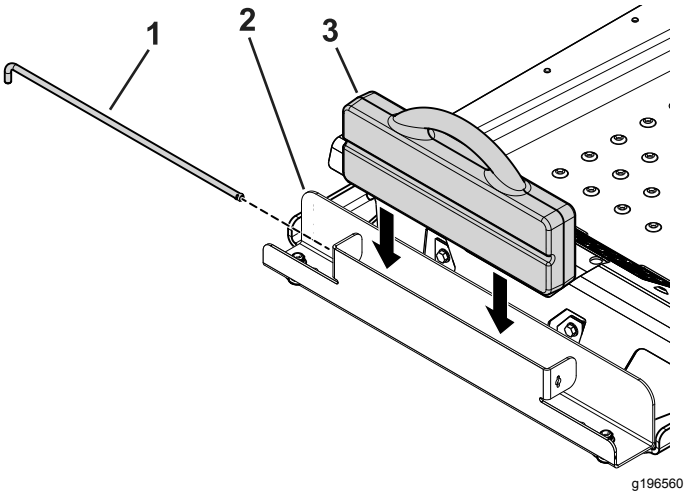

Figure 5

1. Retaining rod
2. Weight tray
3. Suitcase weight

5. Insert the retaining rod into the tray and rotate it into the locked position (Figure 5).

Important: **Remove the suitcase weight whenever you remove the bagger attachment.**

3

Installing the Attachment Mount

Parts needed for this procedure:

1	Stabilizer bracket
2	Carriage bolt (5/16 x 3/4 inch)
4	Locknut (5/16 inch)
2	Self-tapping screw (5/16 x 3/4 inch)
2	Bolt (5/16 x 1 inch)
1	Pivot frame
2	Hairpin cotter
2	Rod
2	Washer
1	Draw-bar decal

Procedure

1. Install the stabilizer bracket to the engine guard using 2 carriage bolts (5/16 x 3/4 inch) and 2 locknuts (5/16 inch) as shown in Figure 6.

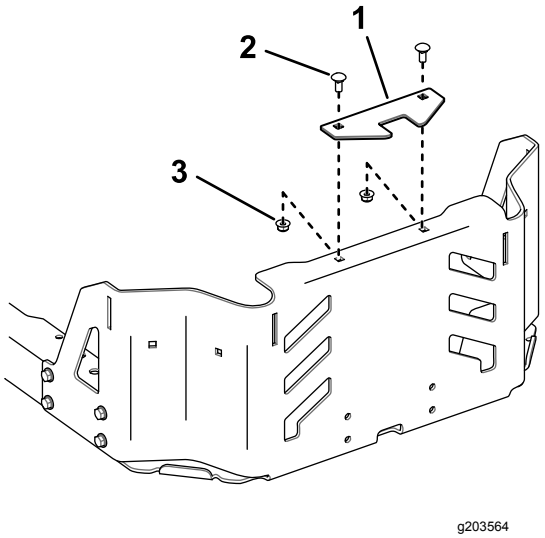

g203564

Figure 6

1. Stabilizer bracket
2. Carriage bolt (5/16 x 3/4 inch)
3. Locknut (5/16 inch)

2. Install the pivot frame to the machine frame as shown in Figure 7. Ensure that you push the pivot frame up until it is tight against the bottom of the engine guard. Loosely secure the pivot frame to the machine frame using 2 bolts (5/16 x 1 inch) and 2 locknuts (5/16 inch).

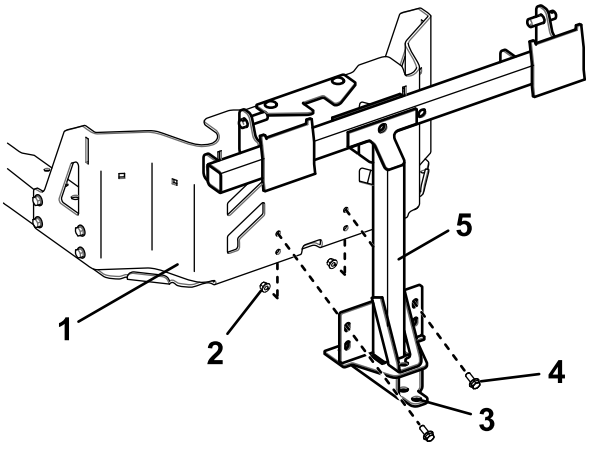

g203563

Figure 7

1. Machine frame
2. Locknut (5/16 inch)
3. Hole
4. Bolt (5/16 x 1 inch)
5. Pivot frame

3. Secure the pivot frame to the bottom of the machine frame using 2 self-tapping screws (5/16 x 3/4 inch) as shown in Figure 8.

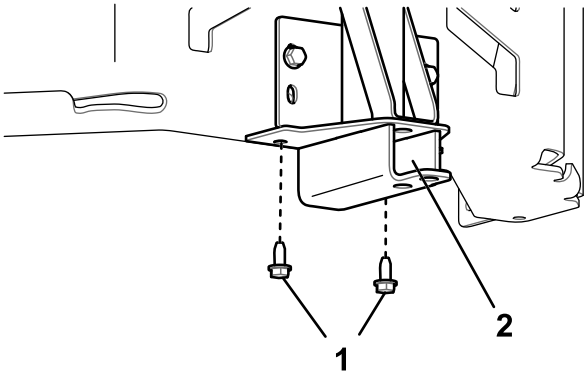

g203566

Figure 8

1. Self-tapping screw (5/16 x 3/4 inch)
2. Pivot frame

4. Tight the 2 bolts (5/16 x 1 inch) and 2 locknuts (5/16 inch) from step 2.
5. Attach the draw bar decal 1.3 cm (1/2 inch) to the left of the attachment mount (Figure 9).

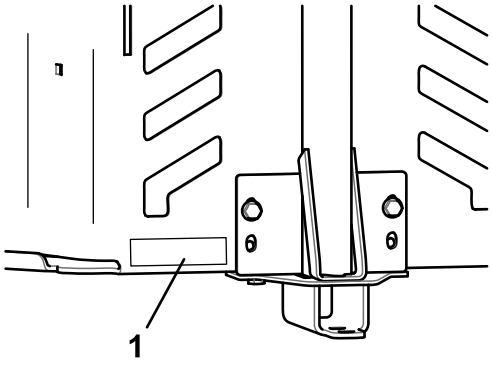

g203562

Figure 9

1. Draw bar decal

6. Install the bent, flared end of a rod into the keyed slot in the left side of the machine frame, and move the rod rearward to seat it in the frame (Figure 10).

   Note: Repeat this step for the right side of the machine.

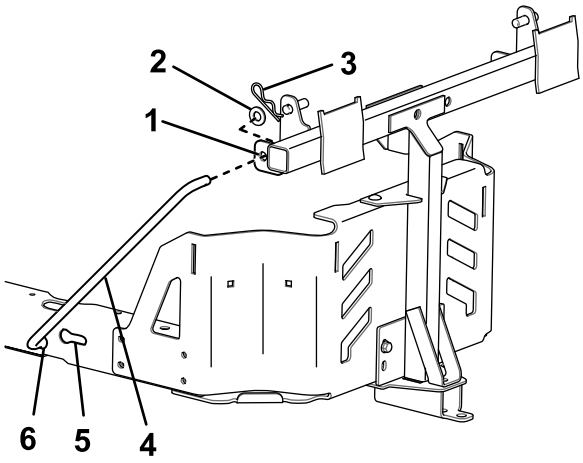

g203565

Figure 10
Left side shown

1. Pivot frame hole
2. Washer
3. Hairpin cotter
4. Support rod
5. Keyed slot (existing)
6. Bent, flared end of rod

7. Insert the bent ends of the rods into the attachment mount as shown in Figure 10 and secure the end of each rod with a washer and hairpin cotter.

4

Installing the Latch Rod

Parts needed for this procedure:

1	Latch rod
1	Hairpin cotter

Procedure

Install the latch rod with a hairpin cotter (Figure 11).

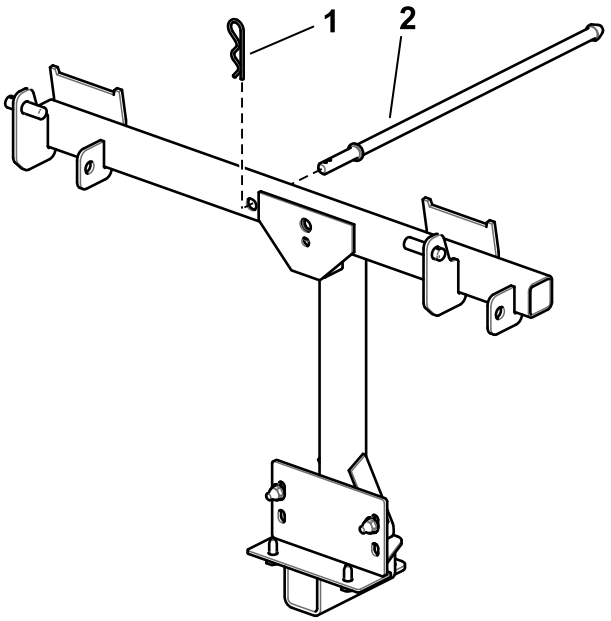

g202360

Figure 11

1. Hairpin cotter
2. Latch rod

5

Assembling the Bagger Top

Parts needed for this procedure:

1	Bagger top
1	Bagger screen

Procedure

1. Turn the bagger top over.
2. Install the screen as shown in Figure 12 and that it slopes down toward the collection bags.

Note: Make sure that the screens snap into place and the tabs engage the bagger top.

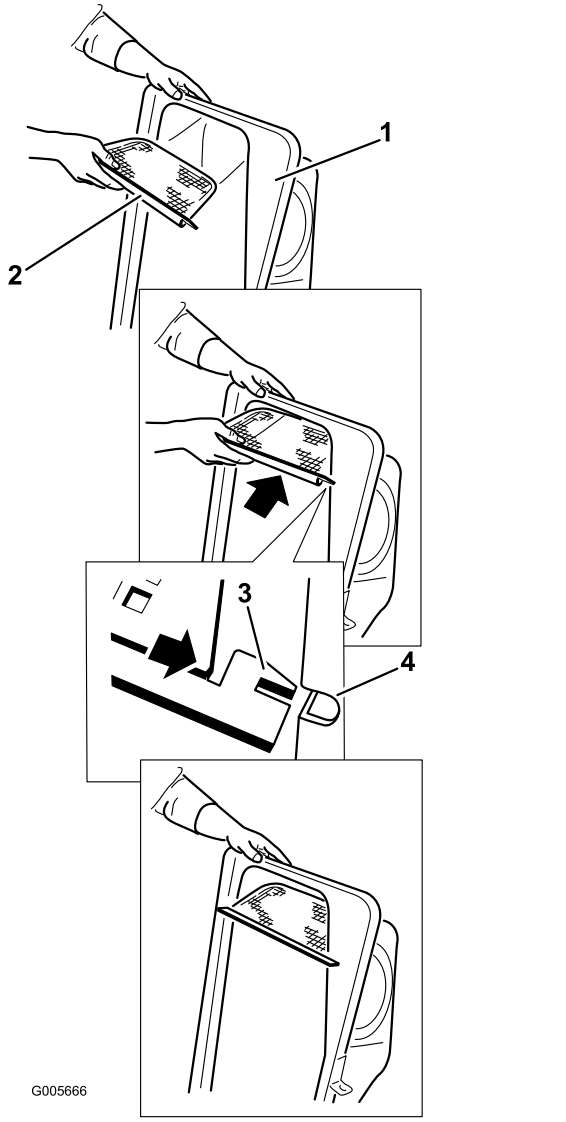

Figure 12

1. Bagger top
2. Screen
3. Screen tab
4. Slot in bagger top

6

Installing the Bagger Top

Parts needed for this procedure:

2	Grass Bag
1	Upper bagger tube

Procedure

1. Install the bagger top to the bagger frame.
2. Slide the brackets over the posts in the bagger frame and install the circular cotter pin into the hole in the right hand post (Figure 13).
3. Rotate the bagger hood down to the operating position.

   Note: To remove the circular cotter pin, continue to rotate it in the same direction as installed.

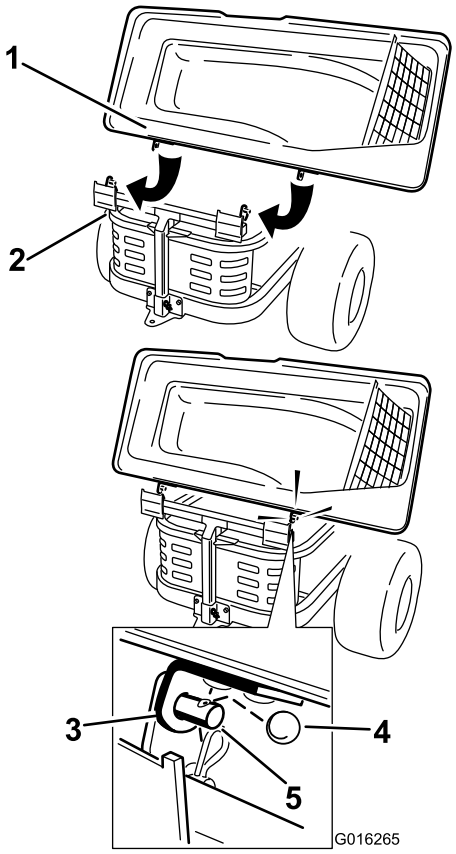

Figure 13

1. Bagger hood
2. Bagger frame
3. Bagger hood bracket
4. Circular cotter pin
5. Post

4. Lift the bagger top and install the bags by sliding the bag frame hooks onto the retaining brackets (Figure 14).

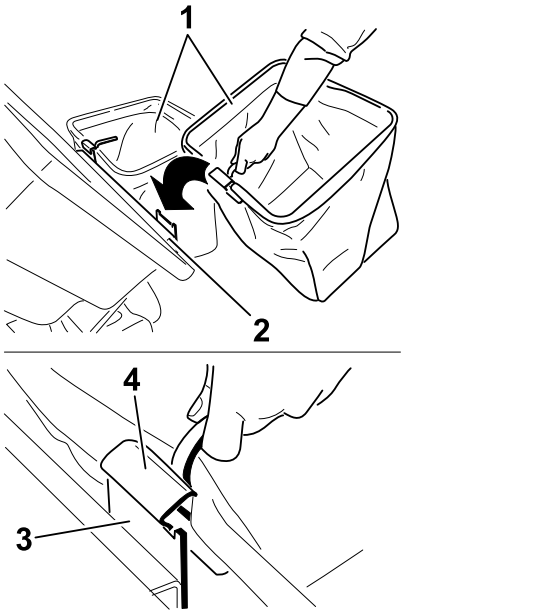

Figure 14

1. Bag
2. Bagger frame
3. Retaining bracket
4. Bag frame hook

5. Lower the bagger top onto the bags (Figure 15).

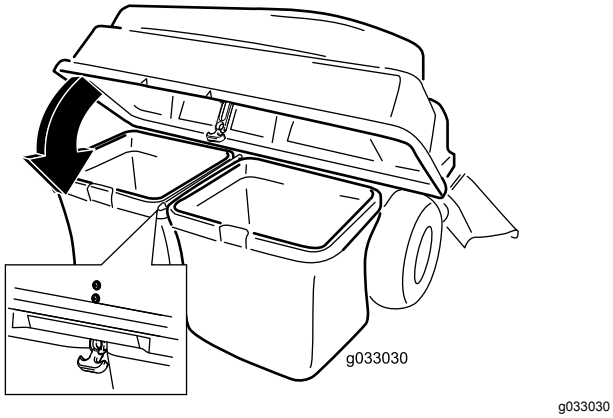

Figure 15

6. Secure the hood with the latch (Figure 15).
7. Install the upper bagger tube by inserting the curved end into the opening in the bagger top.

   Note: Make sure that the flared end with the retention post is pointing down and forward in preparation to be mated with the finishing kit.

7

Installing the High-Lift Blades

Parts needed for this procedure:

3	High-lift blade

Procedure

Refer to the *Operator's Manual* for the machine to remove the existing blades and install the high-lift blades.

8

Installing the Chute

Parts needed for this procedure:

1	Curved baffle
1	Locknut (5/16 inch)
1	Hand knob
1	Washer
1	Chute

Procedure

⚠ WARNING

An uncovered discharge opening could allow the lawn mower to throw objects toward you or bystanders, resulting in serious injury. Also, contact with the blade could occur.

Never operate the lawn mower unless you install a cover plate, a mulch plate, or a grass chute and catcher.

Never operate the mower with the discharge opening uncovered. Always use a discharge cover, mulch cover, or bagging chute when operating the mower deck.

1. Remove fasteners that secure the deflector assembly to the mower deck (Figure 16).

   Note: Retain all fasteners.

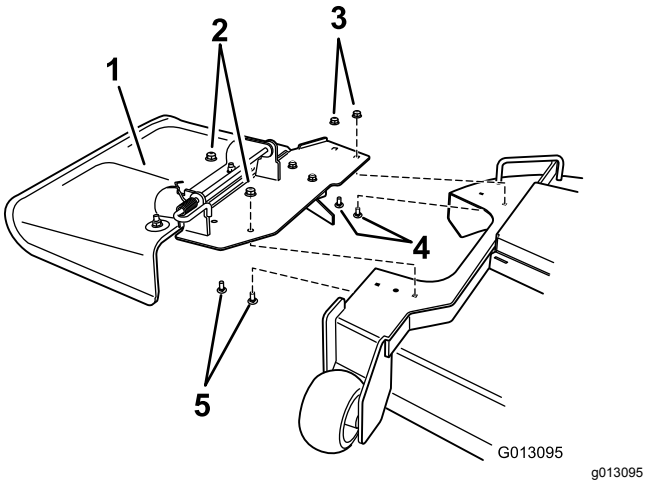

Figure 16

1. Deflector assembly
2. Locknut (existing; retain)
3. Locknut (existing; reuse)
4. Carriage bolt (existing; reuse)
5. Carriage bolt (existing; retain)

2. Remove the deflector assembly.

   Note: Retain all parts to convert the mower deck to side discharge.

3. Locate and install the angled cutoff baffle to the mower deck at the rear holes in the mower deck (Figure 17).

   Note: Use the existing fasteners from that location to secure the angled cutoff baffle to the mower deck.

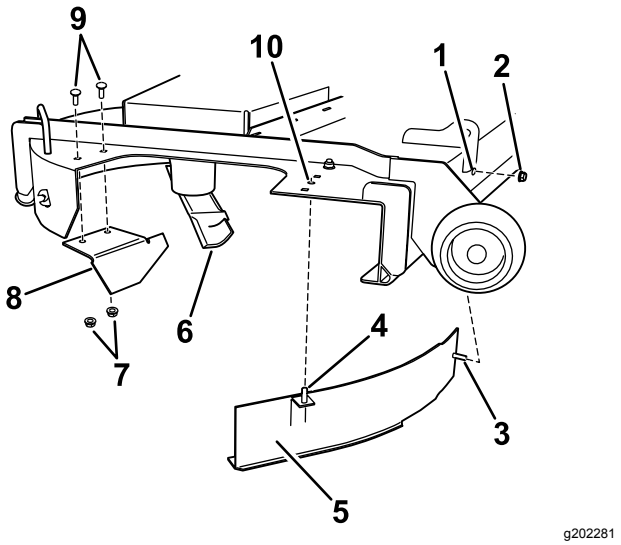

Figure 17

1. Hole in front wall of the mower deck
2. Locknut
3. Horizontal post, curved baffle
4. Vertical post, curved baffle
5. Curved baffle
6. High-lift blade
7. Locknut (existing; reuse)
8. Angled cutoff baffle
9. Carriage bolt (existing; reuse)
10. Center, forward hole in mower deck

4. Install the curved baffle to the mower deck (Figure 17).

   A. Align the vertical post in the curved baffle with center, forward hole in the mower deck and the horizontal post with the hole in the front wall of the mower deck.

   B. Secure horizontal post to the front wall of the mower deck using a locknut.

5. Install the chute to the mower deck.

   Note: Ensure that the opening in top of the chute aligns with the exposed post on the mower deck top and the forward vertical plate mates with the folded metal bracket of the chute (Figure 18).

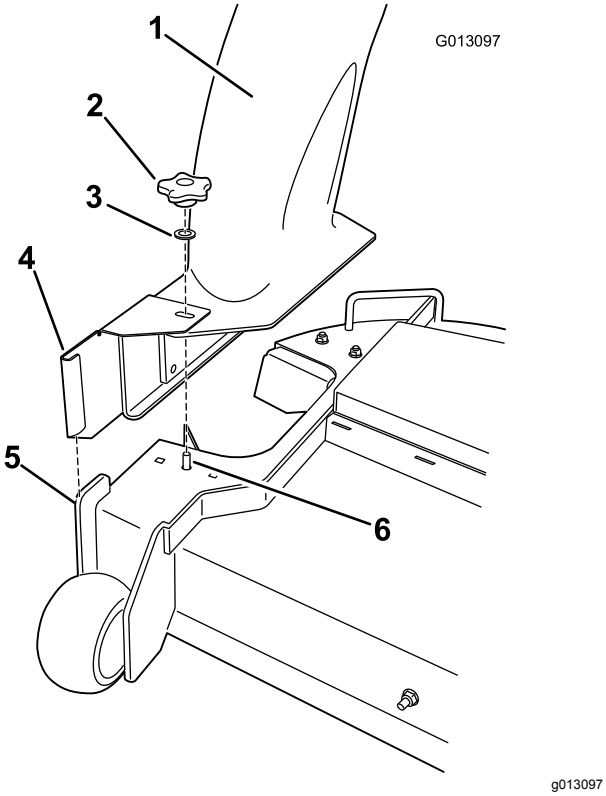

Figure 18

1. Discharge chute
2. Hand knob
3. Washer
4. Folded metal bracket (chute)
5. Forward vertical plate (deck)
6. Exposed post in the mower deck (curved baffle)

6. Install a washer and hand knob over the post coming through the chute top (Figure 18).
7. Hand tighten the knob to secure the chute to the mower deck.
8. Hook the flexible latch on the chute to the retaining clasp welded to the side wall of the mower deck (Figure 19).

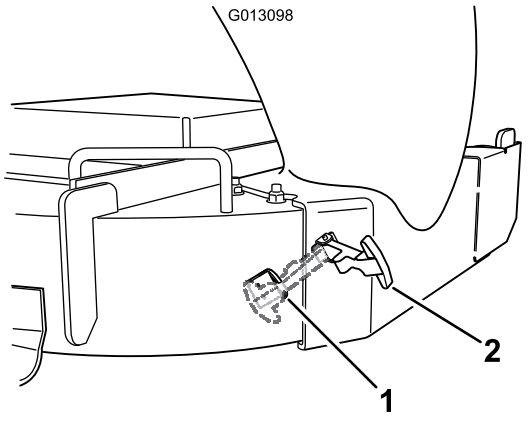

Figure 19

1. Retaining clasp
2. Flexible latch

9

Connecting with the Discharge Tube

Parts needed for this procedure:

1	Discharge tube

Procedure

1. Slide the curved end of the discharge tube into the opening in the bagger top (Figure 20).

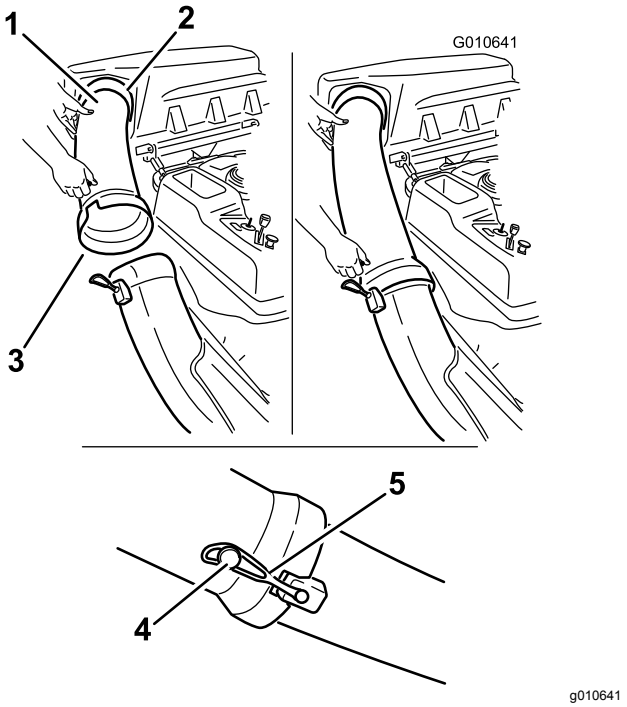

Figure 20

1. Discharge tube
2. Opening in bagger top
3. Flared end of discharge tube
4. Peg
5. Rubber strap

2. Slide the flared end of the discharge tube over the end of the chute. Move the rubber retaining strap on the chute snaps over the peg on the discharge tube to secure it (Figure 20).
3. Install the wire onto the spark plug(s).

Operation

Note: Determine the left and right sides of the machine from the normal operating position.

⚠ WARNING

To avoid personal injury, follow these procedures:

- **Become familiar with all operating and safety instructions in the *Operator's Manual* for the mower before using this attachment.**
- **Never remove the discharge tube, bags, bagger top, or the chute while the engine is running.**
- **Always shut the engine off and wait for all moving parts to stop before clearing an obstruction from the bagging system.**
- **Never perform maintenance or make repairs while the engine is running.**

Emptying the Grass Bags

Be careful when lifting or handling a grass bag that is full.

1. Park the machine on a level surface and disengage the blade-control switch.
2. Move the motion control levers outward to the NEUTRAL-LOCK position, shut off the engine, remove the key, engage the parking brake and wait for all moving parts to stop before leaving the operating position.
3. Open (raise) the bagger top (Figure 21).

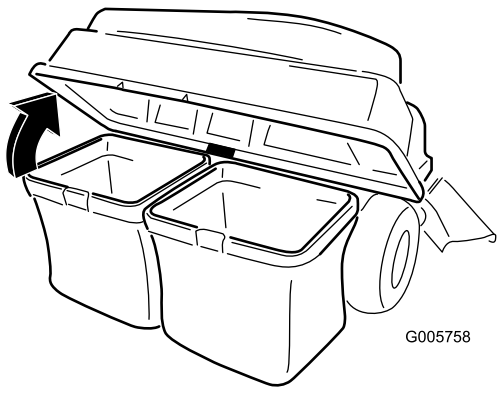

g005758

Figure 21

4. Compress debris into the bags. With both hands, lift up on the bag, unhook it from the retaining bracket, and empty the bag. Repeat this step for the other bag.
5. Install the bags by sliding the bag frame hooks onto the retaining brackets (Figure 22).

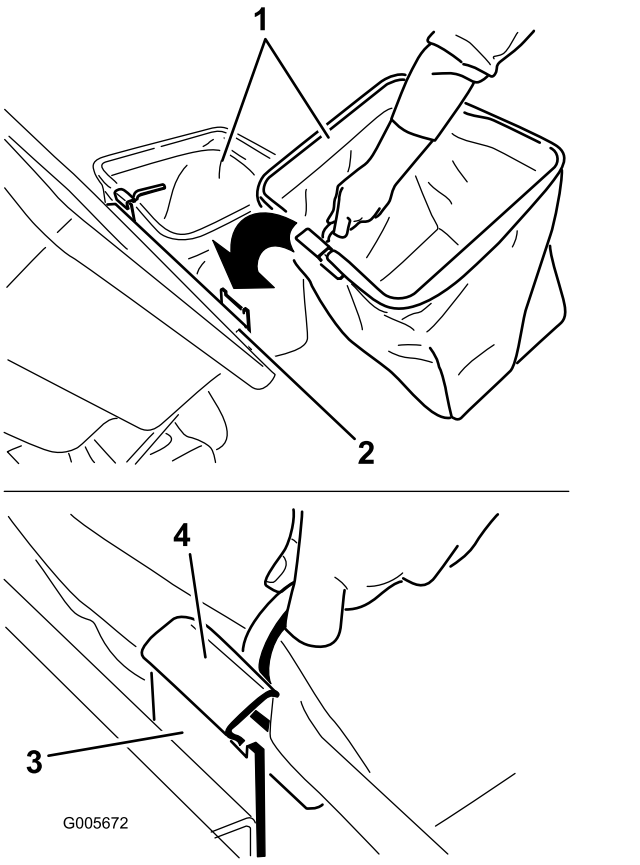

g005672

Figure 22

1. Bag
2. Bagger frame
3. Retaining bracket
4. Bag-frame hook

6. Lower the bagger top onto the bags.

Clearing Obstructions from the Bagger

1. Park the machine on a level surface and disengage the drives.
2. Engage the parking brake.
3. Shut off the engine and remove the key.
4. Wait for all moving parts to stop before leaving the operating position.
5. Check the grass bags and empty them if they are full.
6. Separate the discharge tube and chute.
7. Remove the discharge tube and chute from the bagger top and mower deck. Using a stick or similar object, carefully remove and clear the obstruction from the mower, discharge tube, chute, and the bagger top.

8. After you remove the obstruction, install the complete bagger system and resume operation.

Removing the Bagger

⚠ CAUTION

Failing to remove the front bagger weights and operating the machine without the bagger attachment may cause an unstable condition, which could result in a loss of control.

- **Always remove the front weights when removing the bagger attachment.**
- **Never operate the machine without the bagger attachment and the front weights installed.**

You can remove the bagger by repeating the Setup sections from all installed bagger related kits in reverse order. If weights are installed, always remove the front bagger weights when removing the bagger attachments.

Note: It is necessary only to remove the cutoff baffle when installing a mulching kit.

Using the Draw Bar

The bagger support bracket has a draw bar feature that you can use for towing.

- Read and understand all the operating instructions of the machine.
- When turning, slow down and observe the clearance.
- Make wide turns and keep towed equipment clear of the towing vehicle.
- The maximum draw bar pull is 36 kg (80 lb).
- Excessive draw bar pull may cause hydrostatic transmission failure.

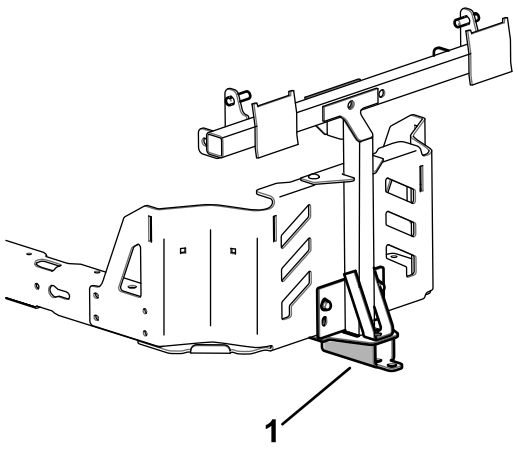

g203567

Figure 23

1. Bagger support bracket with draw bar

Operating Tips

Tips for Bagging

Remembering the Size of the Machine with the Attachment

Remember that the machine is longer and wider with this attachment installed. By turning too sharply in confined places, you may damage the attachment.

Trimming

Always trim with the left side of the mower. Do not trim with the right side of the mower because you could damage the bagger chute and discharge tube.

Cutting Height

Do not set the mower cutting height too low because long grass surrounding the mower can prevent air from getting under the mower and entering the bagging system. If enough air does not get under the mower, the bagging system will plug.

Cutting Frequency

Cut the grass often, especially when it grows rapidly. You will have to cut your grass twice if it gets excessively long.

Cutting Technique

For best lawn appearance, be sure to slightly overlap the mower into the previously cut area. This helps reduce the load on the engine and reduces the chance of plugging the chute and discharge tube.

Bagging Speed

Most often you will bag with the mower throttle in the FAST position and drive at a normal ground speed. However, in extremely dry and dusty grass, you may want to slightly reduce the throttle speed and increase the ground speed of the mower. The bagging system may plug if you drive too fast and the engine speed gets too slow. On hills, it may be necessary to slow the mower ground speed. This helps maintain the engine speed and bagging efficiency. Mow downhill whenever possible.

⚠ CAUTION

As the bagger fills, extra weight is added to the back of the machine. If you stop and start suddenly on hills, you may lose steering control or the machine may tip.

- **Do not start or stop suddenly when going uphill or downhill. Avoid uphill starts.**
- **If you do stop the machine when going uphill, disengage the blade control. Then back down the hill using a slow speed.**
- **Avoid sudden turns or rapid speed changes on slopes.**
- **Never operate the machine without the bagger attachment and the front weights installed.**

Bagging Long Grass

Excessively long grass is heavy and may not be propelled completely into the grass bags. If this happens, the discharge tube and chute may plug. To avoid plugging the bagging system, mow the grass at a high height of cut, then lower the mower to your normal cutting height and repeat the bagging process.

Bagging Wet Grass

Always try to cut grass when it is dry because your lawn will have a neat appearance. If you must cut wet grass, use the conventional side-discharge feature of the mower. Several hours later, when the clippings are dry, install the complete bagger attachment and vacuum up the grass clippings.

Signs of Plugging

As you are bagging, a small amount of grass clippings normally blow out the front of the mower. An excessive amount of clippings blowing out indicates that the bags are full or the system is plugged.

Maintenance

Note: Determine the left and right sides of the machine from the normal operating position.

⚠ CAUTION

If you leave the key in the ignition switch, someone could accidently start the engine and seriously injure you or other bystanders.

Remove the key from the ignition and disconnect the wire from the spark plug before you do any maintenance. Set the wire aside so that it does not accidentally contact the spark plug.

⚠ DANGER

Engines can become hot when they are operating. Severe burns can occur from contacting hot surfaces.

Allow engines, especially the muffler, to cool before touching.

⚠ DANGER

Leaves, grass, or brush can catch fire. A fire in the engine area can cause personal injury and property damage.

- **Keep the engine and muffler area free of debris accumulation.**
- **Take care when opening the bagger cover to keep debris from falling onto the engine and muffler area.**
- **Allow the machine to cool before storing it.**

Recommended Maintenance Schedule(s)

Maintenance Service Interval	Maintenance Procedure
After the first 10 hours	• Inspect the bagger.
Before each use or daily	• Clean the bagger.
Before storage	• Inspect the bagger. • Clean the bagger.

Inspecting the Bagger Attachment

Service Interval: After the first 10 hours

Before storage

1. Check the chute, discharge tube, and the bagger top. Replace these parts if they are cracked or broken.
2. Tighten all nuts, bolts, and screws.
3. Inspect all fasteners and latches; replace any missing or damaged.
4. Inspect the grass bags for deterioration.

⚠ WARNING

You or bystanders could be severely injured by flying debris or thrown objects that may pass through torn, worn, or deteriorated grass bags.

- **Check the grass bags for holes, rips, wear, and other deterioration.**
- **Do not wash the grass bags.**
- **If the bag has deteriorated, install new grass bags supplied by the manufacturer of this bagger attachment.**

Inspecting the Mower Blades

Inspect the mower blades regularly and whenever a blade strikes a foreign object.

If the blades are badly worn or damaged, install new blades. Refer to your mower or mower *Operator's Manual* for complete blade maintenance.

Cleaning the Bagger Attachment

Service Interval: Before each use or daily

Before storage

1. After each use, remove and wash the inside and outside of the bagger top, discharge tube, chute, and the underside of the mower, using water sprayed from a garden hose. Use a mild detergent to remove stubborn dirt.
2. Make sure that you remove matted grass from all parts.
3. Flush the grass bags with water using garden hose to remove any debris.
4. After washing, let all the parts dry thoroughly.

Storage

Storing the Bagger Attachment

Note: To prevent rapid deterioration of the bag material, store the bags where they will dry completely after each use.

1. Clean the bagger attachment; refer to Cleaning the Bagger Attachment (page 18).
2. Inspect the bagger attachment for damage; refer to Inspecting the Bagger Attachment (page 17).
3. Make sure that the grass bags are empty and thoroughly dry.
4. Store the bagger in a clean, dry place, out of direct sunlight. This protects the plastic parts and extends the life of the bagger. If you must store the bagger outside, cover it with a weatherproof cover.

Notes:

The Toro Warranty

Limited Warranty (see warranty periods below)

Conditions and Products Covered

The Toro Company and its affiliate, Toro Warranty Company, pursuant to an agreement between them, jointly promise to repair the Toro Products listed below if defective in materials or workmanship.

The following time periods apply from the original date of purchase:

Products	Warranty Period
TimeCutter Mowers • Engines[1] — Residential use	Residential Use[2] – 3 years Kawasaki – 3 years Kohler – 3 years Toro – 3 years
TimeCutter Mowers • Engines[1] — Commercial use	Commercial use 30 days Kawasaki – 3 years Kohler – 90 days Toro Single Cylinder – 90 days Toro Twin Cylinder – 3 years / 300 Hours[3]
TimeCutter HD Mowers • Engines[1] — Residential and Commercial Use	3 years or 300 Hours [3] 3 years or 300 Hours [3]
All Mowers	
• Attachments	1 year
• Battery	90 days Parts and Labor 1 year Parts only
• Belts and Tires	90 days

[1]Some engines used on Toro Products are warranted by the engine manufacturer.

[2]Residential use means use of the product on the same lot as your home. Use at more than one location is considered commercial use and the commercial use warranty would apply.

[3]Whichever occurs first.

Warranty may be denied if the hour meter is disconnected, altered, or shows signs of being tampered with.

Owner Responsibilities

You must maintain your Toro Product by following the maintenance procedures described in the *Operator's Manual*. Such routine maintenance, whether performed by a dealer or by you, is at your expense.

Instructions for Obtaining Warranty Service

If you think that your Toro Product contains a defect in materials or workmanship, follow this procedure:

1. Contact any Authorized Toro Service Dealer to arrange service at their dealership. To locate a dealer convenient to you, access our web site at www.Toro.com. You may also call the numbers listed in item #3 to use the 24-hour Toro Dealer locator system.
2. Bring the product and your proof of purchase (sales receipt) to the Service Dealer. The dealer will diagnose the problem and determine if it is covered under warranty.
3. If for any reason you are dissatisfied with the Service Dealer's analysis or with the assistance provided, contact us at:

   Toro Warranty Company
   Customer Care Department, RLC Division
   8111 Lyndale Avenue South
   Bloomington, MN 55420-1196
   Toll free at 866-216-6029 (U.S. customers)
   Toll free at 866-216-6030 (Canadian customers)

Items and Conditions Not Covered

There is no other express warranty except for special emission system coverage and engine warranty coverage on some products. This express warranty does not cover the following:

- Cost of regular maintenance service or parts, such as filters, fuel, lubricants, oil changes, spark plugs, air filters, blade sharpening or worn blades, cable/linkage adjustments, or brake and clutch adjustments
- Components failing due to normal wear
- Any product or part which has been altered, misused, neglected, requires replacement or repair due to accidents or lack of proper maintenance
- Pickup and delivery charges
- Repairs or attempted repairs by anyone other than an Authorized Toro Service Dealer
- Repairs necessary due to failure to follow recommended fuel procedure (consult *Operator's Manual* for more details)
  - Removing contaminants from the fuel system is not covered
  - Use of old fuel (more than one month old) or fuel which contains more than 10% ethanol or more that 15% MTBE
  - Failure to drain the fuel system prior to any period of non-use over one month

General Conditions

All repairs covered by these warranties must be performed by an Authorized Toro Service Dealer using Toro approved replacement parts.

Neither The Toro Company nor Toro Warranty Company is liable for indirect, incidental or consequential damages in connection with the use of the Toro Products covered by this warranty, including any cost or expense of providing substitute equipment or service during reasonable periods of malfunction or non-use pending completion of repairs under this warranty.

All implied warranties of merchantability (that the product is fit for ordinary use) and fitness for use (that the product is fit for a particular purpose) are limited to the duration of the express warranty.

Some states do not allow exclusions of incidental or consequential damages, or limitations on how long an implied warranty lasts, so the above exclusions and limitations may not apply to you.

This warranty gives you specific legal rights, and you may also have other rights which vary from state to state.

Countries Other than the United States or Canada

This warranty is not valid in Mexico. Customers who have purchased Toro products outside the United States or Canada should contact their Toro Distributor (Dealer) to obtain guarantee policies for your country, province, or state. If for any reason you are dissatisfied with your Distributor's service or have difficulty obtaining guarantee information, contact the Toro importer. If all other remedies fail, you may contact us at Toro Warranty Company.

Australian Consumer Law: Australian customers will find details relating to the Australian Consumer Law either inside the box or at your local Toro Dealer.