Wiring Explanation for lighting components with added features DRL, LED Strip, Halo's, etc

Most vehicles come originally equipped with a low beam and high beam headlight bulb or bulbs, a parking or running light and a turn signal. You have purchased an item that has an added lighting feature. As the lighting feature was not original on your vehicle the wiring, fuse, plug or switch to control that feature does not exist on your vehicle. In this case some automotive electrical engineering is required to make this lighting feature function.

You will notice on the back side of this type of light there are loose wires. These are the wires used to control the new lighting feature. They typically come in one of the two color combinations shown below.

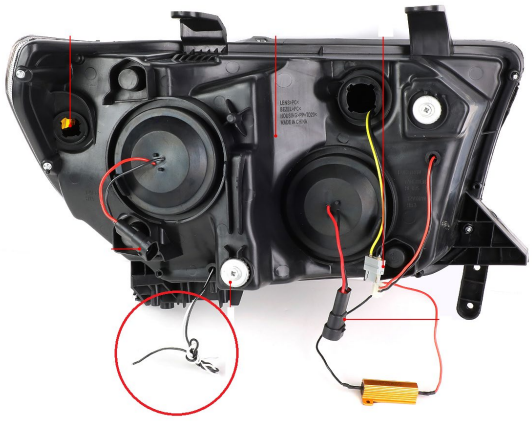	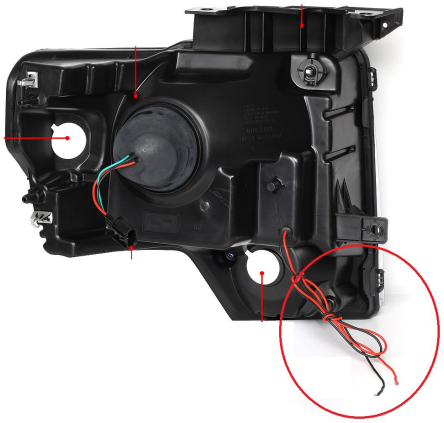
White/Black	Red/Black
White wire requires 12 volt switched power Black wire requires chassis ground	Red wire requires 12 volt switched power Black wire requires chassis ground

Now that you have identified the wires if you would like you can test that the lighting feature is working properly by touching the ends of the wires to your vehicle's battery. Black wires go to the negative (-) battery terminal and the colored wire would go to the positive (+) terminal.

Once you have verified that the light feature operates correctly you would now determine how you wish for the lighting feature to function. These are the three common ways our customers have these features function:

1. Feature comes on at night when the lights are turned on.
    a. Typically, this is done by sourcing the 12v power from the vehicles existing parking light circuit.
2. Feature comes on when the vehicle is turned on, day or night.
    a. This would require 12v key on switched power.
3. Independent control of the lighting feature, turn on and off the feature at any time.
    a. Create a new circuit with a switch inside the vehicle, similar to adding fog light.

If you do not posses the correct tools or expertise to perform the required wiring listed above, we strongly recommend taking your vehicle to an automotive wiring specialist to perform the installation for you.

Failure to do so could result in you damaging your vehicles existing wiring systems.