

FOTILE

A BREATH OF FRESH ENGINEERING®

Dishwasher

BD2B-G2-Y

Instruction for Use and Maintenance ENGLISH/ESPAÑOL/FRANÇAIS/中文

111800050554A

Dear user,

Thank you for choosing FOTILE products made precisely for your kitchen needs. Before use and installation, we kindly ask you to thoroughly read this Instruction and comply with the requirements. This is essential for the optimal functionality of the product and ensuring a satisfactory cooking experience.
We recommend that you contact our FOTILE service center whenever you need services including repairs so that we can provide prompt assistance.

FOTILE kitchen appliances, a happy choice for kitchens worldwide!

Contents

I. SAFETY PRECAUTIONS ---------- 2

II. PRODUCT INFORMATION ---------- 7

III. OPERATION INSTRUCTIONS ---------- 10

IV. INTRODUCTION TO WASH CYCLE OPERATION ---------- 15

V. CLEANING MAINTENANCE AND SERVICING ---------- 17

VI. IDENTIFICATION AND HANDLING OF COMMON FAULTS ---------- 18

I. Safety Precautions

■ Important safety instructions

⚠ Warning - When using the dishwasher, please follow the basic precautions outlined below:

a) Read all instructions before using the dishwasher.

b) Use the dishwasher only for its intended purpose.

c) Use only recommended detergents or wetting agents in the dishwasher, and keep them out of the reach of children.

d) When loading items for cleaning:

1) Place sharp items with care to minimize the risk of damaging the door seal;

2) Place sharp-edged knives with handles pointing upward to reduce the risk of cuts.

e) Do not wash plastic items unless they bear a "dishwasher safe" sign or any equivalents. For plastic items without these signs, consult the manufacturer for recommendations.

Note:For appliances using heating elements, this statement may be omitted if the heating element is positioned or protected to prevent melted plastic items from coming into contact with it.

f) Avoid immediate contact with the heating element during or after use.

g) Do not operate your dishwasher unless all enclosure panels are properly in place.

h) Do not tamper with the controls.

i) Do not abuse, sit on, or stand on the door or dish rack of the dishwasher.

j) To mitigate the risk of injury, do not allow children to play in or on the dishwasher.

k) Under certain conditions, hydrogen gas may be generated in a hot water system that has not been used for two weeks or longer. Hydrogen gas is explosive. Before using the dishwasher, if the hot water system has not been used for a period of time, open all hot water taps and let the water flow from each for several minutes. This will release any accumulated hydrogen gas. As the gas is flammable, do not smoke or use an open flame during this time.

l) When an old dishwasher is no longer in use or is discarded, remove its door.

■ Classification by the degree of harm and damage

⚠ **Danger**	Ignoring this sign and performing incorrect operations are likely to cause personal danger, severe injuries, or fire.
⚠ **Warning**	Ignoring this sign and performing incorrect operations may result in personal danger, severe injuries, or fire.
⚠ **Caution**	Ignoring this sign and performing incorrect operations may lead to personal injuries or damage to items.
Recommen-dation	Information provided for safe and proper usage.

■ Caution and prohibition signs



***Special note: Please operate the product in strict accordance with this instruction. The Company will not be liable for any property loss or personal injury caused by improper use of this product.**

Grounding instructions

This product must be grounded. In the event of a fault or failure, grounding will reduce the risk of electric shock by providing a path of least resistance for electric current. This product is equipped with a power cable that includes a grounding conductor and a grounding plug. The plug must be plugged into an appropriate socket that is installed and grounded in accordance with all local codes and regulations.

WARNING - Improper connection of the equipment-grounding conductor can result in an electric shock. Check with a qualified electrician or repair man if you doubt whether this product is properly grounded. Do not modify the plug provided with the product. If the plug does not match the socket, have a qualified electrician install a suitable one.

⚠ Danger

Prohibited	Do not wet electrical components such as power plugs and connectors. Wetting them may lead to electric shocks or other accidental injuries.	Prohibited	It is prohibited to restructure, stretch, buckle or squeeze the power cable with heavy objects. Otherwise, the power cable may be damaged, causing accidents such as electric shocks and fire.
Prohibited	Please do not allow children to use the product alone or approach the bottom, as it may cause electric shock or other accidental injury.	Do not operate with wet hands	Please do not touch the power plug or electrical components with wet hands, as it may lead to electric shock.
Caution, electric shock!	Before installation and repair, the power must be cut off to avoid electric shocks.	Prohibited	It is prohibited to use alcohol and other flammable solvents to clean the liner.
Follow strictly	When moving or disassembling the product, pay attention to the corners of the dishwasher, and take proper precautions to avoid cuts.	Caution, hot!	Please pay attention to safety when opening the door during the operation of the dishwasher. Hot water may spill and cause scalds.
Grounding required	The socket must be equipped with a reliable grounding wire for safety. Do not connect the grounding wire to any gas pipe, water pipe, lightning rod or telephone wire. Poor grounding may cause electric shocks and other accidents.		

⚠ Warning

Prohibited Do not use any loose or poorly connected power socket. Otherwise, electric shocks, short circuit or fire may occur.	Disassembly prohibited Non-professionals shall not dismantle the dishwasher to repair or replace parts without authorization.
Prohibited The dishwasher should only be shortly opened when the tableware is placed or taken out to prevent injuries due to tripping.	Prohibited Do not put dishwashing liquid or foaming detergent in when washing tableware.
Prohibited Do not put the cutting edge of the knife in direct contact with the bowl basket.	Prohibited Do not keep the door open at all times when the dishwasher is not in use, as it may risk overturning the appliance.
Prohibited Do not sit or stand on the dishwasher door when it's open.	Prohibited Do not pour water directly into the dishwasher as it may cause the product to malfunction.
Prohibited Do not clean the glass with an abrasive cleaner or a sharp metal scraper as it will scratch the glass surface and lead to breakage.	Follow strictly In case of any fault, power off the dishwasher immediately and stop using it, and handle it according to "Common Fault Identification and Handling".
Follow strictly Please power off the dishwasher before regular cleaning and maintenance.	Follow strictly In the case of water leak from the product, please stop using it and contact the manufacturer immediately.
Caution, hot! Do not touch the heating device while the product is running, which may cause scalds.	Follow strictly Knives and other sharp utensils must be placed in the dish rack with the point facing down, or they must be put horizontally.
Follow strictly Children and people with limited mobility are not allowed to use the product. Especially, keep the product out of the reach of children. Otherwise, it may cause scalds, electric shocks and other accidental injuries.	Follow strictly Do not allow children to play with the plastic film and packing case to avoid suffocation. Keep the packing materials away from children. They are not toys.

⚠ Warning

Follow strictly To mitigate the risk of electric shocks, fire, or personal injuries, the installer must ensure that the dishwasher is completely enclosed at the time of installation.	Follow strictly After installation of the dishwasher, if the power plug is not easily accessible, it should be connected to a fixed wiring switch in compliance with the wiring regulations to cut off power through such a switch in case of repair or an emergency.
Follow strictly After the operation of the dishwasher, hot air is ejected from the opened door. People should stand a little farther away from the door so as not to be scalded by the hot air.	Follow strictly The appliance should be connected to the water source with a new hose assembly while the old one should not be reused.

⚠ Caution

Follow strictly The product will get hot during use. Please avoid contacting the heating components and areas around them.	Prohibited Do not use any multifunctional socket for multiple plugs.
Follow strictly Keep the dishwasher away from heat sources, gas, alcohol, and other inflammable products.	Follow strictly Ensure that the sewer line is unimpeded, and a blockage in the line may cause the product to malfunction.
Follow strictly The presence of a small amount of water in the liner when unpacking, is due to the factory's conformity test, it is not a fault of the dishwasher itself.	Follow strictly Please keep children away from detergents and rinse aids. These detergents may cause burns to the mouth, throat, and eyes or lead to choking.
Follow strictly Please keep children away from the dishwasher with the door opened. There may be small parts in the dishwasher that are likely to be swallowed by children, and the water in the dishwasher is not potable as it may contain residual detergent.	Follow strictly Try not to leave large residues (such as bones) in the tableware to be cleaned to prevent interference with the rotation of the spray arms and impacts to the normal operation of the dishwasher and cleaning effectiveness.

⚠ Caution

Follow strictly — Do not place articles to be cleaned with a large amount of sediment in the product as it may cause the product to malfunction.	Follow strictly — Do not install the dishwasher where it may freeze (below 0℃).
Follow strictly — Ensure the dish rack is in place when the dishwasher is working.	Prohibited — It is prohibited to pull or disassemble the connecting wire at the top of the dishwasher.
Follow strictly — The damaged power cable must be replaced by a professional technician from the manufacturer, the repair department or the like to avoid danger.	

Recommendation

Follow strictly — After each washing, please clean up the food residue in the residue basket in time.	Prohibited — When placing tableware, prevent fragile objects such as goblets from coming in contact with other tableware.
Follow strictly — Before washing tableware, it is recommended to add special dishwasher powder.	Follow strictly — Please pre-clean the tableware and dispose of large food residues before putting it in the dishwasher for washing.
Follow strictly — If the tableware has stains that are difficult to clean by hand or even a stainless steel scrubber, they cannot be cleaned if the tableware is put into the dishwasher directly. It is recommended to pretreat the stains and then put the tableware into the dishwasher for cleaning.	

Caution: This product may let you expose to chemicals known to the State of California to cause cancer and birth defects or other reproductive harm. For more information, please visit: www.P65Warnings.ca.gov.

II. Product Information

■ Names of components

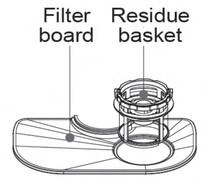

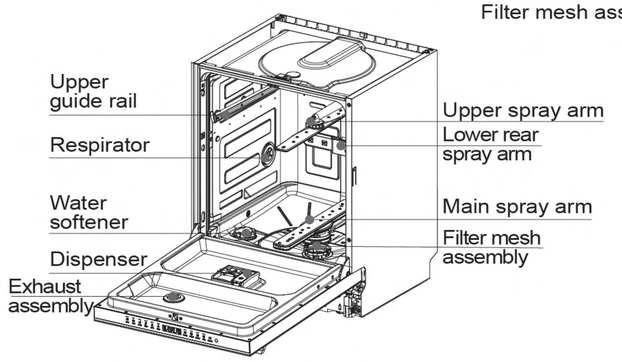

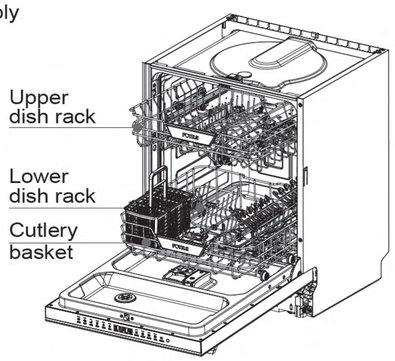

■ Main technical parameters

Model			BD2B-G2-Y
Certification			ETL, DOE, TSCA
Dimensions	Product Dimensions	Width	23 9/16"(598mm)
		Depth Excluding Handle	22 1/2"(570mm)
		Depth Including Handle	24 1/8"(611.5mm)
		Depth with 90° Door Open	44 1/8"(1120mm)
		Height(adjustable)	33 7/8 - 35 1/16"(860-890mm)
	Cutout Dimensions	Width	≥23 5/8"(600mm)
		Depth	≥22 11/16"(575mm)
		Height	34 1/16-35 1/4"(865-895mm)
	Weight (lbs/kg)	Net weight	92.4lbs(41.9kg)
		Gross Weight	107.8lbs(48.9kg)
Technical Specifications		Voltage	120V
		Frequency	60Hz
		Watts	1500 W
		Power cord	5ft with plug
		Water Pressure	20.3-145psi/0.14-1MPa
		Water Usage – Normal Cycle	3.4 Gallons
		Energy Usage	285 kWh/year
		Sound level	56 dBA

Design Details	Racks	Third Rack	NO
		Number of Racks	2
	Material	Door	Frosted tempered glass
		Handle Material	Aluminum
		Tub Material	Stainless steel
	Controls		Top control,Touchpads
	Handle Type		Bar handle
	Number of spray arms		4
	Number of Place Settings		12 sets
	Adjustable Tines		Yes
	Adjustable Racks		No
	Detergent and Rinse-Aid Dispenser		Yes
Functions & Features	Washing Cycles		Glass, Quick, Normal, Intensive, ECO, Auto
	Highest Washing Temperature(℉)		75℃/167°F
	Options	Storage	Yes. Keep tableware clean and dry for up to 96 hours.
		Self clean	Yes
		Extra Dry	Yes
		Half Load Wash	Yes
	Fingerprint Resistant Finish		Yes
	Inverter Direct Drive Motor		Yes
	Concealed heater		Yes
	Soil sensor		Yes
	Fan-assisted drying system		Yes
	Leak detection		Yes
	End of cycle buzz		Yes
	Interior lighting		Yes
	Cycle light		Yes
	HydroJet™ technology		Yes
	Purification and drainage system Pur-Drainage™ System		Yes Free of any foul water and stink

Control panel



Function description

Glass	Glass Cycle, a dedicated cycle for fine tableware and glassware.
Quick	Quick Cycle, for cleaning slightly soiled tableware such as breakfast plates and preparation dishes.
Normal	Normal Cycle, 70℃/158°FFor powerful and fast cleaning of oily dishes and cookware at 70℃. This program is recommended for daily, regular, or typical use to completely wash a full load of normally soiled dishes
Intensive	Intensive Cycle, 75℃/167°F For powerful and fast cleaning of heavily oily dishes and cookware at a high temperature .
ECO	ECO Cycle, for low-pow-er-consumption, slow cleaning with less water and electricity .
Auto	Auto Cycle, for automati-cally sensing the degree of fouling of tableware to achieve the desired cleaning effectiveness .
Storage	Storage Cycle, for keeping tableware clean and dry for a period of time after cleaning.
Self-Clean	Self-Clean Cycle, for cleaning the cavity of the dishwasher.
Extra Dry	Extra Dry Cycle, for extending the drying time to achieve better drying effectiveness.
Half Load	Half Load Cycle, for quickly cleaning the tableware in the lower dish rack.
	Softener Salt light, when this light is on, you need to add dishwasher softener salt.
	Rinse Aid light, when this light is on, you need to add a rinse aid.
	Power button, for turning on or off the power.
Start/Pause	Start/Pause button, for start or pause this product.

Note:1. The Start/Pause button ▷‖ is designed only to start this product. If you need to pause it, just open the door. Be cautious of potential hot water splashes when opening the door.

2. The Half Load function is only used to wash the tableware on the lower dish rack. If there is dirty tableware on the upper dish rack, this function is not recommended.

III.Operation Instructions

■ Initial setup

● You can first consult the local water utility company to confirm the water hardness of your area, and then refer to the table below to determine the softening grade that needs to be set for the dishwasher.

°dH	°fH	°eH	mmol/L	gr/gal	Recommended setting
0-6.2	0-11	0-7.7	0-1.1	0-6.4	H0
6.2-8.4	11~15	7.7-10.5	1.1-1.5	6.4-8.8	H1
8.4-11.2	15-20	10.5-14	1.5-2.0	8.8-11.7	H2
11.2-14	20-25	14-17.6	2.0-2.5	11.7-14.6	H3
14-16.8	25-30	17.6-21.1	2.5-3.0	14.6-17.5	H4
16.8-22.4	30-40	21.1-28.1	3.0-4.0	17.5-23.4	H5
22.4-28.1	40-50	28.1-35.1	4.0-5.0	23.4-29.2	H6
≥28.1	≥50	≥35.1	≥5.0	≥29.2	H7

● Set the softening system

1. Press and hold the Start/Pause button for 5 seconds while the dishwasher is connected to the power supply in off state, and the display screen will show the factory preset value;
2. Continue to press the Start/Pause button, and the set value will increment by one level. After reaching H7, it will return to H0; (A higher value indicates a more robust softening capacity, which is suitable for water with higher hardness but consumes more salt.)
3. Press and hold the Power button to turn off the dishwasher or leave it be for 5 seconds without any interaction. The dishwasher will then store the current set value.



● Add softener salt (please use dishwasher softener salt)

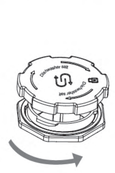

Unscrew the water softener cover

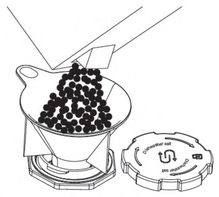

Fill with 500g softener salt (it is prohibited to fill with detergent!)

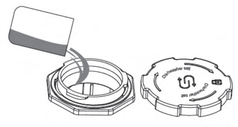

Fill the softener salt compartment with water, and stir it thoroughly. Handle with care to minimize the risk of saltwater spillage.

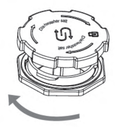

Screw the water softener cover tight once the addition is complete.

Note: 1. After adding softener salt, it is recommended to run a Self-Clean Cycle to prevent saltwater overflow from corroding the liner.
2. The dishwasher softener salt takes some time to dissolve in water. After softener salt is added, the Low Salt light may not immediately go out, but this does not affect the normal operation of the dishwasher.
3. Pour water into the softener salt compartment only during the initial softener salt addition.

● Set the amount of rinse aid

1. When the dishwasher is connected to the power supply in off state, press and hold the Storage button for 5 seconds, and the screen will display the factory preset values;
2. Continue to press the Storage button, and the set value will increment by one level. After reaching 6, it will return to 0; (A higher numerical value signifies a greater amount of rinse aid dispensed each time, leading to faster consumption and enhanced drying effectiveness.)
3. Press and hold the Power button to turn off the dishwasher or leave it be for 5 seconds without any interaction. The dishwasher will then store the current set value.



■ Dispense rinse aid and dishwasher powder.

Refer to the actual product for the dispenser type.

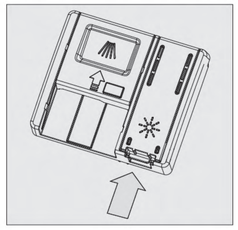

Open the cover of the rinse aid cavity

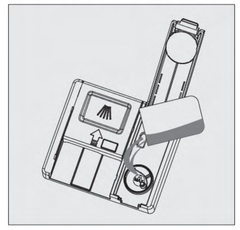

Fill up with the rinse aid

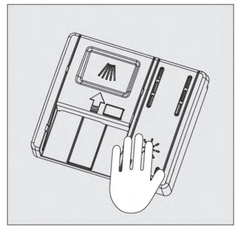

Close the cover, and you will hear a click sound

Note: After rinse aid is added, if there is an overflow, please run a Quick Cycle.

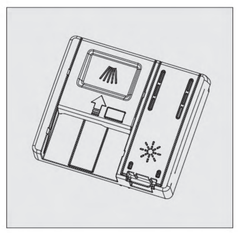

Press the orange button to open the cover

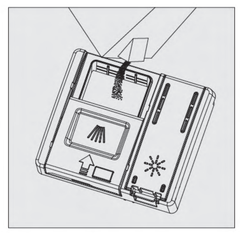

Pour the dishwasher powder or place the dishwasher tablet into the dry detergent compartment.

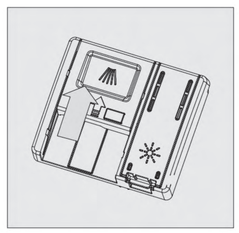

Push in the cover and press firmly to secure.

■ Illustration of dish rack arrangement

● Daily tableware arrangement

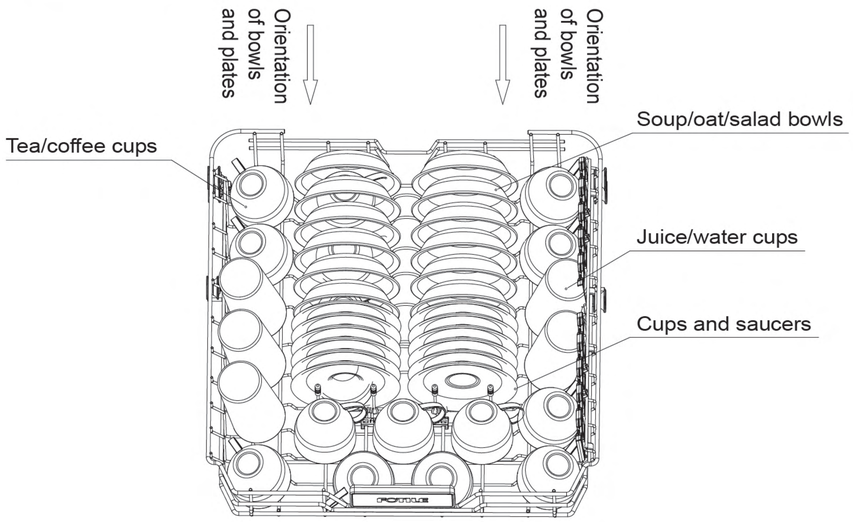

Upper dish rack

Arrangement instructions and precautions:

1. Before washing, please pretreat the tableware to remove large residues;
2. Do not place the dishes with their openings facing upward, as it may affect the normal operation and washing effectiveness of the dishwasher;
3. For heavily soiled utensils, it is recommended to place them on the lower dish rack as it may effectively improve the cleaning effectiveness;
4. After placing the tableware, avoid stacking them together to prevent any impact on the cleaning effectiveness; if there are only a few dishes, place them with certain space in between to enhance the cleaning process.
5. After placing the dishes, please ensure that the spoons, cutlery, etc. will not affect the rotation of the upper and lower spray arms;
6. When placing the dishes, please pay attention to the direction in which they are arranged to achieve better washing effectiveness.

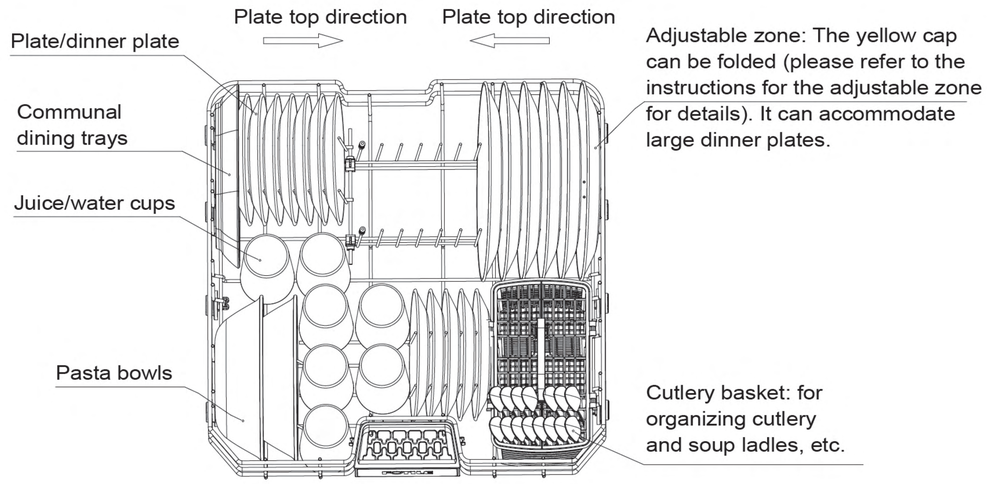

Lower dish rack

● Adjustable zone instructions

Adjustable zone on the upper dish rack: flip down the middle support, then you can put in mugs, glass cups, dessert bowls, etc.

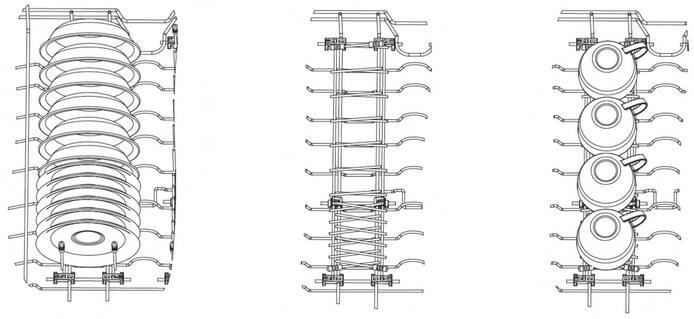

Adjustable zone on the upper dish rack: flip down the cup holder on the right, then you can put in red wine glasses.

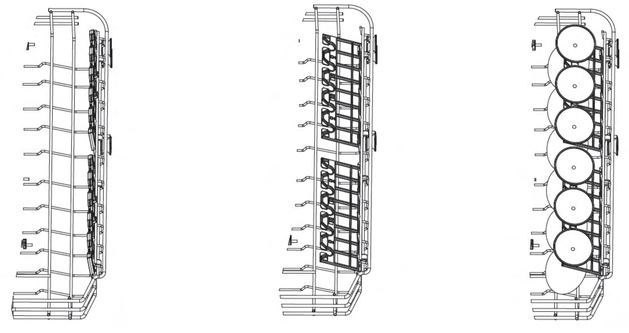

Adjustable zone on the lower dish rack: flip down the middle support, then you can put in large utensils such as cookware.

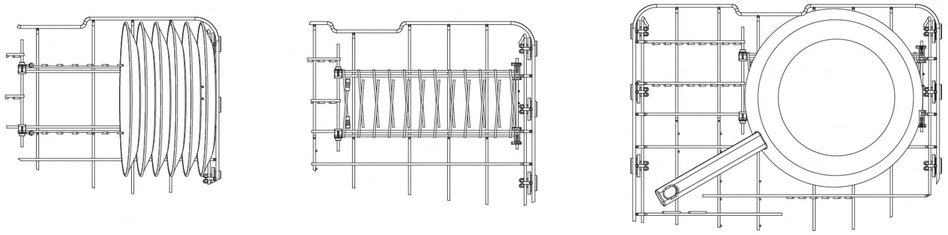

● Test tableware arrangement

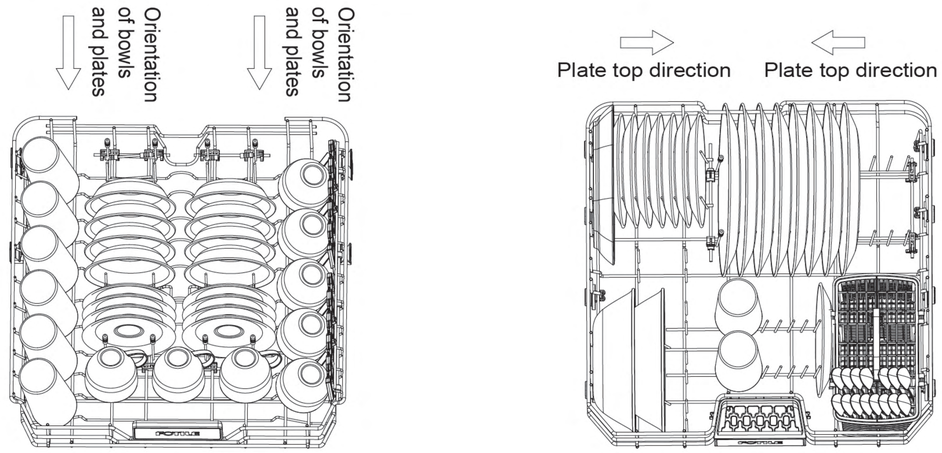

Upper dish rack **Lower dish rack**

Pay attention to the type of tableware

Tableware and materials	Washable or not	Tableware and materials	Washable or not
Aluminum	No	Stainless steel	Yes
Bottles and cans	Yes. Make sure that they do not bear any labels as labels may fall off and clog the spray arms.	Fine silver	Yes
Cast iron	No. It may rust.	Tin	No. It may be corroded and become rusty.
Ceramic	Yes, except for bone china and utensils with easily detached surface patterns	Wood and ivory	No. Untreated wood is prone to warping and cracking.
Crystal	Yes		
Gold	No. It will discolor.	Hollow handle cutlery	No. The adhesive in the cutlery may get loose when being exposed to hot water.
Glass	Yes		
Plastic	Yes. Please ensure that plastic products meet the temperature requirements for machine washing.	Copper, bronze	No. It will deform and discolor under the action of hot water and detergent.

Note: Please ensure that the tableware to be cleaned can withstand the temperature difference within the specified temperature range of wash cycles;

IV.Introduction to Wash Cycle Operation

■ Description of operating steps

1. Open the dishwasher door, put in dishwasher powder or dishwasher tablets, press the power button ⏻ , and turn on the dishwasher;
2. Click the desired cycle button, such as Normal ;
3. If needed, click the corresponding additional function button to select an additional cycle (e.g., Extra Dry);
4. Click Start/Pause ▷‖ . Close the dishwasher door within 4 seconds, initiate the wash cycle, and the front light 'O' will dime and illuminate slowly.
5. If you click Start/Pause and fail to close the door within 4 seconds, click Start/Pause again and close the dishwasher door within 4 seconds to start the wash cycle.



Note: 1. During cleaning, if you need to add utensils, just open the door and the dishwasher will automatically pause for the addition of utensils. Now be aware of hot water splashes. If you take more than 4 seconds to put in the utensils, press the Start/Pause button and close the door within 4 seconds. You will hear a short beep, and the dishwasher will continue working.

2. Once the cleaning has commenced, if you wish to switch to another wash cycle, press and hold the Power button to turn off the dishwasher. You can then restart it and choose a different cycle.
3. After the cleaning has started, please refrain from intentionally switching to another wash cycle because the added detergent has already been consumed. If you switch to another wash cycle, you have to add detergent again.

■ Cycle description

1. Quick , Glass , Normal , Intensive , ECO , and Auto are main cycles. Extra Dry , Storage , and Half Load are additional cycles, while Self-Clean is a value-added cycle. It is recommended to use dishwasher tablets in the Self-Clean Cycle for better cleaning effectiveness.
2. ECO can only be used with the Storage function.
3. Click on Half Load to quickly wash the dishes on the lower dish rack.

4. Storage : If you wish to run the Storage function after the cleaning cycle, click Storage after selecting the main cycle. Press the Start/Pause button to initiate the wash cycle. After the cycle comes to an end, the Storage function will be running for 96 hours, and the dishwasher will automatically enter a 72-hour low-frequency ventilation mode. The Storage light on the display will stay on. If the dishwasher is not used for an extended period, move the utensils to a dry cupboard.

Press and hold Storage for 3 seconds to independently activate this mode. The screen will display a countdown of 60 minutes, during this period, utensils will be quickly rinsed and dried (without the need for detergent). After the cycle countdown, the dishwasher will automatically enter the Storage phase, and the Storage light on the display will stay on.

Note: This function is suitable for scenarios such as "quickly wash and dry clean dishes that have been kept for an extended period."

5. Manual drain function: Press the Power button , and within 5 seconds, press it again to start the drain pump for drainage.

■ Performance indicators of cycles

Performance parameters of standard cycles

Cycle	Applicable tableware	Wash time /min	Recommended amount of detergent/g	Water consumption/gal	Maximum wash temperature/°F	Drying time /min
Quick (速净洗)	Breakfast plates, preparation dishes, and other slightly soiled tableware	60	23	5.02	149	20
Normal (日常洗)	Moderately soiled tableware	150	27	5.02	149	30
Intensive (超净洗)	Heavily soiled tableware	130	33	6.08	167	20
Glass (晶亮洗)	Thin wine glass, goblets, and other delicate vessels	90	23	5.02	140	15
Auto (智能洗)	The wash cycle is subject to the dirtiness of tableware.	95-160	33	5.02-6.08	167	40
ECO (节能洗)	Water-saving and power-saving mode for moderately soiled tableware	255	33	2.91	113	40

Note: 1. The above are standard cycle data. After an additional cycle is configured, the cleaning data will vary depending on the cycle chosen.
2. The actual wash time, water consumption, and wash temperature will vary slightly with the water temperature, water pressure, and room temperature in different regions, as well as the type and quantity of tableware.
3. The above data were measured in the FOTILE Laboratory.

V.Cleaning Maintenance and Servicing

■ Daily cleaning

1. Open the door and clean the residual dirt on the door;
2. Clean the inner chamber walls, corners, and partition assemblies, and add a suitable amount of detergent;
3. Screw off the residue basket counterclockwise, dump the residues, and clean the basket;
4. Screw off the spray arms and clean them;
5. Take out the filter mesh and clean it;
6. Clean the bottom of the cavity;
7. Install all parts in their original positions after cleaning, and check if they are in place.

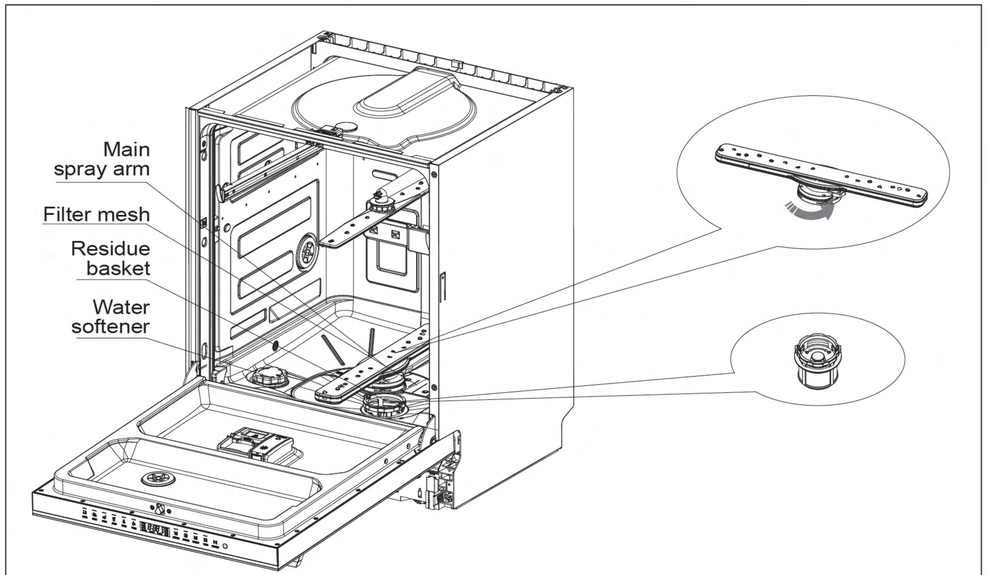

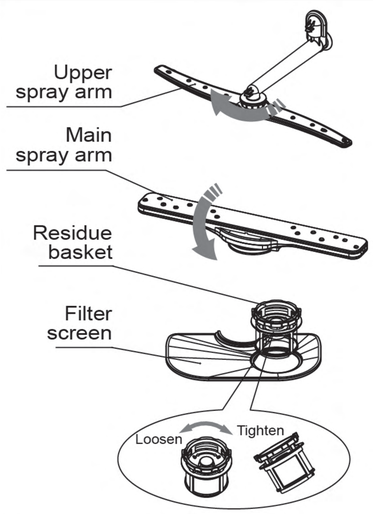

1. Dismantle & wash upper spray arm: hold the fixing nut of the upper spray arm and rotate it clockwise. After the nut is screwed off, pull down and remove the upper spray arm for cleaning.
2. Dismantle & wash the main spray arm: hold the two gray locking tab protrusions under the spray arm, and rotate counterclockwise to remove the spray arm for cleaning.
3. Unscrew the residue basket, take out the filter screen, remove residues, and then rinse the filter screen with water.
4. Reinstall the filter screen, the residue basket, the upper spray arm, and the main spray arm in the reverse order. Toggle the spray arms after installation to check whether they can be rotated smoothly without making any abnormal noise.

■ Recommendations on servicing of dishwasher

1. Clean the panel and door glass manually with hot water and a small amount of detergent. Wipe them with a sponge cloth and dry them with a soft cloth after cleaning. Do not rub them with a scouring pad or metal wire articles to avoid scratching the surface.
2. Apply a layer of oil to the liner for protection if the dishwasher is not used for an extended period.
3. Use neutral detergent to clean the liner and inner door, and clean both of them thoroughly with clean water. Clean them gently, avoid using a steel brush or rough brush, and dry them with a sponge or cloth after cleaning.
4. Do not place lemons, sauces, pickles, mustard, or other salty or corrosive food on the inner parts such as the liner and inner door for a long time to prevent corrosion.
5. Try to avoid long term contact between the liner/ inner door and powerful bleaching powder, household chemicals, and soap.
6. Try to prevent sharp and hard utensils such as knives, forks, and cookware from hitting the liner and the inner door. Push the dish rack into the cavity till it is in place to prevent scratching, scuffing, or denting the surface.
7. Do not put low-carbon steel or cast-iron cookware in the liner for a long time, and do not leave stainless steel scrubber, rubber dishwashing sheets, damp dishwashing sponges, or other cleaning pads in the liner to avoid the formation of surface rust and mildew spots over time.
8. If any surface rust or mildew spots are found on the liner, apply five-in-one cleansing powder or toothpaste to the rust and spots, and then clean them with a rag. Do not clean the liner with steel wool, polishing sheets, or polishing materials.
9. When scale forms in the liner due to lack of softener salt, promptly add softener salt and put a dishwasher tablet or a small amount of sodium citrate in the dishwasher liner. Initiate any complete cycle before running a Quick Cycle.

VI.Identification and Handling of Common Faults

■ Common faults

If you find anything unusual during use, please stop using the dishwasher, cut off the power supply, and check the following items:

Fault	Possible cause	Troubleshooting method
Abnormal sound	A spray arm is not installed in place or collides with other objects.	Disassemble, assemble, and check the spray arm. Manually rotate the spray arm to ensure that it can revolve without any interference.
	Tableware is not arranged as specified, resulting in tableware collisions.	Check whether the tableware arrangement is satisfactory.
The display is unresponsive, and the buttons are not working.	Power is not connected.	Check whether the power plug is properly plugged in.
White scale is found on the liner.	The softener salt is insufficient or the softening system is set too low.	Clean the scale with dishwasher tablets or sodium citrate, and timely add salt or set a higher softening gear.

If the dishwasher still does not work properly after troubleshooting, please call the FOTILE service hotline.

■ Fault codes and solutions

Displayed code	Displayed fault	Possible cause	Solution
E2	Small water flow	1. The water valve in the customer's home is not open. 2. The water flow in the customer's home is too small. 3. The inlet valve is broken and not opened. 4. The filter screen at the inlet valve is blocked. 5. Parts relating to water inflow are damaged.	1. Check the water valve to make sure it is open. 2. Check whether the water supply is interrupted or the water pressure is too low. 3. Ask a repair man for repair.
E3	Poor drainage	1. There are excessive residues in the residue basket and the drain hole is blocked. 2.The sewer line is blocked.	1. Clean the residue basket and sewer line. 2. Ask a repair man for repair
E5	The temperature sensor is short-circuited or open-circuited.	The temperature sensor is not working properly.	Ask a repair man for repair
E8	Dry burn protection	1. Poor sealing of the drain valve results in water leakage. 2. Poor sealing of the door results in water overflow.	1. Close the door and make sure the door is closed tightly. 2. Check whether the tableware is properly arranged. Ensure that no tableware is placed with the opening facing upward. 3. Ask a repair man for repair
E0	Motor communication fault	The motor is faulty.	Ask a repair man for repair
EC	Communication error	The communication line is disconnected.	Ask a repair man for repair
F1	Water leakage alarm	Water leakage protection	Ask a repair man for repair
F3	Water overflow alarm	Inlet valve is broken.	Ask a repair man for repair
F4	High-temperature alarm	The water temperature exceeds 85°C.	Ask a repair man for repair
F5	Motor overvoltage or undervoltage	Voltage is too high or too low.	Ask a repair man for repair
F6	Motor phase loss	There is a short circuit or open circuit inside the coil.	Ask a repair man for repair
F7	Overcurrent of motor software Overcurrent of motor hardware Motor stalling	Motor current is excessive.	Ask a repair man for repair

Code de défaillance et solutions	Défaillance affichée	Causes possibles	Solution
F5	Surtension ou sous-tension du moteur	Tension trop élevée ou trop basse	Demandez à une personne d'entretien pour procéder à la réparation
F6	Manque de phase du moteur	Court-circuit ou circuit ouvert interne de la bobine	Demandez à une personne d'entretien pour procéder à la réparation
F7	Surintensité logicielle du moteur Surintensité matérielle du moteur Le moteur fonctionne à rotor bloqué	Le courant du moteur dépasse le critère	Demandez à une personne d'entretien pour procéder à la réparation
Le témoin de manque de sel s'allume	Message de manque de sel	Manque de sel d'adoucissement	1. Ajoutez du sel adoucissant conformément aux instructions 2. Demandez à une personne d'entretien pour procéder à la réparation
Le témoin de manque de produit de rinçage s'allume	Manque de produit de rinçage	1. Manque de produit de rinçage 2. Distributeur endommagé	1. Ajoutez du produit de rinçage conformément aux instructions 2. Demandez à une personne d'entretien pour procéder à la réparation

⚠ **AVERTISSEMENT: Si le lave-vaisselle ne fonctionne toujours pas correctement après le dépannage simple ci-dessus, veuillez appeler le service d'assistance téléphonique FOTILE.**
Pour garantir la sécurité et la bonne utilisation, ce produit doit être entretenu par des professionnels. Si le produit ne fonctionne pas normalement parce que la réparation a été confiée à un personnel non-professionnel, il n'est pas non plus couvert par la réparation gratuite même pendant la période de garantie, et FOTILE n'assumera aucune responsabilité pour les pertes matérielles et les blessures corporelles qui en découlent.



FOTILE
A BREATH OF FRESH ENGINEERING®

洗碗机

BD2B-G2-Y

使用保养与说明 ENGLISH/ESPAÑOL/FRANÇAIS/中文

尊敬的用户，您好!

感谢您选购方太公司为您精心制造的方太系列产品。
使用和安装前，请您务必认真阅读此说明书相应内容并遵从要求操作.这对于维持产品的良好工作状况十分重要，也有助于您获得满意的下厨体验。
我们建议您，任何时候如有需要维修或服务时，请与方太公司服务中心联系，以便我们能及时为您服务。

方太厨电，全球厨房的幸福选择!

CONTENTS

目 录

一、安全注意事项 ---------- 2

二、产品信息 ---------- 5

三、操作说明 ---------- 8

四、洗涤程序操作介绍 ----------13

五、清洁维护和保养 ----------14

六、常见故障的识别与处理 ----------16

一、安全注意事项

■ 重要安全说明

⚠ 警告 – 使用洗碗机时，请遵循以下基本预防措施：

a) 使用洗碗机前，请阅读所有说明。

b) 只能将洗碗机用于其预期功能。

c) 只使用推荐在洗碗机中使用的洗涤剂或润湿剂，并将其放在儿童接触不到的地方。

d) 装入要清洗的物品时：

1) 放好尖锐物品，使其不太可能损坏门封；

2) 将锋利刀具的手柄向上放置，以减少割伤的风险。

e) 除非塑料制品上标有“洗碗机安全”或同等标志，否则不要清洗塑料制品。对于没有这样标记的塑料物品，请查看制造商的建议。

注：对于使用加热元件的电器，如果加热元件被放置或保护，使得熔化的塑料物品不太可能接触到加热元件，则可以省略此陈述。

f) 使用过程中或使用后不要立即接触加热元件。

g) 除非所有外壳面板都已正确安装到位，否则请勿操作洗碗机。

h) 请勿篡改控件。

i) 请勿滥用、坐在或站在洗碗机的门或碗架上。

j) 为了减少受伤的风险，请不要让孩子在洗碗机里或在洗碗机上玩耍。

k) 在某些条件下，氢气可能会在两周或更长时间未使用的热水系统中产生。氢气具有爆炸性。如果热水系统已经有一段时间没有使用，在使用洗碗机之前，打开所有热水水龙头，让水从每个水龙头流出几分钟。这将释放任何积聚的氢气。由于气体易燃，在此期间请勿吸烟或使用明火。

l) 当旧洗碗机停止使用或丢弃时，请拆下洗碗机的门。

■ 根据危害、损害程度进行的内容区分

⚠ **危 险**	若忽视这一标志，并进行错误操作，易导致人员危险，重伤或引起火灾。
⚠ **警 告**	若忽视这一标志，并进行错误操作，有可能导致人员危险，重伤或引起火灾。
⚠ **注 意**	若忽视这一标志，并进行错误操作，有可能导致人员受伤或造成物品损害。
建 议	为了安全、正确地进行使用，希望予以了解的内容。

■ 注意、禁止内容的图标



＊特别说明：请严格按照本说明书规定使用，由于本产品不当使用造成的任何财产损失、人身损害，本公司不承担责任。

本说明书各项规定若有与国家法律强制性规定相冲突之处，请以法律规定为准。

接地说明

本产品必须接地。在故障或失效情况下，接地为电流提供了一条电阻最小的路径，从而降低触电风险。本产品配备了一条带有接地导线的电源线，并配有接地插头。插头必须插入适当的插座，插座应按照所有当地规范和条例进行安装和接地。

警告 – 设备接地导线连接不正确将会导致触电风险。如果您对本产品是否正确接地存有疑问，请向有资质的电工或维修人员咨询。请勿改动产品出厂时提供的插头。如果插头与插座不匹配，请有资质的电工安装一个可匹配的插座。

⚠ 危 险

禁 止 — 严禁电源插头、接插件等电器部件沾水，如果沾水使用可能会导致触电或其它意外伤害。	禁 止 — 请不要对电源线进行改制、拉伸、结扣及施加重物挤压等。否则易导致电源线破损而发生触电和火灾等事故。
禁 止 — 请不要让儿童单独使用或靠近产品底部，否则有可能会导致触电或其它意外伤害。	禁止用潮湿的手操作 — 请不要用潮湿的手触摸电源插头，电器部件，否则易发生触电事故。
小心触电 — 在提供安装和维修服务之前，必须切断电源，以免触电。	禁 止 — 禁止使用酒精等易燃溶剂清洗内胆。
严格执行 — 移动或拆装产品时要注意箱体边角，须做好防护，以免割伤。	小心烫伤 — 机器运行过程中打开门体时，请注意安全，可能会有热水溅出导致烫伤。
需要接地 — 插座必须具有可靠的接地线，以确保安全。不得将接地线接于煤气管、自来水管、避雷针及电话线上。接地不良可能引起触电及其它意外事故。	

⚠ 警 告

禁 止 — 请不要使用松动或接触不良的电源插座。否则导致触电、短路、起火。	禁止拆卸 — 非专业人员不得擅自拆机维修或更换零件。
禁 止 — 洗碗机仅限在餐具摆放和取出时短暂打开，以免因绊倒造成受伤。	禁 止 — 清洗餐具时，禁止放入洗洁精和泡沫类洗涤剂。
禁 止 — 请勿将刀具的刃口直接接触碗篮。	禁 止 — 非使用时刻，请勿始终保持开门状态，这可能会导致倾翻风险，因为这可能会导致器具翻倒危险。
禁 止 — 请勿攀坐或站立在开启的机器门上。	禁 止 — 不要直接将水倒入洗碗机内，可能会导致产品无法正常工作。
禁 止 — 不要用粗糙擦洗剂或锋利的金属刮刀清洁玻璃，会擦伤玻璃表面，从而导致玻璃破碎。	严格执行 — 如果出现任何故障请立即断电停止使用，并按照“常见故障识别与处理”进行相应处理。

⚠ 警 告

严格执行 日常清理维护前请对机器断电。	严格执行 如果产品使用中发生漏水，请停止使用并立即与厂家联系。
小心烫伤 不要在产品运行时触摸加热装置，可能会导致烫伤。	严格执行 刀和其他锋利的用具必须装在碗架里，并且尖端朝下或水平放置。
严格执行 请不要让儿童和行动不便者自己使用，更不要放在幼儿可以触及到的地方使用，否则可能导致烫伤、触电和其它意外伤害。	严格执行 请勿让儿童玩耍塑料薄膜和包装箱，这可能会产生窒息事故，所以请让包装材料远离儿童，包装材料不是玩具。
严格执行 为了降低触电、火灾或人身伤害的风险，安装人员必须确保洗碗机在安装时是完全封闭的。	严格执行 洗碗机安装后，如不能触及电源插头，则应由符合布线规定的固定布线的开关完成，以满足维修或突发事件时，通过此开关切断电源。
严格执行 工作完毕后,开门有热气喷出,人应站在离门稍远处,以免被热气烫伤。	严格执行 器具应使用新的软管组件连接到水源，旧的软管组件不应重复使用。

⚠ 注 意

严格执行 产品在使用期间会发热，注意避免接触产品的发热元器件及周边位置。	禁 止 请不要使用多个插头的多功能插座。
严格执行 整机远离热源、煤气和酒精等易燃品。	严格执行 保证下水管道畅通，管道堵塞可能导致产品无法正常工作。
严格执行 若打开包装发现内胆有少量积水，为出厂合格测试所致，并非机器自身故障导致。	严格执行 请让儿童远离洗涤剂和漂洗剂。这些洗涤剂可能会造成口腔、喉咙以及眼睛灼伤或窒息。
严格执行 请让儿童远离开着门的洗碗机。洗碗机中可能有被儿童误吞的小零件，机内的水非饮用水，可能还有残留的洗涤剂。	严格执行 清洗的餐具内尽量不要有大块的残渣（如骨头），以免干扰喷淋臂旋转，影响机器正常使用和清洗效果。
严格执行 请勿将带大量泥沙的清洗物放置产品中，可能会导致产品无法正常工作。	严格执行 请勿安装在可能会冻结的地方（0℃以下的地方）。
严格执行 机器运行时请确保碗架安装到位。	禁 止 请勿拉扯、拆解机器顶部的连接线。
严格执行 如果电源软线损坏，为了避免危险，必须由制造商、维修部或类似部门的专业人员更换。	

建 议

严格执行 每次洗涤结束后，渣篮中的食物残渣请及时清理。	禁 止 放置餐具时，不要让高脚杯等易碎物品触碰其他餐具。
严格执行 清洗餐具前，建议加入专用洗碗粉。	严格执行 请预先对餐具进行预清理，处理大块的食物残渣后，再放入洗碗机进行洗涤。
严格执行 若餐具上有手洗甚至钢丝球也很难清洗的污渍，直接放入则无法清洗干净，建议对污渍进行预处理，再放入洗碗机进行清洗。	

提示：本产品可能会使您暴露于化学物质，加利福尼亚州已知该化学物质可致癌和出生缺陷或其它生殖危害.如需了解更多信息，请访问：www.P65Warnings.ca.gov

二、产品信息

■ 各部件名称

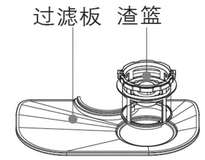

过滤网板组件

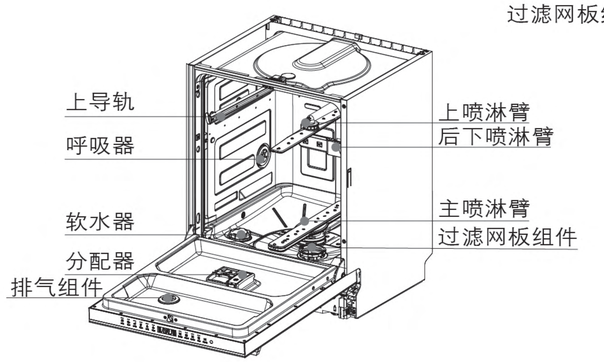

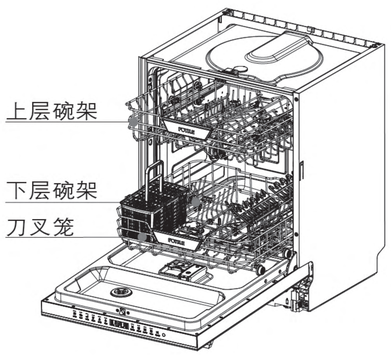

■ 主要技术参数

型号			BD2B-G2-Y
认证			ETL, DOE, TSCA
尺寸	产品尺寸(in/mm)	宽度	23 9/16"(598mm)
		深度(不含把手)	22 1/2"(570mm)
		深度(含把手)	24 1/8"(611.5mm)
		深度(门体打开90°)	44 1/8"(1120mm)
		高度(可调节)	33 7/8 - 35 1/16"(860-890mm)
	开口尺寸(in/mm)	宽度	≥23 5/8"(600mm)
		深度	≥22 11/16"(575mm)
		高度	34 1/16-35 1/4"(865-895mm)
	重量(lbs/kg)	净重	92.4lbs(41.9kg)
		总重	107.8lbs(48.9kg)
技术参数		电压	120V
		频率	60Hz
		功率	1500 W
		电源线	5ft with plug
		水压(psi/Mpa)	20.3-145psi/0.14-1MPa
		水耗 – 正常程序	3.4 Gallons
		能耗	285 kWh/year
		噪音(声功率)	56 dBA
设计信息	碗篮	三层碗架	否
		碗架数量	2
	材料	门体	雾面磨砂钢化玻璃
		把手材质	铝合金
		腔体	不锈钢
	控制方式		顶部隐藏式触摸控制
	把手类型		拉杆式把手
	喷淋臂数量		4
	餐具摆放数量(套数)		12套
	可调节齿		是
	可调碗架		否
	洗涤剂和漂洗剂分配器		有
功能特点	洗涤程序		晶亮洗，速净洗，日常洗，超净洗，节能洗，智能洗
	最高洗涤温度		75℃/167°F
	选项	储存	是，洁净干燥储存长达96小时
		自清洁	是
		加强烘干	是
		下层速洗	是
	防指纹表面处理		是
	变频直驱电机		是
	隐藏式加热器		是
	脏污传感器		是
	风机辅助干燥系统		是
功能特点	防漏检测		是
	洗涤结束蜂鸣声		是
	内部照明		是
	工作指示灯		是
	高压射流(HydroJet™)技术		是
	净化排水系统 Pur-Drainage™ System		是 无脏水残留，无臭味

■ 控制面板



功 能 描 述

Glass
晶亮洗程序，精致餐具和玻璃器皿专用程序。

Quick
速净洗程序，用于清洗早餐、备菜盘等轻油污餐具。

Normal
日常洗程序，70℃/158°F 70℃高温强力快速清洗多油餐具炊具，该程序建议用于日常、定期或典型用途，以完全清洗满载的正常脏污程度的餐具。

Intensive
超净洗程序，75℃/167°F高温强力清洗重油餐具炊具。

ECO
节能洗程序，低能耗慢洗，节水节电。

Auto
智能洗程序，自动感应餐具脏污程度，达到理想的清洗效果。

Storage
保洁存储程序，清洗结束后，在一段时间内保持餐具洁净干燥。

Self-Clean
自清洁程序，对洗碗机内腔进行清洁。

Extra Dry
加强烘干程序，通过延长烘干时间达到更好的烘干效果。

Half Load
下层速洗程序，对下层碗架中的餐具进行快速清洗。

软化盐显示灯，当此灯亮起时，需要添加洗碗机专用软化盐。

漂洗剂显示灯，当此灯亮起时，需要添加漂洗剂。

功 能 描 述			
⏻	开关键，控制电源的开启和关闭。	▷|| Start/Pause	开始/暂停键，控制产品的开始和暂停。

注： 1. 开始/暂停键 ▷|| 仅可控制产品开始，需要使机器暂停时直接打开门体即可，开门时注意可能有热水喷溅。
2. 使用下层速洗功能时仅对下层碗架进行清洗，如上层碗架有脏污餐具，不建议使用此功能。

三、操作说明

■ 初始设置

● 您可以先咨询当地自来水公司，确认您所在区域的水硬度，从而对照下表确定洗碗机需设置的软化档位。

°dH	°fH	°eH	mmol/L	gr/gal	推荐设置
0-6.2	0-11	0-7.7	0-1.1	0-6.4	H0
6.2-8.4	11~15	7.7-10.5	1.1-1.5	6.4-8.8	H1
8.4-11.2	15-20	10.5-14	1.5-2.0	8.8-11.7	H2
11.2-14	20-25	14-17.6	2.0-2.5	11.7-14.6	H3
14-16.8	25-30	17.6-21.1	2.5-3.0	14.6-17.5	H4
16.8-22.4	30-40	21.1-28.1	3.0-4.0	17.5-23.4	H5
22.4-28.1	40-50	28.1-35.1	4.0-5.0	23.4-29.2	H6
≥28.1	≥50	≥35.1	≥5.0	≥29.2	H7

● 设定软化系统
1. 洗碗机在通电关机状态下长按开始/暂停键5秒，此时显示屏显示出厂前预设值；
2. 继续按压开始/暂停键，设定值将跳一级，跳到 H7 之后会跳回 H0；（数字越大代表软化能力越强，应对越高硬度水质，耗盐越快）
3. 长按电源键关机或者5秒不进行操作，洗碗机将记忆当前设定值。



● 添加软化盐（请使用洗碗机专用软化盐）

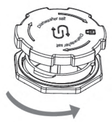
旋开软水器上盖

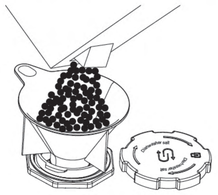
填充500g软化盐
(禁止填充洗涤剂！)

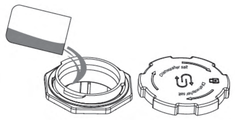
在软化盐仓内加满水，并充分搅拌，小心操作尽量避免盐水溢出

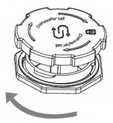
把软水器上盖旋紧即添加完成

注： 1. 添加完毕软化盐后，建议运行一次自清洁程序，以免溢出的盐水腐蚀内胆。
2. 洗碗机专用软化盐在水中溶解需要一段时间，加完软化盐之后，缺盐 ⥁ 指示灯不会立刻熄灭，不影响洗碗机正常使用。
3. 只有在第一次添加软化盐时需要将水倒入软化盐仓中。

● 设定漂洗剂用量
1. 洗碗机在通电关机状态下长按保洁存储键5秒，此时显示屏显示出厂前预设值；
2. 继续按压保洁存储键，设定值将跳一级，跳到 6之后会跳回 0；（数字越大漂洗剂单次投放量越高，消耗越快，同时也越有利于干燥）
3. 长按电源键关机或者5秒不进行操作，洗碗机将记忆当前设定值。



■ 投放漂洗剂和洗碗粉，分配器款式以实物为准

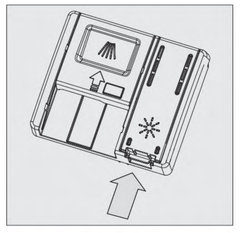
打开漂洗剂腔体上盖

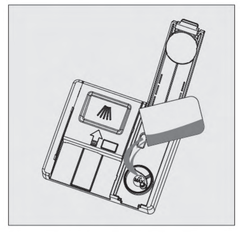
加满漂洗剂

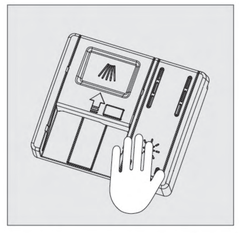
把盖子关上，听到咔嚓声即可

注： 添加完毕漂洗剂后，如有漂洗剂溢出，请运行一次速净洗程序。

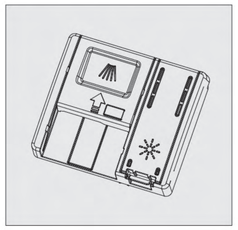

按压橙色按钮打开盖子

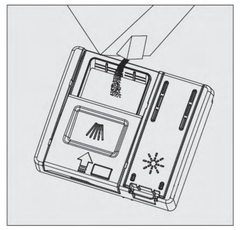

洗碗粉/洗碗块倒入
干燥的洗涤剂仓

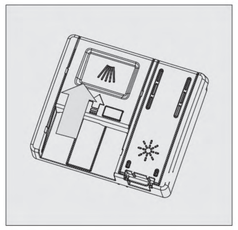

把盖子推入并压紧

■ 碗架摆放图解

● 日常餐具摆放

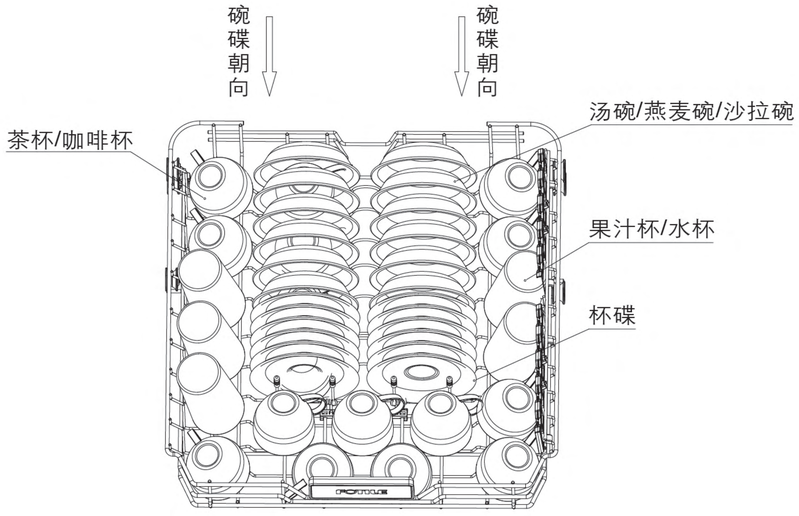

上层碗架

摆放说明及注意事项：

1. 餐具清洗前请进行预处理，去除大块残渣；
2. 餐具请勿碗口向上放置，可能影响机器的正常运行及洗涤效果；
3. 脏污特别严重的餐具建议放在下层碗架，可以有效提高洗净效果；
4. 餐具放置后，避免餐具堆叠在一起，以免影响清洗效果；餐具较少时，间隔放置餐具有助于更好的清洗；
5. 餐具放置后，请确保勺子、刀叉等餐具不会影响上下两个喷淋臂的旋转；
6. 餐具摆放时，请注意各类餐具的摆放方向，以达到更好的洗净效果。

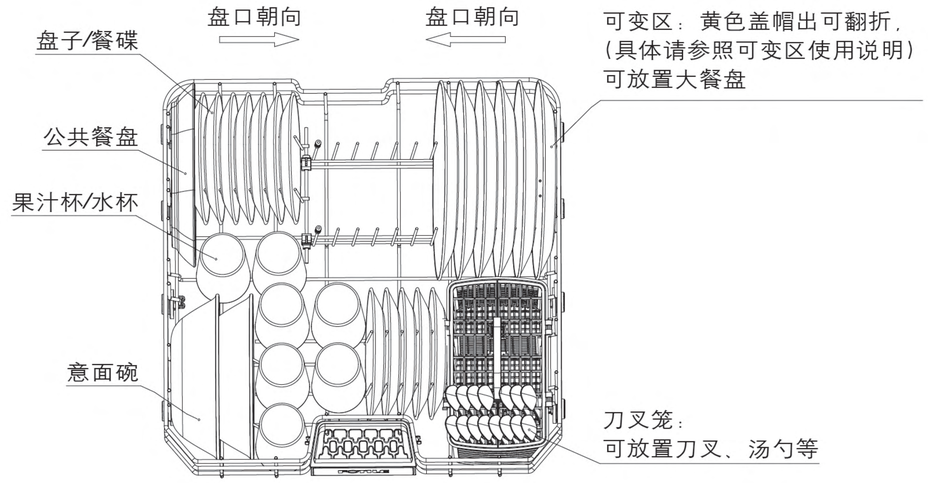

下层碗架

● 可变区使用说明

上层碗架可变区：中间支架下翻，可放置马克杯玻璃杯甜点碗等

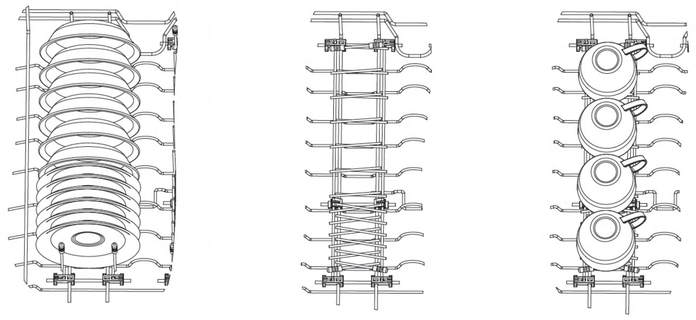

上层碗架可变区：右边杯托下翻，可放置红酒杯

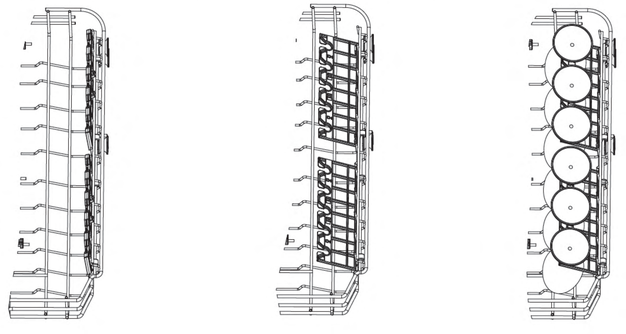

下层碗架可变区：中间支架下翻，可放置锅具等大号餐具

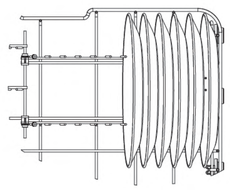
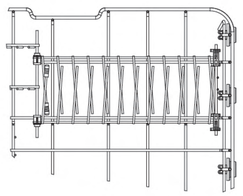
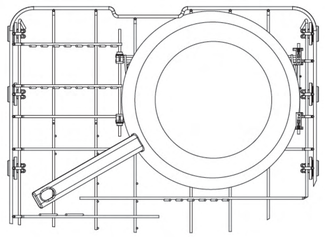

● 测试餐具摆放

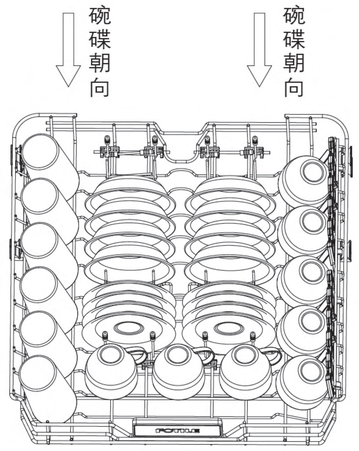

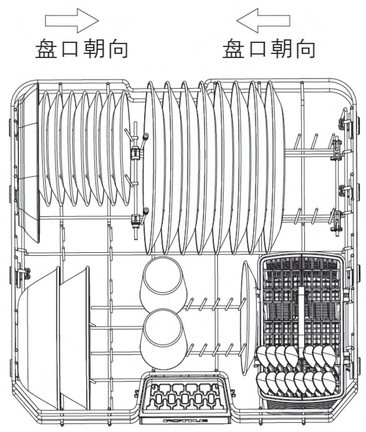

上层碗架　　下层碗架

注意餐具类型

餐具及材料	是否可清洗	餐具及材料	是否可清洗
铝	否	不锈钢	是
瓶子和罐子	是 需确保没有标签，否则标签脱落可能堵塞喷淋臂	纯银	是
铸铁	否 会生锈	锡	否 会腐蚀生锈
陶瓷	是 骨瓷及表面花纹易脱落器具除外	木质象牙类	否 未经处理的木质会产生扭曲、裂纹
水晶	是		
金	否 会变色	空心手柄刀具	否 刀具里的粘合剂在高温水的作用下会松脱
玻璃	是		
塑料	是 请确保塑料制品满足可机洗的温度要求	铜、青铜	否 在高温水和洗涤剂作用下会变形和变色

注：请确保清洗餐具所能承受温度差在洗涤程序规定温度范围内；

四、洗涤程序操作介绍

■ 操作步骤介绍

1. 打开洗碗机门体，放置好洗碗粉或洗碗块，按开关键 ⏻，开启洗碗机；
2. 点击所需运行的程序按键，如Normal(日常洗)；
3. 如有需要，点击相应附加功能键选择附加程序(如加强烘干)；
4. 点击Start/Pause(开始/暂停) ▷‖，请在4S内关闭洗碗机门体，开始运行清洗程序，此时正面呼吸灯‘O’呈缓慢呼吸状态。
5. 若点击Start/Pause(开始/暂停)，超过4秒未关门，请再次点击Start/Pause(开始/暂停)，并在4S内关闭洗碗机门体，即可开始运行清洗程序。



注：1. 在清洗过程中，如需补加餐具，请直接打开门体添加餐具，机器自动暂停，此时注意热水喷溅，摆放餐具若超过4S，关门前，请先点击“Start/Pause”按键，并在4S内关门，即可听到短鸣声，机器继续运行洗碗机。
2. 清洗开始后，如想切换清洗程序，请先长按电源键关闭机器，再开机即可重新选择其他程序。
3. 清洗开始后，请勿刻意去切换清洗程序，因为此时添加的洗涤剂已经被消耗，切换程序后需重新添加洗涤剂。

■ 程序说明

1. Quick(速净洗)、Glass(晶亮洗)、Normal(日常洗)、Intensive(超净洗)、ECO(节能洗)、Auto(智能洗) 为主程序，
   Extra Dry(加强烘干)、Storage(保洁存储)、Half Load(下层速洗)、为附加程序，
   Self Clean(自清洁) 为增值程序，自清洁程序建议配合洗机片使用，效果更佳；
2. ECO(节能洗)，仅可附加保洁存储功能；
3. 点击Half Load(下层速洗)，可快速洗涤下层碗架。

4. Storage(保洁存储)：如需在清洗结束后运行保洁存储功能，请在选择主程序之后点击“Storage(保洁存储)”，按下“Start/Pause(开始/暂停)”键，启动清洗程序，在程序结束后会运行该功能，持续时间为96小时；程序结束后，将自动进入72h低频换气模式，该过程显示屏“Storage(保洁存储)”指示灯常亮。如长时间不用洗碗机，请将餐具转移到干燥的碗柜中。
长按Storage(保洁存储)3秒可单独打开此模式，此时屏幕倒计时显示为60分钟，此时会进行快速冲洗和烘干(无需添加洗涤剂)程序倒计时结束后自动进入保洁存储阶段，此时显示屏“Storage(保洁存储)”指示灯常亮。
注：此功能可适用场景如“对经过长期静置的干净餐具进行快速清洗和烘干”。

5. 手动排水功能：按 ⏻ 开机，在5秒内，再按 ⏻ 关机，即可打开排水泵排水。

■ 各程序性能指标

标准程序性能参数

程序	适用餐具	洗涤时间 /min	建议洗涤剂用量/g	耗水量 /gal	最高洗碗温度/°F	干燥时间 /min
Quick (速净洗)	早餐盘、备菜盘等轻油污餐具	60	23	5.02	149	20
Normal (日常洗)	一般脏污的餐具	150	27	5.02	149	30
Intensive (超净洗)	严重脏污的餐具	130	33	6.08	167	20
Glass (晶亮洗)	薄酒杯、高脚杯等精致器皿	90	23	5.02	140	15
Auto (智能洗)	可根据餐具脏污程度调整清洗程序	95-160	33	5.02-6.08	167	40
ECO (节能洗)	一般脏污的餐具，节水节电	255	33	2.91	113	40

注：1. 以上为标准程序数据，附加程序后，清洗数据会随程序不同而有差异。
2. 实际洗涤时间、耗水量、洗碗温度会因各地水温、水压、室温以及餐具类型和数量而略有差异。
3. 以上数据在方太实验室条件下测定。

五、清洁维护和保养

■ 日常清理

1. 打开门体，清洁门体上残留的污垢；
2. 清洗内腔四壁、壁角和隔板组件，可以适当加入洗涤剂；
3. 逆时针旋转移除渣篮，倾倒残渣并清洗；
4. 旋转移除喷淋臂并清洗；
5. 拿下过滤网板并清洗；
6. 清洗内腔底部；
7. 清洗完毕后请将各零件按原位置安装，并检查是否安装到位。

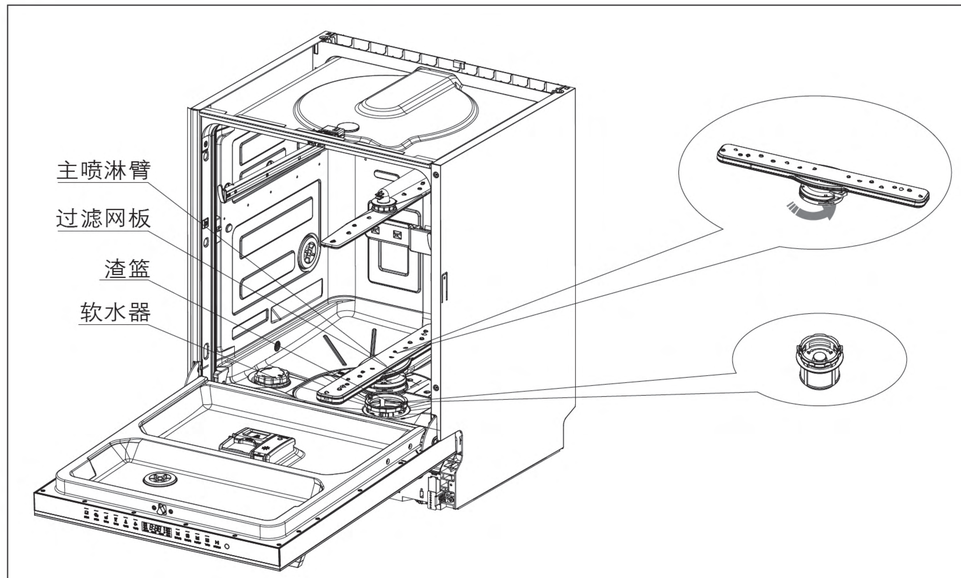

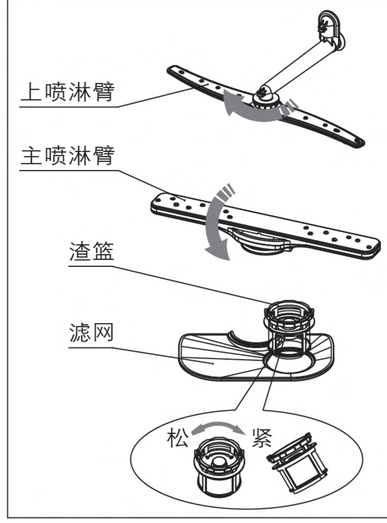

1. 拆&洗上喷淋臂：捏住上喷淋臂固定螺母，顺时针旋转，待完全旋出即可向下取出上喷淋臂进行清洗。
2. 拆&洗主喷淋臂：捏住喷淋臂下方两个灰色的卡扣凸块，逆时针旋转，即可拆下喷淋臂进行清洗。
3. 旋开渣篮，并取出过滤网，进行清除残留物，然后用水将过滤网冲洗干净。
4. 依据相反顺序重新安装过滤网、渣篮、上喷淋臂，主喷淋臂，安装完成后拨动喷淋臂，能顺畅旋转且无异响即可。

■ 洗碗机保养建议

1. 清洁面板和门体玻璃，用热水和少量清洗剂手动清洗，可用海绵布拭抹，清洁后用软布抹干。请勿使用百洁布、金属丝状物摩擦，以免刮伤表面。
2. 如长期不使用洗碗机，可在内胆涂一层油，以保护内胆。
3. 清洗内胆、内门请使用中性的洁净剂，并用清水完全清洁干净。清洁过程要轻柔，避免用钢刷或粗糙的刷子，洗净后用海绵或抹布擦干。
4. 不要把柠檬、酱汁、泡菜、芥末或其余富含盐分的、或带侵蚀性的食物长时间置于内胆、内门等内部部件上，以防止腐蚀。
5. 尽量避免内胆、内门与强力漂白粉、家用化学品和肥皂长期的接触。
6. 尽量避免刀叉、炊具等尖锐坚硬的器皿撞击内胆及内门，请将碗架往腔体内推到位，以防止刮花、划伤或碰凹外观。

7. 不要把低碳钢或铸铁炊具长期摆放于内胆中，也不要把钢丝球、橡胶洗碗片，湿润的洗碗海绵或其余清洁垫遗置于内胆中，避免长此以往形成“浮锈”、“霉斑”等。
8. 若内胆出现“浮锈”、“霉斑”等，可用五洁粉或牙膏涂在锈迹和斑点处，用抹布擦洗干净即可，不要用百洁丝、打磨片或打磨材料来清洁内胆。
9. 当因缺少软化盐导致内胆产生水垢时，请及时添加软化盐，并在洗碗机内胆中放入洗机片或少量柠檬酸钠，运行任一完整程序后再运行一次速净洗即可。

六、常见故障的识别与处理

■ 常见故障

如果您在使用中发现异常状况，请停止使用，断开机器电源，检查以下内容：

故障现象	可能原因	检修方法
有异响	喷淋臂没有安装到位或与其他物体碰撞	重新拆装喷淋臂并检查，手动转动喷淋臂，确保喷淋臂能顺畅旋转且无干涉
	餐具没有按指定要求放置，导致餐具碰撞	检查餐具摆放是否符合摆放要求
显示屏不亮，按键无反应	未接通电源	检查电源插头是否插好
内胆出现白色水垢	缺软化盐或软化系统档位设置过低	用洗机片或柠檬酸钠对结垢处进行清洗，并及时加盐或调高软水档位

上述故障排除后，仍不能正常工作，请致电方太服务热线

■ 故障代码处理

显示代码	故障显示	可能原因	解决措施
E2	水流量小	1. 客户家里水源的水阀未开 2. 客户家里水流量太小 3. 进水阀坏，没打开 4. 进水阀处滤网堵塞 5.进水相关零部件损坏	1. 检查水阀，确保水阀处于打开状态 2. 检查是否停水或水压过小 3. 请专业维修人员上门维修
E3	排水不畅	1. 渣篮处残渣太多，排水孔堵塞 2. 下水管堵塞	1. 清洗渣篮和下水管道 2. 请专业维修人员上门维修
E5	温度传感器短路或开路	温度传感器异常	请专业维修人员上门维修
E8	干烧保护	1. 排水阀密封不良有漏水 2. 门密封不良有溢水	1. 关闭门，确保门关紧 2. 检查餐具是否摆放正确，确保无餐具碗口朝上放置 3. 请专业维修人员上门维修
E0	电机通信故障	电机故障	请专业维修人员上门维修

显示代码	故障显示	可能原因	解决措施
EC	通信异常	通信线断开	请专业维修人员上门维修
F1	漏水报警	漏水保护	请专业维修人员上门维修
F3	溢水报警	进水阀坏	请专业维修人员上门维修
F4	高温报警	水温超过85℃	请专业维修人员上门维修
F5	电机过压欠压	电压过高或过低	请专业维修人员上门维修
F6	电机缺相	线圈内部短路或开路	请专业维修人员上门维修
F7	电机软件过流 电机硬件过流 电机堵转	电机电流超标	请专业维修人员上门维修
缺盐灯亮	缺盐提示	缺少软化盐	1. 按照操作说明添加软化盐 2. 请专业维修人员上门维修
缺漂洗剂灯亮	缺漂洗剂	1. 缺少漂洗剂 2. 分配器损坏	1. 按照操作说明添加漂洗剂 2. 请专业维修人员上门维修

⚠警告：当上述简易故障排除后，洗碗机仍不能正常工作，请致电方太服务热线。

为保障安全和正确使用，本产品必须由专业人员进行维修。如因消费者委托非专业人员进行维修，而导致产品不能正常使用的。即使在保修期内，也不属于免费维修范围，由此而造成的财产损失，人身伤害本公司亦不承担任何责任。